Maine Department of Health and Human Services

Maine Center for Disease Control and Prevention
286 Water Street, 3rd Floor
11 State House Station
Augusta, ME 04333-0011

John Elias Baldacci
Governor

Brenda M. Harvey,
Commissioner

Dora Anne Mills, MD, MPH
Public Health Director
Maine CDC Director

July 27, 2007

FAST Systems/Smith & Loveless
Attn.: Alan Fleischer
12977 Maurer Industrial Drive
Sunset Hills, MO 63127-1515

Subject: Product Registration, FAST LX Series

Dear Mr. Fleischer:

The Division of Environmental Health has completed a review of a registration application for your company's product. This information was submitted pursuant to Section 1802 of the Maine State Plumbing Code, Subsurface Wastewater Disposal Rules (Rules), for code registration, for use in Maine.

Product Description

The FAST LX Series consists of L-1X, L-2X, L-3X, L-4X, L-5X, and L-6X models, which vary by treatment capacity. All units are fixed film extended aeration systems. They consist of one or two plastic tanks with integral air diffusers and external air pumps. Lift pumps can be installed as necessary. Although designed for marine use with chlorine disinfection, your company proposes them for use in onsite sewage disposal systems using fabric wrapped, gravel-less disposal pipes.

Claim

According to the information you provided, including a report dated 1977 and a current manufacturer's brochure, the FAST Systems/Smith & Loveless, Inc., FAST LX Series systems produce effluent with a combined BOD_5 and TSS less than 30 mg/l; the test results demonstrated BOD_5 and TSS levels less than 10 mg/l, each.

Determination

On the basis of the information, the Division has determined that the FAST LX Series is acceptable for use in the State of Maine, provided that it is installed, operated, and maintained in conformance with the manufacturer's directions. However, the Division recommends against disinfection, since that would not accommodate formation of a biomat in the disposal system.

In the event that the product fails to perform as claimed by the applicant, use of the product in Maine, including all installations approved pursuant to Chapter 18 of the Rules, shall cease. Use of the product shall not resume until the applicant and the Division have reached a mutually acceptable agreement for resolving the failure to perform as claimed.

Because installation and owner maintenance has a significant effect on the working order of onsite sewage disposal systems, including their components, the Division makes no representation or guarantee as to the efficiency and/or operation of FAST LX Series. Further, registration of this product for use in the State of Maine does not represent Division preference or recommendation for this product over similar or competing products.

This letter supersedes the letter dated 07/05/07. If you have any questions please feel free to contact me at (207) 287-5695.

Sincerely,

James A. Jacobsen

James A. Jacobsen, Environmental Specialist IV
Wastewater and Plumbing Control Program
Division of Health Engineering
e-mail: james.jacobsen@state.me.us

/jaj

xc: Product File

FAST® Systems, Smith & Loveless, Inc.

12977 Maurer Industrial Drive
Sunset Hills, MO 63127-1515
United States of America
Phone: (314) 645-6540
Fax: (314) 645-6131

James A. Jacobsen, Environmental Specialist IV
Wastewater and Plumbing Control Program
Division of Health Engineering
Email: james.jacobsen@state.me.us

Re: Product Registration, FAST LX-Series
Your letter July 5, 2007

Dear Mr. Jacobsen,

Thank you for your prompt reply to our application. It is appreciated.

There is terminology used in the subject letter that may be of no consequence. But, in the interests of accuracy and completeness, I would like to bring this to your attention.

The third paragraph refers to "...the Bio-Microbics FAST LX-Series systems..." Actually, the FAST LX-Series is a product of FAST Systems, Smith & Loveless, Inc.

Smith & Loveless and Bio-Microbics are both subsidiaries of RLR, Inc. and all parties work closely together. But, it would not be correct to refer to these units as products of Bio-Microbics, Inc.

Thank you and best regards,
Alan Fleischer

Maine Department of Health and Human Services

Maine Center for Disease Control and Prevention
286 Water Street, 3rd Floor
11 State House Station
Augusta, ME 04333-0011

John Elias Baldacci
Governor

Brenda M. Harvey,
Commissioner

Dora Anne Mills, MD, MPH
Public Health Director
Maine CDC Director

July 5, 2007

FAST Systems/Smith & Loveless
Attn.: Alan Fleischer
12977 Maurer Industrial Drive
Sunset Hills, MO 63127-1515

Subject: Product Registration, FAST LX Series

Dear Mr. Fleischer:

The Division of Environmental Health has completed a review of a registration application for your company's product. This information was submitted pursuant to Section 1802 of the Maine State Plumbing Code, Subsurface Wastewater Disposal Rules (Rules), for code registration, for use in Maine.

Product Description

The FAST LX Series consists of L-1X, L-2X, L-3X, L-4X, L-5X, and L-6X models, which vary by treatment capacity. All units are fixed film extended aeration systems. They consist of one or two plastic tanks with integral air diffusers and external air pumps. Lift pumps can be installed as necessary. Although designed for marine use with chlorine disinfection, your company proposes them for use in onsite sewage disposal systems using fabric wrapped, gravel-less disposal pipes.

Claim

According to the information you provided, including a report dated 1977 and a current manufacturer's brochure, the Bio-Microbics FAST LX Series systems produce effluent with a combined BOD_5 and TSS less than 30 mg/l; the test results demonstrated BOD_5 and TSS levels less than 10 mg/l, each.

Determination

On the basis of the information, the Division has determined that the FAST LX Series is acceptable for use in the State of Maine, provided that it is installed, operated, and maintained in conformance with the manufacturer's directions. However, the Division recommends against disinfection, since that would not accommodate formation of a biomat in the disposal system.

In the event that the product fails to perform as claimed by the applicant, use of the product in Maine, including all installations approved pursuant to Chapter 18 of the Rules, shall cease. Use of the product shall not resume until the applicant and the Division have reached a mutually acceptable agreement for resolving the failure to perform as claimed.

Because installation and owner maintenance has a significant effect on the working order of onsite sewage disposal systems, including their components, the Division makes no representation or guarantee as to the efficiency and/or operation of FAST LX Series. Further, registration of this product for use in the State of Maine does not represent Division preference or recommendation for this product over similar or competing products.

If you have any questions please feel free to contact me at (207) 287-5695.

Sincerely,

James A. Jacobsen, Environmental Specialist IV
Wastewater and Plumbing Control Program
Division of Health Engineering
e-mail: james.jacobsen@state.me.us

/jaj

xc: Product File

Maine Department of Health and Human Services
Bureau of Health
Division of Health Engineering
Wastewater and Plumbing Control Program

RECEIVED
JUN 28 2007
WASTEWATER & PLUMBING PROGRAM

APPLICATION FOR REGISTRATION OF EXPERIMENTAL SYSTEM/INNOVATIVE TECHNOLOGY OR ONSITE SEWAGE DISPOSAL SYSTEM PRODUCT

Please complete the following Sections. Please print or type.

Applicant

Company Name: FAST Systems, Smith & Loveless Inc.

Contact Person: Alan Fleischer

Address: 12977 Maurer Industrial Drive

Town/City: Sunset Hills State/Province: MO Zip Code: 63127-1515

Country: USA

Telephone: (314)645-6540 e-mail: afleischer@sciencofast.com

Product

Product Name: FAST LX-Series Sewage Treatment Systems

Models: L-1X, L-2X, L-3X, L-4X, L-5X, L-6X

Product Classification (choose one)

Primary or Secondary Treatment Unit

[ ] Septic Tank [ ] Extended Aerobic Treatment Unit [ ] Recirculating Aerobic Unit

[X] Aerobic Fixed Film Unit [ ] Other (specify) _____

Effluent Filter

[ ] Septic Tank Outlet Filter [ ] Post-Tank Filter [ ] Other (specify) _____

Disposal Device

[X] Gravel-less Disposal Pipe [ ] Gravel-less Disposal Bed [ ] Chamber, Plastic

[ ] Chamber, Other [ ] Other (specify) _____

Miscellaneous

[ ] Pipe [ ] Effluent Flow Distribution Device [ ] Other (specify) _____

Claim

Describe the product's features (attach additional sheets if necessary).

Compact, lightweight systems for small flows, see letter.

Describe the product's performance (attach additional sheets if necessary).

Secondary treatment of domestic sewage, see letter.

Has the product received National Sanitation Foundation or Canadian Standards Authority approval?

[ ] No [X] Yes (If "yes", enclose a copy of the certification.)

IMPORTANT NOTE!

Don't forget to enclose relevant product literature, engineering specifications, studies, and third party certifications with this application.

I, Alan Fleischer am the [X] applicant [ ] agent for the applicant of the subject product.
(print name)
I state that the information submitted is correct to the best of my knowledge and understand that any falsification is reason for the Department to deny registration for use of the product in Maine.

[X] Signature of Applicant
[ ] Signature of Agent for Applicant

6/20/2007
Date

SCIENCO/FAST®
Smith & Loveless Inc. Commercial Division

12977 Maurer Industrial Drive
Sunset Hills, MO 63127-1515, USA
Phone: (314) 645-6540
Fax: (314) 645-6131
E-Mail: solutions@sciencofast.com

RECEIVED
JUN 2 5 2007
PLUMBING PROGRAM

June 20, 2007

James A. Jacobsen, Environmental Specialist IV
Wastewater and Plumbing Control Program, Division of Health Engineering
Maine Center for Disease Control and Prevention
286 Water Street, 3rd Floor
11 State House Station,
Augusta, Me 04333-0011

Re: Application for Registration of Experimental System/Innovative Technology or Onsite Sewage Disposal System Product

Dear Mr. Jacobsen,

This letter will transmit and supplement the enclosed application. We hope that it contains the information you require.

GENERAL

FAST marine units are complete sewage treatment systems. They provide aerobic biological treatment for removal of BOD5 and TSS followed by disinfection prior to discharge.

FAST (Fixed Activated Sludge Treatment) is a submerged aerobic fixed film process with rigid media providing the site for microbial growth within one or more Media Tanks. Typical units include one or two such Media Tanks, a tablet chlorinator, chlorine contact tank, regenerative turbine blower and an effluent pump when required.

Although the process is capable of beneficial nitrification and is used for this purpose in many applications, nitrification is not a requirement of current marine regulations and it is my understanding that nitrification is not a requirement of the applications that interest J&R Engineering. Hence,

neither the nitrogen requirement nor the associated process performance is discussed here.

BACKGROUND

The prototype FAST system was installed aboard the river towboat M/V Missouri in 1969. It was an immediate success.

Two subsequent prototypes were installed aboard other vessels and were also successful. The units were offered for sale to customers beginning in 1973.

Since then, we have delivered over 2,000 FAST marine sewage systems for vessels ranging in size from harbor tugs to cruise ships and US Navy aircraft carriers. US Coast Guard regulations for sewage treatment were implemented under 33CFR159 in 1975.

FAST was the first such treatment system tested and certified. In 1978, extensive testing was conducted under the supervision of Environment Canada and US Coast Guard by NSF at their test site in Chelsea, MI and copies of the official test reports are enclosed.

PROCESS CHARACTERISTICS

FAST works particularly well in most marine applications because it works particularly well under variable loading conditions. The microbial population is variegated and comprises not only aerobes, but layers of facultive and anaerobic microorganisms layered under the aerobes on the media.

The result is a substantially higher sludge age than can be achieved with suspended growth processes and more consistent removal of applied organics.

Variable loading is a characteristic of marine applications. Populations are small and no space is available for flow equalization tanks.

Also, commercial vessel populations vary considerably over time. When a commercial vessel enters a port or a shipyard, a large percentage of the crew

leaves the ship until such time as regular operation resumes. By the same token, commercial vessels many times carry additional technical representatives, shipyard workers and other persons in addition to normal crew.

Unlike suspended growth systems, the only effect of light loading is to improve effluent quality. In the same vein, the process will withstand short period overloads without adversely affecting effluent quality.

In addition to sludge age, there are two keys to good performance under both light and heavy loading; (a) filamentous bacteria attach to the process media and do not carry over into a clarifier with resulting sludge bulking and flotation and (b) flow peaks do not "wash out" a clarifier because FAST does not require or employ a clarifier.

SPECIFIC FAST MODELS

This application is for the LX-Series of FAST units. These are lightweight and extremely compact for ease of installation aboard tugs and other smaller vessels where available space and access for installation are extremely limited.

They employ high density polyethylene (HDPE) salvage drums as tanks. The salvage drums provide substantial reductions in weight and cost when compared with epoxy coated steel construction. They are also impervious to corrosion caused by sewage or seawater and to marine vibration.

I have enclosed a copy of our brochure for our Models L-1X through L-4X, a supplementary New Reference Data sheet showing our newer Models L-5X and L-6X and typical installation drawings for the marine configuration.

DESIGN FOR COMPLIANCE WITH REGULATIONS

Units meeting minimum marine regulations are fully packed reactors with no provision for long term sludge storage. The reason is that the marine regulations only require passing a 10 day test (presumably reflecting that vessels are typically only in ports for short periods).

To design units for secondary treatment, we modify the unit interiors, reducing the volume of process media in order to free volume required for sludge storage. Hence, two rated capacities are shown for each standard unit – one designed to meet minimum marine regulations and the other designed to provide secondary treatment.

RATED CAPACITIES

Rated capacities in numbers of persons are shown in the table below for each of the standard models in this series. FAST units are rated in persons based upon applied BOD5 and hydraulic components are designed to handle the maximum associated flows.

Application of FAST LX-Series Units to Residences With and Without Garbage Disposal Units						
Model	L-1X	L-2X	L-3X	L-4X	L-5X	L-6X
unit rated capacity						
BOD5 lb/day (note 1)	0.162	0.241	0.323	0.482	0.484	0.969
flow gpd	130	190	240	360	380	740
With garbage disposal units						
Applied BOD5 lb/capita-day (note 2)	0.140	0.140	0.140	0.140	0.140	0.140
calculated persons	1.2	1.7	2.3	3.5	3.5	6.9
unit rated capacity - persons	1	1	2	3	3	7
Without garbage disposal units						
Applied BOD5 lb/capita-day (note 2)	0.100	0.100	0.100	0.100	0.100	0.100
calculated persons	1.6	2.4	3.2	4.8	4.9	9.7
unit rated capacity - persons	1	2	3	5	5	10

Notes:
1. Based upon nominal three month sludge storage in media tank.
2. BOD5 lb/capita day per EPA Onsite Wastewater Treatment Manual, EPA525R00008, February 2002.

MACHINERY AND PIPING DESIGN

The blower motor shown in the enclosed New Reference Data are based upon maximum marine rated capacities, transfer of oxygen in seawater and ambient temperatures of up to 50°C.

Since these units would be de-rated to provide secondary treatment, would operate with freshwater and would not subjected to engine room temperatures, aeration requirements will be reduced. Hence, smaller blowers with reduced motor sizes and power consumption will be employed.

Similarly, water pipe sizes shown are based upon water velocities associated with an effluent pump and would be revised based upon the Manning formula for gravity flow of effluent.

DRAWINGS ENCLOSED

Typical installation drawings are enclosed showing the FAST Model L-2X (one media tank) and the L-4X (two media tanks in series). Since these are current marine drawings, (a) the sectional assembly drawing shows the media tank as a fully packed reactor without a sludge compartment and (b) the unit is equipped with an effluent pump.

CERTIFICATIONS

The subject marine FAST units are certified by US Coast Guard under 33CFR159 and the International Maritime Organization and separately by Environment Canada under Canadian Great Lakes Sewage Prevention Regulations. Typical copies of certification letters are enclosed and any others can be furnished upon request.

Electrical equipment does meet CSA, a requirement of all marine equipment sold in Canada.

Units using the FAST process designed and manufactured by Bio-Microbics were tested and are certified under NSF Standard 40. But, the models which are the subject of this application were not so tested.

CONCLUSION

If you have any questions or require additional data, please feel free to contact me.

Thank you and best regards,

Alan Fleischer

Enclosures:

1. Form HHE-221
2. National Sanitation Foundation. *Report on Testing of the FAST Model 40D Marine Sanitation Device for Compliance with Part III, Canada Shipping Act, Great Lakes Sewage Pollution Prevention Regulations*
3. National Sanitation Foundation. *Report of Performance Testing of St. Louis Ship "FAST" Model 40D (modified) Marine Sanitation Devices under 33 CFR Part 159.1*
4. FAST Model L-2X Installation Drawings
5. FAST Model L-4X Installation Drawings
6. LX-Series Brochure
7. New LX-Series Reference Data
8. USCG Type II Certification of Marine Sanitation Device, Models L-1X through L-4X.
9. USCG Certificate of Approval Under IMO Resolution MEPC .2 (VI), FAST Model L-4X.

REPORT ON TESTING

OF THE FAST MODEL 40 D

MARINE SANITATION DEVICE

FOR COMPLIANCE WITH PART III

CANADA SHIPPING ACT

GREAT LAKES

SEWAGE POLLUTION PREVENTION REGULATIONS

Submitted by:
National Sanitation Foundation
For: St. Louis Ship
St. Louis, Missouri

REPORT ON COMPLIANCE TESTING OF THE FAST MARINE SANITATION SYSTEM

INTRODUCTION

This report covers the testing of a prototype marine sanitation device (MSD) known as the FAST Model 40 D. Testing was conducted for compliance with the Canada Shipping Act, Great Lakes Sewage Pollution Prevention Regulations by the National Sanitation Foundation (NSF) at their Wastewater Testing Facility in Chelsea, Michigan, during a period commencing March 13, 1978 and terminating April 24, 1978.

Data and other documentation exhibited in this report clearly indicate that the FAST Model 40 D, MSD performed most satisfactorily during the entire test period, and did meet or surpass all of the testing requirements imposed by Part III of the Great Lakes Regulations Sewage Pollution Prevention Regulations concerned with "Discharging Systems".

GENERAL

The prototype device is a biological system which employs a main treatment tank containing a submerged media bed to which the culture attaches itself and allows residual sludge to settle to the bottom from where it is periodically pumped out. Airlifts are used to aerate and circulate the contents of the tank. The process is turbulant and uses this turbulance to break down the solids against the side of the tank.

The media tank water level is constant, and treated water from below the media flows out by gravity through a specially designed spillover to a second tank or "wet well". The contents of the wet well are constantly circulated through the ultra violet (UV) disinfection unit until the high level float switch is activated and the disinfected effluent is then discharged by pumping. The UV device is fitted with a monitor

NSF-Chelsea Wastewater Test Facility (Temporary)

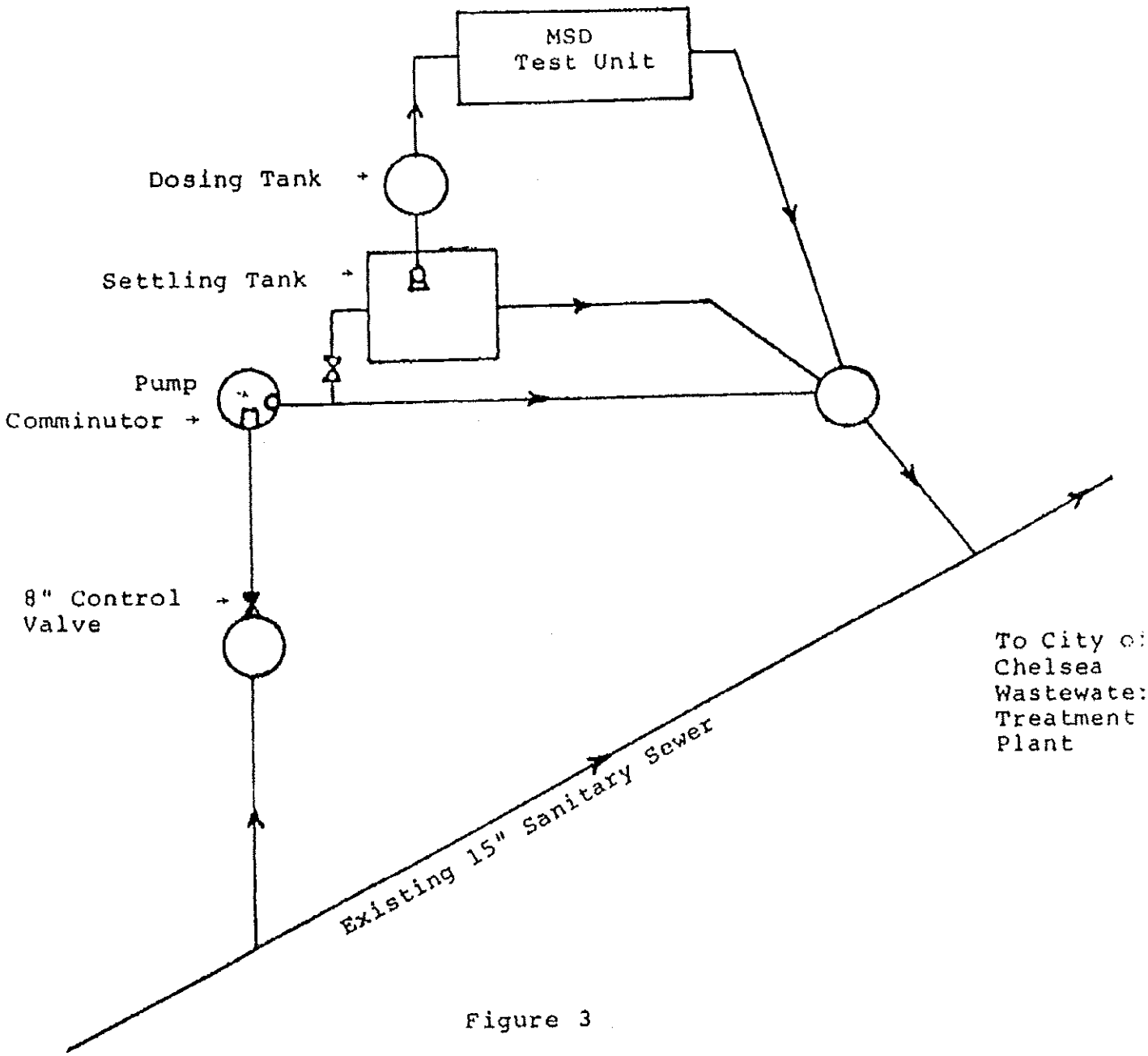

Figure 3

1. A small brass sample cock was placed in the discharge line from the UV device for effluent microbiological sampling.
2. A similar type sample cock was placed in the 2" line leading from the media tank to the "wet well" for the purpose of collecting a control sample for microbiological examination.
3. The sample cock which the manufacturer places near the bottom of the "wet well" was used for collecting a grab effluent sample used for chemical analysis.

In addition to these sampling points, a daily 24 hour influent composite sample, and a daily grab sample was collected from the raw sewage inlet to the device; located near to the settling tank. The composite sample was used for chemical analysis and the grab sample used for microbiological examination.

Sampling and analytical procedures were conducted in conformance with the recommended practices as documented in Standard Methods for the Examination of Water and Wastewater, fourteenth edition 1976 as published by the American Public Health Association; (Standard Methods). One exception to the foregoing included the taking of the effluent microbiological sample. In this instance the U.V. manufacturers recommended procedure was used (see Exhibit A at end of this report) to provide extra precautions against possible contamination during the sampling procedure.

DATA ANALYSIS

Performance of the device during testing was most satisfactory. Flow was provided to the test device in accordance with the previously shown feed schedule. Influent suspended solids averaged 1068 mg/ℓ over the entire test period. Analysis of the ten days of data presented shows an arithmetic mean for 40 samples analyzed for total suspended solids of 4mg/ℓ

Simulating salt water operation was achieved by the gradual addition of salt (calcium chloride) to the influent sewage, gradually raising the salinity from zero percent to three and one half percent over an eight hour period. A total of 101.5 lbs of salt was added to achieve the three and one half percent level.

The addition of salt on the seventh test day had no adverse impact upon operational performance. Predictable increases in the levels for total solids, and C.O.D. were observed during this test period.

TABLE B

SUMMARY OF CHEMICAL AND MICROBIOLOGICAL DATA
(Period 4/11/78 - 4/24/78)

PARAMETERS	UNITS	Arithmetic Mean		
		[1]Influent	[2]Effluent	% Removal
Total Solids	mg/l	2672	1667	37.6
Total Volatile Solids	%	47	15	68.0
Settleable Solids	mℓ/l	102	1	99.5
Suspended Solids	mg/l	1568	4	99.7
Volatile Suspended Solids	%	75	73	2.6
BOD_5	mg/l	564	6	98.9
COD	mg/l	1507	120	92.0
Turbidity	NTU'S	53	3	94.3
Total Phosphorus, as P	mg/l	12	2	83.3
pH	pH	7	7	-
Fecal Coliform MPN	No./100ml	>240,000	14	-
U.V. Transmission	%	-		91

[1]Mean of Ten Samples
[2]Mean of Forty Samples

TABLE C (2)

NATIONAL SANITATION FOUNDATION TESTING LABORATORY

REQUIRED TESTS FOR CANADIAN LABORATORY

DATE 13-14 April 1978

PARAMETERS	*SAMPLE IDENTIFICATION									
	C-0	C-1	C-2	C-3	C-4	D-0	D-1	D-2	D-3	D-4
Total Solids mg/l	1157	963	982	998	987	1104	927	915	911	915
Total Volatile Solids Percent	28	21	23	17	16	28	14	19	16	19
Settleable Solids mℓ/l	11	<0.5	<0.5	<0.5	<0.5	15	<0.5	<0.5	<0.5	<0.5
Suspended Solids mg/l	294	2	1	1	4	210	1	1	2	1
Volatile Suspended Solids Percent	65	50	100	100	50	74	100	100	50	100
B.O.D. mg/l	110	4	3	4	3	110	2	2	2	2
C.O.D. mg/l	474	126	122	130	122	190	34	46	61	65
Turbidity NTU's	>35	1.8	2	1.8	2.5	>38	1.5	1.8	1.5	1.7
Total Phosphorus mg/l	4.0	1.8	2.0	2.1	2.1	5.0	2.2	2.1	2.1	2.1
pH	7.4	7.5	8.2	8.0	8.0	7.5	8.1	8.1	8.1	8.2
Chlorides moles/ℓ										
U.V. Transmission Percent		97	93	92	96		93	96	95	94

Remarks:

*Letter indicates test day by alphabetic progression.

Numbers { 0 = Influent sample
1, 2, 3, 4 = Effluent sample in time collection sequence.

TABLE C (4)

NATIONAL SANITATION FOUNDATION TESTING LABORATORY

REQUIRED TESTS FOR CANADIAN LABORATORY

DATE 19-20 April 1978

PARAMETERS	*SAMPLE IDENTIFICATION									
	G-0	G-1	G-2	G-3	G-4	H-0	H-1	H-2	H-3	H-4
Total Solids mg/l	1955	1106	1483	3643	5057	3805	5700	4784	4511	4138
Total Volatile Solids Percent	43	18	14	6	4	60	4	4	5	5
Settleable Solids mℓ/l	78	<0.5	<0.5	<0.5	<0.5	110	<0.5	<0.5	<0.5	<0.5
Suspended Solids mg/l	1208	3	4	5	7	3580	4	2	7	9
Volatile Suspended Solids Percent	77	100	75	80	71	77	75	50	86	78
B.O.D. mg/l	513	5	4	8	8	1,100	7	6	9	9
C.O.D. mg/l	1,520	52	81	239	420	3,310	491	394	349	359
Turbidity NTU's	>50	2.5	2.5	4.0	3.0	>65	3.2	3.0	4.2	4.5
Total Phosphorus mg/l	15.	1.8	2.0	2.5	1.6	17.	1.8	2.0	2.0	2.1
pH	7.3	8.0	8.1	8.0	8.2	6.8	8.2	8.2	8.1	8.3
Chlorides moles/ℓ			.015	.060	.14		.13	.10	.076	.063
U.V. Transmission Percent		90	91	85	83					

Remarks:

*Letter indicates test day by alphabetic progression.

Numbers { 0 = Influent sample
1, 2, 3, 4 = Effluent sample in time collection sequence.

TABLE - D

TOTAL COLIFORM MPN (No./100 ml)

Date 1978	Sample Mark	Influent Sample	SAMPLE NUMBER[1]							
			1-C	1	2-C	2	3-C	3	4-C	4
4/11	A	$>2.4\times10^4$	-	-	TNTC[2]	<3	TNTC[2]	<3	-	<3
4/12	B	$>2.4\times10^4$	TNTC[2]	<3	TNTC[2]	<3	$>2.4\times10^4$	<3	$>2.4\times10^4$	<3
4/13	C	$>2.4\times10^4$	$>2.4\times10^4$	<3	$>2.4\times10^4$	<3	$>2.4\times10^4$	<3	$>2.4\times10^4$	<3
4/14	D	$>2.4\times10^4$	$>2.4\times10^4$	<3	$>2.4\times10^4$	<3	$>2.4\times10^4$	<3	$>2.4\times10^4$	<3
4/17	E	$>2.4\times10^4$	$>2.4\times10^4$	<3	$>2.4\times10^4$	<3	$>2.4\times10^4$	<3	$>2.4\times10^4$	<3
4/18	F	$>2.4\times10^4$	$>2.4\times10^4$	<3	$>2.4\times10^4$	<3	$>2.4\times10^4$	<3	$>2.4\times10^4$	<3
4/19	G	$>2.4\times10^4$	$>2.4\times10^4$	<3	$>2.4\times10^4$	<3	$>2.4\times10^4$	<3	$>2.4\times10^4$	<3
4/20	H	$>2.4\times10^4$	$>2.4\times10^4$	<3	$>2.4\times10^4$	<3	$>2.4\times10^4$	<3	$>2.4\times10^4$	<3
4/21	I	$>2.4\times10^4$	$>2.4\times10^4$	460	$>2.4\times10^4$	<3	$>2.4\times10^4$	<3	$>2.4\times10^4$	<3
4/24	J	$>2.4\times10^4$	$>2.4\times10^4$	<3	$>2.4\times10^4$	<3	$>2.4\times10^4$	4	$>2.4\times10^4$	4

1 The C designates a control sample collected just prior to U.V. Exposure.

2 Examination by tube fermentation method

REPORT OF PERFORMANCE TESTING OF

ST. LOUIS SHIP

"FAST" Model 40D (modified)

MARINE SANITATION DEVICES

Under

33 CFR Part 159.15

Submitted by:
National Sanitation Foundation
For: St. Louis Ship
St. Louis, Missouri
June, 1979

REPORT OF COMPLIANCE SPECIAL EVALUATION

GENERAL

This report covers the special testing of the marine sanitation device manufactured by St. Louis Ship and known as the FAST Model 40D. Testing of the unit was successfully conducted during the period of April 11, 1978 through April 24, 1978 for compliance with the Canada Shipping Act, Great Lakes Sewage Pollution Prevention Regulations. After the completion of testing, the United States Coast Guard was contacted in regard to certification of the FAST Model 40D under 33 CFR Part 159.15, and a verbal agreement was reached whereby a special sewage processing test would be performed in accordance with 33 CFR Part 159.121. Details of the testing performed by the recognized facility are described below along with an analysis of the data obtained during the special testing program.

On the basis of this submission the manufacturer is requesting certification under 33 CFR Part 159.15 for the FAST Model 40D.

SYSTEM DESCRIPTION

The device is a biological system which employs a main treatment tank containing a submerged media bed to which the culture attaches itself and allows residual sludge to settle to the bottom from where it is periodically pumped out. Airlifts are used to aerate and circulate the contents of the tank. The process is turbulant and uses this turbulance to break down the solids against the side of the tank.

The media tank water level is constant, and treated water from below the media flows out by gravity through a specially designed spillover through a tablet chlorinator to a second tank or "wet well". The contents of the wet well are held until a high level float switch is activated and the disinfected effluent is then discharged by pumping.

samples were dechlorinated at the time of collection, placed in an iced, insulated container, and promptly transported to the NSF laboratory in Ann Arbor, Michigan. Maximum elapsed time tetween sampling and inoculation of the fermentation tubes used in the Fecal Coliform MPN procedure was three hours.

DATA ANALYSIS

Performance of the device during testing was satisfactory, the unit meeting all the requirements for a Type II device. Complete data covering the five days of testing shows an average residual chlorine level of 1.3 mg/l for the 20 samples. Influent suspended solids ranged from 535 mg/l to 1800 mg/l with an average of 1154 mg/l. Influent BOD_5 for the test period ranged from 215 mg/l to >2300 mg/l with an average BOD_5 value of 562 mg/l. The 20 effluent suspended solids values were all below 10 mg/l with an average value of 4.6 mg/l The average of the 20 effluent BOD_5 values was 4.2 mg/l with a range from 2 mg/l to 14 mg/l. The range of effluent fecal coliform was from <3 MPN/100 ml to 23 MPN/100 ml with an average for the 20 samples analyzed of 9 MPN/100 ml.

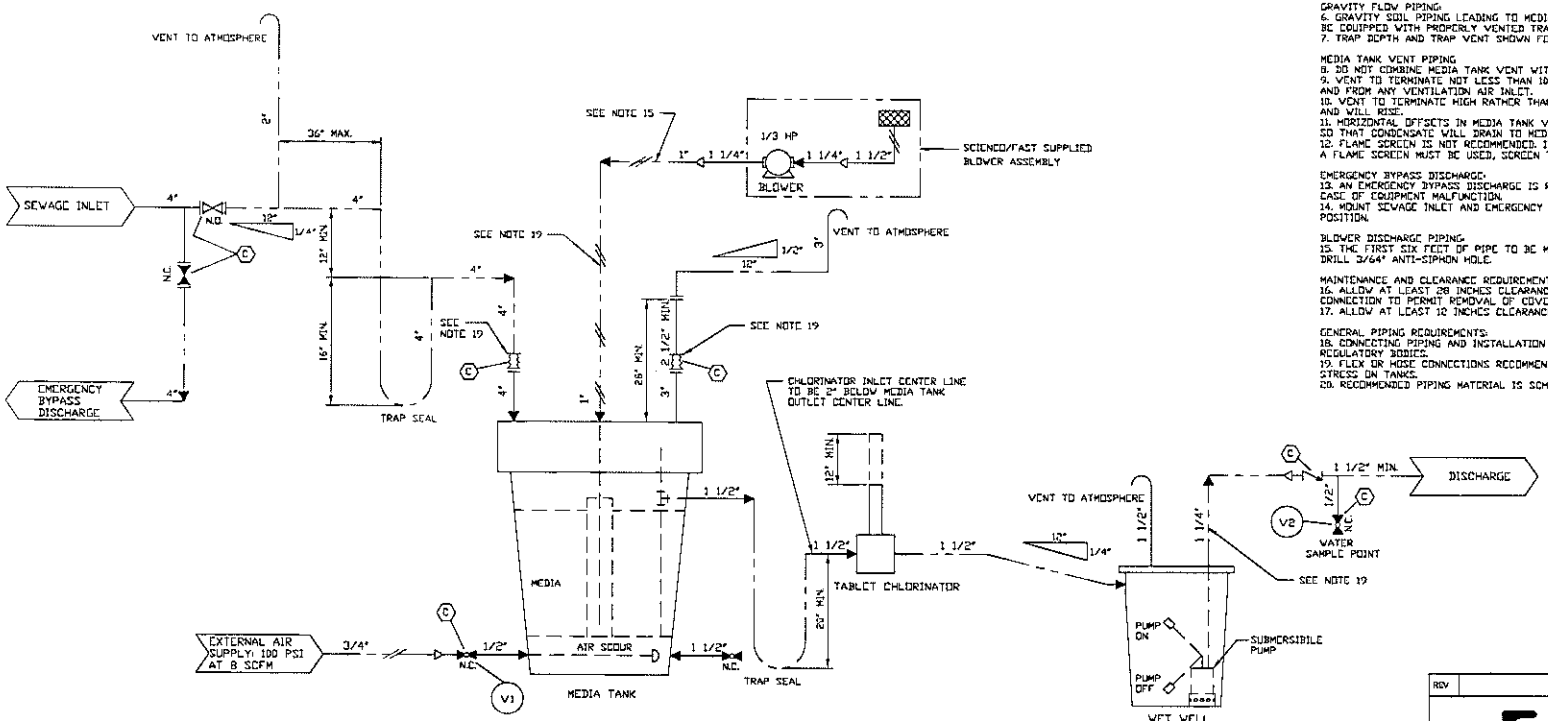

NOTES:

CRITICAL HEIGHTS:
1. CENTERLINE OF SOIL LINE TRAP INLET TO BE NOT LESS THAN 12 INCHES HIGHER THAN CENTERLINE OF MEDIA TANK INLET FLANGE.
2. BASE OF WET WELL TO BE LEVEL OR LOWER THAN BASE OF MEDIA TANK.
3. CHLORINATOR INLET ANGLE SHOULD BE 1/4" HIGHER THAN THE OUTLET ANGLE TO ACHIEVE SLOPE ANGLE.

FOUNDATIONS:
4. COMPONENTS MAY BE INSTALLED EITHER FORE AND AFT OR ATHWARTSHIPS.
5. SECURE TANKS' BASE STANDS ON A FLAT DECK OR BUILT UP FLAT SURFACE.

GRAVITY FLOW PIPING:
6. GRAVITY SOIL PIPING LEADING TO MEDIA TANK TO SLOPE NOT LESS THAN 1/4 INCH PER 12 INCHES AND BE EQUIPPED WITH PROPERLY VENTED TRAP AS SHOWN.
7. TRAP DEPTH AND TRAP VENT SHOWN FOR 4 INCH SOIL PIPE AND 2 INCH VENT PIPE.

MEDIA TANK VENT PIPING
8. DO NOT COMBINE MEDIA TANK VENT WITH ANY OTHER VENT.
9. VENT TO TERMINATE NOT LESS THAN 10 FEET ABOVE WEATHER DECK, FROM ANY SOURCE OF IGNITION AND FROM ANY VENTILATION AIR INLET.
10. VENT TO TERMINATE HIGH RATHER THAN LOW, SINCE VENTED AIR IS WARMER THAN SURROUNDING AIR AND WILL RISE.
11. HORIZONTAL OFFSETS IN MEDIA TANK VENT MUST BE SLOPED NOT LESS THAN 1/2 INCH PER 12 INCHES SO THAT CONDENSATE WILL DRAIN TO MEDIA TANK.
12. FLAME SCREEN IS NOT RECOMMENDED. IT WILL PLUG WITH LINT AND REQUIRE FREQUENT CLEANING. IF A FLAME SCREEN MUST BE USED, SCREEN TO BE TWO PIPE SIZES LARGER THAN VENT PIPE.

EMERGENCY BYPASS DISCHARGE:
13. AN EMERGENCY BYPASS DISCHARGE IS REQUIRED TO PROVIDE THE USE OF SANITARY FACILITIES IN CASE OF EQUIPMENT MALFUNCTION.
14. MOUNT SEWAGE INLET AND EMERGENCY BYPASS GATE VALVES WITH STEMS IN AN UPRIGHT VERTICAL POSITION.

BLOWER DISCHARGE PIPING:
15. THE FIRST SIX FEET OF PIPE TO BE METAL. AT THE HIGHEST POINT, WELL ABOVE MEDIA TANKTOP, DRILL 3/64" ANTI-SIPHON HOLE.

MAINTENANCE AND CLEARANCE REQUIREMENTS:
16. ALLOW AT LEAST 28 INCHES CLEARANCE ABOVE MEDIA TANK COVER TO VENT SPOOL FLANGED CONNECTION TO PERMIT REMOVAL OF COVER FOR INTERNAL REPAIR.
17. ALLOW AT LEAST 12 INCHES CLEARANCE ABOVE CHLORINE TABLET REFILL TUBES FOR TUBE REMOVAL.

GENERAL PIPING REQUIREMENTS:
18. CONNECTING PIPING AND INSTALLATION SHALL BE IN ACCORDANCE WITH REQUIREMENTS OF APPLICABLE REGULATORY BODIES.
19. FLEX OR HOSE CONNECTIONS RECOMMENDED FOR HOOK UP TO MEDIA AND WET WELL TANKS TO RELIEVE STRESS ON TANKS.
20. RECOMMENDED PIPING MATERIAL IS SCHEDULE 80 PVC.

LEGEND:

- CUSTOMER PROCESS PIPING
- CUSTOMER AIR PIPING
- N.O. NORMALLY OPEN
- N.C. NORMALLY CLOSED
- FLANGED CONNECTION
- REDUCER
- AIR FILTER
- GATE VALVE- FLANGED
- BALL VALVE- SCREWED
- CHECK VALVE- SCREWED
- FLEXIBLE CONNECTION
- (C) CUSTOMER SUPPLIED VALVE

NOTE: DRAWING DEPICTS SYSTEM IN NORMAL RUN POSITION.

MANUAL VALVE POSITION CHART

VALVE NO.	VALVE FUNCTION	OPERATING POSITION		
		RUN	SCOUR	DRAIN
V1	AIR SCOUR	CLOSED	OPEN	OPEN
VP	WATER SAMPLE	CLOSED		

BLOWER & PUMP OPERATION CHART

MOTOR CALLOUT	HP	OPERATING POSITION		
		RUN	SCOUR	DRAIN
BLOWER	1/3	ON	OFF	
PUMP	1/3	ON	OFF	ON

REV	DESCRIPTION	BY	DATE

SCIENCO/FAST®
12977 MAURER INDUSTRIAL DRIVE
SUNSET HILLS, MO 63127-1515 U.S.A.
PHONE: 314-845-8540 FAX: 314-845-8131

THIS DRAWING AND INFORMATION CONTAINED THEREIN IS THE PROPERTY OF SCIENCO/FAST SYSTEMS AND IS LOANED WITH THE EXPRESSED AGREEMENT THAT IT WILL NOT BE REPRODUCED, COPIED, OR OTHERWISE DISTRIBUTED, DIRECTLY OR INDIRECTLY, AND WILL NOT BE USED IN WHOLE OR IN PART, TO FURNISH ANY INFORMATION FOR THE MANUFACTURING OF EQUIPMENT OR APPARATUS WITHOUT WRITTEN PERMISSION OF SCIENCO/FAST SYSTEMS FIRST OBTAINED AND SPECIFIC TO EACH CASE.

SYSTEM: FAST SEWAGE TREATMENT

CUSTOMER:

TITLE: SYSTEM PIPING DIAGRAM & INSTALLATION DATA

SCALE	DRAWN	CHECKED	APPROVED
NONE	CEG		

SIZE	NEXT ASSY.	PREV. ASSY.	PLOT SCALE	DATE
D			1:1	2/15/06

CONTRACT NO.	MODEL NO.	DRAWING NO.	SHEET NO.	REV
	L2X	CU000	1 OF 1	0

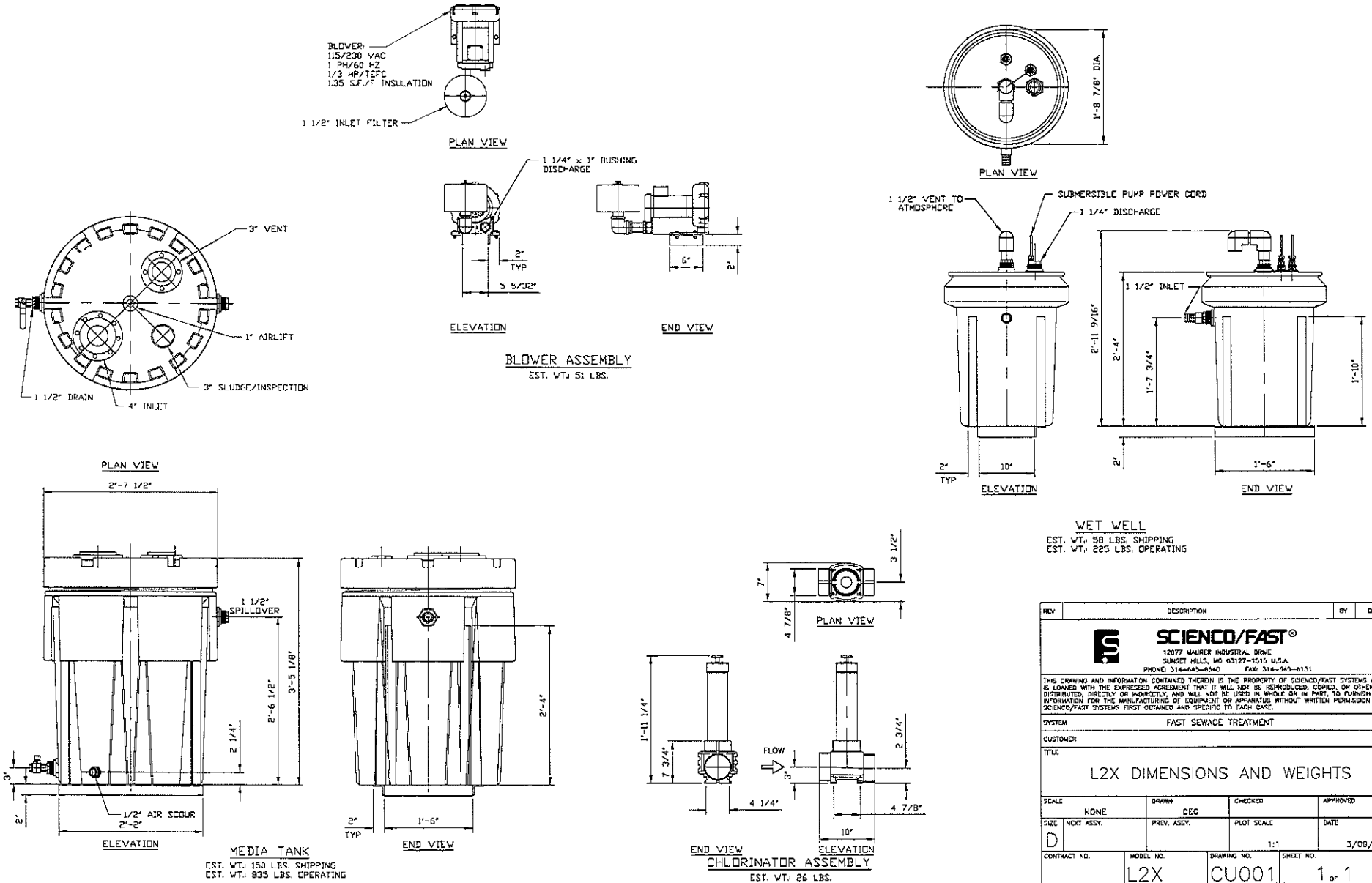
BLOWER:
115/230 VAC
1 PH/60 HZ
1/3 HP/TEFC
1.35 S.F./F INSULATION
1 1/2" INLET FILTER
PLAN VIEW
1 1/4" x 1" BUSHING DISCHARGE
2" TYP
5 5/32"
ELEVATION
6"
2"
END VIEW
BLOWER ASSEMBLY
EST. WT.: 51 LBS.
3" VENT
1" AIRLIFT
3" SLUDGE/INSPECTION
1 1/2" DRAIN
4" INLET
PLAN VIEW
1'-8 7/8" DIA.
PLAN VIEW
1 1/2" VENT TO ATMOSPHERE
SUBMERSIBLE PUMP POWER CORD
1 1/4" DISCHARGE
1 1/2" INLET
2'-11 9/16"
2'-4"
1'-7 3/4"
1'-10"
2"
2" TYP
10"
ELEVATION
1'-6"
END VIEW
WET WELL
EST. WT.: 58 LBS. SHIPPING
EST. WT.: 225 LBS. OPERATING
PLAN VIEW
2'-7 1/2"
1 1/2" SPILLOVER
3'-5 1/8"
2'-6 1/2"
2 1/4"
3"
2"
1/2" AIR SCOUR
2'-2"
ELEVATION
2'-4"
2" TYP
1'-6"
END VIEW
MEDIA TANK
EST. WT.: 150 LBS. SHIPPING
EST. WT.: 835 LBS. OPERATING
3 1/2"
7"
4 7/8"
PLAN VIEW
1'-11 1/4"
7 3/4"
4 1/4"
END VIEW
FLOW
2 3/4"
3"
4 7/8"
10"
ELEVATION
CHLORINATOR ASSEMBLY
EST. WT.: 26 LBS.
REV
DESCRIPTION
BY
DATE
SCIENCO/FAST®
12077 MAURER INDUSTRIAL DRIVE
SUNSET HILLS, MO 63127-1515 U.S.A.
PHONE: 314-845-6540 FAX: 314-845-6131
THIS DRAWING AND INFORMATION CONTAINED THEREIN IS THE PROPERTY OF SCIENCO/FAST SYSTEMS AND IS LOANED WITH THE EXPRESSED AGREEMENT THAT IT WILL NOT BE REPRODUCED, COPIED, OR OTHERWISE DISTRIBUTED, DIRECTLY OR INDIRECTLY, AND WILL NOT BE USED IN WHOLE OR IN PART, TO FURNISH ANY INFORMATION FOR THE MANUFACTURING OF EQUIPMENT OR APPARATUS WITHOUT WRITTEN PERMISSION OF SCIENCO/FAST SYSTEMS FIRST OBTAINED AND SPECIFIC TO EACH CASE.
SYSTEM
FAST SEWAGE TREATMENT
CUSTOMER
TITLE
L2X DIMENSIONS AND WEIGHTS
SCALE
NONE
DRAWN
CEG
CHECKED
APPROVED
SIZE
D
NEXT ASSY.
PREV. ASSY.
PLOT SCALE
1:1
DATE
3/09/06
CONTRACT NO.
MODEL NO.
L2X
DRAWING NO.
CU001
SHEET NO.
1 OF 1
REV
0

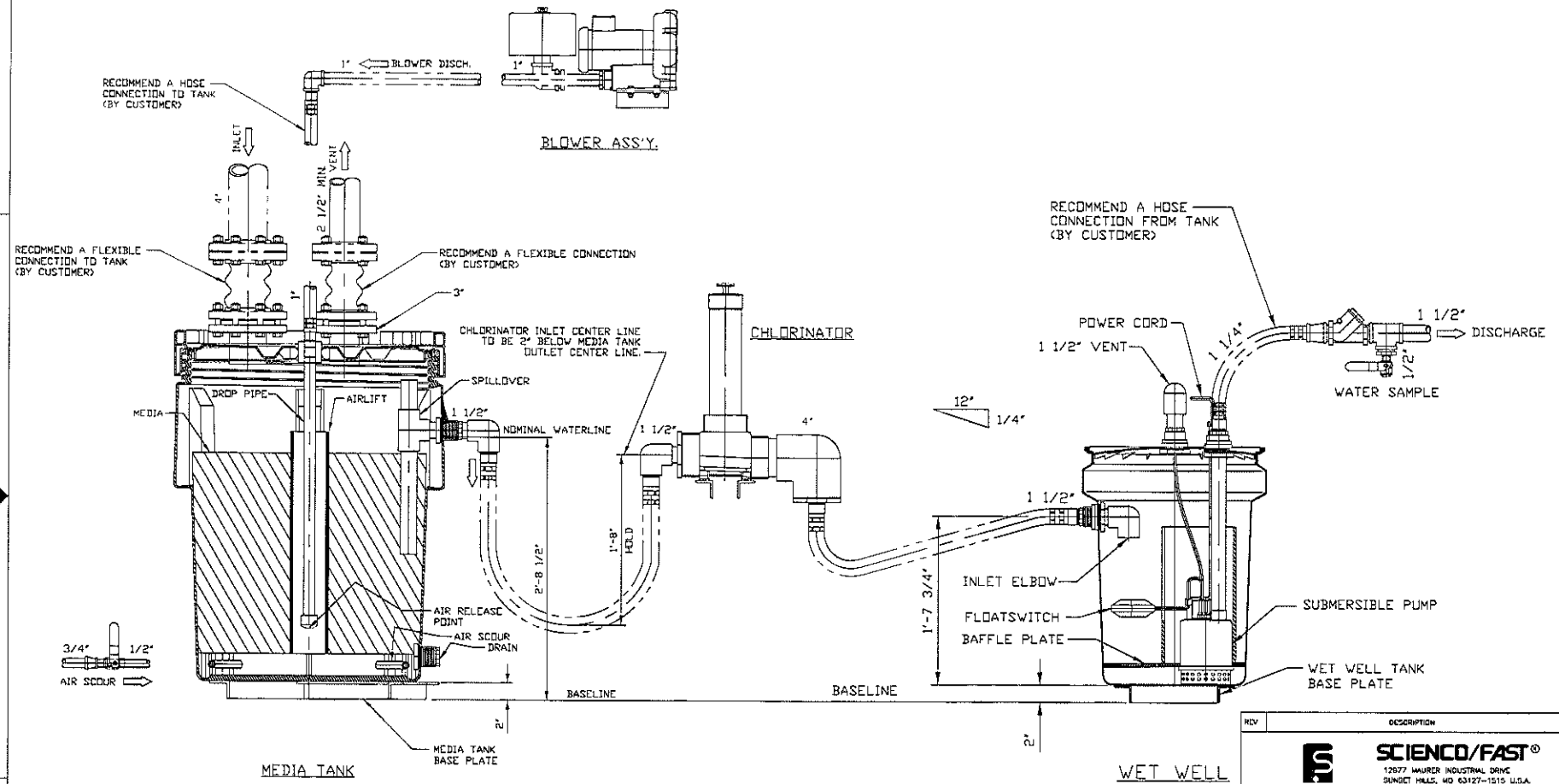

REV	DESCRIPTION	BY	DATE

SCIENCO/FAST®
12977 MAURER INDUSTRIAL DRIVE
SUNDET HILLS, MO 63127-1515 U.S.A.
PHONE: 314-645-8540 FAX: 314-645-6131

THIS DRAWING AND INFORMATION CONTAINED THEREIN IS THE PROPERTY OF SCIENCO/FAST SYSTEMS AND IS LOANED WITH THE EXPRESSED AGREEMENT THAT IT WILL NOT BE REPRODUCED, COPIED, OR OTHERWISE DISTRIBUTED, DIRECTLY OR INDIRECTLY, AND WILL NOT BE USED IN WHOLE OR IN PART, TO FURNISH ANY INFORMATION FOR THE MANUFACTURING OF EQUIPMENT OR APPARATUS WITHOUT WRITTEN PERMISSION OF SCIENCO/FAST SYSTEMS FIRST OBTAINED AND SPECIFIC TO EACH CASE.

SYSTEM: FAST SEWAGE TREATMENT

CUSTOMER:

TITLE: L2X SECTIONAL ASSEMBLIES

SCALE	DRAWN	CHECKED	APPROVED
NONE	CEC		

SIZE	NEXT ASSY.	PREV. ASSY.	PLOT SCALE	DATE
D			1:1	3/10/06

CONTRACT NO.	MODEL NO.	DRAWING NO	SHEET NO.	REV
	L2X	CU002	1 of 1	0

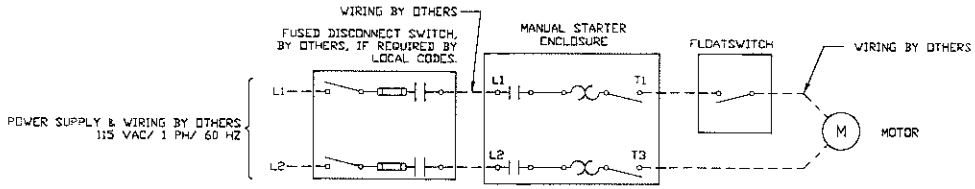

SINGLE PHASE PUMP WIRING DIAGRAM (STANDARD)

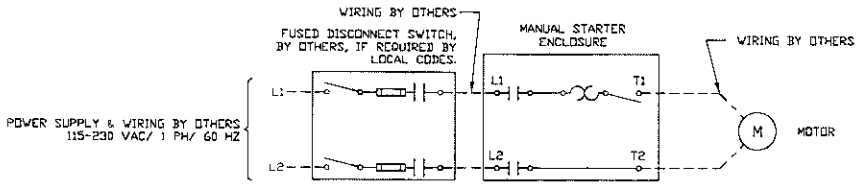

SINGLE PHASE BLOWER WIRING DIAGRAM (STANDARD)

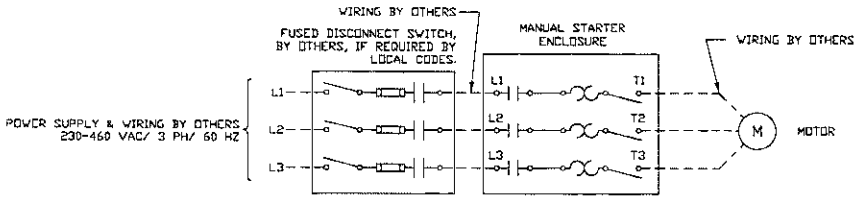

THREE PHASE BLOWER WIRING DIAGRAM (OPTIONAL)

NOTES:

1. FEEDER CABLE, OVERCURRENT PROTECTION AND WIRING OF REMOTE DEVICES BY OTHERS AND TO BE IN ACCORDANCE WITH THE REQUIREMENTS OF APPLICABLE REGULATORY BODIES.
2. STARER ENCLOSURE, NEMA 4/4X
3. STARTER COMPONENTS PER IEEE45

REV	DESCRIPTION	BY	DATE

SCIENCO/FAST®
12977 MAURER INDUSTRIAL DRIVE
SUNSET HILLS, MO 63127-1515 U.S.A.
PHONE: 314-845-8540 FAX: 314-845-8131

THIS DRAWING AND INFORMATION CONTAINED THEREIN IS THE PROPERTY OF SCIENCO/FAST SYSTEMS AND IS LOANED WITH THE EXPRESSED AGREEMENT THAT IT WILL NOT BE REPRODUCED, COPIED, OR OTHERWISE DISTRIBUTED, DIRECTLY OR INDIRECTLY, AND WILL NOT BE USED IN WHOLE OR IN PART, TO FURNISH ANY INFORMATION FOR THE MANUFACTURING OF EQUIPMENT OR APPARATUS WITHOUT WRITTEN PERMISSION OF SCIENCO/FAST SYSTEMS FIRST OBTAINED AND SPECIFIC TO EACH CASE.

SYSTEM: FAST SEWAGE TREATMENT

CUSTOMER: HOUSCO PACIFIC CO.

TITLE: BLOWER & PUMP WIRING DIAGRAMS

SCALE	DRAWN	CHECKED	APPROVED
NONE	CEG		

SIZE	NEXT ASSY.	PREV. ASSY.	PLOT SCALE	DATE
D			1:1	3/10/06

CONTRACT NO.	MODEL NO.	DRAWING NO.	SHEET NO.	REV
	L2X	EL500	1 of 1	0

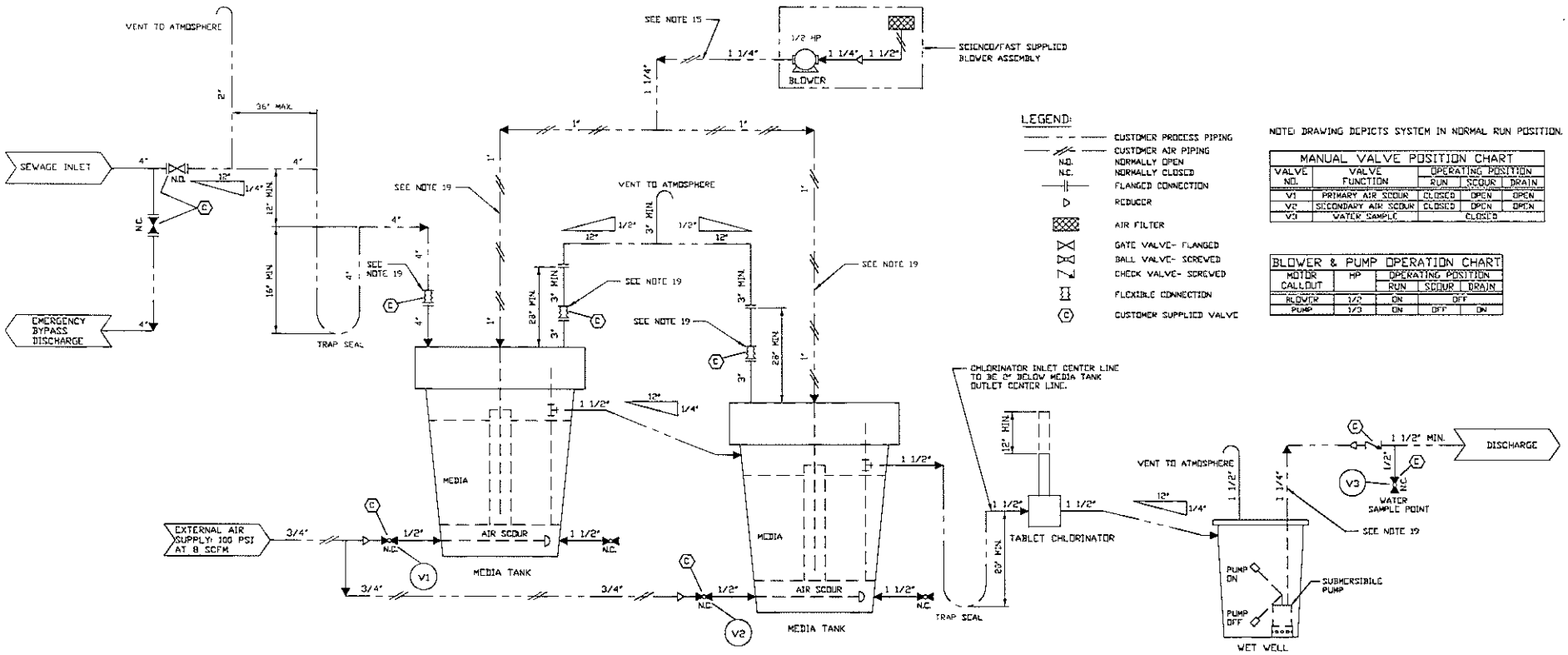

LEGEND:

- CUSTOMER PROCESS PIPING
- CUSTOMER AIR PIPING
- N.O. NORMALLY OPEN
- N.C. NORMALLY CLOSED
- FLANGED CONNECTION
- REDUCER
- AIR FILTER
- GATE VALVE- FLANGED
- BALL VALVE- SCREWED
- CHECK VALVE- SCREWED
- FLEXIBLE CONNECTION
- CUSTOMER SUPPLIED VALVE

NOTE: DRAWING DEPICTS SYSTEM IN NORMAL RUN POSITION.

MANUAL VALVE POSITION CHART

VALVE NO.	VALVE FUNCTION	OPERATING POSITION		
		RUN	SCOUR	DRAIN
V1	PRIMARY AIR SCOUR	CLOSED	OPEN	OPEN
V2	SECONDARY AIR SCOUR	CLOSED	OPEN	OPEN
V3	WATER SAMPLE	CLOSED		

BLOWER & PUMP OPERATION CHART

MOTOR CALLOUT	HP	OPERATING POSITION		
		RUN	SCOUR	DRAIN
BLOWER	1/2	ON	OFF	
PUMP	1/3	ON	OFF	ON

NOTES:

CRITICAL HEIGHTS:
1. CENTERLINE OF SOIL LINE TRAP INLET TO BE NOT LESS THAN 12 INCHES HIGHER THAN CENTERLINE OF MEDIA TANK INLET FLANGE.
2. BASE OF WET WELL TO BE LEVEL OR LOWER THAN BASE OF MEDIA TANK.
3. CHLORINATOR INLET ANGLE SHOULD BE 1/4" HIGHER THAN THE OUTLET ANGLE TO ACHIEVE SLOPE ANGLE.

FOUNDATIONS:
4. COMPONENTS MAY BE INSTALLED EITHER FORE AND AFT OR ATHWARTSHIPS.
5. SECURE TANKS' BASE STANDS ON A FLAT DECK OR BUILT UP FLAT SURFACE.

GRAVITY FLOW PIPING
6. GRAVITY SOIL PIPING LEADING TO MEDIA TANK TO SLOPE NOT LESS THAN 1/4 INCH PER 12 INCHES AND BE EQUIPPED WITH PROPERLY VENTED TRAP AS SHOWN.
7. TRAP DEPTH AND TRAP VENT SHOWN FOR 4 INCH SOIL PIPE AND 2 INCH VENT PIPE.

MEDIA TANK VENT PIPING
8. DO NOT COMBINE MEDIA TANK VENT WITH ANY OTHER VENT.
9. VENT TO TERMINATE NOT LESS THAN 10 FEET ABOVE WEATHER DECK, FROM ANY SOURCE OF IGNITION AND FROM ANY VENTILATION AIR INLET.
10. VENT TO TERMINATE HIGH RATHER THAN LOW, SINCE VENTED AIR IS WARMER THAN SURROUNDING AIR AND WILL RISE.
11. HORIZONTAL OFFSETS IN MEDIA TANK VENT MUST BE SLOPED NOT LESS THAN 1/2 INCH PER 12 INCHES SO THAT CONDENSATE WILL DRAIN TO MEDIA TANK.
12. FLAME SCREEN IS NOT RECOMMENDED. IT WILL PLUG WITH LINT AND REQUIRE FREQUENT CLEANING. IF A FLAME SCREEN MUST BE USED, SCREEN TO BE TWO PIPE SIZES LARGER THAN VENT PIPE.

EMERGENCY BYPASS DISCHARGE:
13. AN EMERGENCY BYPASS DISCHARGE IS REQUIRED TO PROVIDE THE USE OF SANITARY FACILITIES IN CASE OF EQUIPMENT MALFUNCTION.
14. MOUNT SEWAGE INLET AND EMERGENCY BYPASS GATE VALVES WITH STEMS IN AN UPRIGHT VERTICAL POSITION.

BLOWER DISCHARGE PIPING:
15. THE FIRST SIX FEET OF PIPE TO BE METAL AT THE HIGHEST POINT, WELL ABOVE MEDIA TANKTOP. DRILL 3/64" ANTI-SIPHON HOLE.

MAINTENANCE AND CLEARANCE REQUIREMENTS:
16. ALLOW AT LEAST 28 INCHES CLEARANCE ABOVE MEDIA TANK COVER TO VENT SPOOL FLANGED CONNECTION TO PERMIT REMOVAL OF COVER FOR INTERNAL REPAIR.
17. ALLOW AT LEAST 12 INCHES CLEARANCE ABOVE CHLORINE TABLET REFILL TUBES FOR TUBE REMOVAL.

GENERAL PIPING REQUIREMENTS:
18. CONNECTING PIPING AND INSTALLATION SHALL BE IN ACCORDANCE WITH REQUIREMENTS OF APPLICABLE REGULATORY BODIES.
19. FLEX OR HOSE CONNECTIONS RECOMMENDED FOR HOOK UP TO MEDIA AND WET WELL TANKS TO RELIEVE STRESS ON TANKS.
20. RECOMMENDED PIPING MATERIAL IS SCHEDULE 80 PVC.

REV	DESCRIPTION	BY	DATE

SCIENCO/FAST®
12977 MAURER INDUSTRIAL DRIVE
SUNSET HILLS, MO 63127-1515 U.S.A.
PHONE: 314-645-6540 FAX: 314-645-6131

THIS DRAWING AND INFORMATION CONTAINED THEREIN IS THE PROPERTY OF SCIENCO/FAST SYSTEMS AND IS LOANED WITH THE EXPRESSED AGREEMENT THAT IT WILL NOT BE REPRODUCED, COPIED, OR OTHERWISE DISTRIBUTED, DIRECTLY OR INDIRECTLY, AND WILL NOT BE USED IN WHOLE OR IN PART, TO FURNISH ANY INFORMATION FOR THE MANUFACTURING OF EQUIPMENT OR APPARATUS WITHOUT WRITTEN PERMISSION OF SCIENCO/FAST SYSTEMS FIRST OBTAINED AND SPECIFIC TO EACH CASE.

SYSTEM: FAST SEWAGE TREATMENT

CUSTOMER:

TITLE: SYSTEM PIPING DIAGRAM & INSTALLATION DATA

SCALE	DRAWN	CHECKED	APPROVED
NONE	CEG		

SIZE	NEXT ASSY.	PREV. ASSY.	PLOT SCALE	DATE
D			1:1	2/15/06

CONTRACT NO.	MODEL NO.	DRAWING NO.	SHEET NO.	REV
	L4X	CU000	1 or 1	0

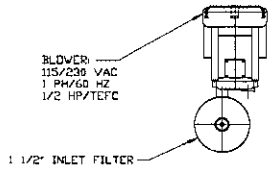

PLAN VIEW

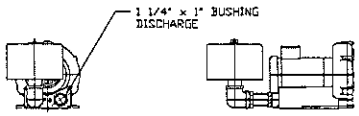

ELEVATION END VIEW

BLOWER ASSEMBLY
EST. WT.: 48 LBS.

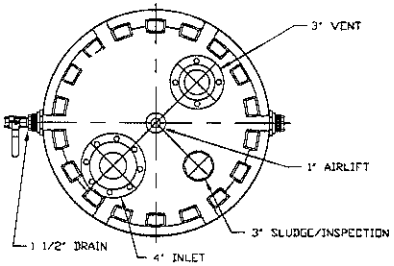

PLAN VIEW

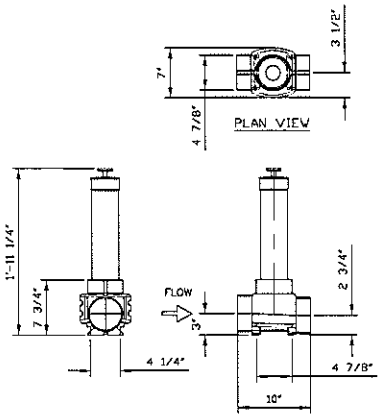

END VIEW ELEVATION

CHLORINATOR ASSEMBLY
EST. WT.: 26 LBS.

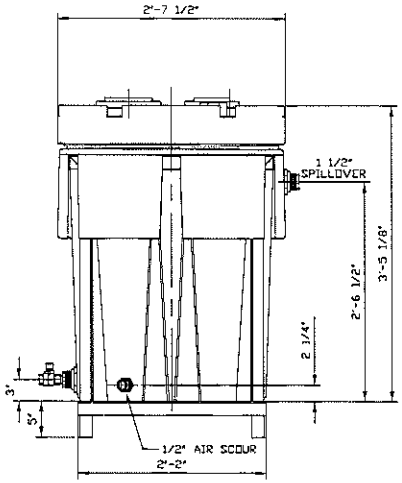

ELEVATION

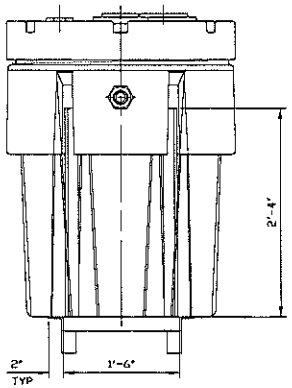

END VIEW

PRIMARY MEDIA TANK
EST. WT.: 175 LBS. SHIPPING
EST. WT.: 860 LBS. OPERATING

REV	DESCRIPTION	BY	DATE

SCIENCO/FAST®
12977 MAURER INDUSTRIAL DRIVE
SUNSET HILLS, MO 63127-1315 U.S.A.
PHONE: 314-645-6540 FAX: 314-645-8131

THIS DRAWING AND INFORMATION CONTAINED THEREIN IS THE PROPERTY OF SCIENCO/FAST SYSTEMS AND IS LOANED WITH THE EXPRESSED AGREEMENT THAT IT WILL NOT BE REPRODUCED, COPIED, OR OTHERWISE DISTRIBUTED, DIRECTLY OR INDIRECTLY, AND WILL NOT BE USED IN WHOLE OR IN PART, TO FURNISH ANY INFORMATION FOR THE MANUFACTURING OF EQUIPMENT OR APPARATUS WITHOUT WRITTEN PERMISSION OF SCIENCO/FAST SYSTEMS FIRST OBTAINED AND SPECIFIC TO EACH CASE.

SYSTEM: FAST SEWAGE TREATMENT

CUSTOMER:

TITLE: L4X DIMENSIONS AND WEIGHTS

SCALE	DRAWN	CHECKED	APPROVED
NONE	CEG		

SIZE	NEXT ASSY.	PREV. ASSY.	PLOT SCALE	DATE
D			1:1	8/08/05

CONTRACT NO.	MODEL NO.	DRAWING NO.	SHEET NO.	REV
	L4X	CU001	1 of 2	0

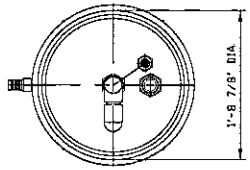

PLAN VIEW

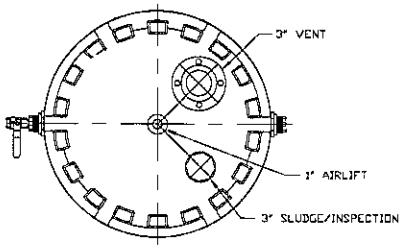

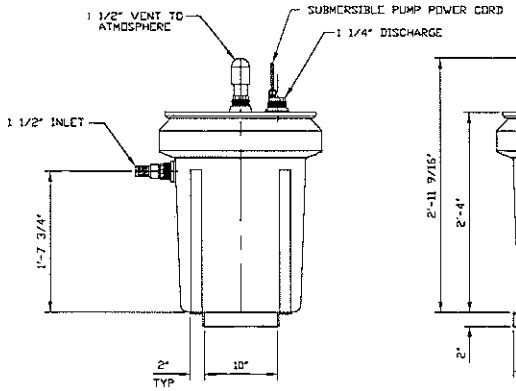

ELEVATION

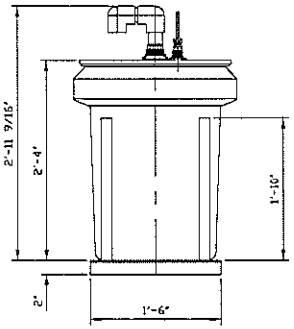

END VIEW

WET WELL

EST. WT.: 65 LBS. SHIPPING
EST. WT.: 315 LBS. OPERATING

PLAN VIEW

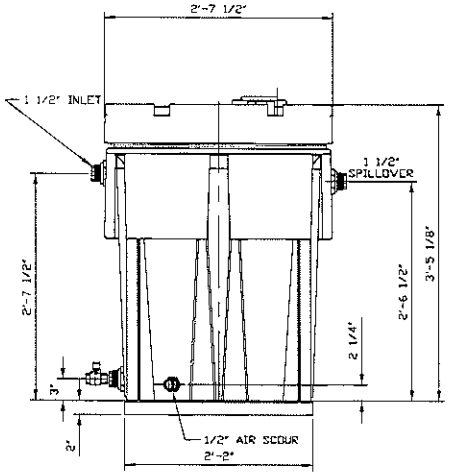

ELEVATION

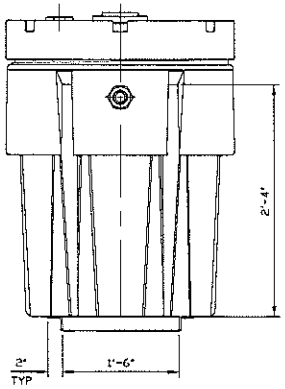

END VIEW

SECONDARY MEDIA TANK

EST. WT.: 150 LBS. SHIPPING
EST. WT.: 835 LBS. OPERATING

REV	DESCRIPTION	BY	DATE

SCIENCO/FAST®
12977 MAURER INDUSTRIAL DRIVE
SUNSET HILLS, MO 63127-1515 U.S.A.
PHONE: 314-845-8540 FAX: 314-845-6131

THIS DRAWING AND INFORMATION CONTAINED THEREIN IS THE PROPERTY OF SCIENCO/FAST SYSTEMS AND IS LOANED WITH THE EXPRESSED AGREEMENT THAT IT WILL NOT BE REPRODUCED, COPIED, OR OTHERWISE DISTRIBUTED, DIRECTLY OR INDIRECTLY, AND WILL NOT BE USED IN WHOLE OR IN PART, TO FURNISH ANY INFORMATION FOR THE MANUFACTURING OF EQUIPMENT OR APPARATUS WITHOUT WRITTEN PERMISSION OF SCIENCO/FAST SYSTEMS FIRST OBTAINED AND SPECIFIC TO EACH CASE.

SYSTEM: FAST SEWAGE TREATMENT

CUSTOMER:

TITLE: L4X DIMENSIONS AND WEIGHTS

SCALE	DRAWN	CHECKED	APPROVED
NONE	CEG		

SIZE	NEXT ASSY.	PREV. ASSY.	PLOT SCALE	DATE
D			1:1	8/08/05

CONTRACT NO.	MODEL NO.	DRAWING NO.	SHEET NO.	REV
	L4X	CU001	2 OF 2	0

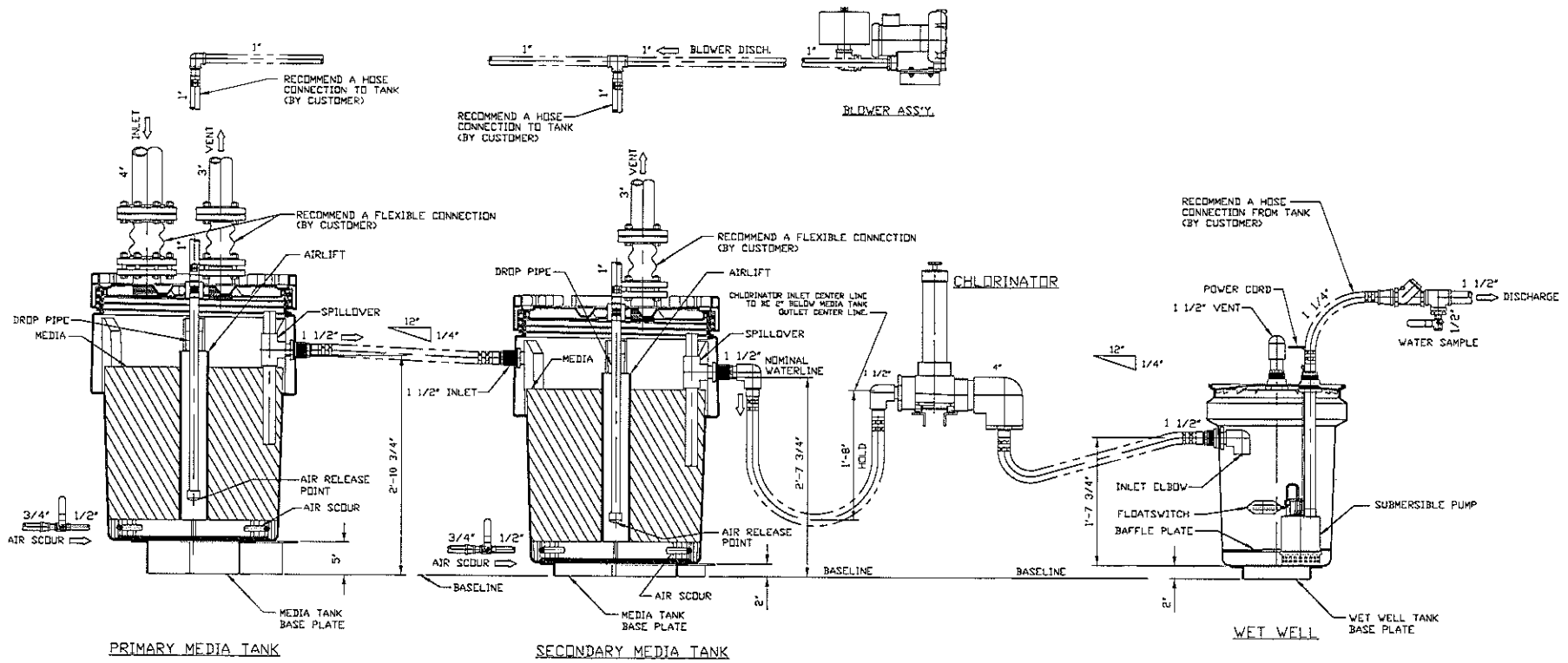

REV	DESCRIPTION	BY	DATE

SCIENCO/FAST®
12077 MAURER INDUSTRIAL DRIVE
SUNSET HILLS, MO 63127-1515 U.S.A.
PHONE: 314-645-6540 FAX: 314-645-6131

THIS DRAWING AND INFORMATION CONTAINED THEREIN IS THE PROPERTY OF SCIENCO/FAST SYSTEMS AND IS LOANED WITH THE EXPRESSED AGREEMENT THAT IT WILL NOT BE REPRODUCED, COPIED, OR OTHERWISE DISTRIBUTED, DIRECTLY OR INDIRECTLY, AND WILL NOT BE USED IN WHOLE OR IN PART, TO FURNISH ANY INFORMATION FOR THE MANUFACTURING OF EQUIPMENT OR APPARATUS WITHOUT WRITTEN PERMISSION OF SCIENCO/FAST SYSTEMS FIRST OBTAINED AND SPECIFIC TO EACH CASE.

SYSTEM: FAST SEWAGE TREATMENT

CUSTOMER:

TITLE: L4X SECTIONAL ASSEMBLIES

SCALE	DRAWN	CHECKED	APPROVED
NONE	CEC		

SIZE	NEXT ASSY.	PREV. ASSY.	PLOT SCALE	DATE
D			1:1	8/08/05

CONTRACT NO.	MODEL NO.	DRAWING NO.	SHEET NO.	REV
	L4X	CU002	1 OF 1	0

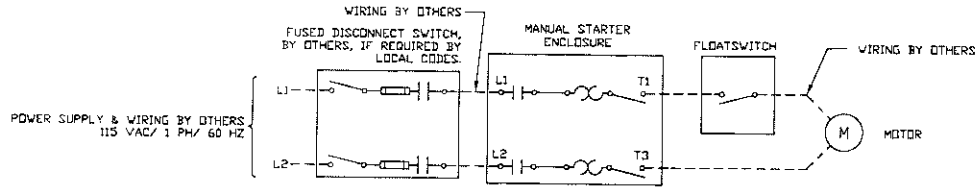

SINGLE PHASE PUMP WIRING DIAGRAM (STANDARD)

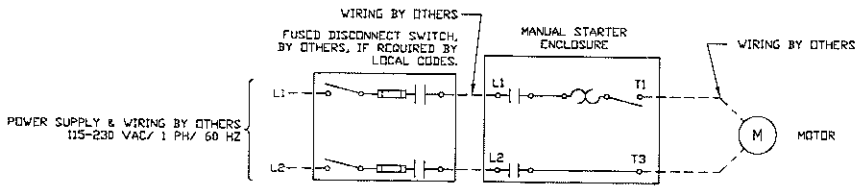

SINGLE PHASE BLOWER WIRING DIAGRAM (STANDARD)

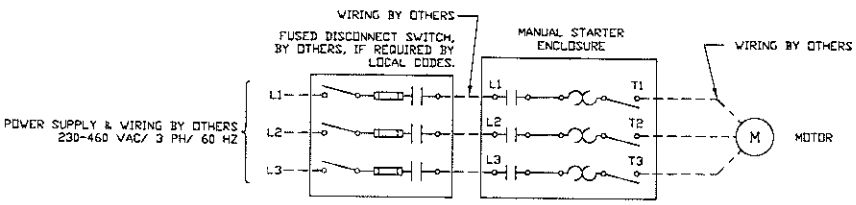

THREE PHASE BLOWER WIRING DIAGRAM (OPTIONAL)

NOTES:

1. FEEDER CABLE, OVERCURRENT PROTECTION AND WIRING OF REMOTE DEVICES BY OTHERS AND TO BE IN ACCORDANCE WITH THE REQUIREMENTS OF APPLICABLE REGULATORY BODIES.

REV	DESCRIPTION	BY	DATE

SCIENCO/FAST®
12977 MAURER INDUSTRIAL DRIVE
SUNSET HILLS, MO 63127-1515 U.S.A.
PHONE: 314-845-8540 FAX: 314-845-8131

THIS DRAWING AND INFORMATION CONTAINED THEREIN IS THE PROPERTY OF SCIENCO/FAST SYSTEMS AND IS LOANED WITH THE EXPRESSED AGREEMENT THAT IT WILL NOT BE REPRODUCED, COPIED, OR OTHERWISE DISTRIBUTED, DIRECTLY OR INDIRECTLY, AND WILL NOT BE USED IN WHOLE OR IN PART, TO FURNISH ANY INFORMATION FOR THE MANUFACTURING OF EQUIPMENT OR APPARATUS WITHOUT WRITTEN PERMISSION OF SCIENCO/FAST SYSTEMS FIRST OBTAINED AND SPECIFIC TO EACH CASE.

SYSTEM: FAST SEWAGE TREATMENT

CUSTOMER:

TITLE: BLOWER & PUMP WIRING DIAGRAMS

SCALE	DRAWN	CHECKED	APPROVED
NONE	CEG		

SIZE	NEXT ASSY.	PREV. ASSY.	PLOT SCALE	DATE
D			1:1	3/10/06

CONTRACT NO.	MODEL NO.	DRAWING NO.	SHEET NO	REV
	L4X	EL500	1 OF 1	0

brochure 3041

NEW!

LX-Series

Ideal for harbor tugs and small commercial vessels.

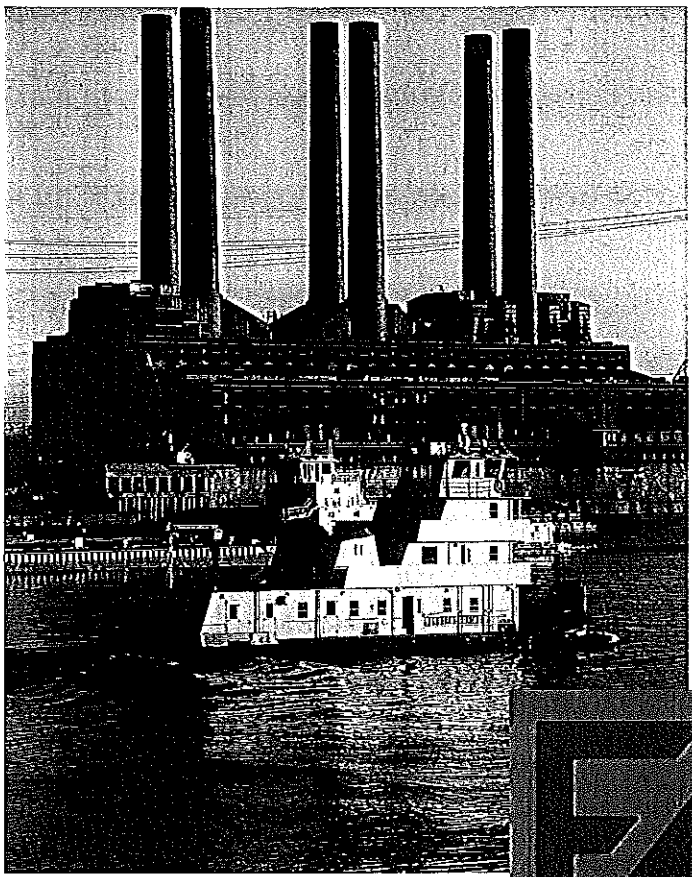

- Harbor Tugs
- Fish Boats
- Pilot Boats
- Fireboats
- Towboats
- Small Vessels

Features

- Modular Systems for Marine and Offshore Applications
- USCG/IMO Certified
- Self cleaning
- Lightweight DOT certified tanks
- Easy low cost operation that does not require special training or expensive spare parts
- Economical
- Reliable

FAST® SYSTEMS
Smith & Loveless Inc.
Commercial Division

LX-Series

These four components make up the modular LX-Series **FAST**® System. The interconnecting piping can be easily installed to meet your vessel's requirements.

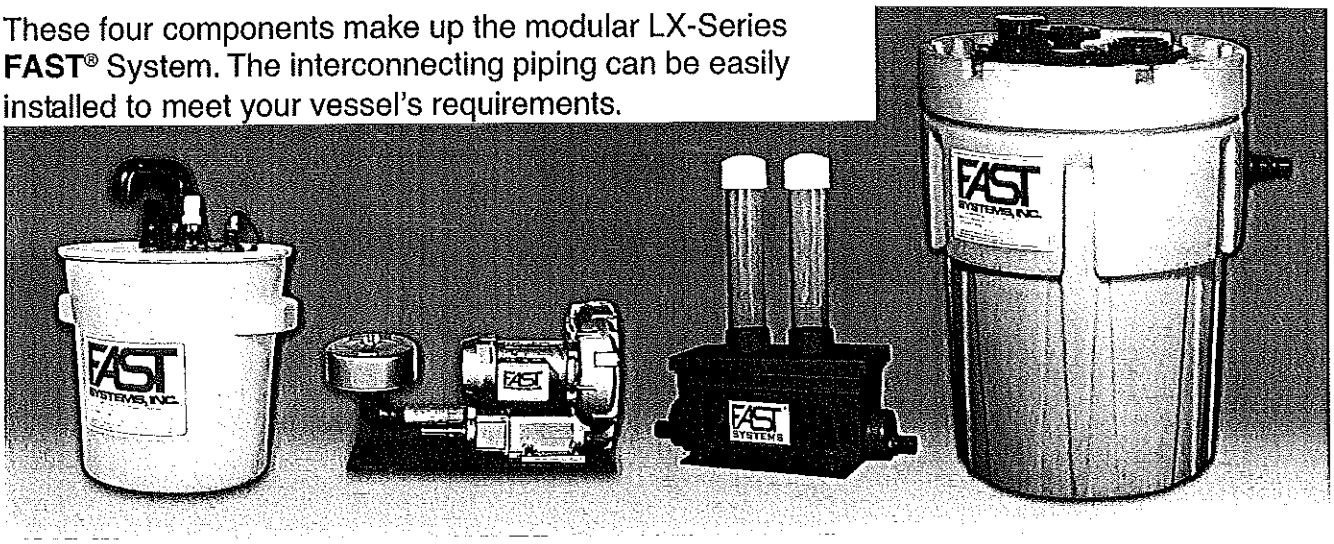

Standard Specifications

Complete System.
Assembled and tested at the factory; the **FAST**® LX-Series System includes blower, pump, chlorinator, valves and controls required for automatic operation.

Process.
Fixed Activated Sludge Treatment (**FAST**®) employs fixed media as the site for microbial growth.

Certification.
Certified by USCG under 33 CFR Part 159 and IMO rules for both inspected and uninspected vessels.

Sewage Treated.
Any combination of standard & vacuum toilets, fresh & salt water, showers, laundry, galley.

Rated Capacity.
Any population from zero to max on-board persons.

Operating Conditions.
Max air temperature 50° C., min water temperature 10° C., max roll ±45°.

Overload Capacity.
Up to 150% rated capacity for up to 24 hours.

Machinery.
Regenerative turbine blower, stainless steel submersible effluent pump, tablet chlorinator.

Electric Service Required.
115 VAC 1 phase 60 Hz power.

Construction.
Heavy duty salvage drums meet DOT 49 CFR Part 173.3.

Consumables.
Chlorine tablet consumption is only 1.9 lb. per year, per person with standard toilets, 0.2 lb. per year, per person with vacuum toilets, add 2.5 lb. per year, per person for gray water.

Options.

Secondary Treatment - tank modified to produce effluent containing less than 30 mg/l BOD5, 30 mg/l SS.

Electric Service - 208-230/460 VAC 3 phase 60 Hz blower motor, 50 Hz power.

Chlorine Pump - use laundry bleach instead of chlorine tablets.

Sizing and Selecting Units

Rated capacity is shown for treatment of black water and hand sinks from persons working and living aboard the vessel. If persons work but do not live aboard, count each of these persons as one-half a person to obtain the equivalent number of live-on persons.

If other types of sewage are added to black water, add applicable factors from table below to obtain the service factor, multiply crew size by the service factor to get equivalent black water crew size and use this figure to select a unit from the table.

Example: Harbor tug manned around the clock by 3 shifts of 3 men each shift. The load is equivalent to 3 X 3 ÷ 2 = 5 persons (rounded up). Use **FAST®** Model L-1X, which is rated up to 6 persons.

FAST® LX-Series Design Data				
Model	L-1X	L-2X	L-3X	L-4X
Max Live-On Persons	6	8	12	17
Number of Media Tanks	1	1	2	2
Media Tank Diameter (in)	28	31	28	31
Height	38	42	38	42
Wet Well Diameter (in)	21	21	21	21
Height	24	24	24	31
Estimated Weights (lb)				
Shipping	300	300	400	400
Operating	900	1,100	1,400	1,800
Pipe Sizes				
Sewage Inlet	4	4	4	4
Pump Discharge	1 1/2	1 1/2	1 1/2	1 1/2
Vent	2	2 1/2	3	3
Effluent Pump TDH (ft)	20	20	20	20
Motor Horsepowers				
Effluent Pump	1/3	1/3	1/3	1/3
Turbine Blower	1/3	1/3	1/3	1/2

Type of Sewage	Service Factor
Toilets, urinals, lavatories	1.00
Showers	0.42
Laundry	0.31
Galley sink, dishwasher	0.33
Ground food waste	1.21
Total all domestic sewage	3.27

Have It Your Way . . . FAST®

FAST® LX-Series Systems are economical, lightweight modular systems for small vessels. **FAST®** Systems are also available in epoxy coated steel, stainless steel and aluminum tank designs for all crew sizes, from the very smallest to the very largest vessels. For more information, visit **www.marinefast.com**. You can also send us an e-mail at **solutions@marinefast.com** or call us at **(314) 645-6540** today.

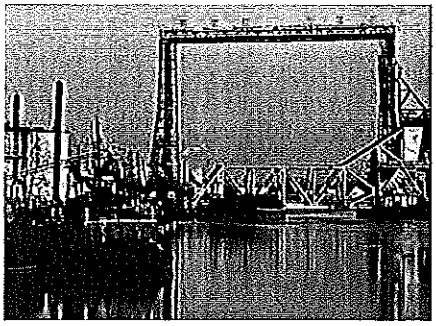

*From the very smallest to the very largest vessels, **FAST®** Systems has a sewage system to meet your vessel's requirements.*

Exclusive Benefits of FAST®

Natural Process.
FAST® is a biological process, the most widely used method of sewage treatment in the world. It is economical, reliable and effective.

Superior Technology.
FAST® process technology is literally state-of-the-art. Approved for both marine and land use, **FAST®** Systems can meet the most stringent standards worldwide.

No Adjustments.
FAST® is self-regulating. It handles surges, overloads and light loads without problems.

Flexible.
FAST® Systems can handle any combination of fresh water or seawater sewage.

Compact.
Operating weight is typically half that of competing biological units.

Operator Friendly.
The equipment is simple and rugged. Operation does not depend upon the skill of the operator.

Maintenance.
The only maintenance is adding chlorine tablets.

Reliable and Durable.
FAST® LX-Series Systems will not corrode in seawater. They won't rust, clog or smell.

Proven.
Since 1969, approximately 4,500 **FAST®** Systems have been delivered. Virtually all remain in everyday operation.

FAST® SYSTEMS

Smith & Loveless, Inc. Commercial Division
12977 Maurer Industrial Drive
Sunset Hills, MO 63127, USA
Phone: (314) 645-6540
Fax: (314) 645-6131
URL: www.marinefast.com
E-mail: solutions@marinefast.com

©2005 Smith & Loveless Inc.

FAST LX-Series Reference Data - Standard Units

Model	L-1X	L-2X	L-3X	L-4X	L-5X	L-6X
Max Live-On Persons						
USCG / IMO Effluent	6	9	11	17	18	35
Secondary Treatment	3	5	6	9	9	19
Number Of Media Tanks	1	1	2	2	1	2
Media Tank Diameter (in)	28	32	28	32	40	40
Height	37	42	37	42	57	57
Wet Well Diameter (in)	22	22	22	22	22	28
Height	29	29	29	29	29	37
Estimated Weights (lb)						
Shipping	400	500	600	700	700	1,200
Operating	1,100	1,300	1,600	2,100	2,100	4,100
Pipe Sizes						
Sewage inlet	4	4	4	4	4	4
Pump Discharge	1 1/2	1 1/2	1 1/2	1 1/2	1 1/2	1 1/2
Vent	2	2 1/2	3	3	4	6
Motor Horsepowers						
Effluent Pump	1/3	1/3	1/3	1/3	1/3	1/3
Turbine Blower	1/4	1/2	1/2	3/4	3/4	1

Sewage Service Factors	
Type of waste	factor
black water	1.00
personal wash water	0.42
laundry	0.31
dishwashing	0.33
garbage disposal	1.21

FAST Systems, Smith & Loveless, Inc.
12977 Maurer Industrial Drive
St.Louis, MO 63127-1515
tel: (314)645-6540, fax: (314)645-6131
email: solutions@marinefast.com
URL: www.marinefast.com

Sizing and Selecting Units

1. Rated capacities shown are for treatment of blackwater only for persons working and living aboard. If persons work but do not live aboard, count each of these as one-half person.
2. If other types of sewage are to be treated in addition to blackwater, add the applicable factors to obtain a total service factor.
3. Multiply the number of live-on persons by the service factor to obtain equivalent blackwater persons. Use this figure to select the correct unit.
4. For special effluent requirements, consult factory.

U.S. Department of Homeland Security
United States Coast Guard

Commanding Officer
United States Coast Guard
Marine Safety Center
www.uscg.mil/hq/msc

400 7th Street, S.W.
Washington, DC 20590-0001
Staff Symbol: MSC-2
Phone: (202) 366-6444
FAX: (202) 366-7991
E-mail: ec@msc.uscg.mil

16714/159.015/FAST
P009077/E1-0505935
October 18, 2005

Mr. Alan Fleisher
Fast Systems
Smith and Loveless Inc.
12977 Maurer Industrial Drive
Sunset Hills, MO 63127-1515

USCG TYPE II CERTIFICATION OF A MARINE SANITATION DEVICE (MSD)
SCIENCO/FAST MSD

We have reviewed your letter dated August 16, 2005, requesting a renewal and change in capacity for your currently certified Marine Sanitation Devices. We approve of your request to amend the listed capacities of your MSDs. The models specified below continue to meet the requirements of Title 33, Code of Federal Regulations (CFR), Part 159 and shall be labeled in accordance with 33 CFR 159.16. The use of plastic pipe on these devices shall be in accordance with the (IMO) Resolution A.753 (18), *Guidelines for the Application of Plastic Pipes on Ships* as required by 33 CFR 159.97 and 46 CFR 56.60-25 (a). The use of flexible electric cord shall be in accordance with 46 CFR 111.60-13.

Model	Capacity	Certification No.	Certified for	Date Expires
L-1X	130 GPD	159.015/375/1	Inspected Vessels	October 18, 2010
L-2X	190 GPD	159.015/376/1	Inspected Vessels	October 18, 2010
L-3X	255 GPD	159.015/377/1	Inspected Vessels	October 18, 2010
L-4X	380 GPD	159.015/378/1	Inspected Vessels	October 18, 2010

The certification remains valid until the expiration dates listed, unless we suspend, withdraw, or terminate it. Only the manufacturer of the MSD may apply for this certification to be renewed, but must submit a written request to this office prior to the expiration date. If the MSD is no longer produced, the MSD continues to be considered certified based on the MSD date of manufacture, the vessel installation date, and a valid certification for that time period. This certification cannot be transferred to another manufacturer without written authorization from this office. You must notify us in writing of any proposed changes to the design or construction of these devices.

Sincerely,

R. K. HUNT
Commander, U. S. Coast Guard
Chief, Engineering Division
By direction

U. S. Department of Homeland Security
United States Coast Guard
Certificate of Approval

Coast Guard Approval Number: 159.015/378/1 Expires: 01 August 2011

MARINE SANITATION DEVICE
CERTIFICATE OF TYPE TEST UNDER IMO RES. MEPC.2(VI)

FAST SYSTEMS
12977 MAURER INDUSTRIAL DRIVE
SUNSET HILLS, MO 63127-1515

Type II, Model L-4X, 1435 LPD (380 GPD), for Inspected vessels.

This is to certify that Scienco/Fast Model L-4X, having a designed hydraulic loading of 1.435 m3/day, an organic loading of .42 kg/day Biochemical Oxygen Demand (BOD) and of the design shown on drawing L-1X CU000-002 has been examined and satisfactorily tested in accordance with the Inter-Governmental Maritime Consultative Organization Resolution MEPC.2(VI) to meet the operational requirements referred to in Regulation 3(1)(a)(ii) of Annex IV of the International Convention of the Prevention of Pollution from Ships, 1973.

The tests were carried out on similar equipment (Model 40D) ashore at National Sanitation Foundation and recorded in test report of June 1979.

The equipment produced an effluent which did not exceed 250 fecal coliform per 100 ml/MPN, and a geometric mean of total Suspended Solids of 50 mg/l.

The control equipment was tested for shock and vibration. The geometric mean of 5 day BOD does not exceed 50 mg/l and the equipment can operate under conditions of heel up to 15 degrees. A plate or durable label containing manufacturer's name, type and serial umber, hydraulic loading and manufacture date is to be fitted to the unit. A copy of this certificate should be carried on board at all times. IMO Certificates of Type Approval do not expire and are valid for equipment manufactured at any time during the period of validity of this Certificate.

This certificate renews approval no. 159.015/0378/1 dated October 18, 2005 and documents compliance with 46 CFR 159.015.

*** END ***

THIS IS TO CERTIFY THAT the above named manufacturer has submitted to the undersigned satisfactory evidence that the item specified herein complies with the applicable laws and regulations as outlined on the reverse side of this Certificate, and approval is hereby given. This approval shall be in effect until the expiration date hereon unless sooner canceled or suspended by proper authority.

GIVEN UNDER MY HAND THIS 1st DAY OF AUGUST 2006, AT WASHINGTON D.C.

C.K. MARCY
Acting Chief, Engineering Division
U.S. Coast Guard Marine Safety Center

TERMS: The approval of the item described on the face of the Certificate has been based upon the submittal of satisfactory evidence that the item complies with the applicable provisions of the navigation and shipping laws and the applicable regulations in Title 33 and/or Title 46 of the Code of Federal Regulations. The approval is subject to any conditions noted on this Certificate and in the applicable laws and regulations governing the use of the item on vessels subject to Coast Guard inspection or on other vessels and boats.

Consideration will be given to an extension of this approval provided application is made 3 months prior to the expiration date of this Certificate.

The approval holder is responsible for making sure that the required inspections or tests of materials or devices covered by this approval are carried out during production as prescribed in the applicable regulations.

The approval of the item covered by this certificate is valid only so long as the item is manufactured in conformance with the details of the approved drawings, specifications, or other data referred to. No modification in the approved design, construction, or materials is to be adopted until the modification has been presented for consideration by the Commandant and confirmation received that the proposed alteration is acceptable.

NOTICE: Where a manufacturer of safety-at-sea equipment is offering for sale to the maritime industry, directly or indirectly, equipment represented to be approved, which fails to conform with either the design details or material specifications, or both, as approved by the Coast Guard, immediate action may be taken to invoke the various penalties and sanctions provided by law including prosecution under 46 U.S.C. 3318, which provides:

"A person that knowingly manufactures, sells, offers for sale, or possesses with intent to sell, any equipment subject to this part *(Part B. of Subtitle II of Title 46 U.S.C.).* and the equipment is so defective as to be insufficient to accomplish the purpose for which it is intended, shall be fined not more than $10,000, imprisoned for not more than 5 years or both."