DO NOT SCALE, IF IN DOUBT ASK

REVISIONS					
REV.	DATE	DESCRIPTION	SHEET	ZONE	AUTH#
A	–	–			
B	–	–			
C	–	–			
D	–	–			

STATE OF MAINE
DEPARTMENT OF TRANSPORTATION

CONSTRUCTION OF A 154' LOA PASSENGER FERRY VESSEL
PROJECT NUMBER FBD-1168(100)X

LIST OF DRAWINGS

DRAWING NUMBER	DRAWING TITLE
575-02-001	LINES PLAN
575-02-100	DESIGN PACKAGE COVER SHEET
575-02-111	STRUCTURE BELOW MAIN DECK
575-02-131	DECK SCANTLINGS
575-02-151	SUPERSTRUCTURE SCANTLINGS
575-02-153	PILOT HOUSE STRUCTURE
575-02-201	MACHINERY ARRANGEMENT
575-02-243	SHAFTING ARRANGEMENT
575-02-259	MACHINERY EXHAUST SYSTEM DIAGRAM
575-02-261	FUEL OIL SYSTEM DIAGRAM
575-02-301	AC ELECTRICAL LOAD ANALYSIS
575-02-302	DC ELECTRICAL LOAD ANALYSIS
575-02-305	LIGHTING PLAN
575-02-320	ONE LINE DIAGRAM OF ELECTRICAL SYSTEM
575-02-321	ONE LINE DIAGRAM OF 24 VDC ELECTRICAL SYSTEM
575-02-422	NAVIGATION LIGHT ARRANGEMENT
575-02-431	INTERNAL COMMUNICATIONS SYSTEM DIAGRAM
575-02-436	ALARM SYSTEM DIAGRAM
575-02-506	VENTS AND FILLS SYSTEM DIAGRAMS
575-02-510	ENGINE ROOM VENTILATION SYSTEM DIAGRAM
575-02-511	DOMESTIC HEATING SYSTEM DIAGRAM
575-02-514	DOMESTIC VENTILATION SYSTEM DIAGRAM
575-02-521	FIRE, SPRINKLER AND WASHDOWN SYSTEM
575-02-526	SCUPPERS AND DECK DRAINS SYSTEM DIAGRAM
575-02-528	SANITARY GRAY AND BLACK WATER SYSTEM DIAGRAM
575-02-529	BILGE SYSTEM DIAGRAM
575-02-533	DOMESTIC WATER SUPPLY SYSTEM DIAGRAM
575-02-536	FRESH WATER COOLING SYSTEM DIAGRAM
575-02-543	LUBRICATING OIL SYSTEM DIAGRAM
575-02-551	COMPRESSED AIR SYSTEM DIAGRAM
575-02-562	RUDDER ARRANGEMENT
575-02-568	BOW THRUSTER ARRANGEMENT
575-02-581	ANCHOR ARRANGEMENT
575-02-582	MOORING PLAN
575-02-583	FIRE CONTROL AND SAFETY PLAN
575-02-593	WASTE OIL AND OILY WATER SYSTEM DIAGRAM
575-02-601	GENERAL ARRANGEMENTS
575-02-602	ADA DETAILS
575-02-635	STRUCTURAL FIRE PROTECTION AND INSULATION DETAILS
575-02-661	PILOT HOUSE GENERAL ARRANGEMENT

STATE OF MAINE
JOHN A. HUNTER
NO. 10737
REGISTERED PROFESSIONAL ENGINEER
10-3-05

ITEM	PART CODE	DESCRIPTION	MATERIAL	QTY
5	–	–	–	–
4	–	–	–	–
3	–	–	–	–
2	–	–	–	–
1	–	–	–	–

BILL OF MATERIALS

NO.	REFERENCES
3	–
2	–
1	–

APPROVALS:	SUBMIT DATE	APPROVED BY	APPROVED DATE	RE-SUBMIT DATE	APPROVED BY	APPROVED DATE
OWNER	–	–	–	–	–	–
USCG	–	–	–	–	–	–
ABS	–	–	–	–	–	–
USPHS	–	–	–	–	–	–

STATE OF MAINE
DEPARTMENT OF TRANSPORTATION

APPROVED	DATE
COMMISSIONER:	
CHIEF ENGINEER:	

Seaworthy Systems, Inc.
MARINE ENGINEERS NAVAL ARCHITECTS
P.O. BOX 965
ESSEX, CT 06426
USA
TEL: 860-767-9061
FAX: 860-767-1263

CHECKED BY	AUTH° BY	SCALE
JAH 09-30-05	JAH 09-30-05	NONE
DRAWN BY	ORIG° DATE	DIMS IN INCHES UNLESS OTHERWISE STATED
LAG	09-26-05	

FOR
MAINE STATE FERRY SERVICE
P.O. BOX 645, 517A MAIN STREET
ROCKLAND, ME 04841-0645

TITLE 154' RO/RO/PASS FERRY

TITLE SHEET

SIZE	DRG No.	REV.	SHEET
D	575-02-100	–	1 OF 1

SSI FILE No. s:\active\projnumb\575-02\575-02-100.dwg

DO NOT SCALE, IF IN DOUBT ASK

GENERAL NOTES:

1. ALL DIMENSIONS ARE TO THE MOLDED SHELL:

TOP OF DECK BEAMS/UNDERSIDE OF DECKS
INSIDE SURFACES OF BOTTOM, SKEG, GUARD.

2. LOFTING OF MOLDS, FRAMES, AND STRONGBACKS TO BE CARRIED OUT USING REFERENCE 2 (DIGITAL FORMAT OF LINES SURFACES).

3. THIS PLAN SUPERCEDES SHAPE DATA SHOWN ON OTHER PLANS, E.G. "SCANTLINGS BELOW MAIN DECK", "STRUCTURAL SECTIONS", "MACHINERY ARRANGMENT".

REVISIONS

REV.	DATE	DESCRIPTION	SHEET	ZONE	AUTH°
A	1/06/2006	ADDED FRAME REFERENCE LINE	1	5–A	JAH
B	–	–			
C	–	–			
D	–	–			

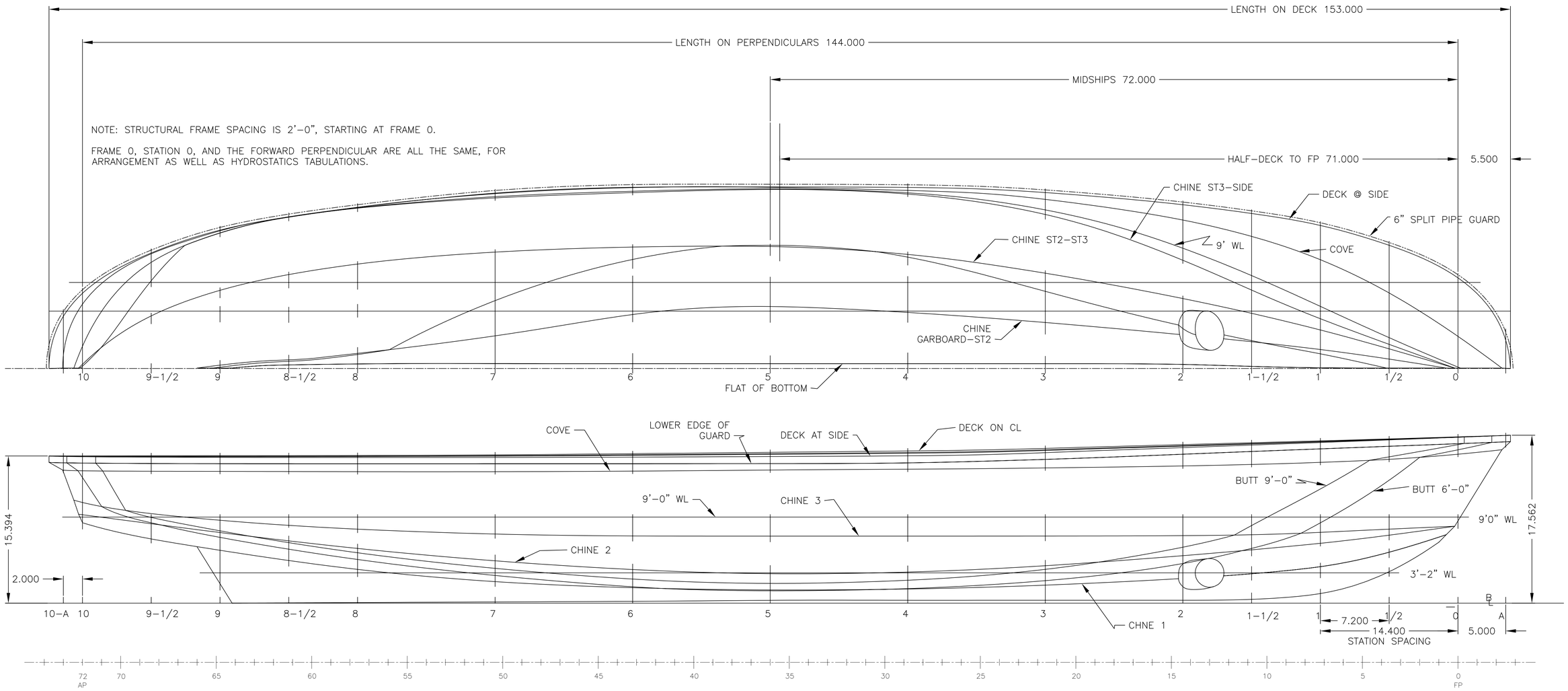

NOTE: STRUCTURAL FRAME SPACING IS 2'–0", STARTING AT FRAME 0.

FRAME 0, STATION 0, AND THE FORWARD PERPENDICULAR ARE ALL THE SAME, FOR ARRANGEMENT AS WELL AS HYDROSTATICS TABULATIONS.

UPPER DECKS HAVE SHEER IDENTICAL TO THE MAIN DECK.

HULL LINES, PLAN AND PROFILE

SCALE: 3/16 IN = 1 FT

DIMENSIONS ARE "FEET"

STATE OF MAINE JOHN A. HUNTER NO. 10737 REGISTERED PROFESSIONAL ENGINEER 10-3-05

$\frac{3}{16}$" = 1'–0"

NO.	REFERENCES
3	575–02–111, "SCANTLINGS BELOW MAIN DECK"
2	IGES_SURF_575–02–HULL–K.IGS
1	SPECIFICATIONS

APPROVALS:	SUBMIT DATE	APPROVED BY	APPROVED DATE	RE–SUBMIT DATE	APPROVED BY	APPROVED DATE
OWNER	–	–	–	–	–	–
USCG	–	–	–	–	–	–
ABS	–	–	–	–	–	–
USPHS	–	–	–	–	–	–

Seaworthy Systems, Inc.
MARINE ENGINEERS NAVAL ARCHITECTS
P.O. BOX 965
ESSEX, CT 06426
USA
TEL: 860–767–9061
FAX: 860–767–1263

CHECKED BY	AUTH° BY	SCALE
JAH 09–30–05	JAH 09–30–05	3/16" = 1'–0"
DRAWN BY	ORIG° DATE	
WRP	9–30–05	DIMS IN INCHES UNLESS OTHERWISE STATED

FOR
MAINE STATE FERRY SERVICE
P.O. BOX 645, 517A MAIN STREET
ROCKLAND, ME 04841–0645

TITLE 154' RO/RO/PASS FERRY

LINES PLAN

SIZE	DRG No.	REV.	SHEET
D	575–02–001	A	1 OF 2

SSI FILE No. s:\active\projnumb\575–02\drafting\active\575–02–001.dwg

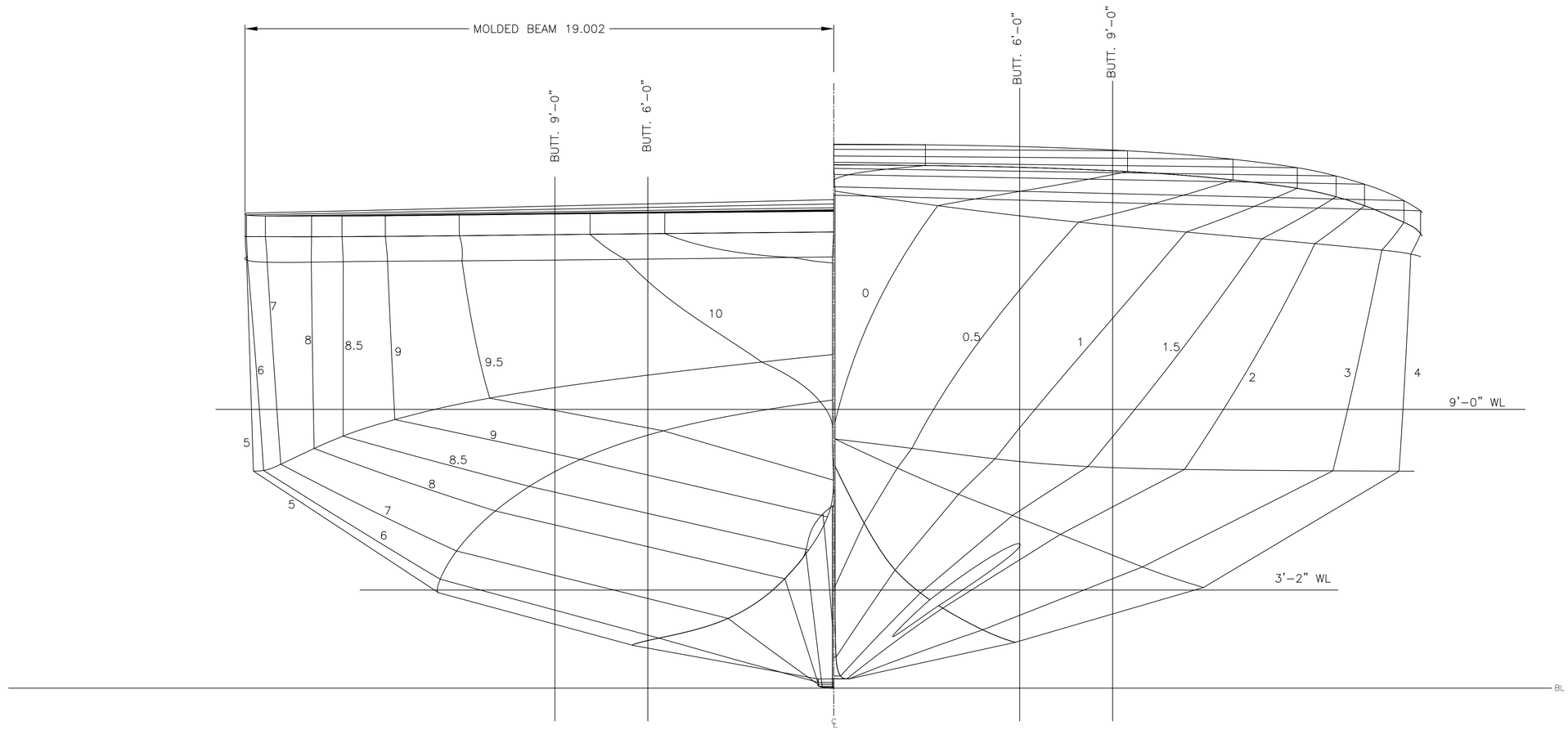

HULL BODY PLAN

DIMENSIONS ARE FEET

SCALE: 1/2 IN = 1 FT

1/2"=1'-0"

Seaworthy Systems, Inc.

P.O. BOX 965
ESSEX, CT 06426
USA
TEL: 860-767-9061
FAX: 860-767-1263

MARINE ENGINEERS
NAVAL ARCHITECTS

FOR

MAINE STATE FERRY SERVICE
P.O. BOX 645 517A MAIN ST
ROCKLAND, ME 04841-0645

TITLE 154' RO/RO/PASS FERRY

LINES PLAN

SCALE		SIZE	DRG No.	REV.	SHEET
1/2" = 1'-0"	DIMS IN INCHES UNLESS OTHERWISE STATED	D	575-02-001	A	2 OF 2

SSI FILE No. s:\active\projnumb\575-02\575-02-001.dwg

DO NOT SCALE, IF IN DOUBT ASK

REVISIONS					
REV.	DATE	DESCRIPTION	SHEET	ZONE	AUTH^{D}
A	1/31/2006	ADDED FRAME DIMENSION	1	2–C	JAH
		CORRECTED PLATE THICKNESS FOR SIDE STRUCTURE ON MIDSHIP SECTION	2	13–C	JAH
	–	ADDED ACCESS TO F.O. TANK	10	79–C	JAH
C	–	–			
D	–	–			

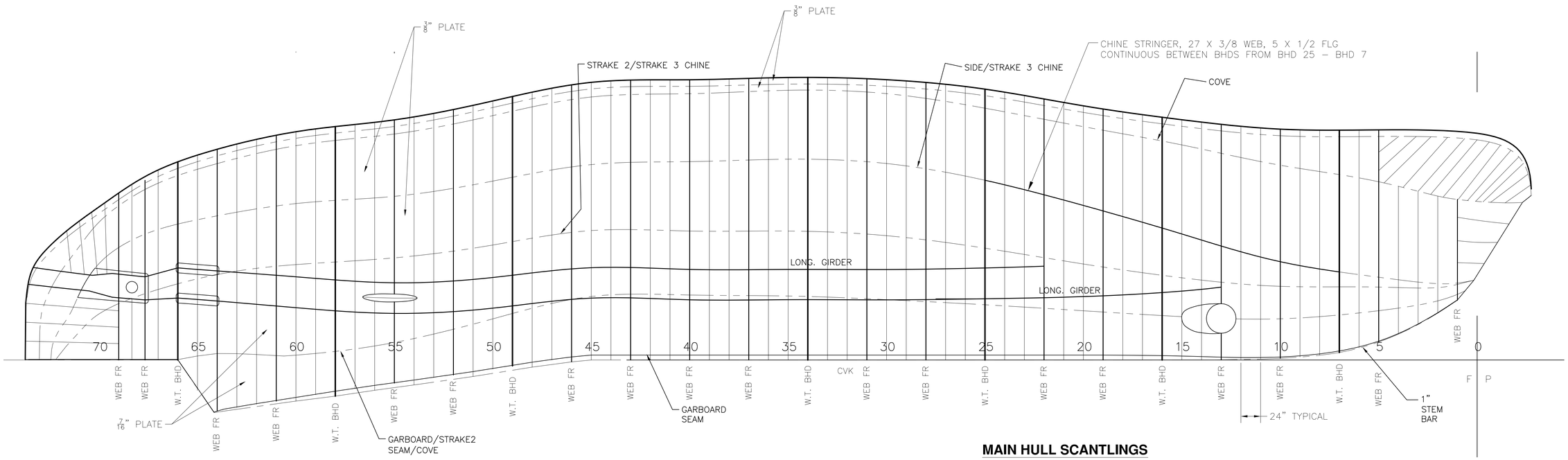

MAIN HULL SCANTLINGS

LONG. GIRDERS P/S ARE CONTINUOUS WITH SLOTS FOR ORDINARY FRAMES.
TRANSVERSE WEB FRAMES ARE INTERCOSTAL BETWEEN LONG. GIRDERS.
CVK CONTINUOUS, SEE SHEET 18.
SCALE: 3/16" = 1'–0"

GENERAL NOTES:

1. ALL PLATE LESS THAN OR EQUAL TO 3/8" TO BE ASTM A–36. ALL PLATE HEAVIER THAN 3/8" TO BE ABS APPROVED GRADE.

2. SCANTLINGS NOT SHOWN ON THIS PLAN ARE SHOWN ON REFERENCED PLANS. DETAILS THAT ARE TYPICAL ARE USUALLY ANNOTATED IN ONE PLACE ONLY.

4. ALL SNIPED END BHD STIFFENERS TO END NO MORE THAN 1" FROM BHD, DECK OR BOTTOM. SNIPE TO HAVE 3:1 SLOPE.

5. ALL MATERIALS, WORKMANSHIP AND INSTALLATION TO MEET THE REQUIREMENTS OF CFR 46 SUBCHAPTER H AND BE TO THE SATISFACTION OF THE USCG OCMI.

5. WELDING REQUIREMENTS ARE FOUND IN THE GENERAL SPECIFICATIONS.

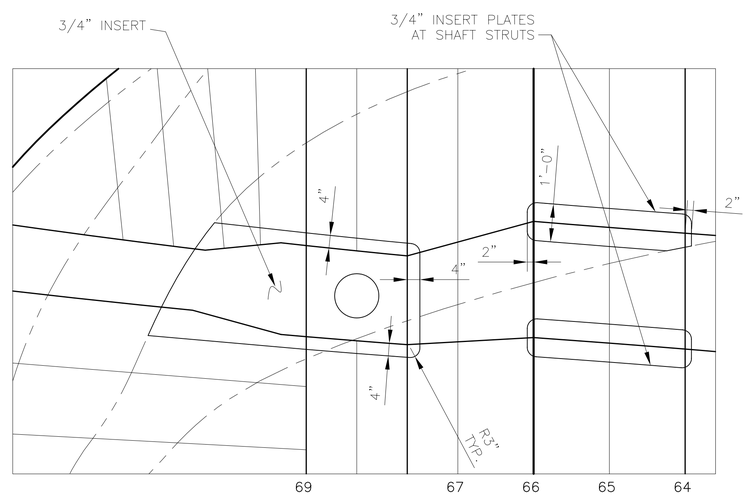

HULL INSERT PLATES DETAIL

SCALE: 1/2" = 1'–0"

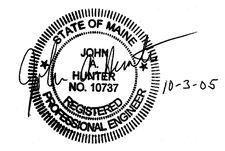

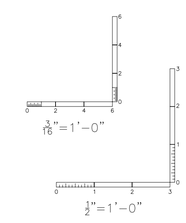

NO.	REFERENCES
4	575–02–100, LINES PLAN
3	575–02–151, SUPERSTRUCTURE SCANTLINGS
2	575–02–131, DECK SCANTLINGS
1	SPECIFICATIONS

APPROVALS:	SUBMIT DATE	APPROVED BY	APPROVED DATE	RE–SUBMIT DATE	APPROVED BY	APPROVED DATE
OWNER	–	–	–	–	–	–
USCG	–	–	–	–	–	–
ABS	–	–	–	–	–	–
USPHS	–	–	–	–	–	–

Seaworthy Systems, Inc.
MARINE ENGINEERS NAVAL ARCHITECTS
P.O. BOX 965
ESSEX, CT 06426
USA
TEL: 860–767–9061
FAX: 860–767–1263

CHECKED BY	AUTH^{D} BY	SCALE
JAH 09–30–05	JAH 08–01–05	AS NOTED
DRAWN BY	ORIG^{L} DATE	
WRP	08–07–05	DIMS IN INCHES UNLESS OTHERWISE STATED

FOR
MAINE STATE FERRY SERVICE
P.O. BOX 645, 517A MAIN STREET
ROCKLAND, ME 04841–0645

TITLE
154' RO/RO/PASS FERRY

STRUCTURE BELOW MAIN DECK

SIZE	DRG No.	REV.	SHEET
D	575–02–111	A	1 OF 18

SSI FILE No. s:\active\projnumb\575–02\575–02–111.dwg

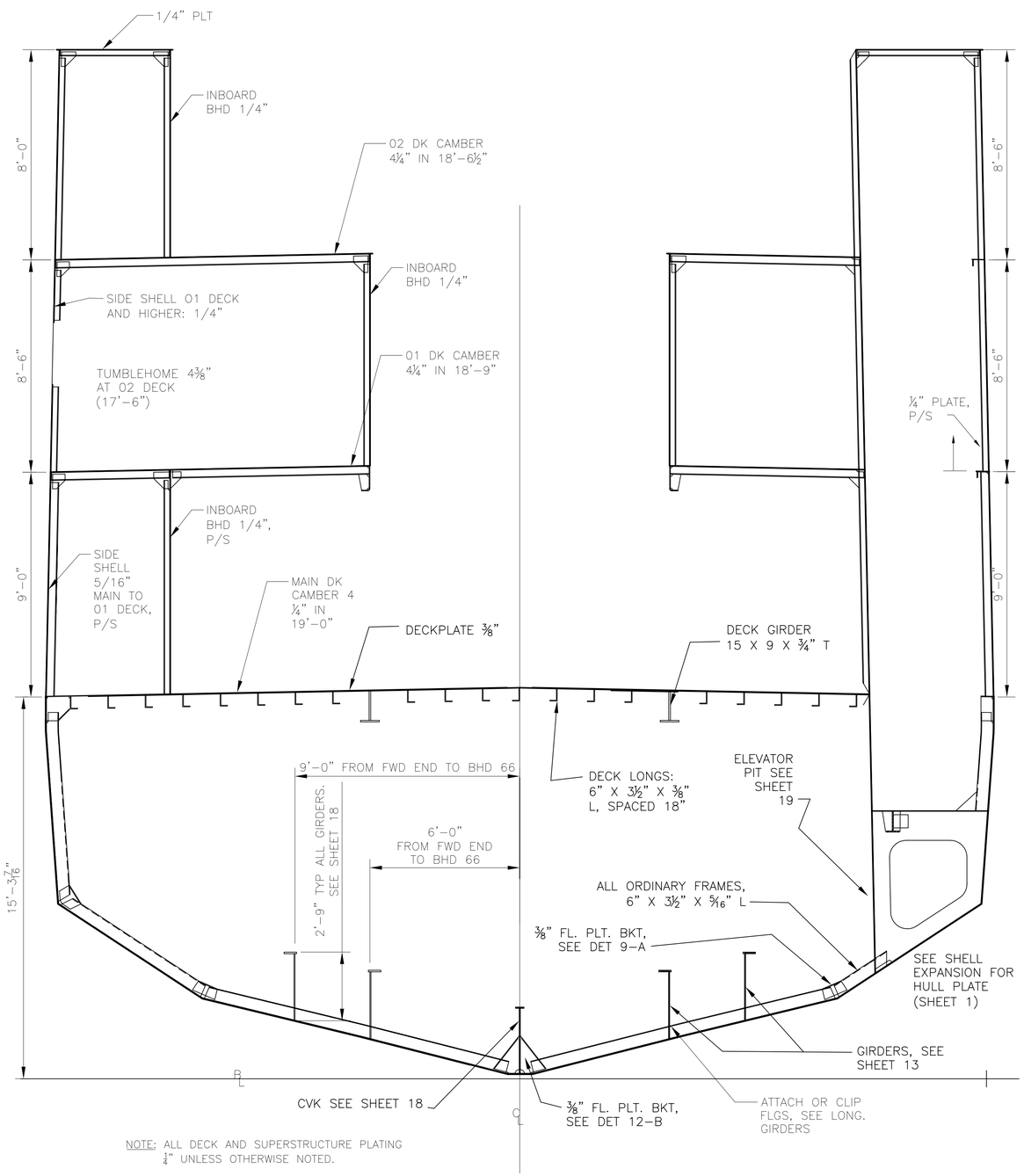

NOTE: ALL DECK AND SUPERSTRUCTURE PLATING ¼" UNLESS OTHERWISE NOTED.

SECTION LKG FWD

FRAME 42, SHOWING TYPICAL ORDINARY FRAME DETAILS

SCALE: 3/8 IN = 1 FT

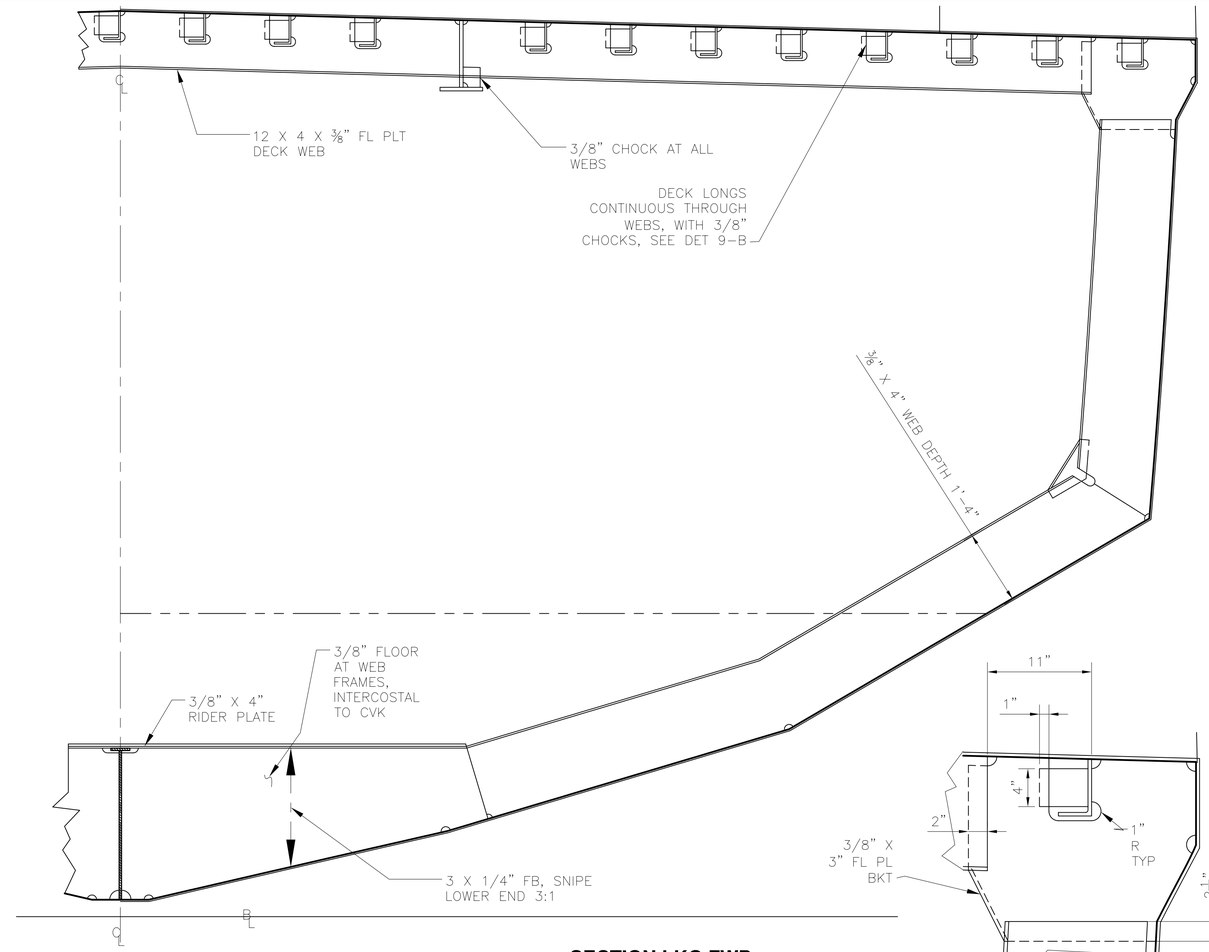

SECTION LKG FWD

FRAME 28, SHOWING TYPICAL WEB FRAME DETAILS

SCALE: 3/4" = 1'-0"

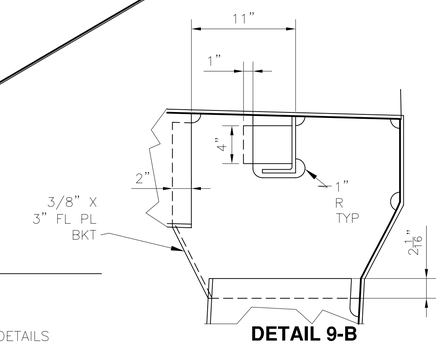

DETAIL 9-B

TYP. WEB FRAME GUNWALE BKT

SCALE: 1-1/2" = 1'-0"

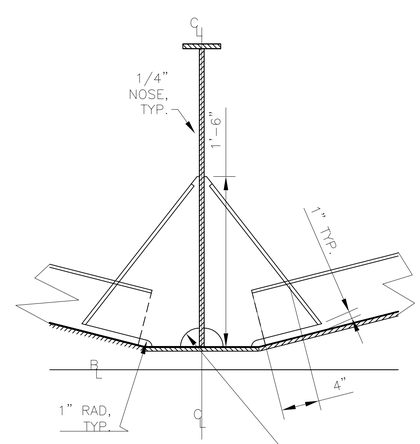

ORINARY BKT AT CVK DETAIL

SCALE: 1-1/2" = 1'-0"

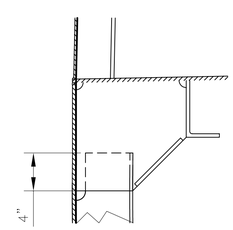

TYP. BKT AT GUNWALE

SCALE: 1-1/2" = 1'-0"

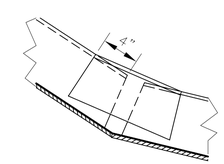

TYP. BKT AT CHINES DETAIL

SCALE: 1-1/2" = 1'-0"

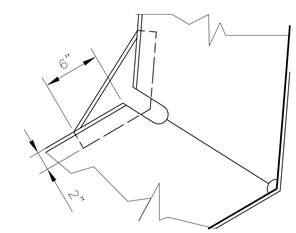

TYP. WEB FRAME BKT DETAIL

SCALE: 1-1/2" = 1'-0"

Seaworthy Systems, Inc.
MARINE ENGINEERS NAVAL ARCHITECTS
P.O. BOX 965
ESSEX, CT 06426
USA
TEL: 860-767-9061
FAX: 860-767-1263

FOR
MAINE STATE FERRY SERVICE
P.O. BOX 645, 517A MAINE ST
ROCKLAND, ME 04841-0645

TITLE 154' RO/RO/PASS FERRY

STRUCTURE BELOW MAIN DECK

SCALE: AS STATED

DIMS IN INCHES UNLESS OTHERWISE STATED

SIZE	DRG No.	REV	SHEET
D	575-02-111	A	2 OF 18

SSI FILE No. s:\active\projnumb\575-02\Drafting\Active\575-02-111.dwg

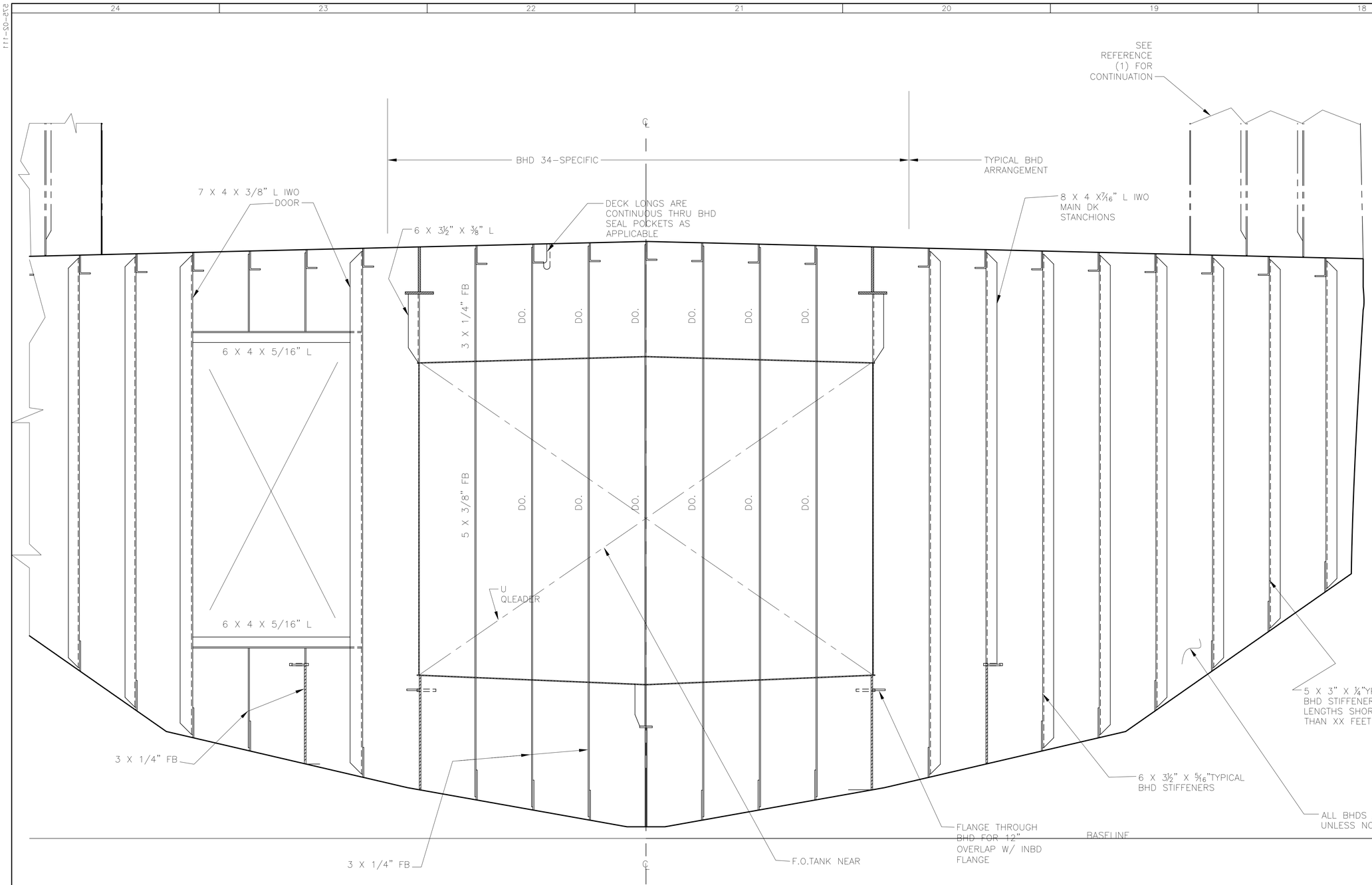

SECTION LKG AFT

BHD 34, SHOWING TYP. BHD DETAILS

SCALE: 3/4" = 1'-0"

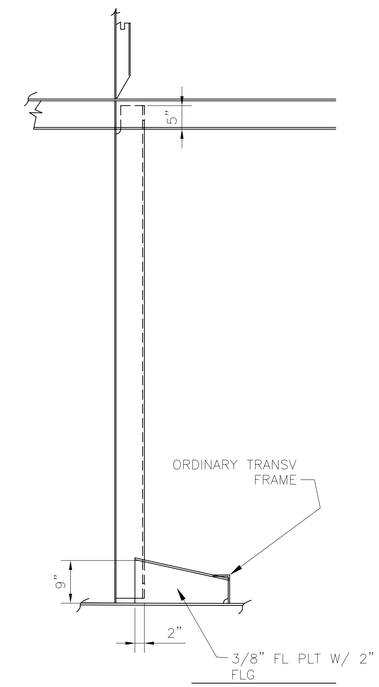

TYP. BHD LONG. END CONNECTION DETAILS

SCALE: 3/4" = 1'-0"

NOTE: SOME BHDS THE "TOE" OF THE AJOINING BOTTOM ORDINARY FRAME IS REVERSED

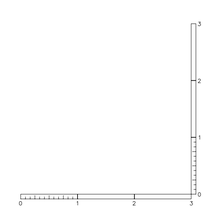

Seaworthy Systems, Inc.
MARINE ENGINEERS NAVAL ARCHITECTS
P.O. BOX 965
ESSEX, CT 06426
USA
TEL: 860-767-9061
FAX: 860-767-1263

FOR
MAINE STATE FERRY SERVICE
P.O. BOX 645, 517A MAINE ST
ROCKLAND, ME 04841-0645

TITLE 154' RO/RO/PASS FERRY

STRUCTURE BELOW MAIN DECK

SCALE		SIZE	DRG No.	REV	SHEET
AS STATED	DIMS IN INCHES UNLESS OTHERWISE STATED	D	575-02-111	A	3 OF 18

SSI FILE No. s:\active\projnumb\575-02\Drafting\Active\575-02-111.dwg

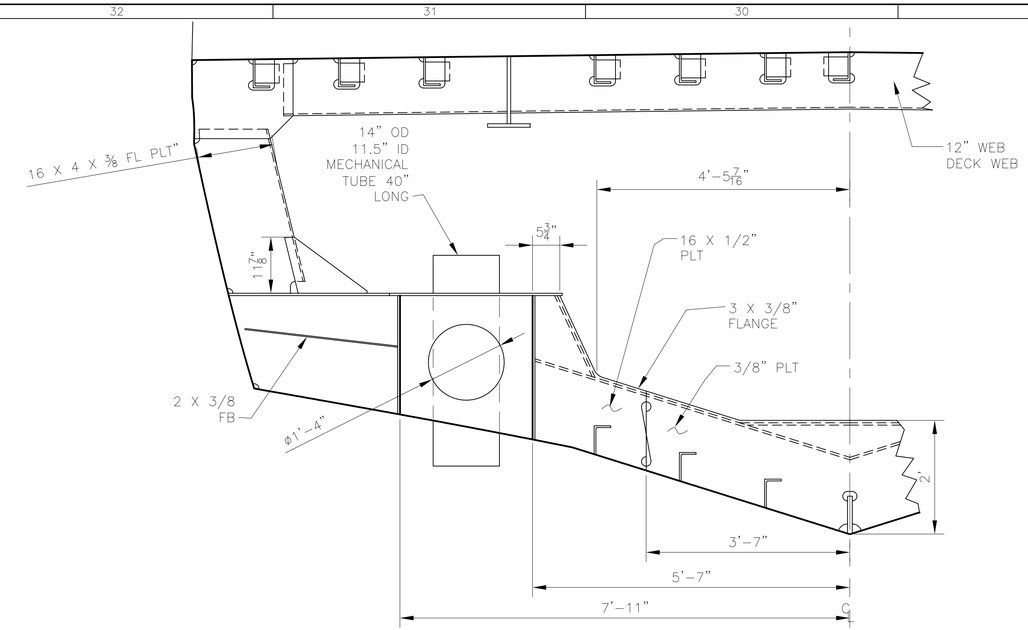

SECTION 30-D LKG FWD

FRAME 69

SCALE: 3/4" = 1'-0"

SEE 26-B FOR ADDITIONAL

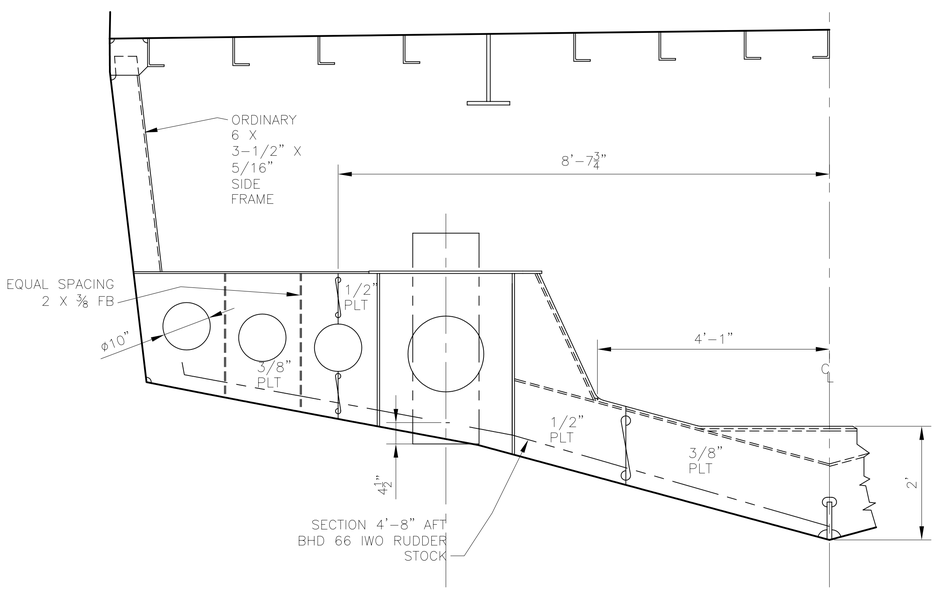

SEE 30-D FOR DETAILS

SECTION 30-A LKG FWD

WEB FRAME 3'-4" AFT BHD 66

SCALE: 3/4" = 1'-0"

SEE 26-B FOR ADDITIONAL

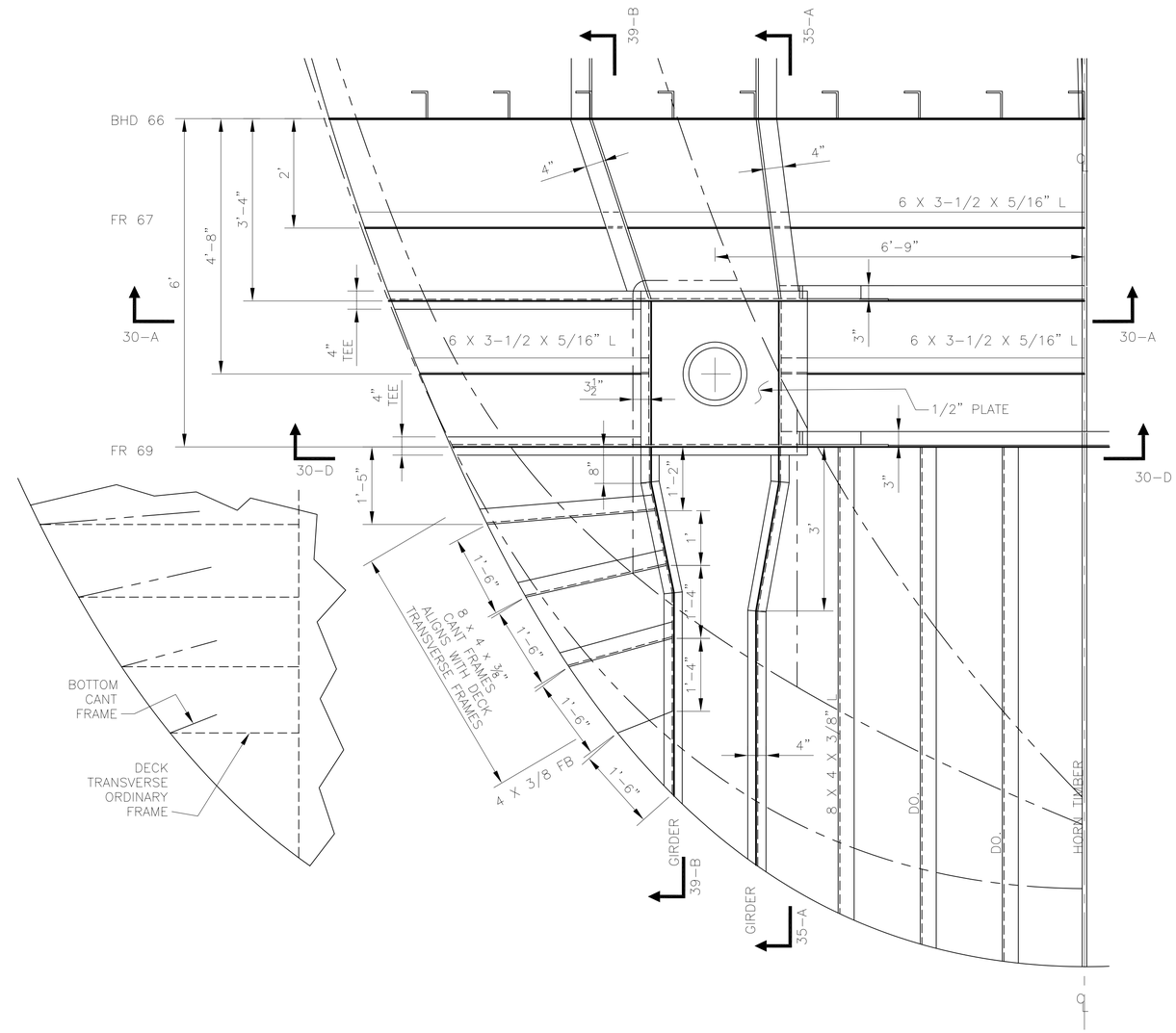

KEY PLAN 26-B

BOTTOM FRAMING IWO RUDDER STOCK

SCALE: 3/4" = 1'-0"

Seaworthy Systems, Inc.
MARINE ENGINEERS NAVAL ARCHITECTS
P.O. BOX 965
ESSEX, CT 06426
USA
TEL: 860-767-9061
FAX: 860-767-1263

FOR

MAINE STATE FERRY SERVICE
P.O. BOX 645, 517A MAINE ST
ROCKLAND, ME 04841-0645

TITLE 154' RO/RO/PASS FERRY

STRUCTURE BELOW MAIN DECK

SCALE: AS STATED

DIMS IN INCHES UNLESS OTHERWISE STATED

SIZE	DRG No.	REV	SHEET
D	575-02-111	A	4 OF 18

SSI FILE No. s:\active\projnumb\575-02\Drafting\Active\575-02-111.dwg

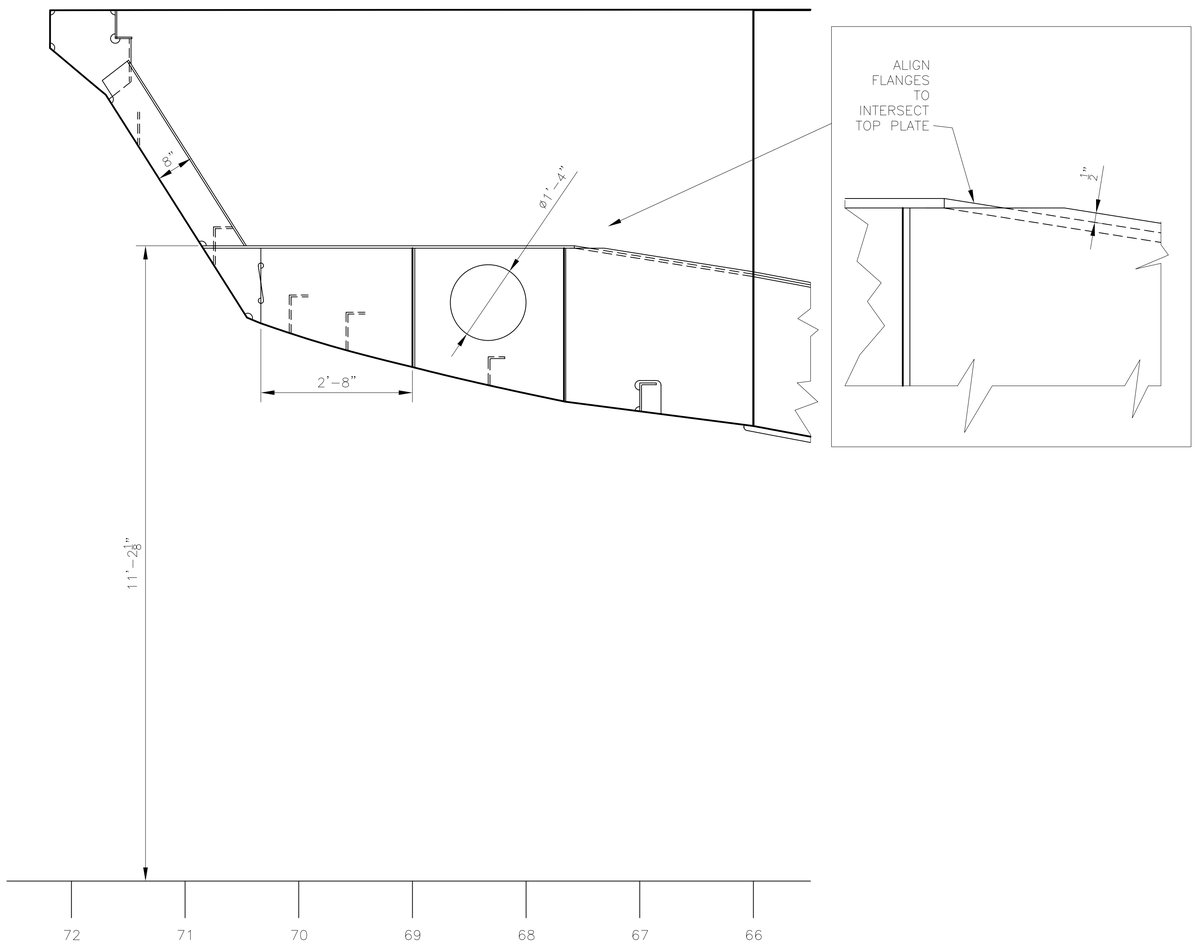

PORT LKG OUTBD

OUTBD. GIRDER DETAILS

SCALE: 3/4" = 1'-0"

SEE 26-B FOR ADDITIONAL

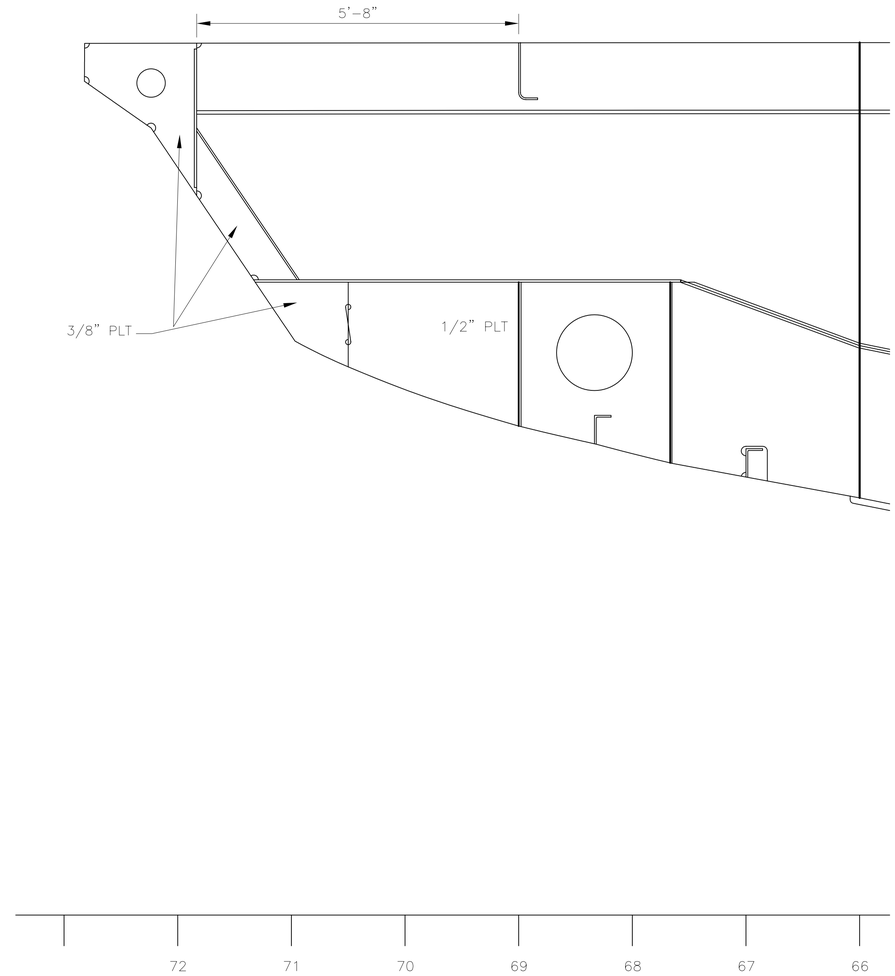

PORT LKG OUTBD

INBOARD GIRDER DETAILS AFT

SCALE: 3/4" = 1'-0"

SEE 26-B FOR ADDITIONAL

Seaworthy Systems, Inc.
MARINE ENGINEERS NAVAL ARCHITECTS
P.O. BOX 965
ESSEX, CT 06426
USA
TEL: 860-767-9061
FAX: 860-767-1263

FOR

MAINE STATE FERRY SERVICE
P.O. BOX 645, 517A MAINE ST
ROCKLAND, ME 04841-0645

TITLE 154' RO/RO/PASS FERRY

STRUCTURE BELOW MAIN DECK

SCALE: AS STATED

DIMS IN INCHES UNLESS OTHERWISE STATED

SIZE	DRG No.	REV.	SHEET
D	575-02-111	A	5 OF 18

SSI FILE No. s:\active\projnumb\575-02\Drafting\Active\575-02-111.dwg

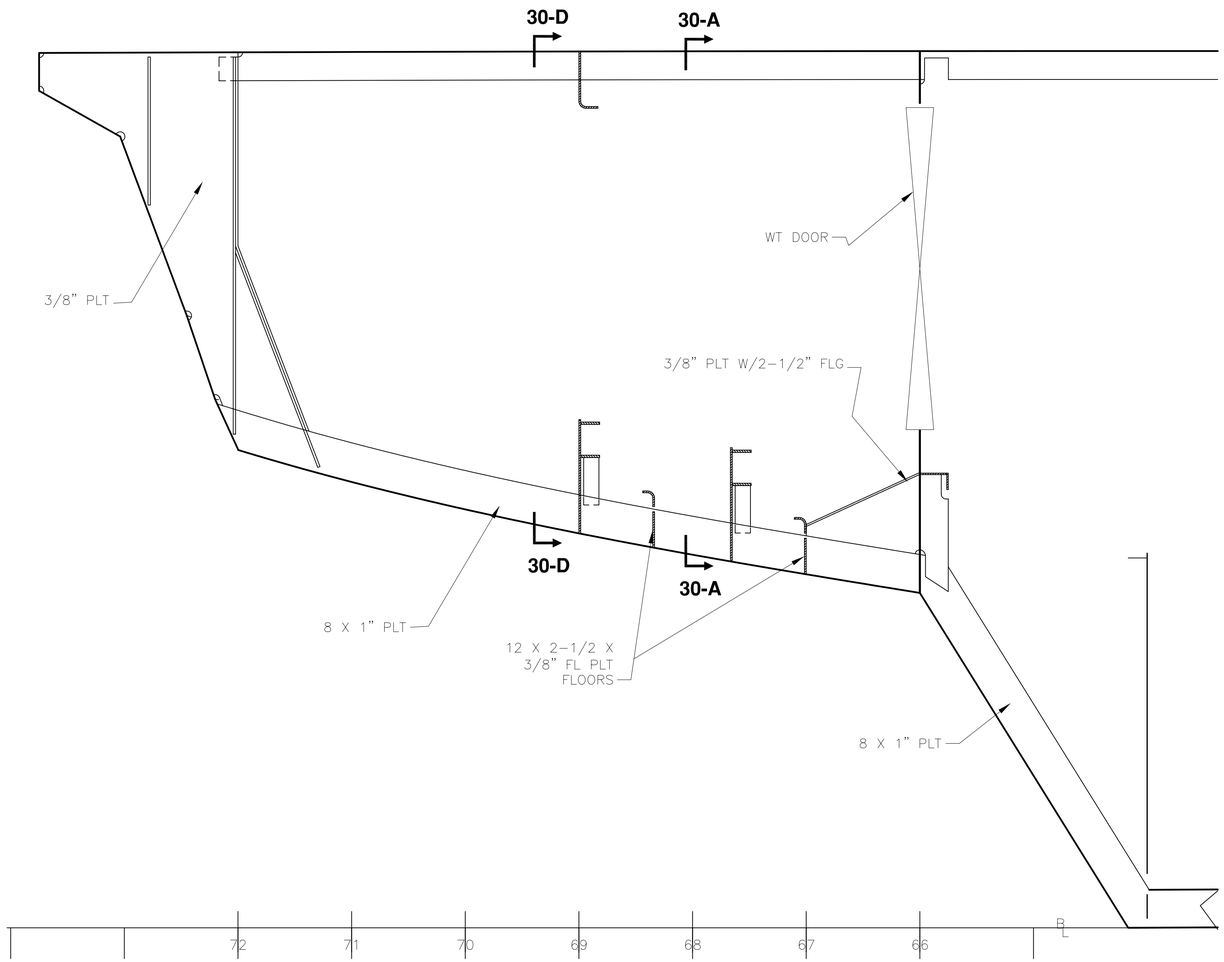

ELEVATION VIEW

CENTERLINE ELEVATION DETAIL

SCALE: 3/4" = 1'-0"

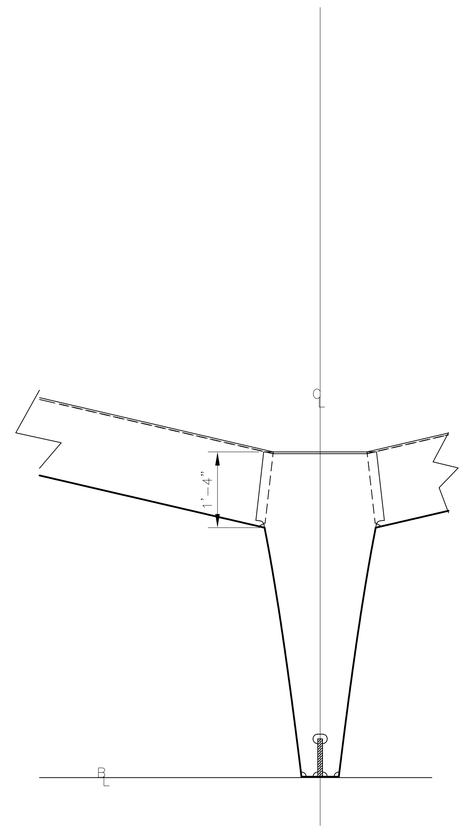

SECTION LKG FWD

FRAME 61 SHOWING TYP AFT WEB FRAME

SCALE: 3/4" = 1'-0"

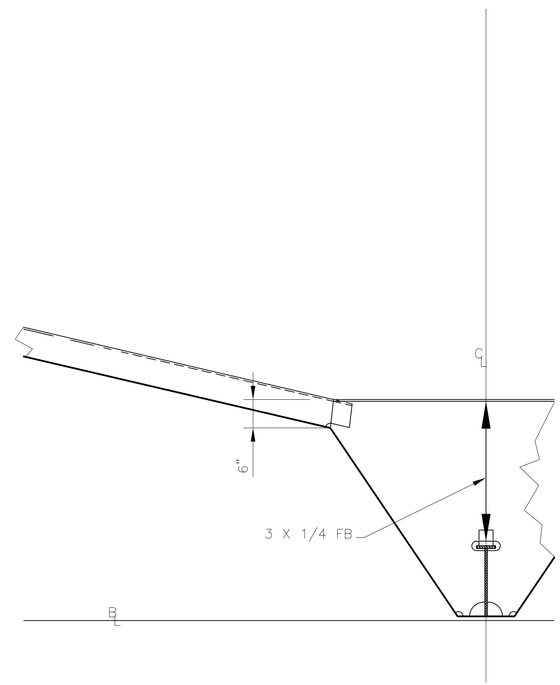

SECTION 41-A LKG FWD

FRAME 56, SHOWING TYP. AFT ORDINARY FRAME

SCALE: 3/4" = 1'-0"

Seaworthy Systems, Inc.
MARINE ENGINEERS NAVAL ARCHITECTS
P.O. BOX 965
ESSEX, CT 06426
USA
TEL: 860-767-9061
FAX: 860-767-1263

FOR

MAINE STATE FERRY SERVICE

P.O. BOX 645, 517A MAINE ST
ROCKLAND, ME 04841-0645

TITLE 154' RO/RO/PASS FERRY

STRUCTURE BELOW MAIN DECK

SCALE: AS STATED

DIMS IN INCHES UNLESS OTHERWISE STATED

SIZE	DRG No.	REV	SHEET
D	575-02-111	A	6 OF 18

SSI FILE No. s:\active\projnumb\575-02\Drafting\Active\575-02-111.dwg

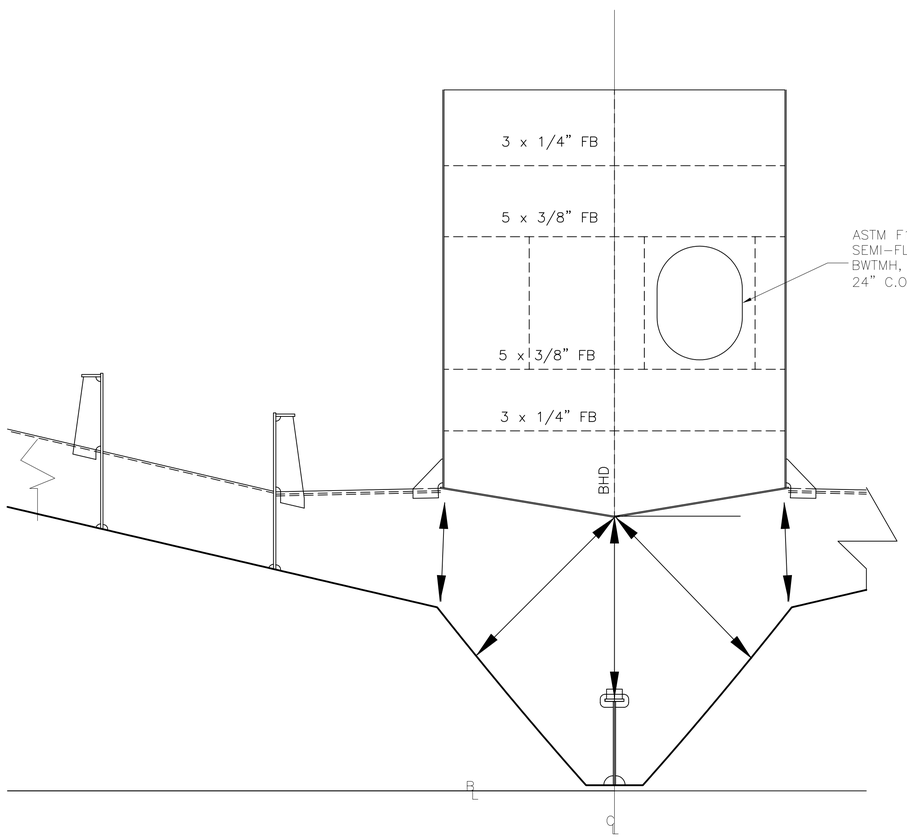

SECTION LKG FWD

FRAME 55

SCALE: 3/4" = 1'-0"

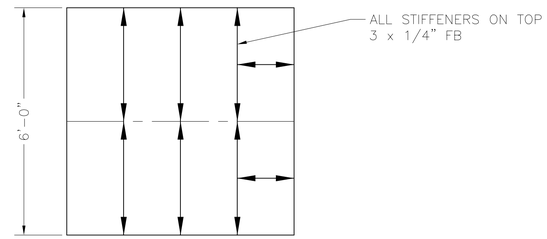

TANK TOP

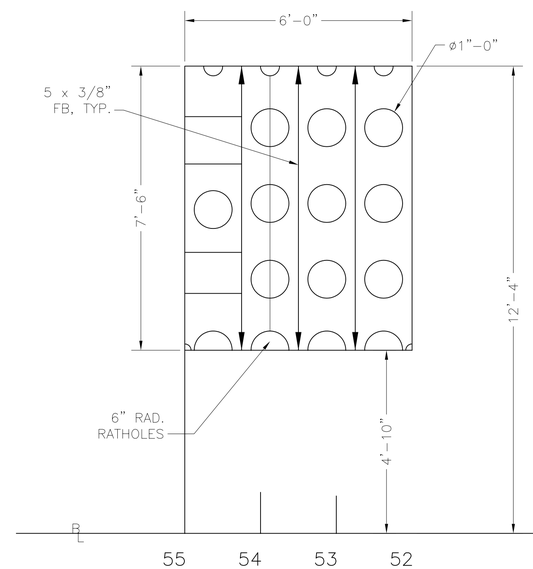

TANK CL BULKHEAD

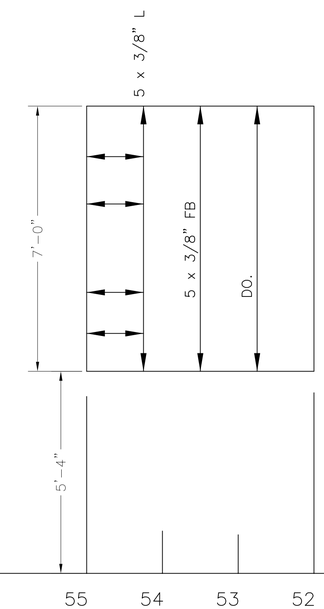

TANK OUTBD BHD

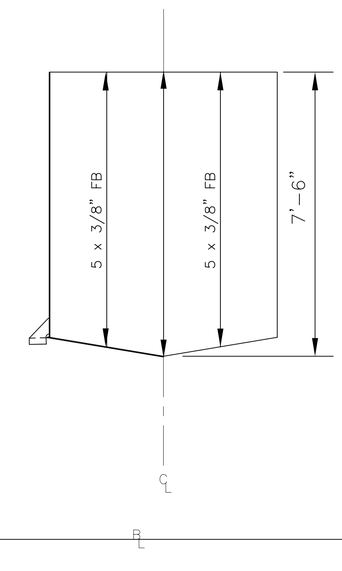

TANK END BHD

ALL PLATE ¼"

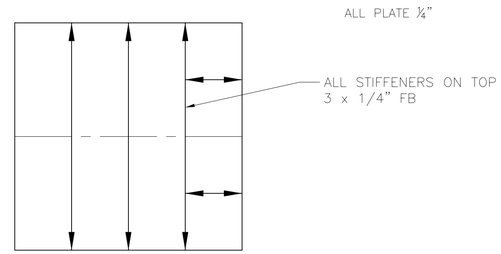

TANK BOTTOM

DETAIL VIEW

POTABLE WATER TANK. SEWAGE TANK IDENTICAL CONSTRUCTION

SCALE: 1/2" = 1'-0"

Seaworthy Systems, Inc.
MARINE ENGINEERS NAVAL ARCHITECTS
P.O. BOX 965
ESSEX, CT 06426
USA
TEL: 860-767-9061
FAX: 860-767-1263

FOR

MAINE STATE FERRY SERVICE
P.O. BOX 645, 517A MAINE ST
ROCKLAND, ME 04841-0645

TITLE 154' RO/RO/PASS FERRY

STRUCTURE BELOW MAIN DECK

SCALE		SIZE	DRG No.	REV	SHEET
AS STATED	DIMS IN INCHES UNLESS OTHERWISE STATED	D	575-02-111	A	7 OF 18

SSI FILE No. s:\active\projnumb\575-02\Drafting\Active\575-02-111.dwg

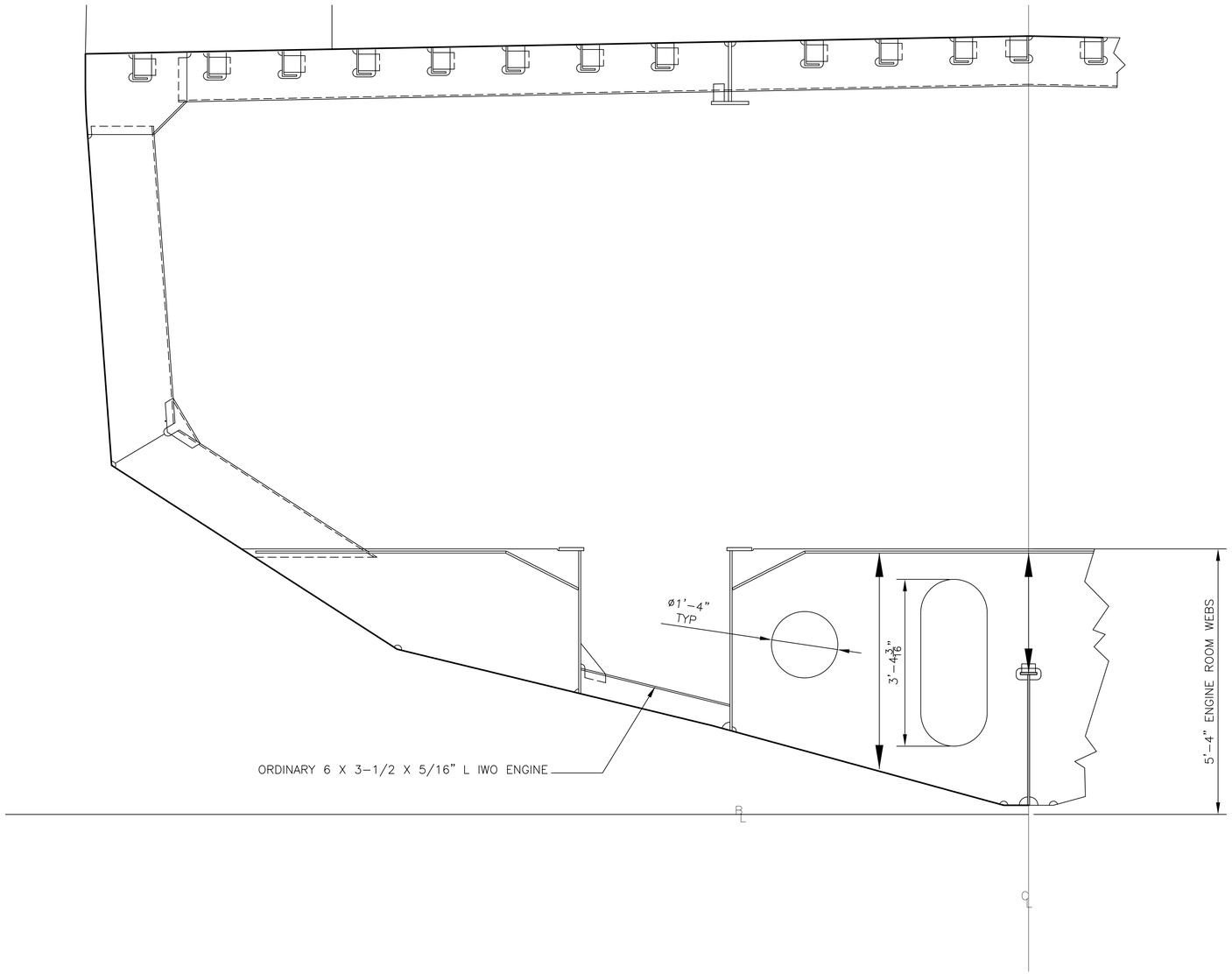

SECTION LKG FWD

FRAME 43

SCALE: 3/4" = 1'-0"

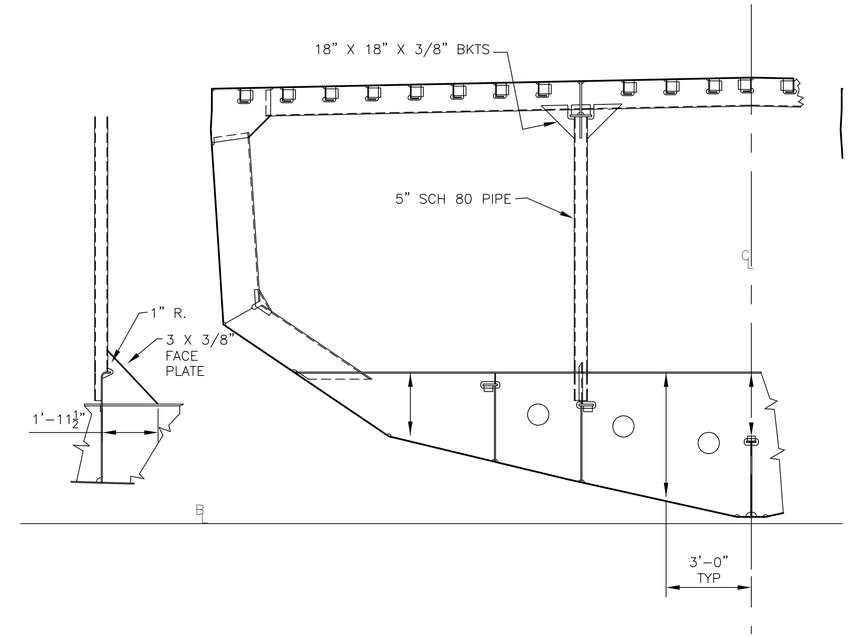

VIEW LKG FWD

FRAME 40

SCALE: 3/8" = 1'-0"

Seaworthy Systems, Inc.
MARINE ENGINEERS
NAVAL ARCHITECTS
P.O. BOX 965
ESSEX, CT 06426
USA
TEL: 860-767-9061
FAX: 860-767-1263

FOR
MAINE STATE FERRY SERVICE
P.O. BOX 645, 517A MAINE ST
ROCKLAND, ME 04841-0645

TITLE 154' RO/RO/PASS FERRY

STRUCTURE BELOW MAIN DECK

SCALE		SIZE	DRG No.	REV	SHEET
AS STATED	DIMS IN INCHES UNLESS OTHERWISE STATED	D	575-02-111	A	8 OF 18

SSI FILE No. s:\active\projnumb\575-02\Drafting\Active\575-02-111.dwg

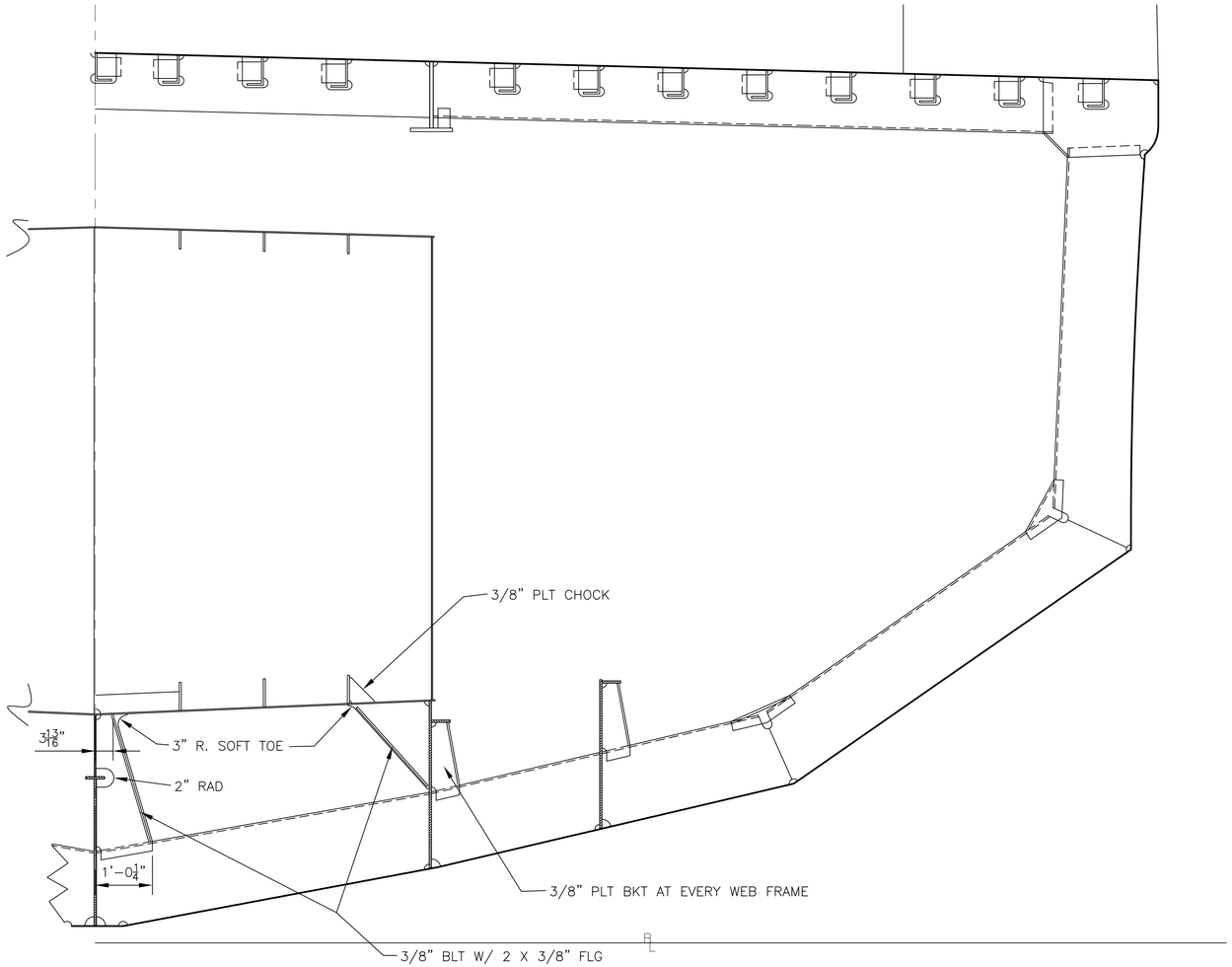

SECTION LKG AFT

FRAME 31

SCALE: 3/4" = 1'-0"

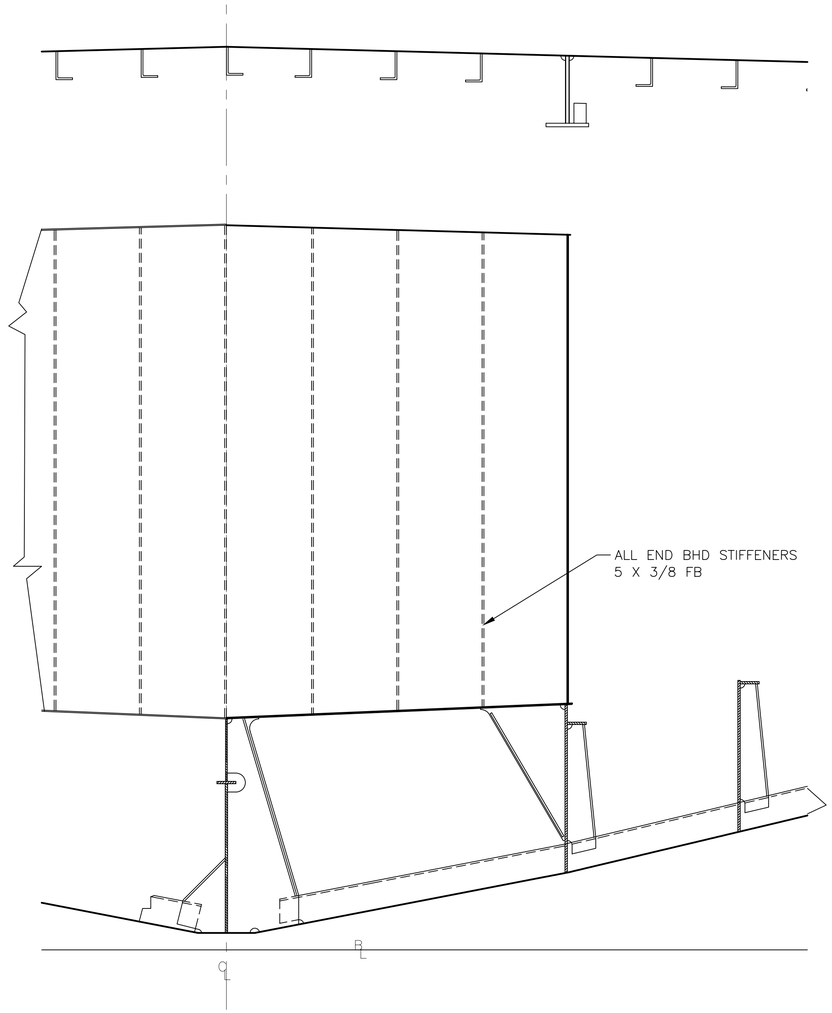

VIEW LKG AFT

FRAME 30

SCALE: 3/4" = 1'-0"

BKT SCANTLINGS SIM TO FR 31

Seaworthy Systems, Inc.
MARINE ENGINEERS
NAVAL ARCHITECTS
P.O. BOX 965
ESSEX, CT 06426
USA
TEL: 860-767-9061
FAX: 860-767-1263

FOR

MAINE STATE FERRY SERVICE
P.O. BOX 645, 517A MAINE ST
ROCKLAND, ME 04841-0645

TITLE 154' RO/RO/PASS FERRY

STRUCTURE BELOW MAIN DECK

SCALE: AS STATED

DIMS IN INCHES UNLESS OTHERWISE STATED

SIZE	DRG No.	REV	SHEET
D	575-02-111	A	9 OF 18

SSI FILE No. s:\active\projnumb\575-02\Drafting\Active\575-02-111.dwg

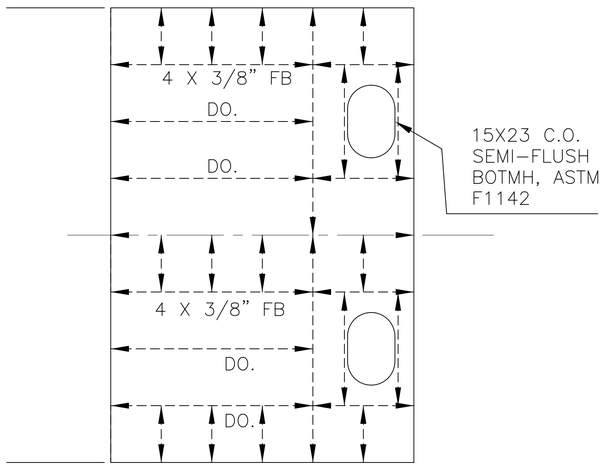

Tank Top

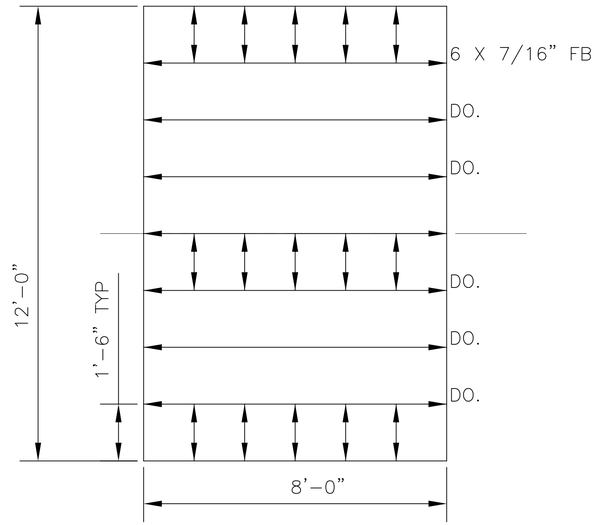

Tank Bottom

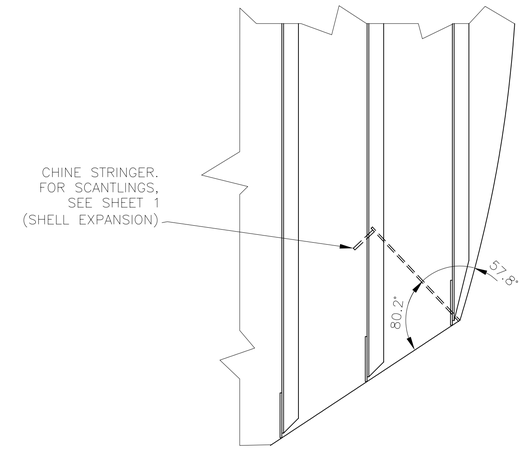

74-C, LKG FWD

CHINE STRINGER AT BHD 25

SCALE: 3/4" = 1'-0"

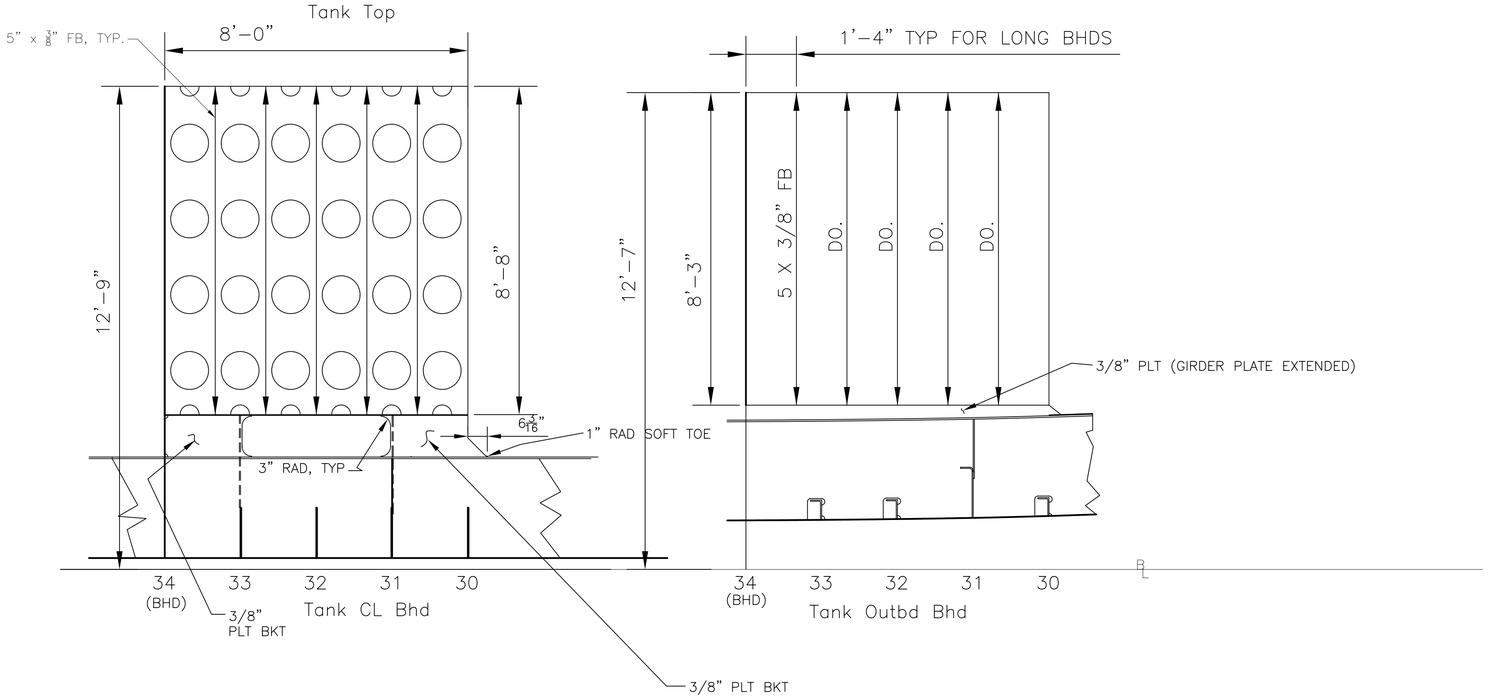

DIESEL OIL TANK DETAIL

SCALE: 1/2" = 1'-0"

NOTES REGARDING FUEL TANK:

1. ALL PLATE IS 1/4" THICK.

2. NO LAP JOINTS PERMITTED. ALL STIFFENERS TO BE BUT-WELDED.

3. INSTALL 4" X 4" SOFT TOE (1" RADIUS) BKTS TO EACH STIFFENER JOINT IN THE LOWER PORTION OF THE TANK.

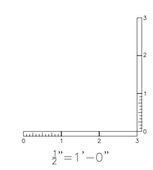

Seaworthy Systems, Inc.
MARINE ENGINEERS NAVAL ARCHITECTS
P.O. BOX 965
ESSEX, CT 06426
USA
TEL: 860-767-9061
FAX: 860-767-1263

FOR
MAINE STATE FERRY SERVICE
P.O. BOX 645, 517A MAINE ST
ROCKLAND, ME 04841-0645

TITLE 154' RO/RO/PASS FERRY

STRUCTURE BELOW MAIN DECK

SCALE		SIZE	DRG No.	REV.	SHEET
AS STATED	DIMS IN INCHES UNLESS OTHERWISE STATED	D	575-02-111	A	10 OF 18

SSI FILE No. s:\active\projnumb\575-02\Drafting\Active\575-02-111.dwg

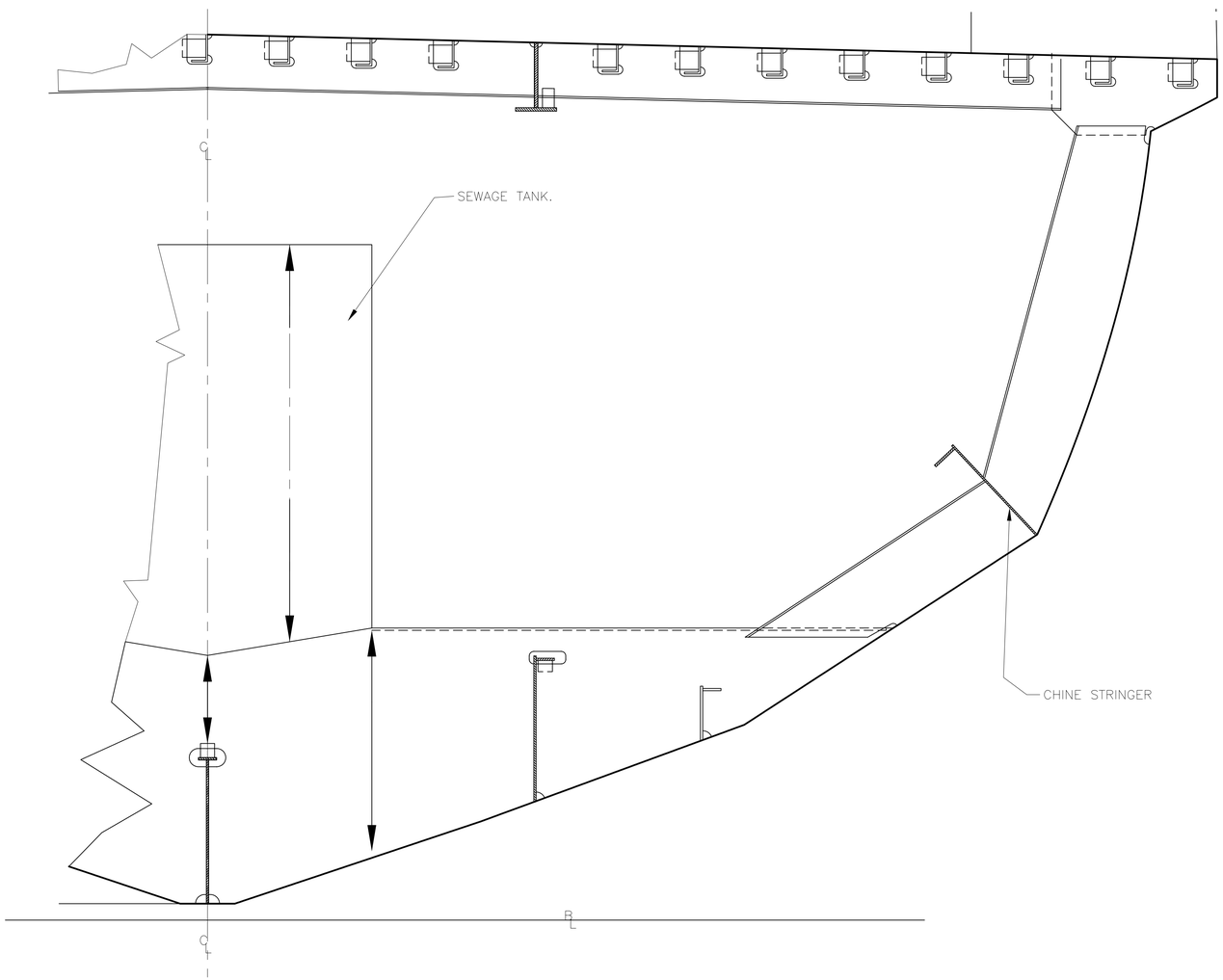

SECTION LKG AFT
FRAME 31
SCALE: 3/4" = 1'-0"

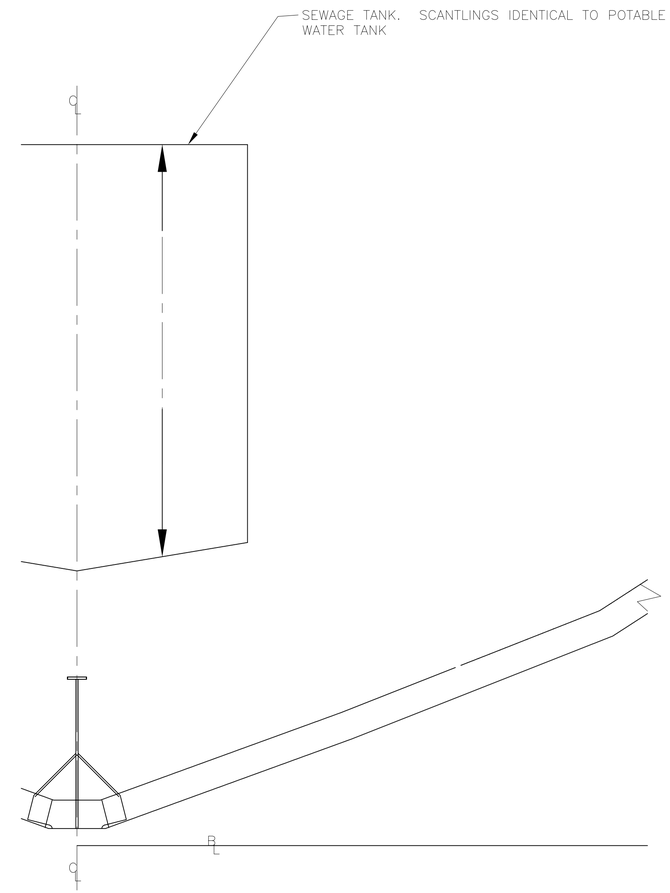

VIEW LKG AFT
FRAME 30
SCALE: 3/4" = 1'-0"

Seaworthy Systems, Inc.
MARINE ENGINEERS NAVAL ARCHITECTS
P.O. BOX 965
ESSEX, CT 06426
USA
TEL: 860-767-9061
FAX: 860-767-1263

FOR
MAINE STATE FERRY SERVICE
P.O. BOX 645, 517A MAINE ST
ROCKLAND, ME 04841-0645

TITLE 154' RO/RO/PASS FERRY

STRUCTURE BELOW MAIN DECK

SCALE: AS STATED

DIMS IN INCHES UNLESS OTHERWISE STATED

SIZE	DRG No.	REV	SHEET
D	575-02-111	A	11 OF 18

SSI FILE No. s:\active\projnumb\575-02\Drafting\Active\575-02-111.dwg

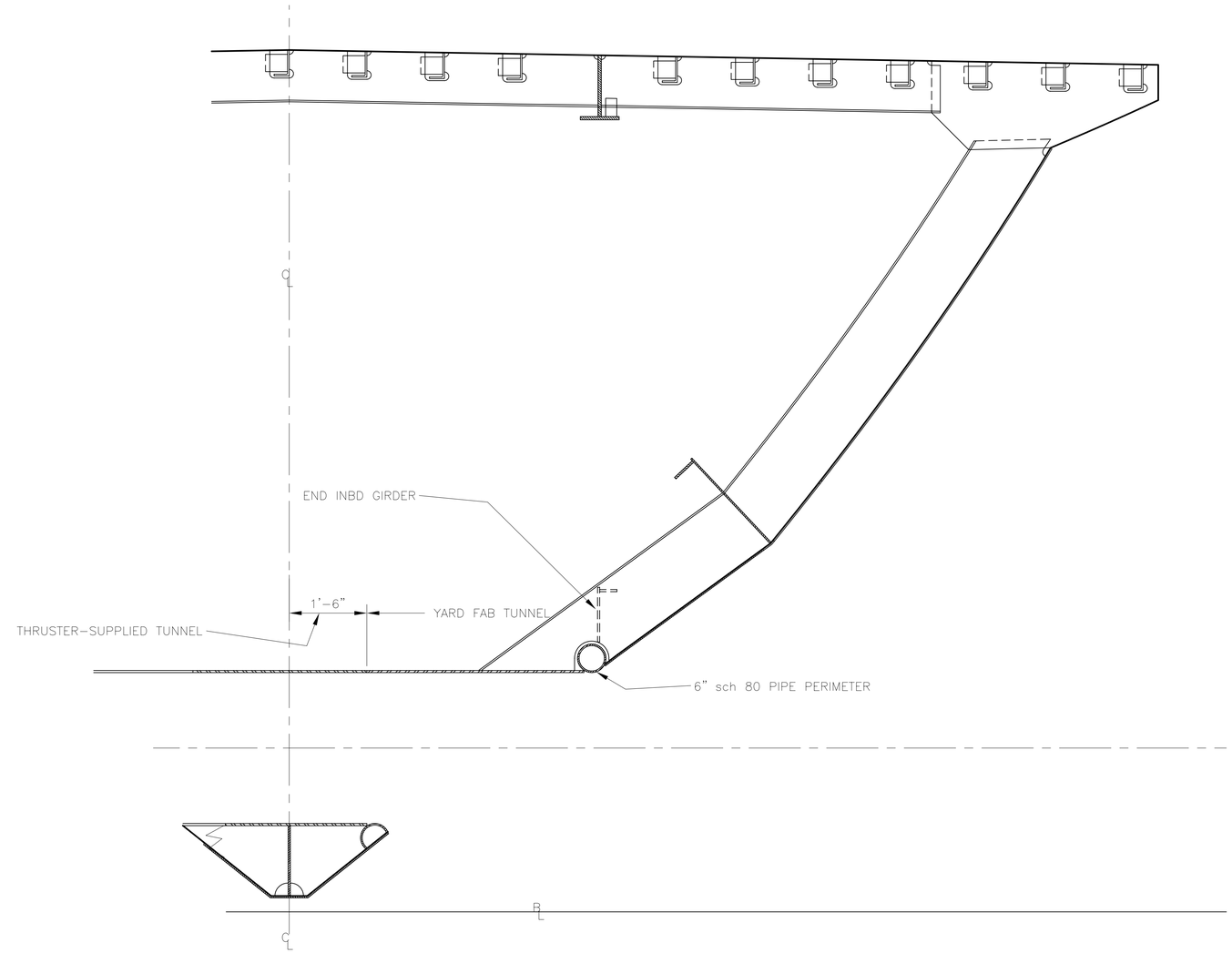

SECTION LKG AFT

FRAME 13: BOW THRUSTER

SCALE: 3/4" = 1'-0"

Seaworthy Systems, Inc.
MARINE ENGINEERS NAVAL ARCHITECTS
P.O. BOX 965
ESSEX, CT 06426
USA
TEL: 860-767-9061
FAX: 860-767-1263

FOR

MAINE STATE FERRY SERVICE
P.O. BOX 645, 517A MAINE ST
ROCKLAND, ME 04841-0645

TITLE 154' RO/RO/PASS FERRY

STRUCTURE BELOW MAIN DECK

SCALE		SIZE	DRG No.	REV	SHEET
AS STATED	DIMS IN INCHES UNLESS OTHERWISE STATED	D	575-02-111	A	12 OF 18

SSI FILE No. s:\active\projnumb\575-02\Drafting\Active\575-02-111.dwg

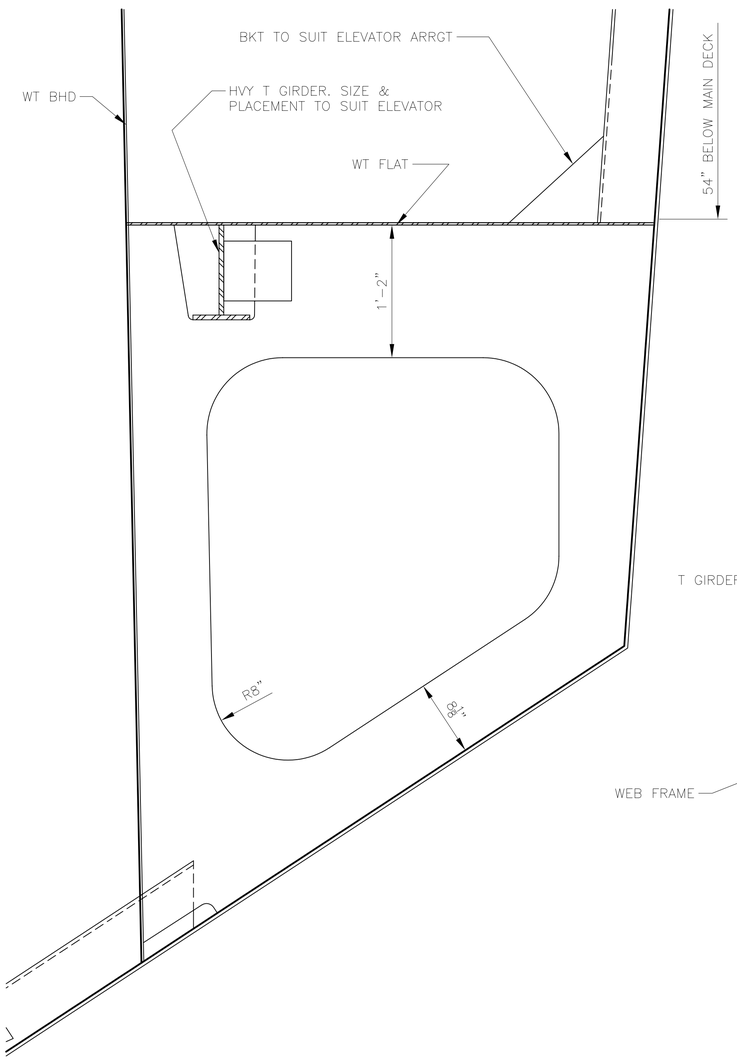

SECTION LKG FWD
FRAME 42 IWO ELEVATOR TRUNK
SCALE: 1-1/2" = 1'-0"

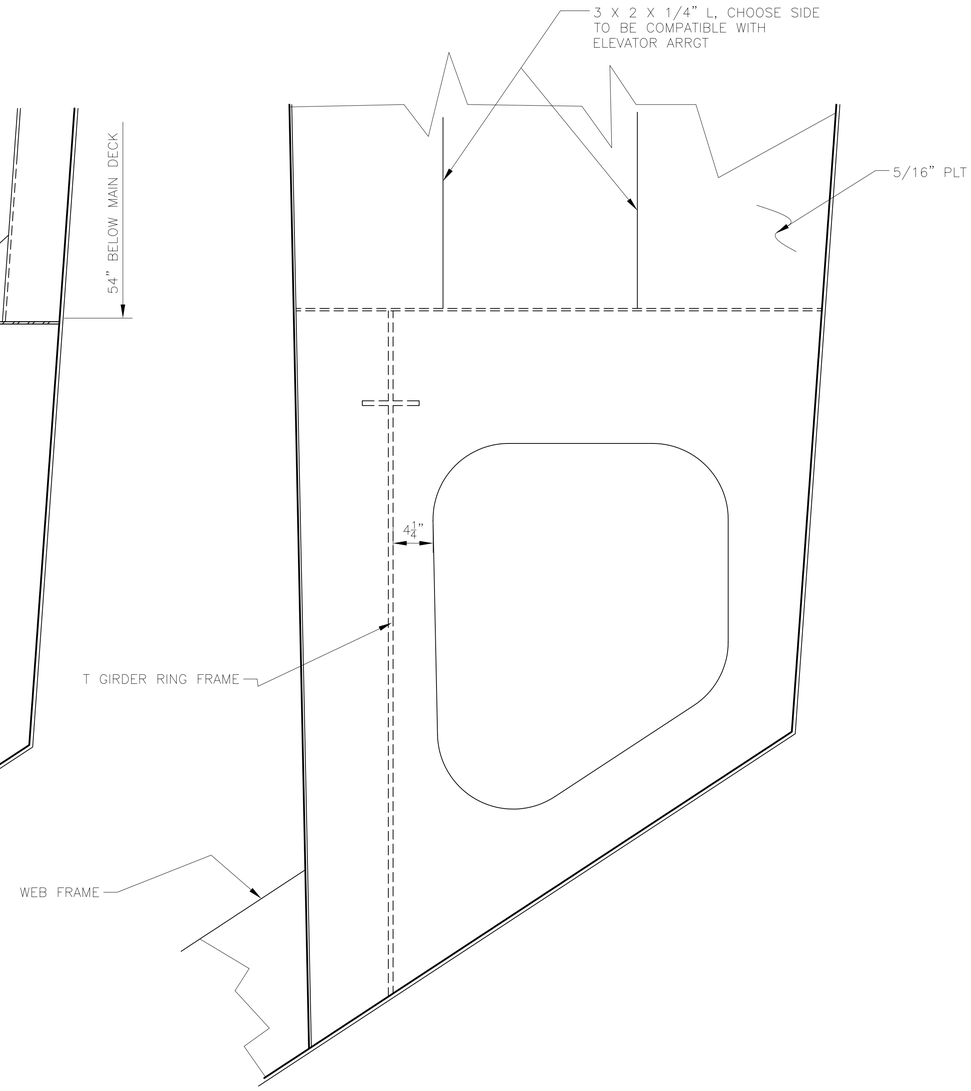

SECTION LKG FWD
FRAME 40 OR 43 IWO ELEV. TRUNK
SCALE: 1-1/2" = 1'-0"

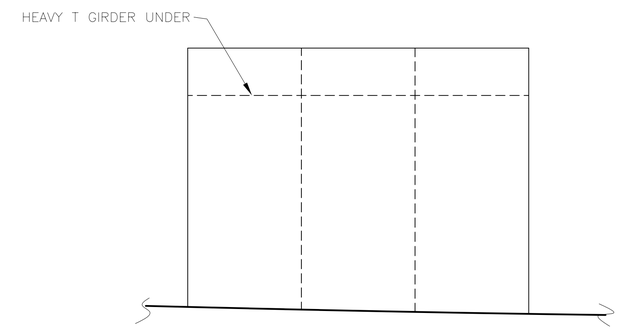

PLAN VIEW 98-D
ELEVATOR PIT FLAT
SCALE: 3/4" = 1'-0"

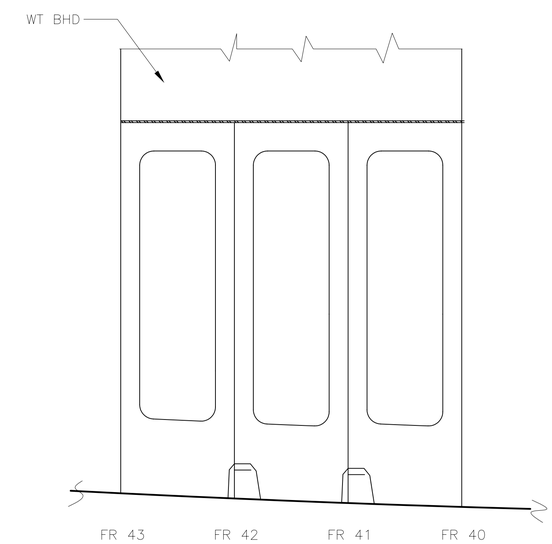

ELEVATION VIEW
ELEVATOR INBD BHD, LOOKING TO PORT
SCALE: 3/4" = 1'-0"

Seaworthy Systems, Inc.
MARINE ENGINEERS NAVAL ARCHITECTS
P.O. BOX 965
ESSEX, CT 06426
USA
TEL: 860-767-9061
FAX: 860-767-1263

FOR
MAINE STATE FERRY SERVICE
P.O. BOX 645, 517A MAINE ST
ROCKLAND, ME 04841-0645

TITLE 154' RO/RO/PASS FERRY

STRUCTURE BELOW MAIN DECK

SCALE: AS STATED

DIMS IN INCHES UNLESS OTHERWISE STATED

SIZE	DRG No.	REV	SHEET
D	575-02-111	A	13 OF 18

SSI FILE No. s:\active\projnumb\575-02\Drafting\Active\575-02-111.dwg

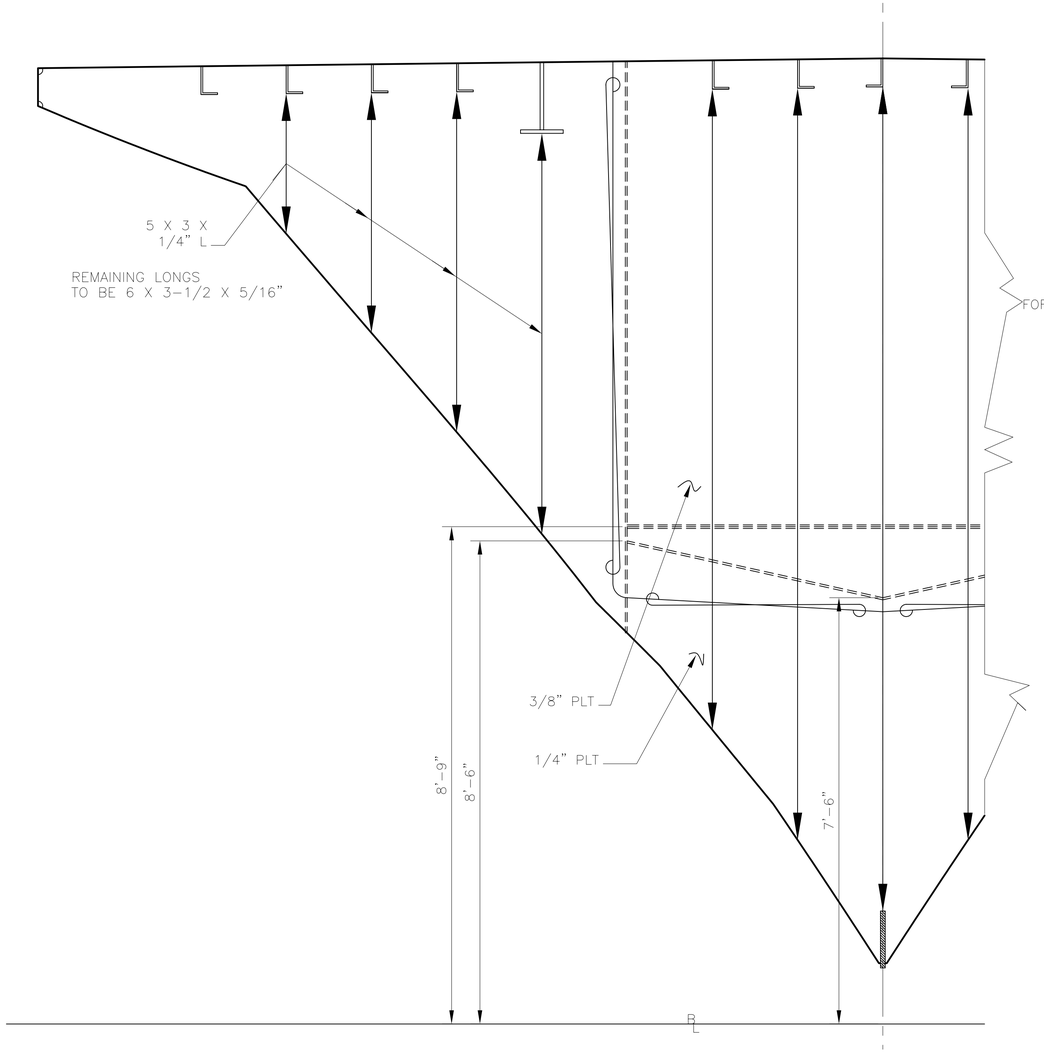

SECTION LKG FWD

FRAME 7

SCALE: 3/4" = 1'-0"

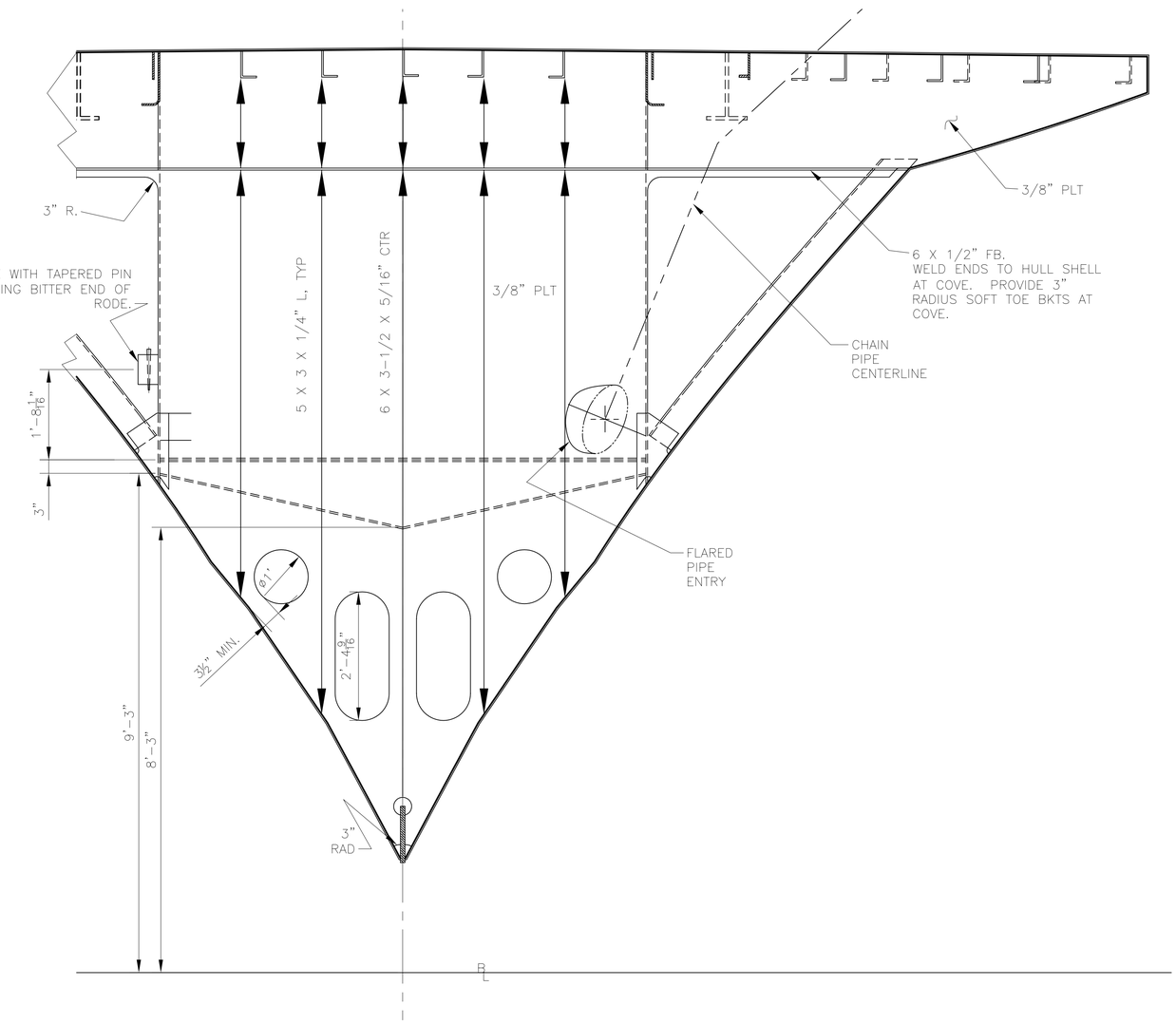

SECTION LKG AFT

FRAME 5

SCALE: 3/4" = 1'-0"

Seaworthy Systems, Inc.
MARINE ENGINEERS
NAVAL ARCHITECTS
P.O. BOX 965
ESSEX, CT 06426
USA
TEL: 860-767-9061
FAX: 860-767-1263

FOR

MAINE STATE FERRY SERVICE
P.O. BOX 645, 517A MAINE ST
ROCKLAND, ME 04841-0645

TITLE 154' RO/RO/PASS FERRY

STRUCTURE BELOW MAIN DECK

SCALE: AS STATED

DIMS IN INCHES UNLESS OTHERWISE STATED

SIZE	DRG No.	REV.	SHEET
D	575-02-111	A	14 OF 18

SSI FILE No. s:\active\projnumb\575-02\Drafting\Active\575-02-111.dwg

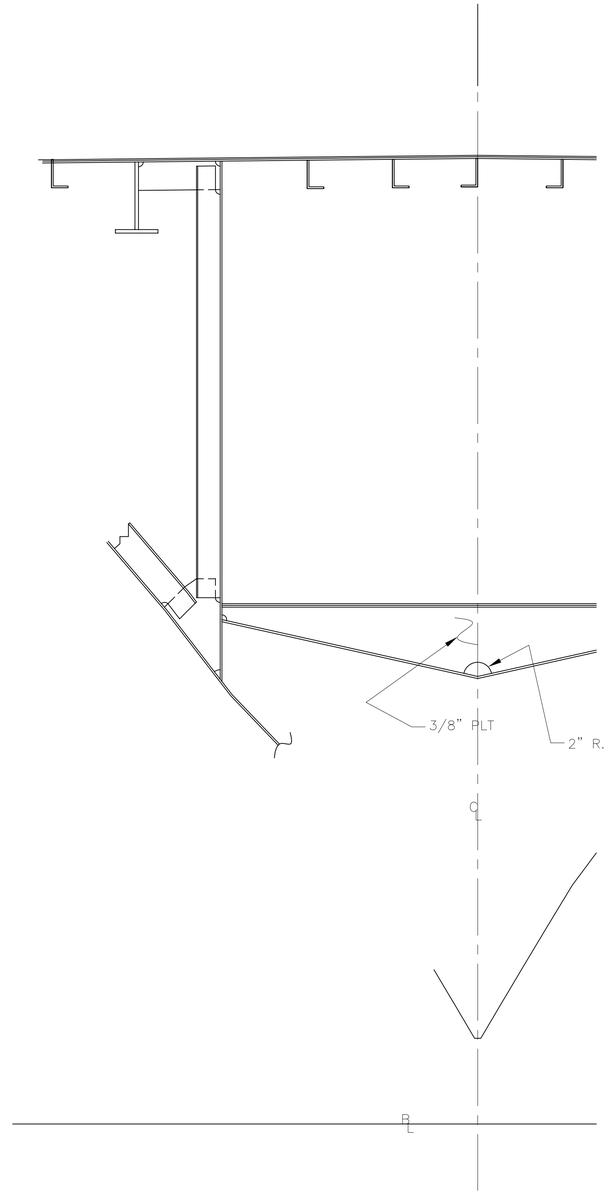

SECTION LKG FWD

FRAME 6

SCALE: 3/4" = 1'-0"

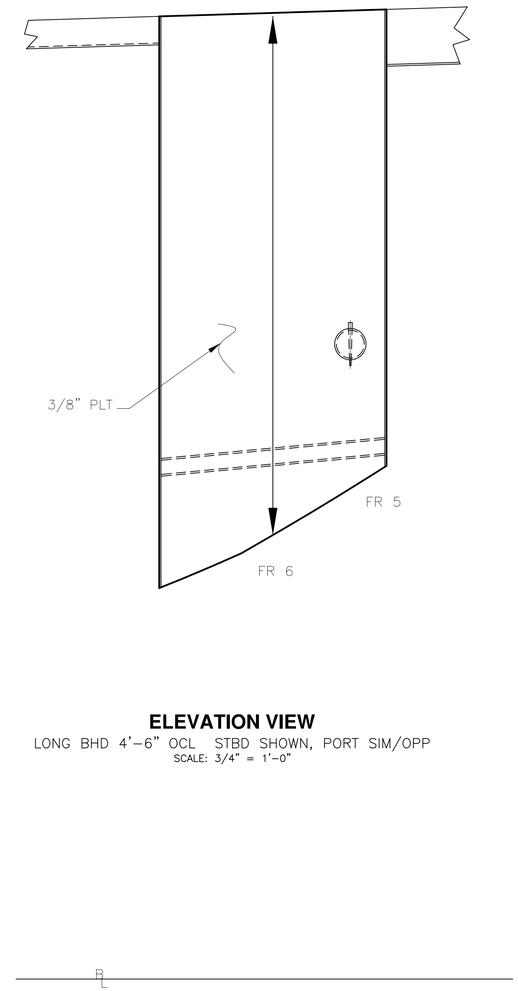

ELEVATION VIEW

LONG BHD 4'-6" OCL STBD SHOWN, PORT SIM/OPP

SCALE: 3/4" = 1'-0"

Seaworthy Systems, Inc.

MARINE ENGINEERS NAVAL ARCHITECTS

P.O. BOX 965
ESSEX, CT 06426
USA
TEL: 860-767-9061
FAX: 860-767-1263

FOR

MAINE STATE FERRY SERVICE
P.O. BOX 645, 517A MAINE ST
ROCKLAND, ME 04841-0645

TITLE 154' RO/RO/PASS FERRY

STRUCTURE BELOW MAIN DECK

SCALE: AS STATED

DIMS IN INCHES UNLESS OTHERWISE STATED

SIZE	DRG No.	REV.	SHEET
D	575-02-111	A	15 OF 18

SSI FILE No. s:\active\projnumb\575-02\Drafting\Active\575-02-111.dwg

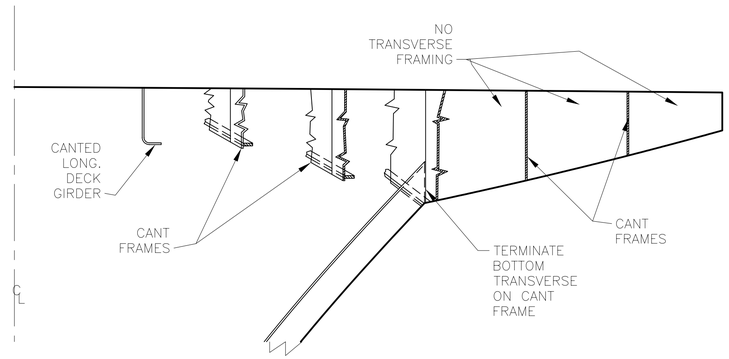

SECTION LKG AFT

FRAME 3 SHOWING TREATMENT OF BOTTOM ORDINARY FRAMES IWO DECK CANT FRAMES

SCALE: 3/4" = 1'-0"

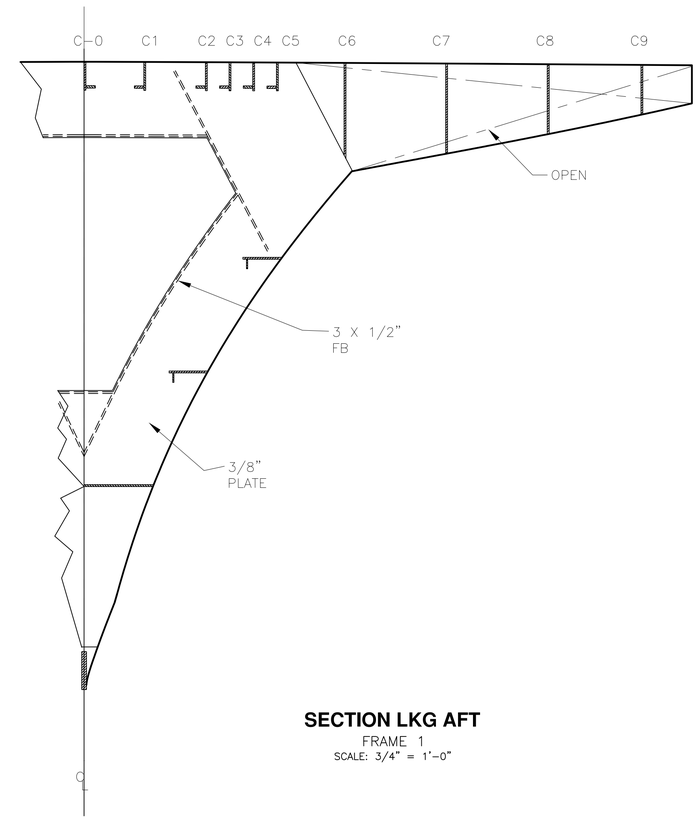

SECTION LKG AFT

FRAME 1

SCALE: 3/4" = 1'-0"

Seaworthy Systems, Inc.
MARINE ENGINEERS
NAVAL ARCHITECTS
P.O. BOX 965
ESSEX, CT 06426
USA
TEL: 860-767-9061
FAX: 860-767-1263

FOR

MAINE STATE FERRY SERVICE
P.O. BOX 645, 517A MAINE ST
ROCKLAND, ME 04841-0645

TITLE 154' RO/RO/PASS FERRY

STRUCTURE BELOW MAIN DECK

SCALE		SIZE	DRG No.	REV.	SHEET
AS STATED	DIMS IN INCHES UNLESS OTHERWISE STATED	D	575-02-111	A	16 OF 18

SSI FILE No. s:\active\projnumb\575-02\Drafting\Active\575-02-111.dwg

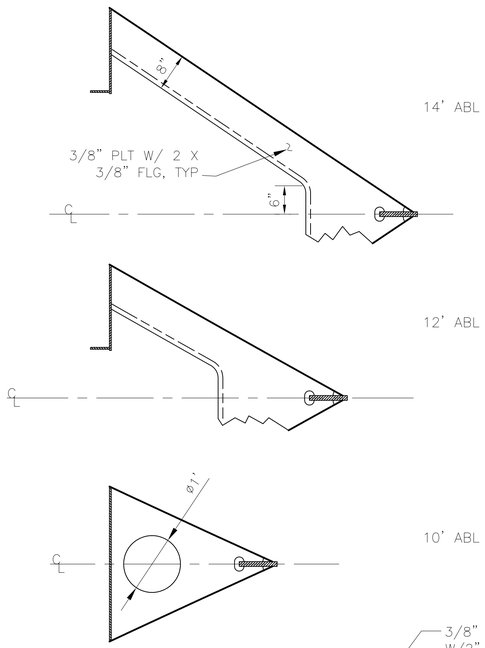

PLAN VIEW
BREASTHOOKS
SCALE: 3/4" = 1'-0"

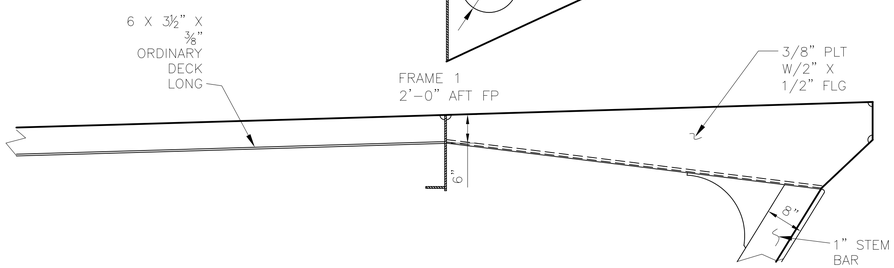

ELEVATION VIEW
CENTERLINE FRAMING
SCALE: 3/4" = 1'-0"

NOTE: OTHER DECK "CANT" FRAMES
SIMILAR TO C-0 AND C-4

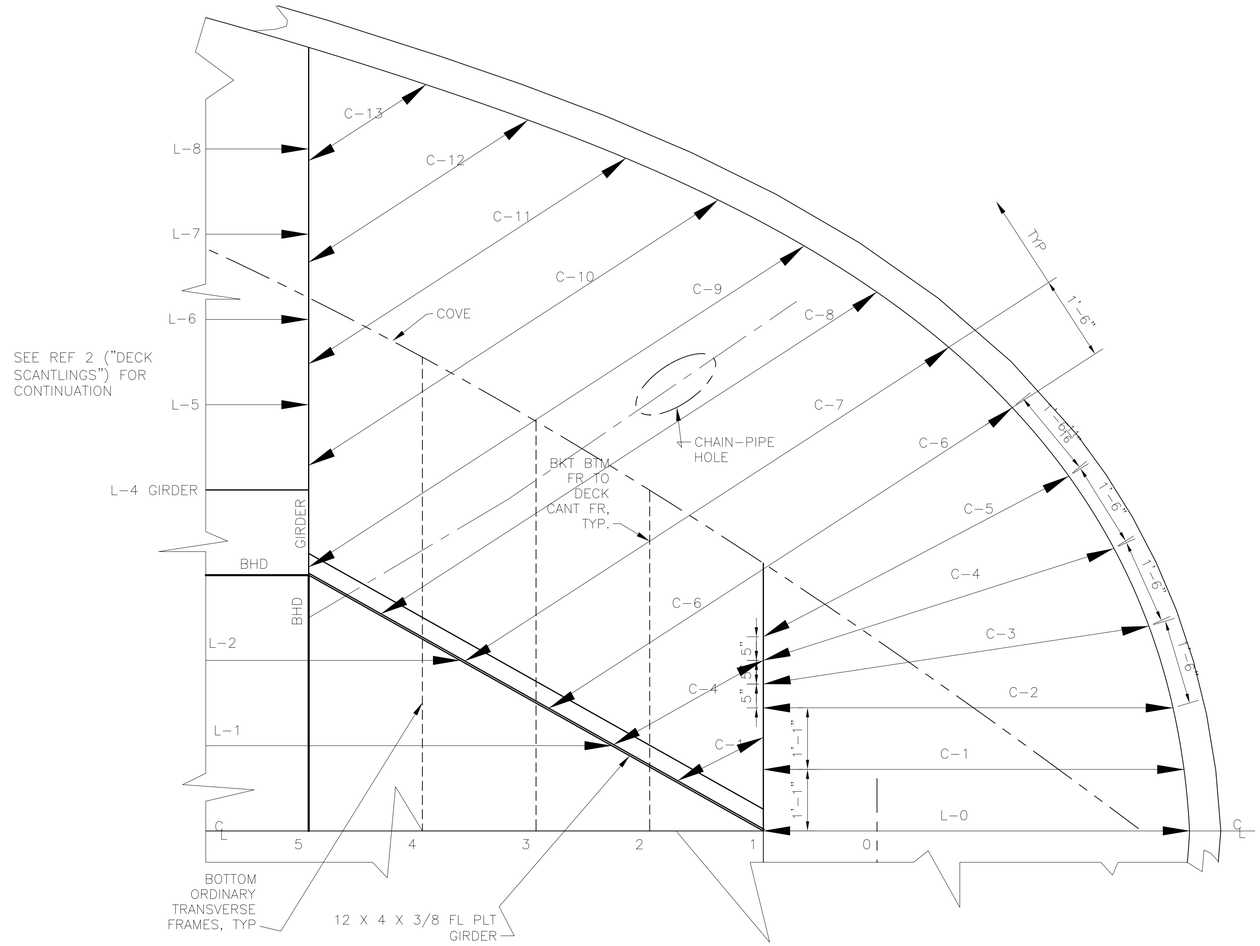

PLAN VIEW
BOW DECK DETS. DK PLATE NOT SHOWED.
SCALE: 3/4" = 1'-0"
STB SIM/OPP

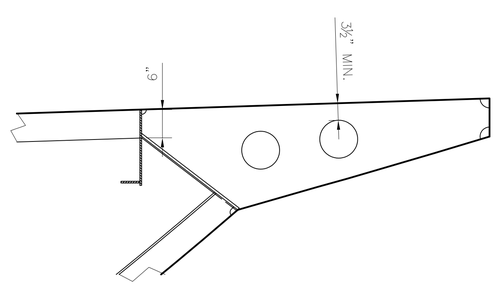

ELEVATION VIEW - TRANSVERSE PROJECTION
CANT FRAME "C-4"
SCALE: 3/4" = 1'-0"

Seaworthy Systems, Inc.
MARINE ENGINEERS
NAVAL ARCHITECTS
P.O. BOX 965
ESSEX, CT 06426
USA
TEL: 860-767-9061
FAX: 860-767-1263

FOR
MAINE STATE FERRY SERVICE
P.O. BOX 645, 517A MAINE ST
ROCKLAND, ME 04841-0645

TITLE 154' RO/RO/PASS FERRY

STRUCTURE BELOW MAIN DECK

SCALE: AS STATED

DIMS IN INCHES UNLESS OTHERWISE STATED

SIZE	DRG No.	REV.	SHEET
D	575-02-111	A	17 OF 18

SSI FILE No. s:\active\projnumb\575-02\Drafting\Active\575-02-111.dwg

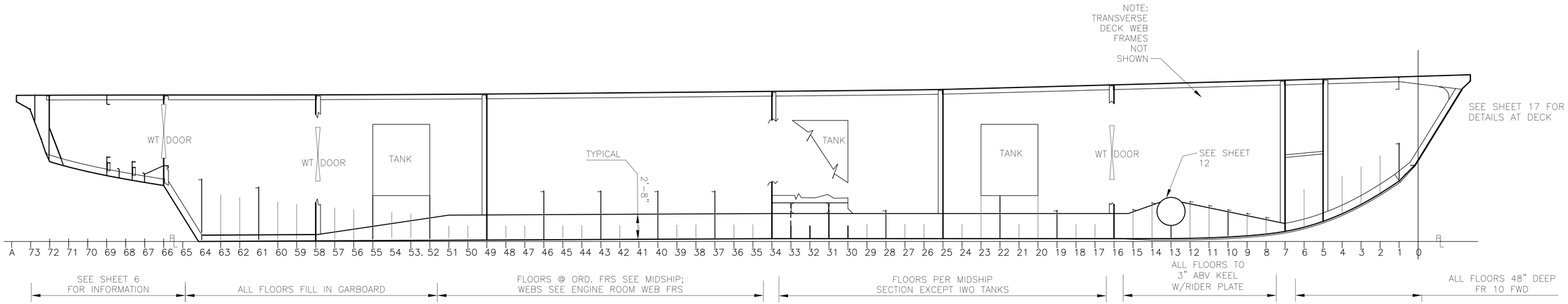

LONG. SECTION 138-C

CENTERLINE GIRDER

SCALE: 3/16" = 1'-0"

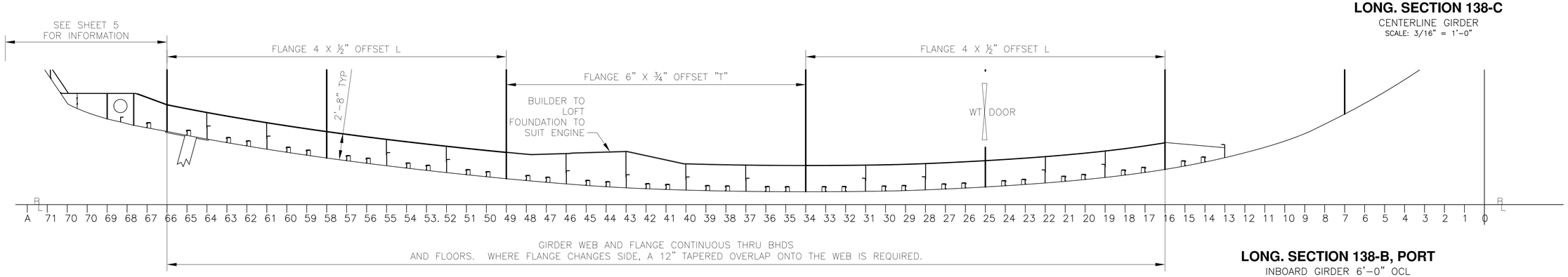

LONG. SECTION 138-B, PORT

INBOARD GIRDER 6'-0" OCL

SCALE: 3/16" = 1'-0"

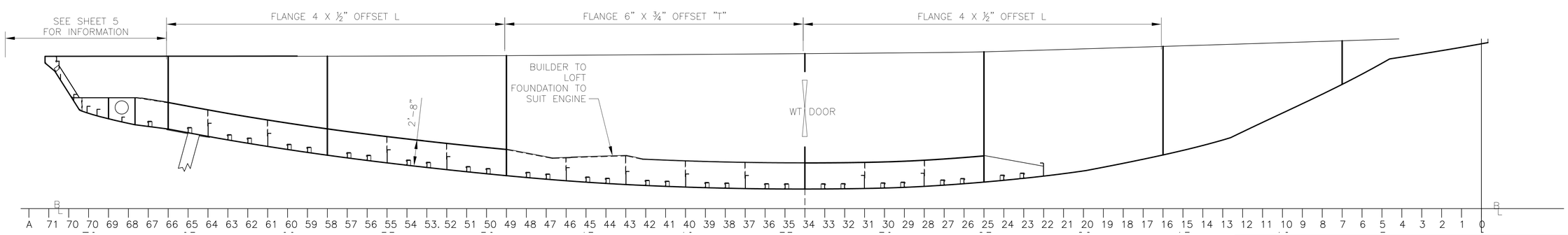

LONG. SECTION, PORT

OUTBOARD GIRDER 9'-0" OCL

SCALE: 3/16" = 1'-0"

Seaworthy Systems, Inc.
MARINE ENGINEERS NAVAL ARCHITECTS
P.O. BOX 965
ESSEX, CT 06426
USA
TEL: 860-767-9061
FAX: 860-767-1263

FOR
MAINE STATE FERRY SERVICE
P.O. BOX 645, 517A MAINE ST
ROCKLAND, ME 04841-0645

TITLE 154' RO/RO/PASS FERRY

STRUCTURE BELOW MAIN DECK

SCALE		SIZE	DRG No.	REV	SHEET
AS STATED	DIMS IN INCHES UNLESS OTHERWISE STATED	D	575-02-111	A	18 OF 18

SSI FILE No. s:\active\projnumb\575-02\Drafting\Active\575-02-111.dwg

REVISIONS					
REV.	DATE	DESCRIPTION	SHEET	ZONE	AUTH°
A	01/16/2006	REVS TO REFLECT GA MODIFICATIONS BLW 02 DK	3	19,21C	JAH
		REMOVED RECT. TUBING AT AFT END OF 02 DK	3	22C	JAH
B	–	–			
C	–	–			
D	–	–			

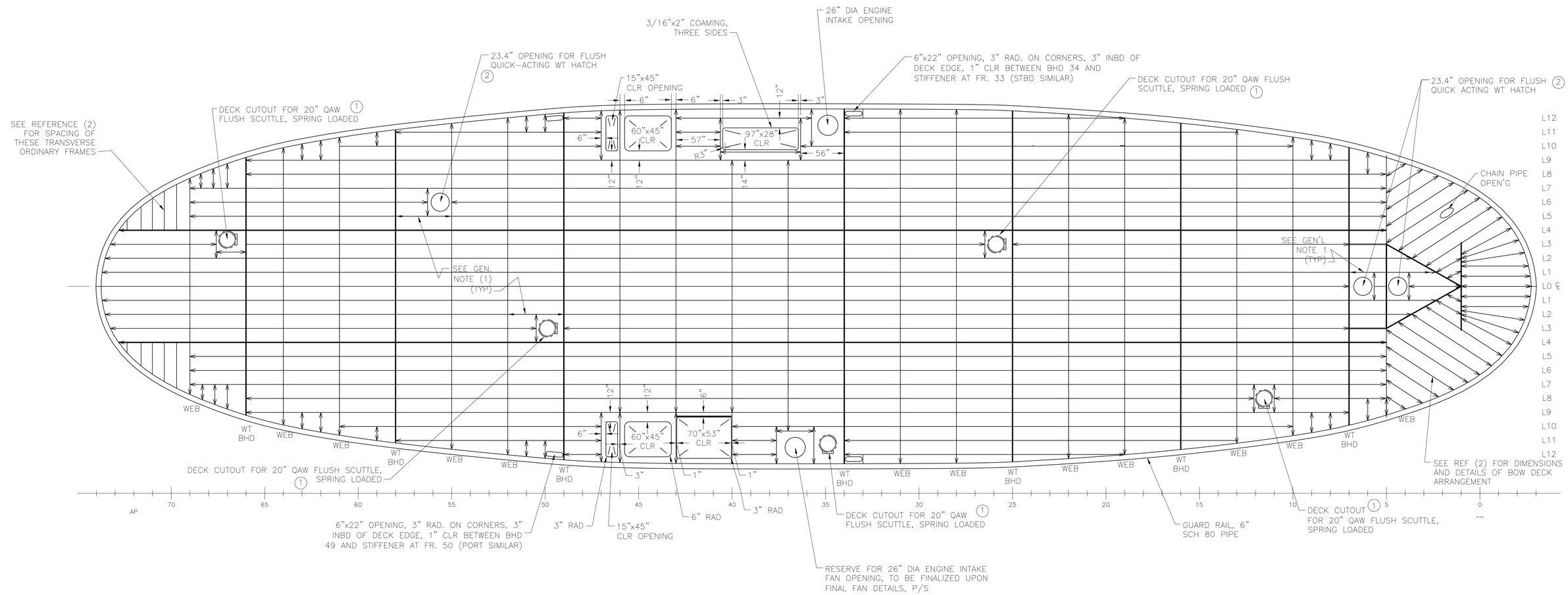

GENERAL NOTES

1. FLANGES OF DECK LONGS IWO HATCHES OR OPENINGS SHALL HAVE 3" X ⅝" RIDER PLATES ATTACHED TO FLANGE SPANNING BETWEEN NEAREST TRANSVERSE WEB FRAMES.

2. FOR SIZES AND GEOMETRY OF MEMBERS, END ATTACHMENTS AND ARRANGEMENTS, SEE REFERENCE (2).

3. SEE REFERENCE (1) FOR MATERIAL AND WELDING SPECIFICATIONS.

MAIN DECK SCANTLINGS

3/8" PL MAIN DECK (NOT SHOWN FOR CLARITY)
L1–L3, L5–L12 LONGITUDINALS ARE CONTINUOUS, 18" CTC AND 6X3.5X3/8 L P/S
L4 (CONTINUOUS) 15"x9"x ¾" BUILT UP TEE
TRANSVERSE WEBS 12"x4"x⅜" FLG PL
SCALE: 3/16" = 1'–0"

STATE OF MAINE JOHN A. HUNTER NO. 10737 REGISTERED PROFESSIONAL ENGINEER 10-3-05

ITEM	DESCRIPTION	QTY
4		–
3		–
2	LIFT–OUT QUICK–ACTING WT FLUSH HATCH	–
1	20" CLEAR OPENING QUICK–ACTING HINGED FLUSH SCUTTLE, CEN–TEX MARINE	–

HATCH SCHEDULE

3/16" = 1'–0"

NO.	REFERENCES
4	575–02–001, LINES PLAN
3	574–02–151, SUPERSTRUCTURE SCANTLINGS
2	575–02–111, SCANTLINGS BELOW MAIN DECK
1	SPECIFICATION

APPROVALS:	SUBMIT DATE	APPROVED BY	APPROVED DATE	RE–SUBMIT DATE	APPROVED BY	APPROVED DATE
OWNER	–	–	–	–	–	–
USCG	–	–	–	–	–	–
ABS	–	–	–	–	–	–
USPHS	–	–	–	–	–	–

Seaworthy Systems, Inc.
MARINE ENGINEERS NAVAL ARCHITECTS
P.O. BOX 965
ESSEX, CT 06426
USA
TEL: 860–767–9061
FAX: 860–767–1263

FOR
MAINE STATE FERRY SERVICE
P.O. BOX 645, 517A MAIN STREET
ROCKLAND, ME 04841–0645

TITLE 154' RO/RO/PASS FERRY
DECK SCANTLINGS

CHECKED BY	AUTH° BY	SCALE
JAH 09–30–05	JAH 09–30–05	3/16" = 1'–0"
DRAWN BY	ORIG° DATE	
JEK	08–07–05	DIMS IN INCHES UNLESS OTHERWISE STATED

SIZE	DRG No.	REV.	SHEET
D	575–02–131	A	1 OF 3

SSI FILE No. s:\active\projnumb\575–02\575–02–131.dwg

DO NOT SCALE, IF IN DOUBT ASK

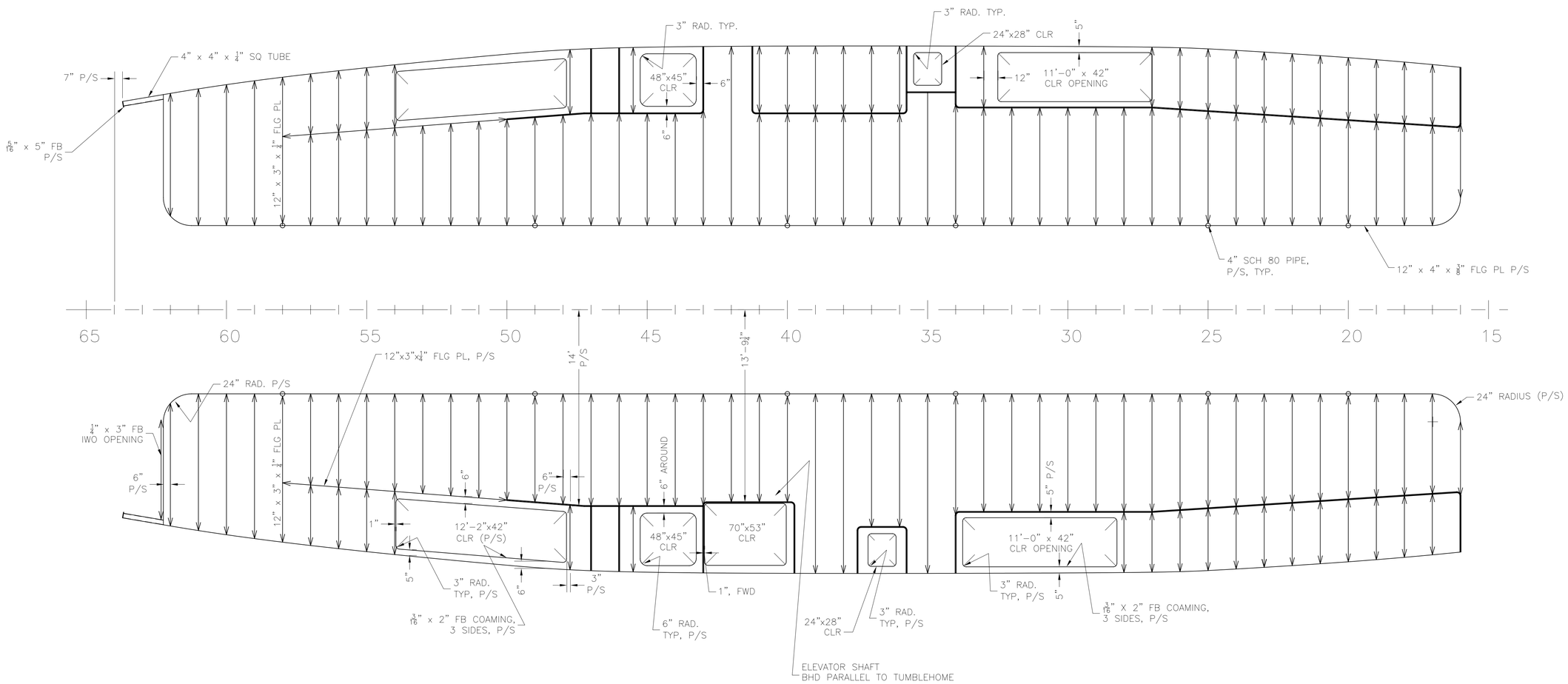

PLAN BELOW 01 DECK

1/4" DECK PL (NOT SHOWN FOR CLARITY)
BULKHEADS SHOWN ARE BELOW 01 DECK
ALL TRANSVERSES ARE 4"x3"x1/4", 24" CTC
ALL OPENINGS TO HAVE A MINIMUM 3" RADIUS
SCALE 1/4" = 1'-0"

1/4" = 1'-0"

Seaworthy Systems, Inc.
MARINE ENGINEERS NAVAL ARCHITECTS
P.O. BOX 965
ESSEX, CT 06426
USA
TEL: 860-767-9061
FAX: 860-767-1263

FOR
MAINE STATE FERRY SERVICE
P.O. BOX 645, 517A MAINE ST
ROCKLAND, ME 04841-0645

TITLE 154' RO/RO/PASS FERRY

DECK SCANTLINGS

SCALE: AS STATED

DIMS IN INCHES UNLESS OTHERWISE STATED

SIZE	DRG No.	REV	SHEET
D	575-02-131	A	2 OF 3

SSI FILE No. s:\active\projnumb\575-02\Drafting\Active\575-02-131.dwg

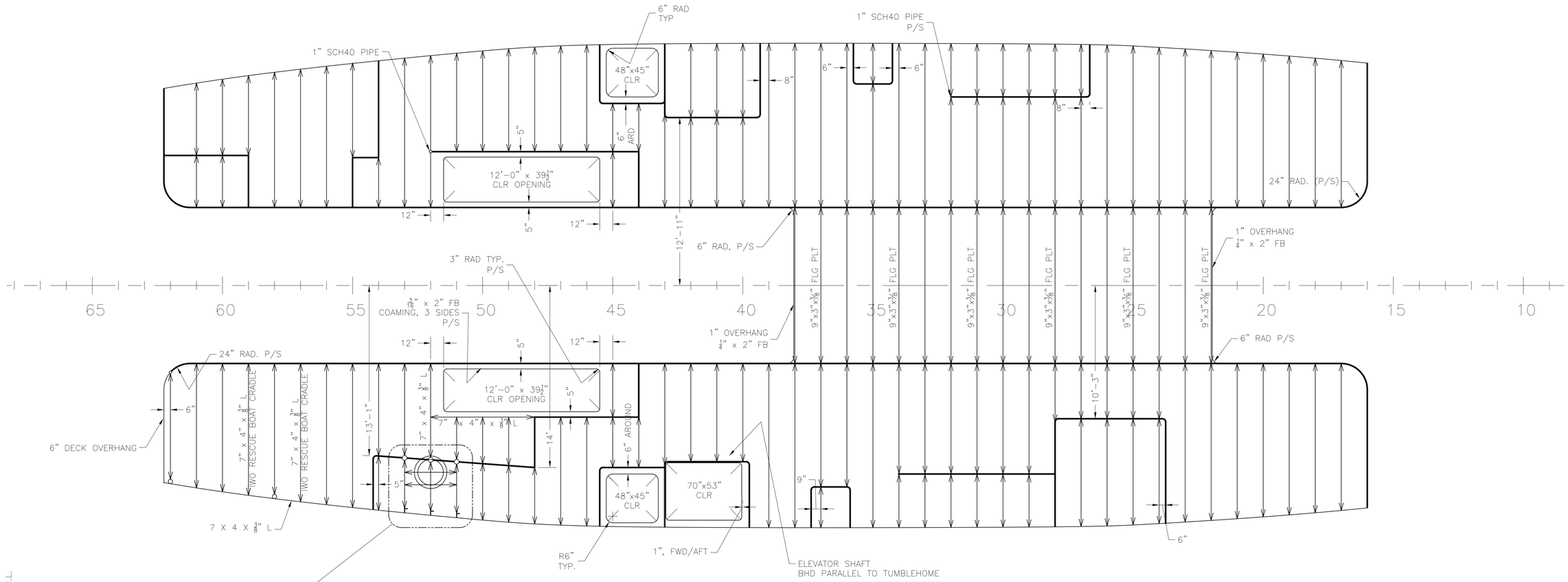

PLAN BELOW 02 DECK

1/4" DECK PL (NOT SHOWN FOR CLARITY)
ALL ORDINARY FRAMES 4"x3"x¼" ANGLE, 24" CTC
SCALE ¼" = 1'-0"

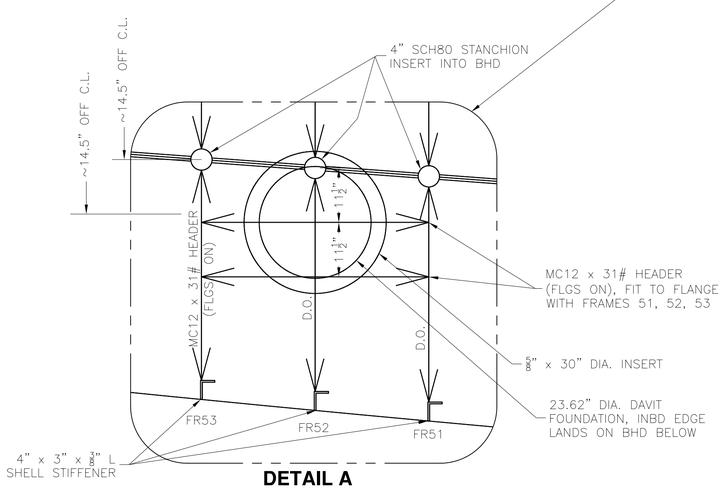

DETAIL A

RESCUE BOAT DAVIT DECK REINFORCEMENT
SCALE: 3/4 IN = 1 FT

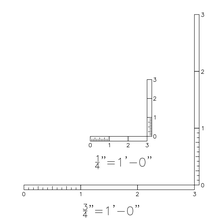

Seaworthy Systems, Inc.
MARINE ENGINEERS NAVAL ARCHITECTS
P.O. BOX 965
ESSEX, CT 06426
USA
TEL: 860-767-9061
FAX: 860-767-1263

FOR
MAINE STATE FERRY SERVICE
P.O. BOX 645, 517A MAINE ST
ROCKLAND, ME 04841-0645

TITLE 154' RO/RO/PASS FERRY

DECK SCANTLINGS

SCALE		SIZE	DRG No.	REV	SHEET
AS STATED	DIMS IN INCHES UNLESS OTHERWISE STATED	D	575-02-131	A	3 OF 3

SSI FILE No. s:\active\projnumb\575-02\Drafting\Active\575-02-131.dwg

REVISIONS					
REV.	DATE	DESCRIPTION	SHEET	ZONE	AUTH^{D}
A	02/06/2006	REVS TO REFLECT WINDOW, ANCHOR MODS	ALL	VAR	JAH
B	–	–			
C	–	–			
D	–	–			

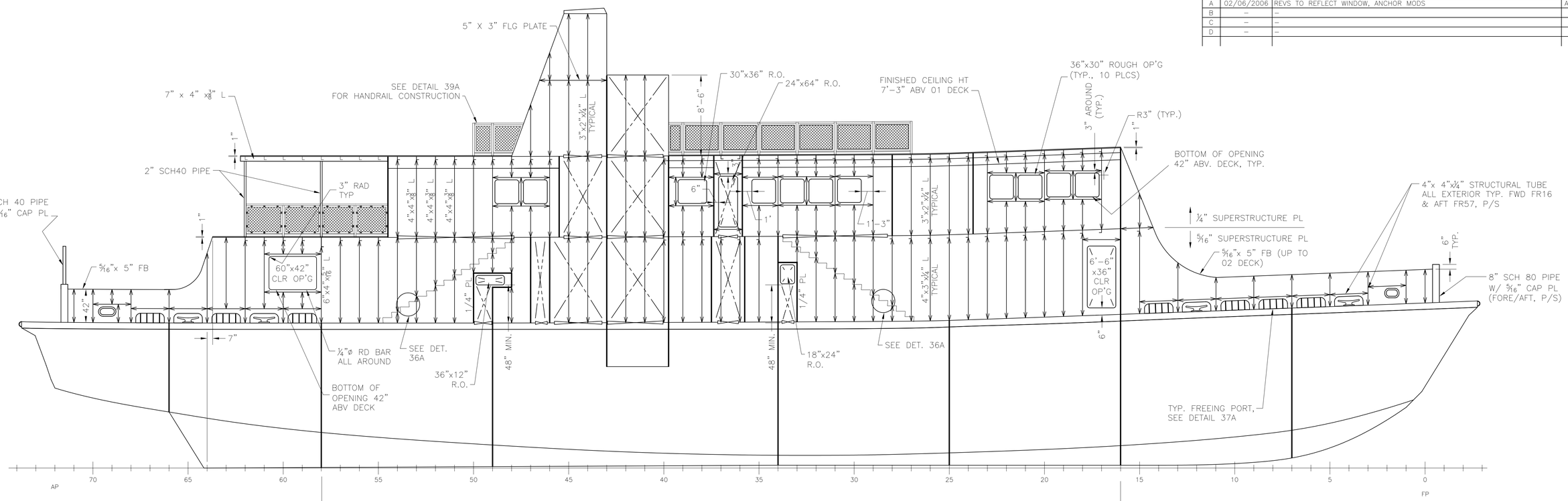

STARBOARD PROFILE, LKG INBD

SUPERSTRUCTURE PL NOT SHOWN FOR CLARITY (NOT EXPANDED)
ALL INTERIOR BHDS ARE 1/4" PL
ALL OPENINGS TO HAVE A MINIMUM 3" RADIUS
SCALE: 3/16" = 1'-0"

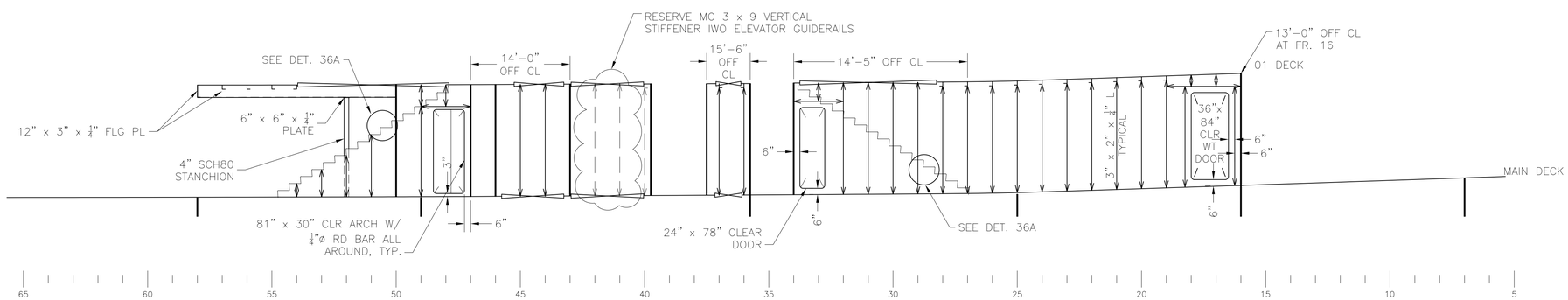

STBD ELEVATION OF 1/4" LONGITUDINAL BULKHEAD

LOOKING INBD, VIEW NOT EXPANDED, PLATE NOT SHOWN FOR CLARITY
ALL TRANSVERSE BHD'S 1/4" PL
ALL VERICAL STIFFENERS TO BE SNIPED AT 45°
ALL OPENINGS TO HAVE MIN. 3" RADIUS
SCALE: 3/16" = 1'-0"

3/16" = 1'-0"

ITEM	DESCRIPTION	QTY
4		–
3		–
2	–	–
1	–	–

BILL OF MATERIALS

NO.	REFERENCES
4	575-02-001, LINES PLAN
3	574-02-131, DECK SCANTLINGS
2	575-02-111, SCANTLINGS BELOW MAIN DECK
1	SPECIFICATION

APPROVALS:	SUBMIT DATE	APPROVED BY	APPROVED DATE	RE-SUBMIT DATE	APPROVED BY	APPROVED DATE
OWNER	–	–	–	–	–	–
USCG	–	–	–	–	–	–
ABS	–	–	–	–	–	–
USPHS	–	–	–	–	–	–

STATE OF MAINE JOHN A. HUNTER NO. 10737 REGISTERED PROFESSIONAL ENGINEER 10-3-05

Seaworthy Systems, Inc.
MARINE ENGINEERS NAVAL ARCHITECTS
P.O. BOX 965
ESSEX, CT 06426
USA
TEL: 860-767-9061
FAX: 860-767-1263

FOR
MAINE STATE FERRY SERVICE
P.O. BOX 645, 517A MAIN STREET
ROCKLAND, ME 04841-0645

TITLE 154' RO/RO/PASS FERRY
SUPERSTRUCTURE SCANTLINGS

CHECKED BY	AUTH^{D} BY	SCALE
JAH 09-30-05	JAH 09-30-05	3/16" = 1'-0"
DRAWN BY	ORIG^{L} DATE	
JEK	08-07-05	DIMS IN INCHES UNLESS OTHERWISE STATED

SIZE	DRG No.	REV.	SHEET
D	575-02-151	A	1 OF 4

SSI FILE No. s:\active\projnumb\575-02\575-02-151_131.dwg

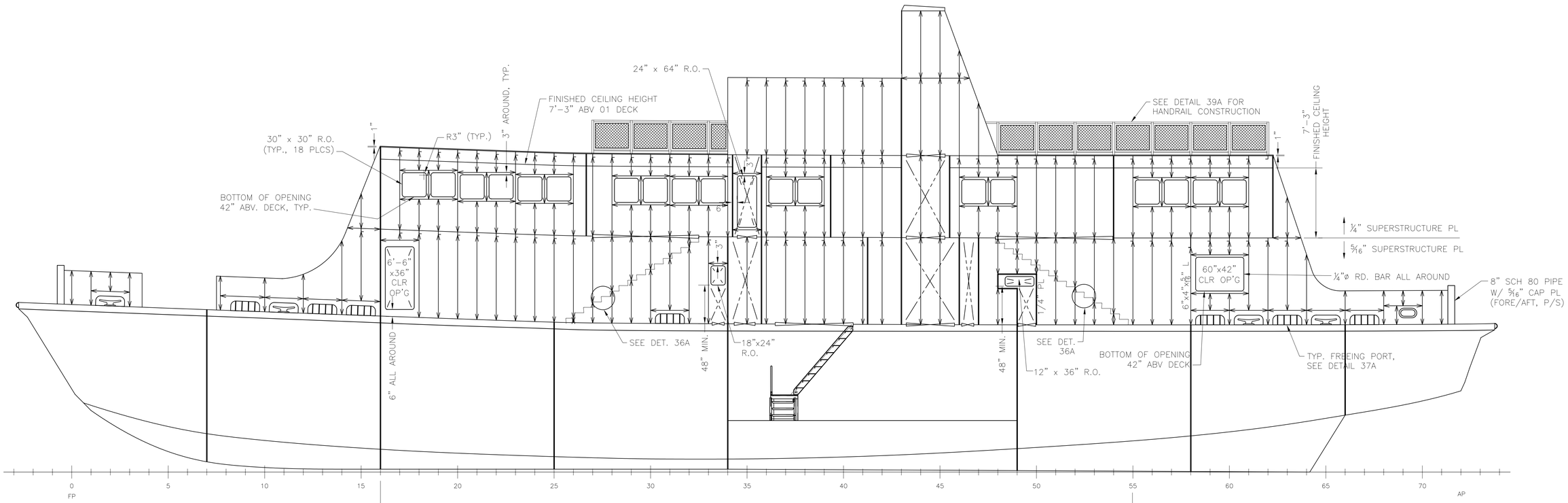

PORT PROFILE

SUPERSTRUCTURE PL NOT SHOWN FOR CLARITY (NOT EXPANDED)
ALL INTERIOR BHDS ARE ¼" PL
ALL OPENINGS TO HAVE A MINIMUM 3" RADIUS
SCALE: 3/16" = 1'-0"

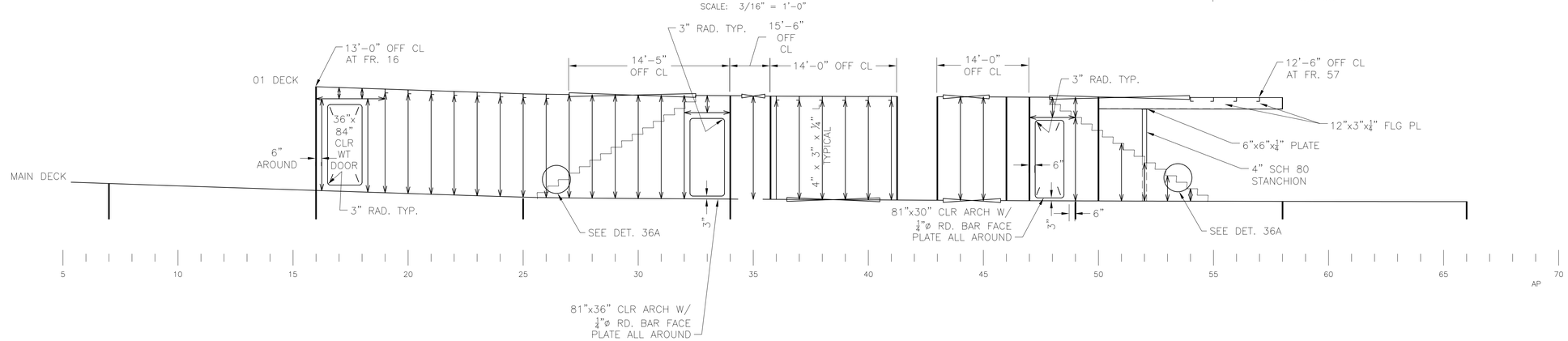

PORT ELEVATION OF 1/4" LONGITUDINAL BULKHEAD

LOOKING INBD, VIEW NOT EXPANDED, PLATE NOT SHOWN FOR CLARITY
ALL TRANSVERSE BHD'S ¼" PL
ALL VERICAL STIFFENERS TO BE SNIPED AT 45°
ALL OPENINGS TO HAVE MIN. 3" RADIUS
SCALE: 3/16" = 1'-0"

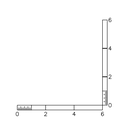

Seaworthy Systems, Inc.
MARINE ENGINEERS
NAVAL ARCHITECTS
P.O. BOX 965
ESSEX, CT 06426
USA
TEL: 860-767-9061
FAX: 860-767-1263

FOR
MAINE STATE FERRY SERVICE
P.O. BOX 645, 517A MAINE ST
ROCKLAND, ME 04841-0645

TITLE 154' RO/RO/PASS FERRY

SUPERSTRUCTURE SCANTLINGS

SCALE		SIZE	DRG No.	REV.	SHEET
AS STATED	DIMS IN INCHES UNLESS OTHERWISE STATED	D	575-02-151	–	2 OF 4

SSI FILE No. s:\active\projnumb\575-02\Drafting\Active\575-02-151.dwg

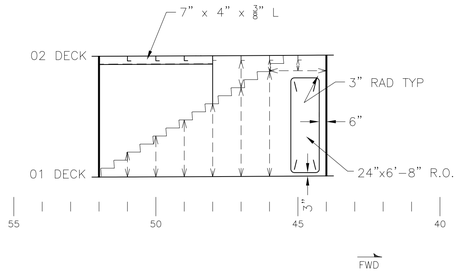

STBD ELEVATION OF AFT INTERIOR BULKHEAD

10'-1 1/2" OFF CL, LOOKING INBD, VIEW NOT EXPANDED

SCALE: 3/16" = 1'-0"

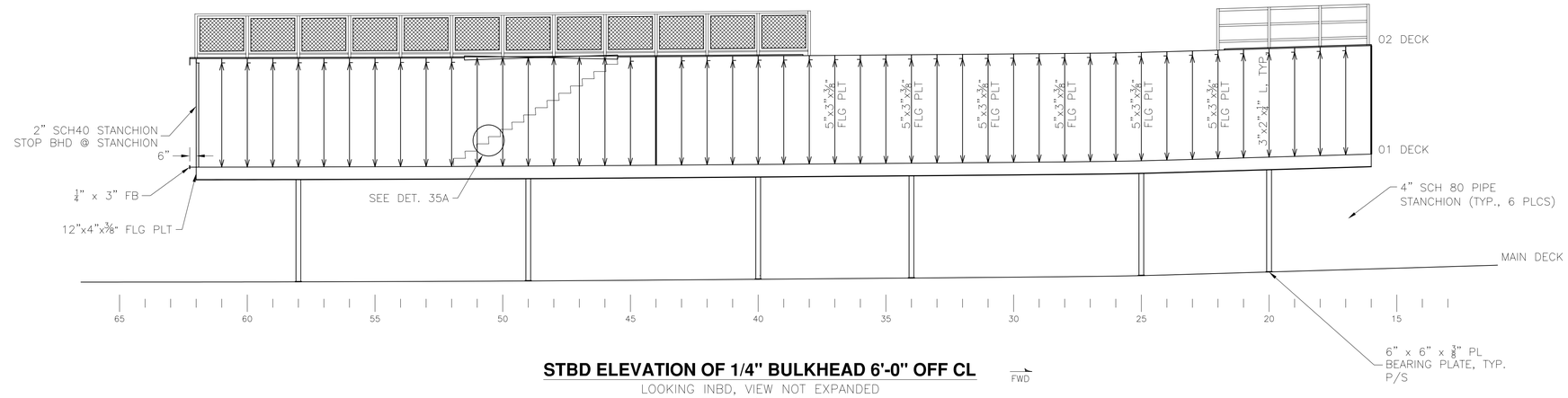

STBD ELEVATION OF 1/4" BULKHEAD 6'-0" OFF CL

LOOKING INBD, VIEW NOT EXPANDED

SCALE: 3/16" = 1'-0"

FWD

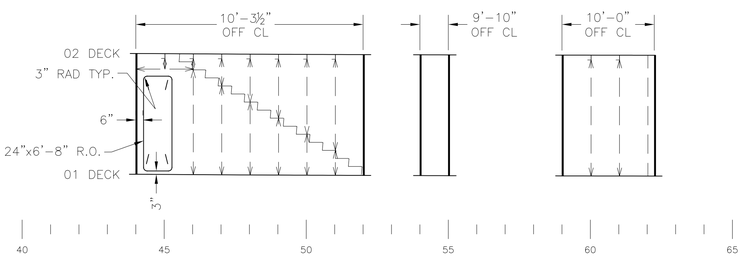

PORT ELEVATION OF AFT INTERIOR BULKHEADS

LOOKING INBD, VIEW NOT EXPANDED

SCALE: 3/16" = 1'-0"

FWD

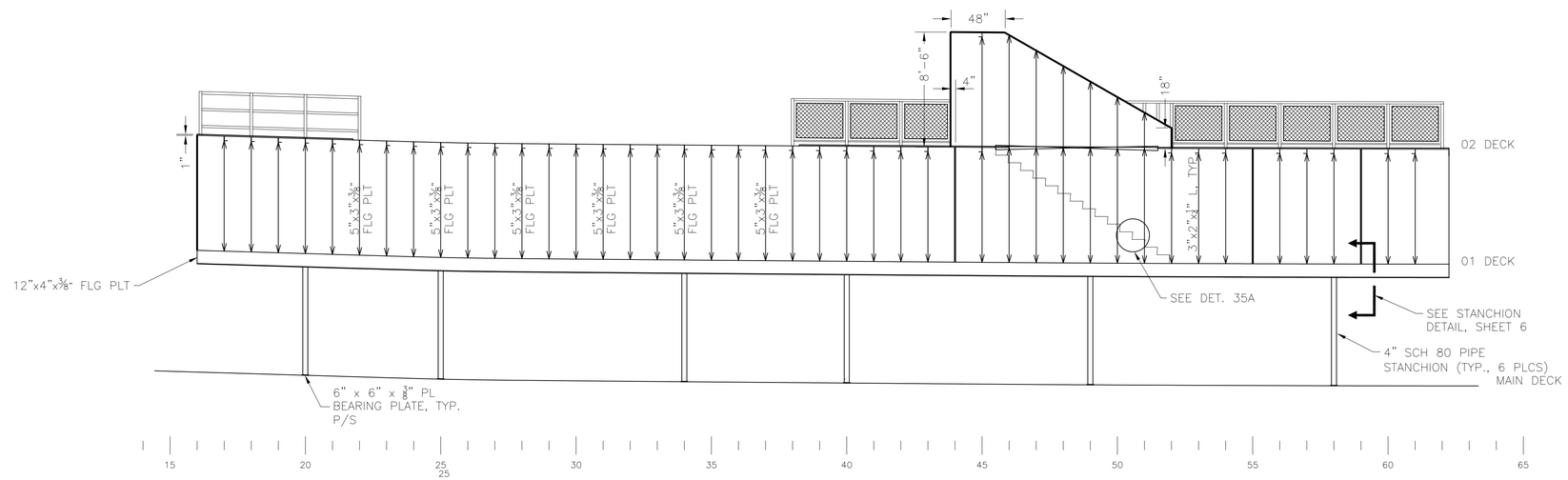

PORT ELEVATION OF 1/4" PL. BULKHEAD 6'-0" OFF CL

LOOKING INBD, VIEW NOT EXPANDED

SCALE: 3/16" = 1'-0"

FWD

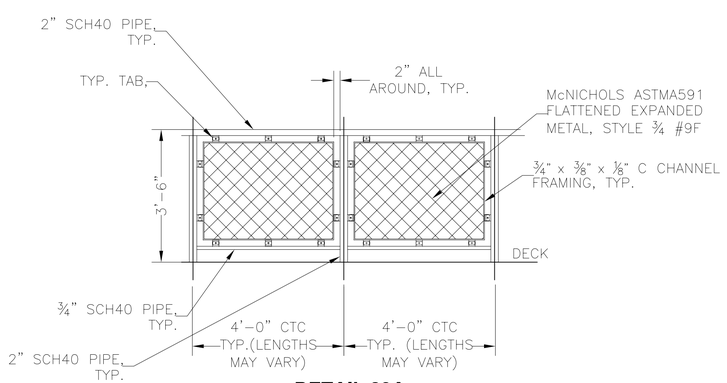

DETAIL 39A

TYPICAL HANDRAIL DETAIL

SCALE: 1/2" = 1'-0"

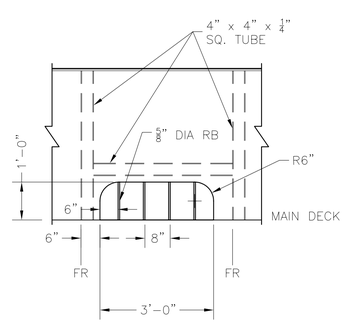

DETAIL 37A

TYPICAL FREEING PORT

SCALE: 1/2" = 1'-0"

NOTE: TREAD HEIGHTS ARE APPROXIMATE AND ARE TO BE CALCULATED TO ENSURE UNIFORM TREAD HEIGHT AFTER INSTALLATION OF DECK COVERINGS.

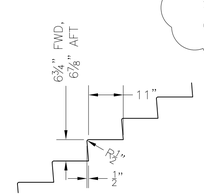

DETAIL 36A

MAIN DECK 1/4" PL. STAIRS, P/S SIMILAR

SCALE: 1/2" = 1'-0"

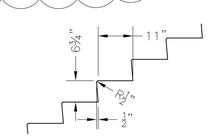

DETAIL 35A

01 DECK AFT 1/4" PL. STAIRS, P/S SIMILAR

SCALE: 1/2" = 1'-0"

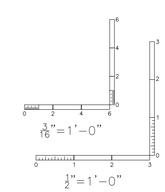

Seaworthy Systems, Inc.
MARINE ENGINEERS NAVAL ARCHITECTS
P.O. BOX 965
ESSEX, CT 06426
USA
TEL: 860-767-9061
FAX: 860-767-1263

FOR

MAINE STATE FERRY SERVICE

P.O. BOX 645, 517A MAINE ST
ROCKLAND, ME 04841-0645

TITLE 154' RO/RO/PASS FERRY

SUPERSTRUCTURE SCANTLINGS

SCALE		SIZE	DRG No.	REV.	SHEET
AS STATED	DIMS IN INCHES UNLESS OTHERWISE STATED	D	575-02-151	—	3 OF 4

SSI FILE No. s:\active\projnumb\575-02\Drafting\Active\575-02-151.dwg

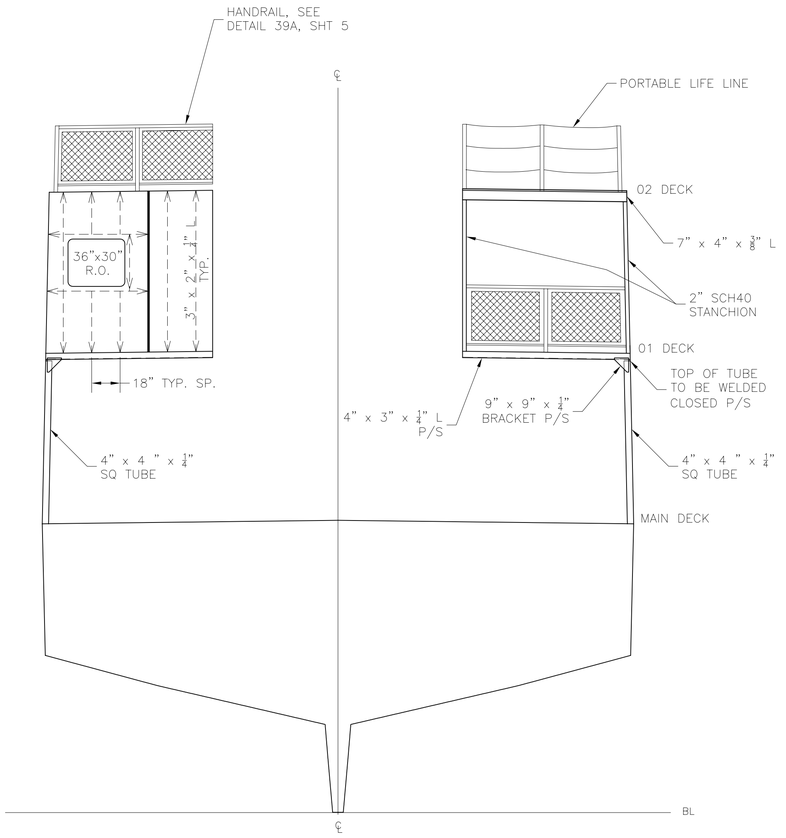

SECTION AT FRAME 62

LOOKING FWD, ALL BHD'S 1/4" PLATE

SCALE: 1/4" = 1'-0"

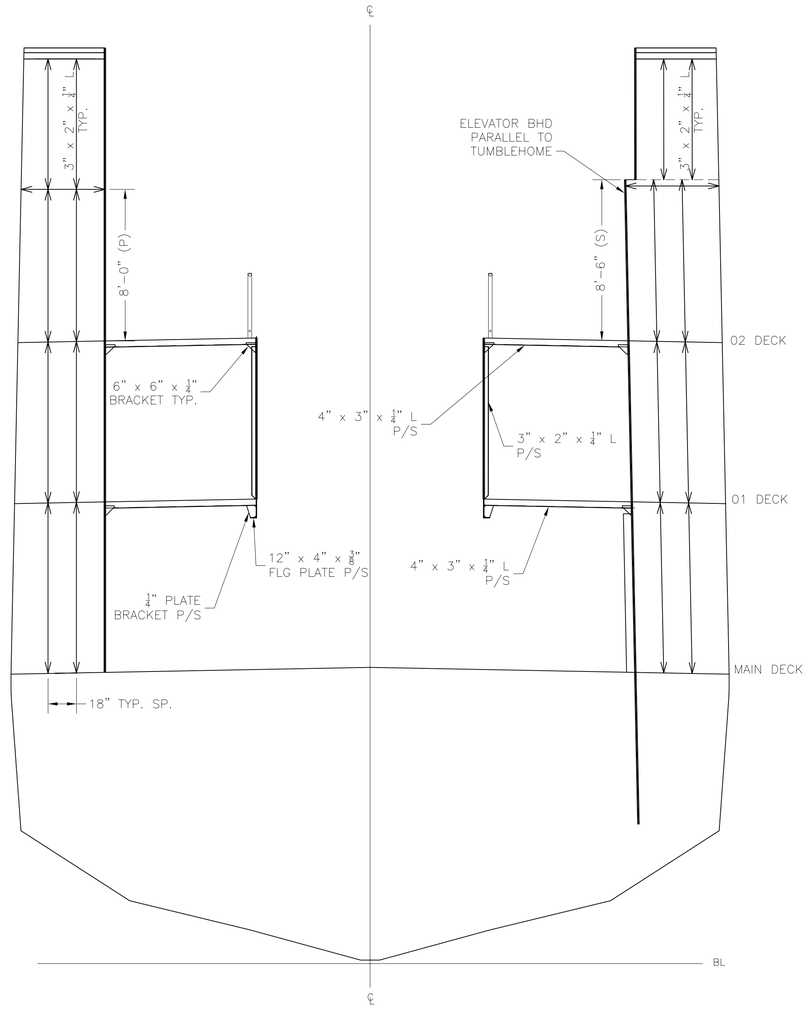

SECTION AT FRAME 43

LOOKING FWD, ALL BHD'S 1/4" PLATE

SCALE: 1/4" = 1'-0"

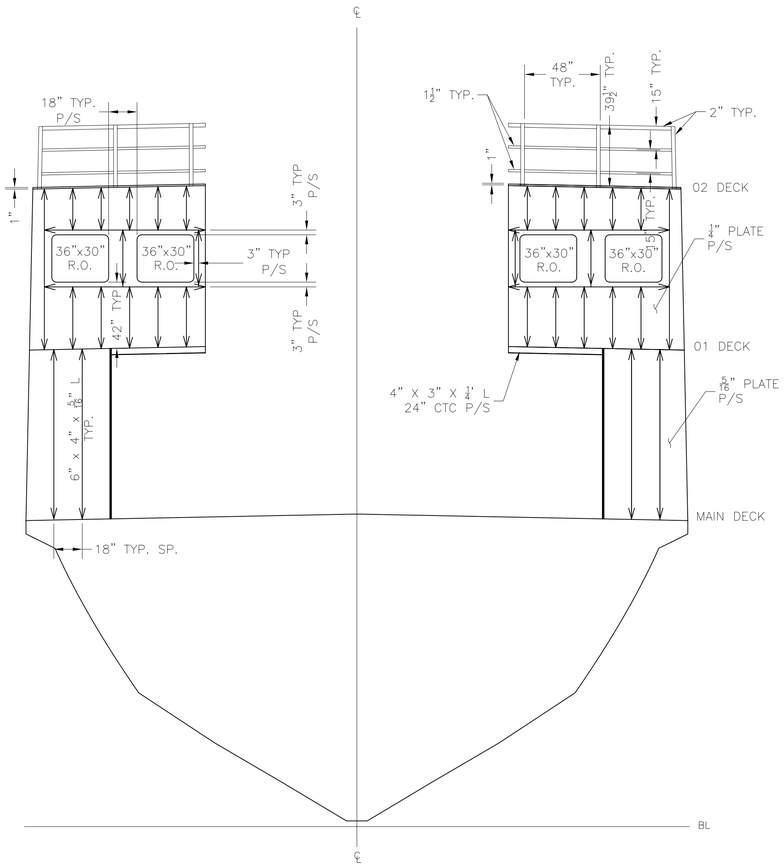

SECTION AT FRAME 16

LOOKING FWD

SCALE: 1/4" = 1'-0"

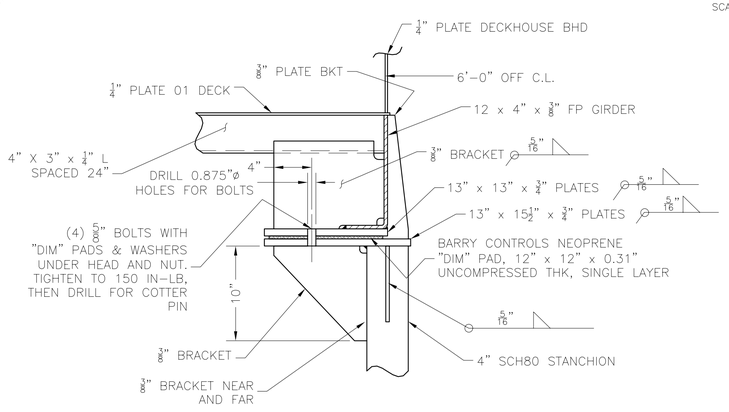

STANCHION DETAIL

SCALE: 1 1/2" = 1'-0"

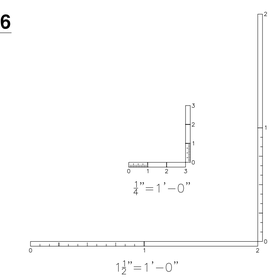

Seaworthy Systems, Inc.
MARINE ENGINEERS NAVAL ARCHITECTS
P.O. BOX 965
ESSEX, CT 06426
USA
TEL: 860-767-9061
FAX: 860-767-1263

FOR
MAINE STATE FERRY SERVICE
P.O. BOX 645, 517A MAINE ST
ROCKLAND, ME 04841-0645

TITLE 154' RO/RO/PASS FERRY

SUPERSTRUCTURE SCANTLINGS

SCALE: AS STATED

DIMS IN INCHES UNLESS OTHERWISE STATED

SIZE	DRG No.	REV.	SHEET
D	575-02-151	–	4 OF 4

SSI FILE No. s:\active\projnumb\575-02\Drafting\Active\575-02-151.dwg

DO NOT SCALE, IF IN DOUBT ASK

REVISIONS					
REV.	DATE	DESCRIPTION	SHEET	ZONE	AUTH^{D}
A	01/13/06	REVISED WINDOW CALLOUTS	2	12-B/D	JAH
B	–	–			
C	–	–			
D	–	–			

GENERAL NOTES:

1. ALL MATERIALS, WORKMANSHIP AND INSTALLATION TO MEET THE REQUIREMENTS OF CFR 46 SUBCHAPTER H AND BE TO THE SATISFACTION OF THE USCG OCMI.

2. ALL DIMENSIONS ARE APPROXIMATE AND SHOULD BE VERIFIED IN THE FIELD PRIOR TO INSTALLATION.

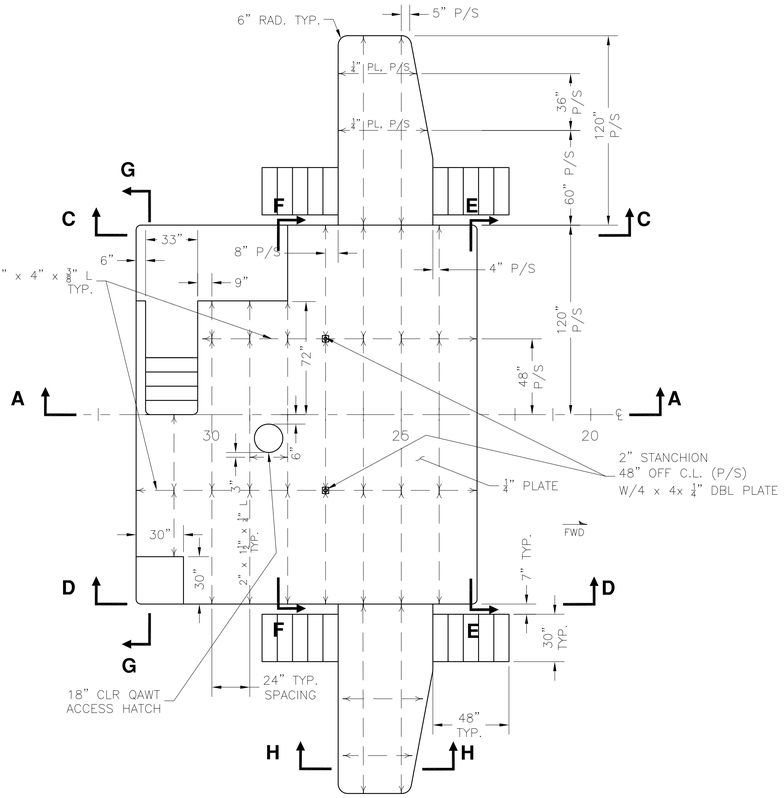

1/4" PL. PILOT HOUSE DECK

PLAN VIEW

SCALE: 1/4 IN = 1 FT

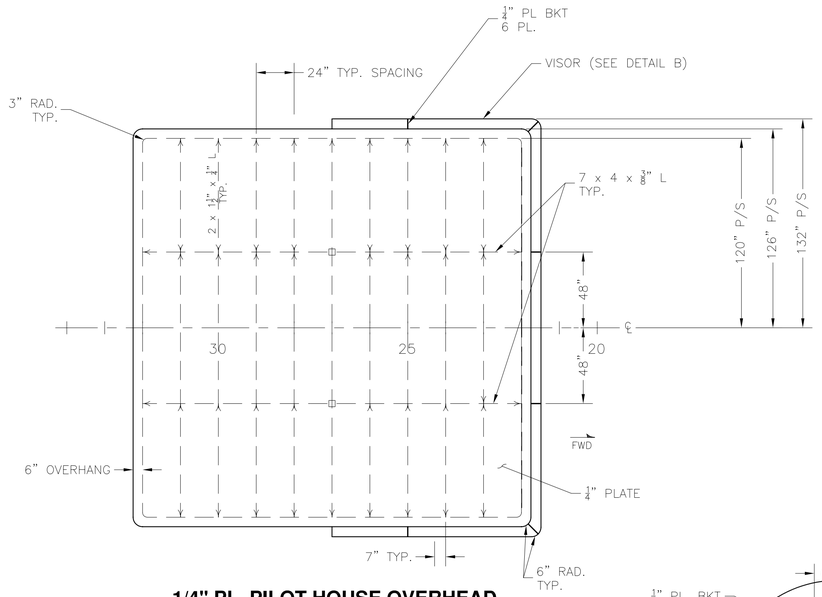

1/4" PL. PILOT HOUSE OVERHEAD

PLAN VIEW

SCALE: 1/4 IN = 1 FT

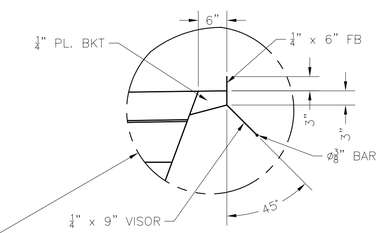

DETAIL B

PILOT HOUSE OVERHANG & VISOR

SCALE: 3/4 IN = 1 FT

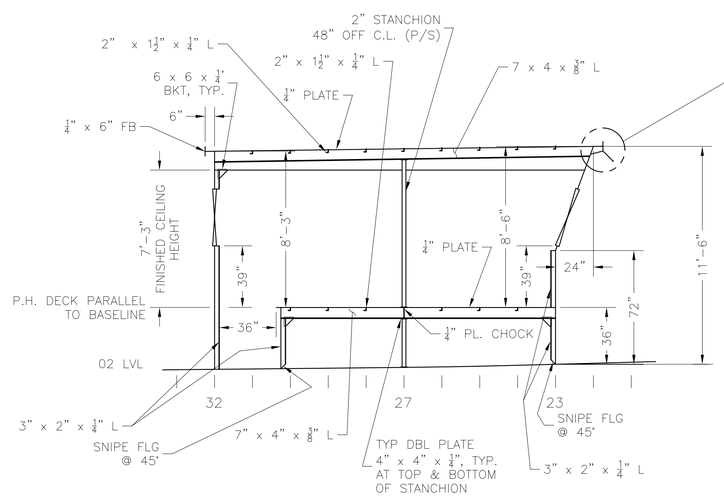

SECTION A-A

1/4" PL. PILOT HOUSE ON C.L., LKG TO PORT

SCALE: 1/4 IN = 1 FT

STATE OF MAINE JOHN A. HUNTER NO. 10737 REGISTERED PROFESSIONAL ENGINEER 10-3-05

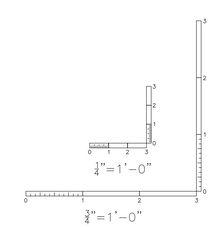

NO.	REFERENCES					
3	–					
2	–					
1	–					
APPROVALS:	SUBMIT DATE	APPROVED BY	APPROVED DATE	RE-SUBMIT DATE	APPROVED BY	APPROVED DATE
OWNER	–	–	–	–	–	–
USCG	–	–	–	–	–	–
ABS	–	–	–	–	–	–
USPHS	–	–	–	–	–	–

Seaworthy Systems, Inc.
MARINE ENGINEERS NAVAL ARCHITECTS
P.O. BOX 965
ESSEX, CT 06426
USA
TEL: 860-767-9061
FAX: 860-767-1263

CHECKED BY	AUTH^{D} BY	SCALE
JAH 09-30-05	JAH 09-30-05	AS STATED
DRAWN BY	ORIG^{L} DATE	
LAG	08-12-05	DIMS IN INCHES UNLESS OTHERWISE STATED

FOR

MAINE STATE FERRY SERVICE

P.O. BOX 645, 517A MAIN STREET
ROCKLAND, ME 04841-0645

TITLE 154' RO/RO/PASS FERRY

PILOT HOUSE STRUCTURE

SIZE	DRG No.	REV.	SHEET
D	575-02-153	A	1 OF 2

SSI FILE No. s:\active\projnumb\575-02\575-02-153.dwg

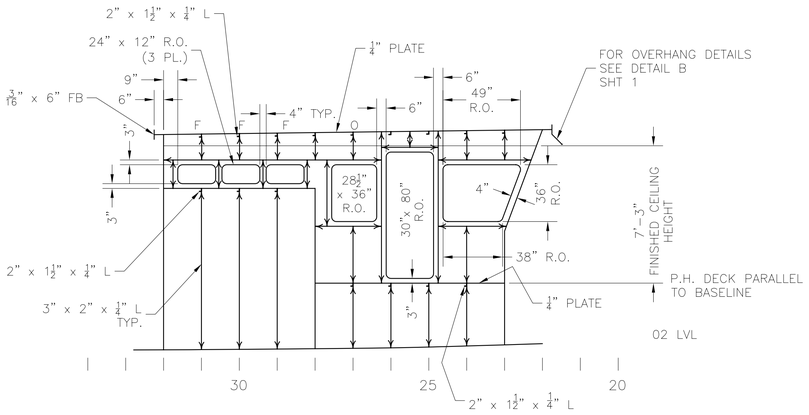

SECTION C-C

PILOT HOUSE PORT BHD 10'-0" OFF C.L.
LKG TO PORT
SCALE: 1/4 IN = 1 FT

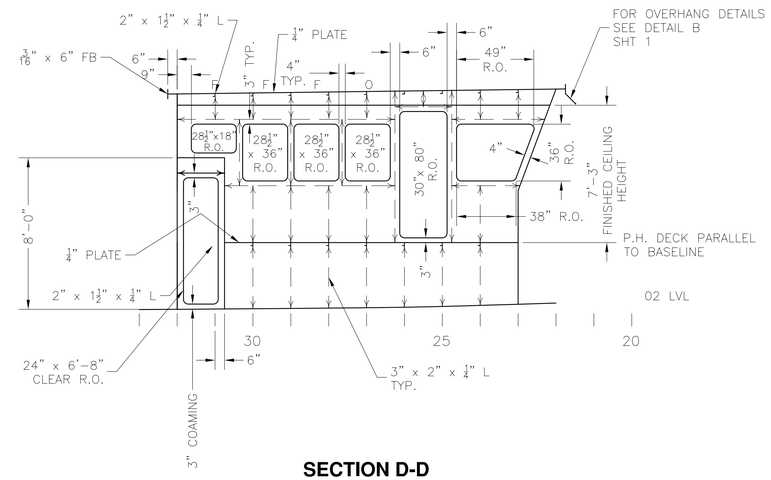

SECTION D-D

PILOT HOUSE STBD BHD 10'-0" OFF C.L.
LKG TO PORT
SCALE: 1/4 IN = 1 FT

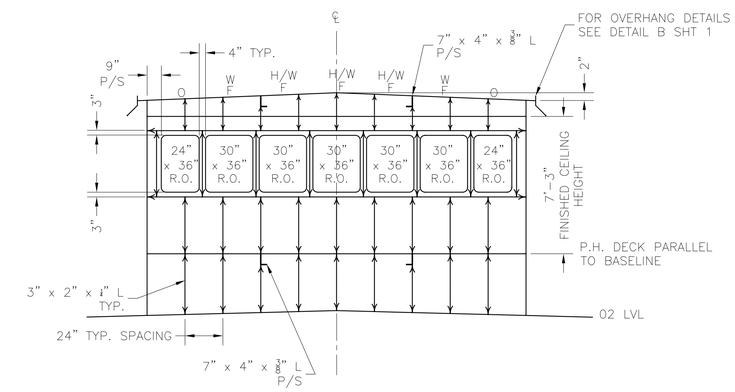

SECTION E-E

BHD ON FR 23 LKG FWD (NOT EXPANDED)
SCALE: 1/4 IN = 1 FT

WINDOW KEY	
F	FIXED WINDOW
O	OPENING WINDOW
H	HEATED WINDOW
W	WINDOW W/WIPER
H/W	HEATED WINDOW W/WIPER

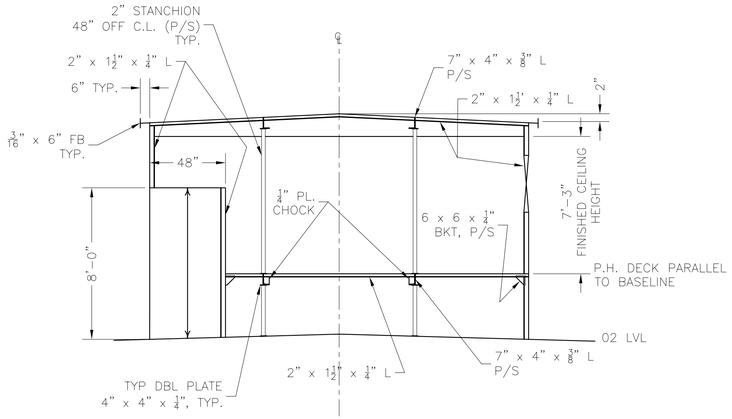

SECTION F-F

ON FR 28 LKG FWD
SCALE: 1/4 IN = 1 FT

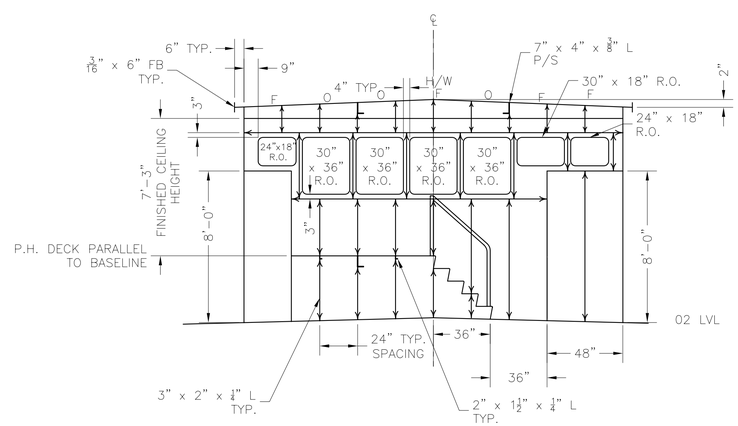

SECTION G-G

BHD ON FR 32 LKG AFT
SCALE: 1/4 IN = 1 FT

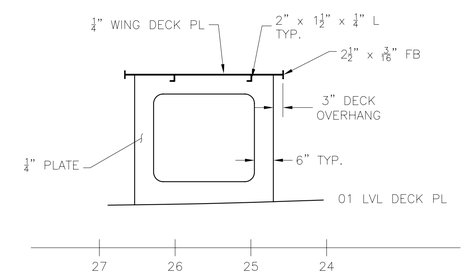

SECTION H-H

STBD WING VERT. PL, 18' OFF CL, LKG INBD
VERT. PL AT 15' OFF CL SIMILAR,
PORT SIM. AND OPPOSITE
SCALE: 1/2 IN = 1 FT

¼"=1'-0"

½"=1'-0"

Seaworthy Systems, Inc.
MARINE ENGINEERS NAVAL ARCHITECTS
P.O. BOX 965
ESSEX, CT 06426
USA
TEL: 860-767-9061
FAX: 860-767-1263

FOR
MAINE STATE FERRY SERVICE
P.O. BOX 645, 517A MAINE ST
ROCKLAND, ME 04841-0645

TITLE 154' RO/RO/PASS FERRY

PILOT HOUSE STRUCTURE

SCALE: AS STATED

DIMS IN INCHES UNLESS OTHERWISE STATED

SIZE	DRG No.	REV	SHEET
D	575-02-153	A	2 OF 2

SSI FILE No. s:\active\projnumb\575-02\Drafting\Active\575-02-153.dwg

DO NOT SCALE, IF IN DOUBT ASK

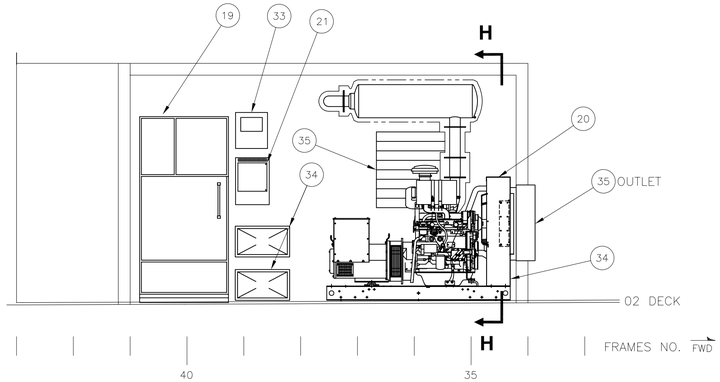

PROFILE VIEW

EMERGENCY DIESEL GENERATOR, 02 DECK, LKG TO PORT

SCALE: 3/8 IN = 1 FT

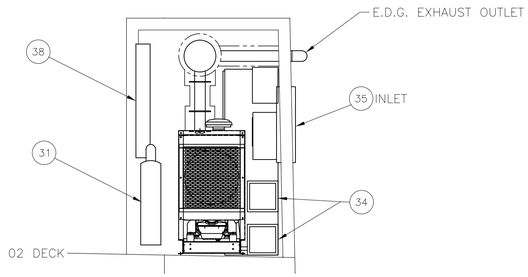

SECTION H-H

EMERGENCY DIESEL GENERATOR, 02 DECK, FR 34 1/2 LKG AFT

SCALE: 3/8 IN = 1 FT

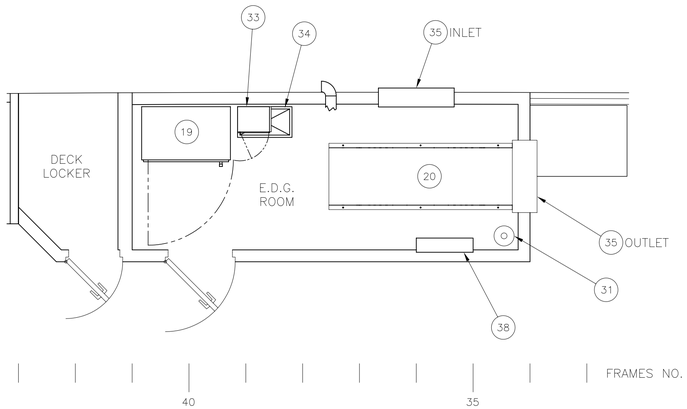

PLAN VIEW

EMERGENCY DIESEL GENERATOR, 02 DECK

SCALE: 3/8 IN = 1 FT

REVISIONS

REV.	DATE	DESCRIPTION	SHEET	ZONE	AUTHP
A	–	–			
B	–	–			
C	–	–			
D	–	–			

GENERAL NOTES:

1. ALL MATERIALS, WORKMANSHIP AND INSTALLATION TO MEET THE REQUIREMENTS OF CFR 46 SUBCHAPTER H AND BE TO THE SATISFACTION OF THE USCG OCMI.

2. ALL DIMENSIONS ARE APPROXIMATE AND SHOULD BE VERIFIED IN THE FIELD PRIOR TO INSTALLATION.

ITEM	PART CODE	DESCRIPTION	MATERIAL	QTY
44	GREENHECK SSIMO-310	FIRE DAMPER, PNEUMATIC DRIVEN AUTOMATIC	–	2
43	–	HYDRAULIC POWER PACK, FOR ELEVATOR	–	1
42	–	AIR CONDITIONER, PACKAGE TYPE, FOR ECB	–	1
41	LAMARCHE, A12B-50-24V	POWER SUPPLY, FOR MN ENGINE CONTROLS	–	2
40	LAMARCHE, A12B-30-24V	POWER SUPPLY, FOR MN ENGINE CONTROLS	–	1
39	LAMARCHE, A40-30-24V	BATTERY CHARGER, FOR SSDG BATTERIES (DUAL OUTPUT)	–	1
38	–	EDG FUEL OIL TANK, 30 GAL	–	1
37	TACO 1400-10	HYDRONIC SYSTEM CIRC. PUMP	–	3
36	–	FIRE AND BILGE PUMP	–	1
35	GREENHECK SSIMO-310	FIRE DAMPER, MOTOR DRIVEN AUTOMATIC	–	2
34	ROLLS, 8D	BATTERIES, GENERATOR STARTING BATTERY (SSDG & EDG)	–	6
33	LAMARCHE, A40-30-24V	BATTERY CHARGER, FOR EDG BATTERIES (SINGLE OUTPUT)	–	1
32	TACO 1400-20	HYDRONIC SYSTEM CIRC. PUMP	–	1
31	–	CO2 BOTTLES	–	7
30	–	LUBE OIL TANK, 450 GAL	–	1
29	–	POTABLE WATER TANK	–	1
28	–	FUEL OIL TANK, 6,000 GAL.	–	1
27	–	OILY WATER MANIFOLD	–	1
26	–	COOLANT DUMP TANK, 450 GAL	–	1
25	–	OILY WATER TANK, 450 GAL	–	1
24	–	DIRTY OIL TANK, 450 GAL	–	1
23	–	WORK BENCH	–	1
22	ROLLS, 30H108	BATTERIES, MAIN ENGINE CONTROLS POWER	–	6
21	ACME ELEC.; T-3-53362-4S	TRANSFORMERS, 3 PHASE, 30KVA	–	2
20	NORTHRN LIGHT NL1064T	EMER. DIESEL GEN.; 66KW @ 60HZ	–	1
19	INDUSTRIAL POWER SYSTEMS	SWITCHBOARD, EMERGENCY	–	1
18	–	AIR RECEIVER, 240 GAL	–	2
17	TRANE 102	UNIT HEATER	–	4
16	–	BILGE PUMP, 5 HP; 137 GPM @ 40 FT TDH	–	1
15	GREENHECK	INTAKE FAN, 24" DIA. NOM., 9000 CFM AT 1" WTR GAGE	–	2
14	HYDROPHORE	SALT WATER PUMP	–	1
13	VIKING 3380-1	WASTE OIL PUMP	–	1
12	SPEEDAIRE	AIR COMPRESSOR, 17 SCFM	–	2
11	FLOWMAX MP5	OILY WATER PUMP	–	1
10	VIKING 3380-1	COOLANT TRANSFER PUMP	–	1
9	INDUSTRIAL POWER SYSTEMS	SWITCHBOARD, MAIN	–	1
8	HYDROPHORE	FRESH WATER PUMP	–	1
7	–	SPRINKLER PUMP	–	1
6	G & L 2 x 3-7	FIRE PUMP	–	1
5	CAT C9/SD 250	THRUSTER HPU SKID- INCLUDES ENGINE, HPU, CLR & RSVR	VAR	1
4	–	BILGE MANIFOLD	–	1
3	BURNHAM, V904A	BOILER	–	1
2	NORTHERN LIGHTS 1066T	GENERATORS	–	2
1	CAT 3508B	MAIN ENGINE	–	2

ENGINE ROOM EQUIPMENT LIST

STATE OF MAINE
JOHN A. HUNTER
NO. 10737
REGISTERED PROFESSIONAL ENGINEER
10-3-05

NO.	REFERENCES
3	–
2	–
1	–

APPROVALS:	SUBMIT DATE	APPROVED BY	APPROVED DATE	RE-SUBMIT DATE	APPROVED BY	APPROVED DATE
OWNER	–	–	–	–	–	–
USCG	–	–	–	–	–	–
ABS	–	–	–	–	–	–
USPHS	–	–	–	–	–	–

0" = 1'-0"

Seaworthy Systems, Inc.
MARINE ENGINEERS NAVAL ARCHITECTS
P.O. BOX 965
ESSEX, CT 06426
USA
TEL: 860-767-9061
FAX: 860-767-1263

FOR
MAINE STATE FERRY SERVICE
P.O. BOX 645, 517A MAIN STREET
ROCKLAND, ME 04841-0645

TITLE 154' RO/RO/PASS FERRY

MACHINERY ARRANGEMENT

CHECKED BY	AUTH BY	SCALE
JAH 09-30-05	JAH 08-01-05	AS STATED
DRAWN BY	ORIG. DATE	
LAG	08-25-05	DIMS IN INCHES UNLESS OTHERWISE STATED

SIZE D | DRG No. 575-02-201 | REV. – | SHEET 1 OF 3

SSI FILE No. s:\active\projnumb\575-02\drafting\active\575-02-201.dwg

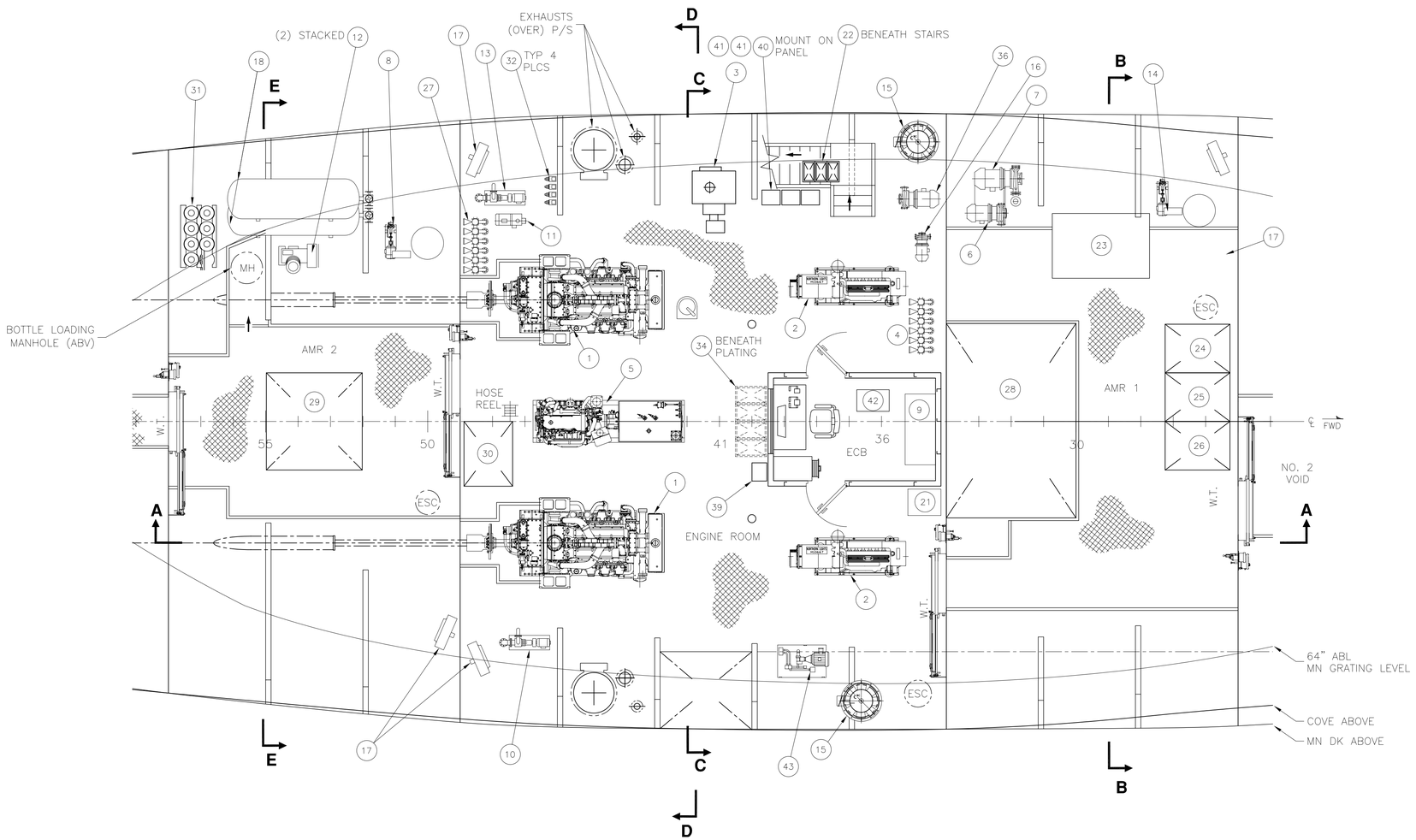

PLAN BELOW MAIN DECK

ENGINE ROOM EQUIPMENT LAYOUT

SCALE: 1/4 IN = 1 FT

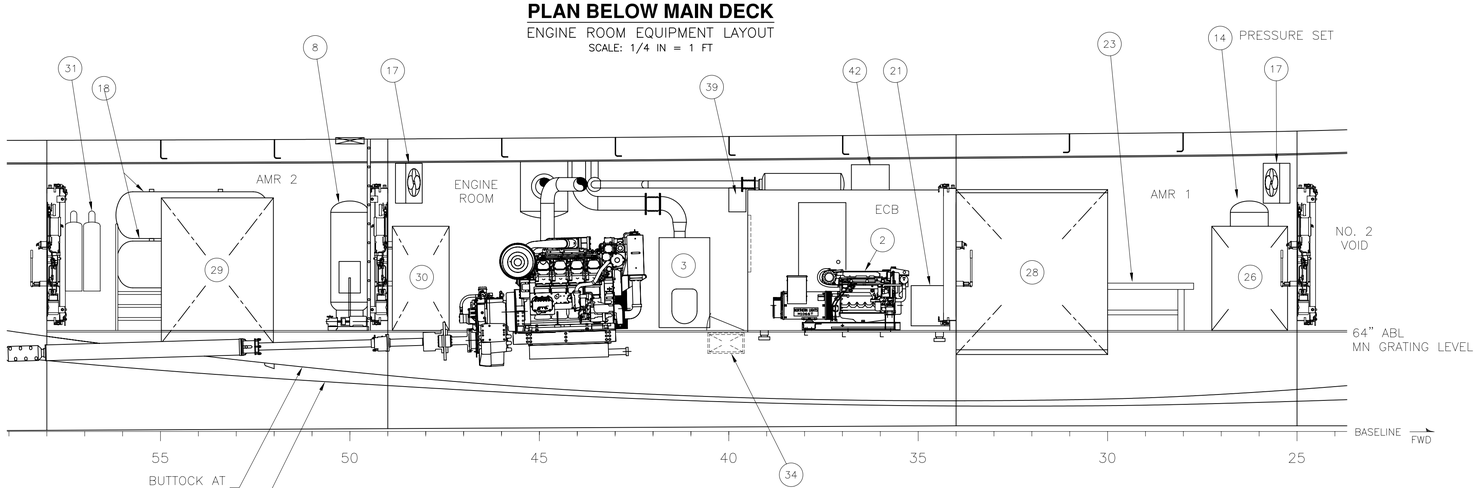

PROFILE SECTION A-A

ENGINE ROOM ON SHAFT C.L. LKG TO PORT

SCALE: 1/4 IN = 1 FT

1/4"=1'-0"

Seaworthy Systems, Inc.
P.O. BOX 965
ESSEX, CT 06426
USA
TEL: 860-767-9061
FAX: 860-767-1263

FOR
MAINE STATE FERRY SERVICE
P.O. BOX 645 517A MAIN ST
ROCKLAND, ME 04841-0645

TITLE 154' RO/RO PASS FERRY

MACHINERY ARRANGEMENT

SCALE		SIZE	DRG No.	REV.	SHEET
AS STATED	DIMS IN INCHES UNLESS OTHERWISE STATED	D	575-02-201	–	2 OF 3

SSI FILE No. s:\active\projnumb\575-02\575-02-201.dwg

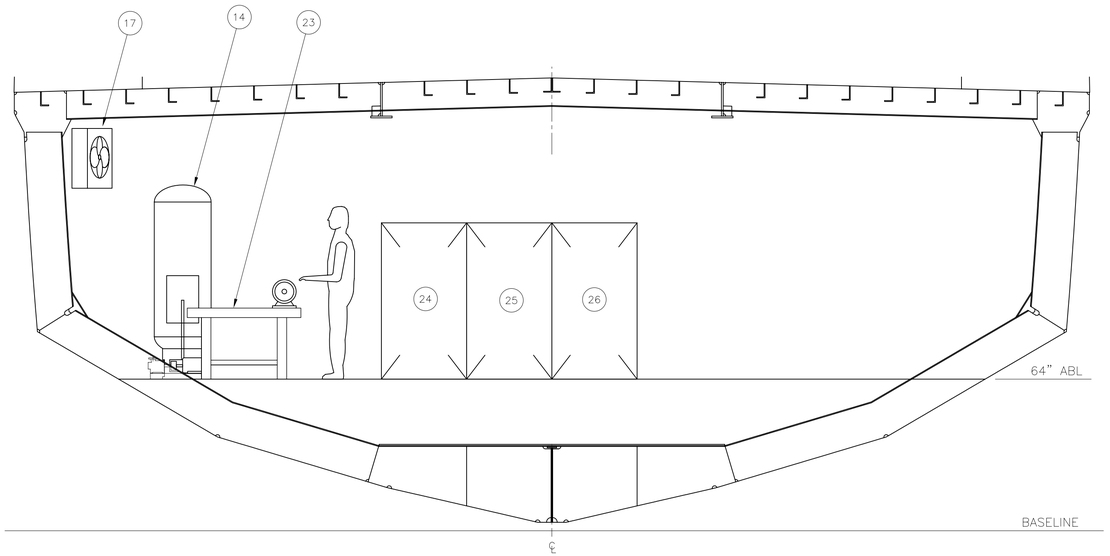

SECTION B-B

FR 29 LKG FWD

SCALE: 1/4 IN = 1 FT

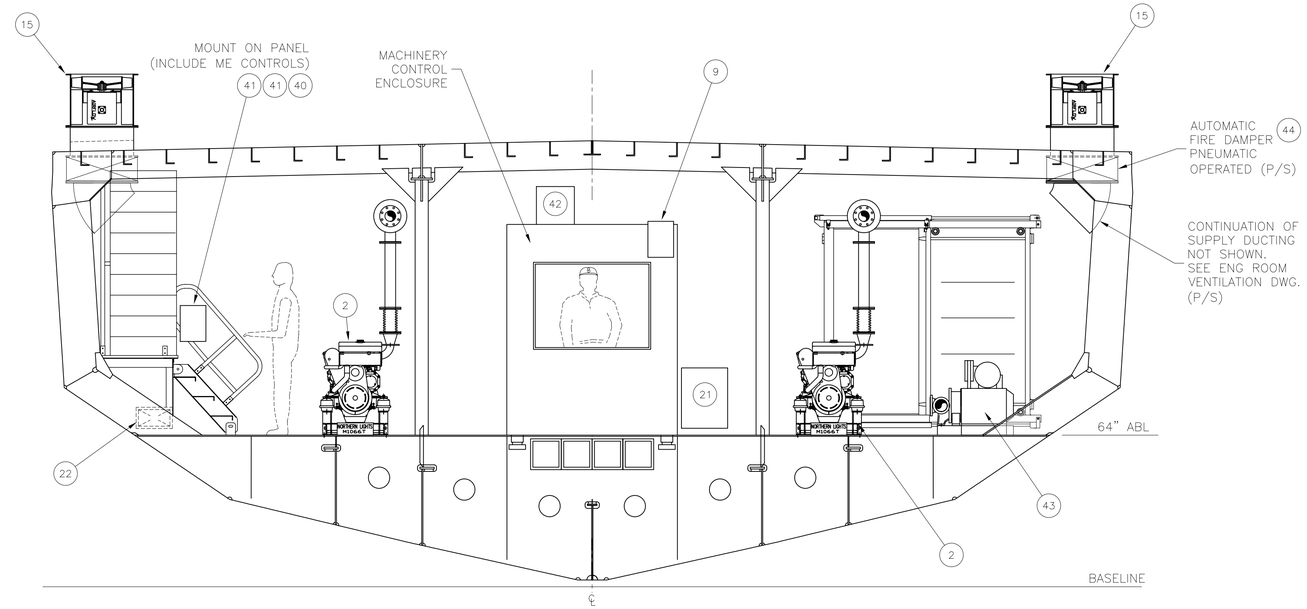

SECTION C-C

FR 42 LKG FWD

SCALE: 1/4 IN = 1 FT

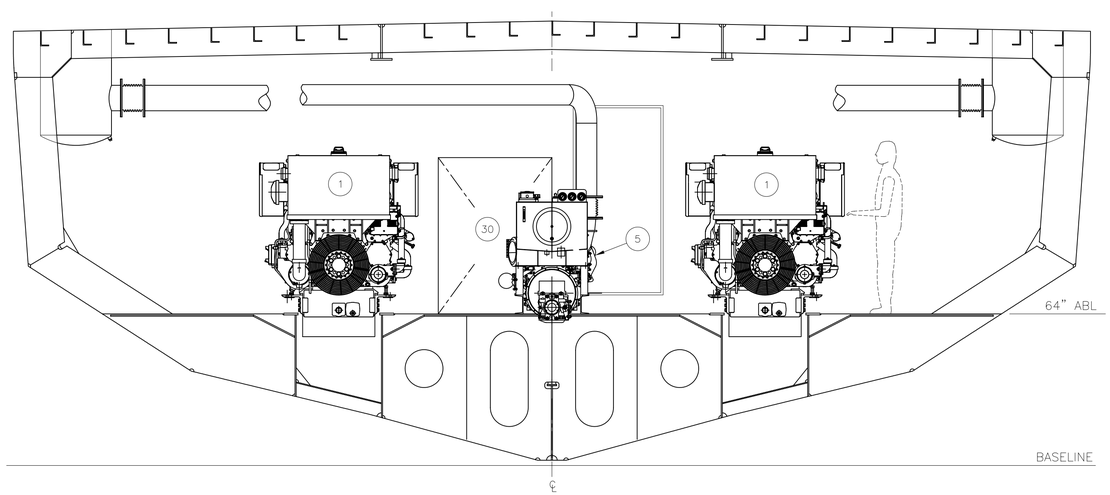

SECTION D-D

FR 42 LKG AFT

SCALE: 1/4 IN = 1 FT

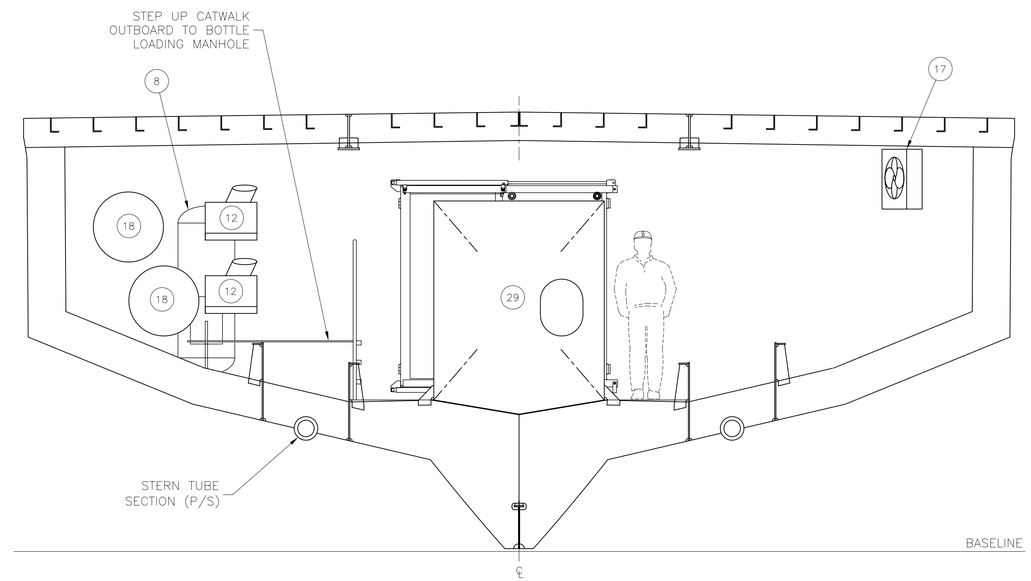

SECTION E-E

FR 54 LKG FWD

SCALE: 1/4 IN = 1 FT

1/4"=1'-0"

Seaworthy Systems, Inc.

MARINE ENGINEERS
NAVAL ARCHITECTS

P.O. BOX 965
ESSEX, CT 06426
USA
TEL: 860-767-9061
FAX: 860-767-1263

FOR

MAINE STATE FERRY SERVICE

P.O. BOX 645 517A MAIN ST
ROCKLAND, ME 04841-0645

TITLE 154' RO/RO PASS FERRY

MACHINERY ARRANGEMENT

SCALE	DIMS IN INCHES UNLESS OTHERWISE STATED
AS STATED	

SIZE	DRG No.	REV.	SHEET
D	575-02-201	—	3 OF 3

SSI FILE No. s:\active\projnumb\575-02\575-02-201.dwg

SHAFTING AS PER ABS STEEL RULES FOR <295 FT

TAILSHAFT MIN. DIAMETER:

D=100K*((H/R)*(C1/(U+C2)))^0.33
D (in)=4.32
K=1.26
H=855
R=477.6
C1=3.55
U (UTS,psi)=135,000
C2=23,180

STERN TUBE SHAFT MIN. DIAMETER:

D=100K*((H/R)*(C1/(U+C2)))^0.33
D (in)=3.95
K=1.15
H=855
R=477.6
C1=3.55
U (UTS,psi)=135,000
C2=23,180

COUPLING FITTED BOLT DIAMETER:

db=0.65*(D^3(U+c)/NBUb)^0.5"
db (in)=0.55
D=4.3
U, UTS, psi OF SHAFT=135,000
c=23,180
N=14
B=12.795
Ub, UTS, psi OF BOLT=100,000 (min)

REVISIONS

REV.	DATE	DESCRIPTION	SHEET	ZONE	AUTH#
A	–	–			
B	–	–			
C	–	–			
D	–	–			

GENERAL NOTES:

1. ALL MATERIALS, WORKMANSHIP AND INSTALLATION TO MEET THE REQUIREMENTS OF CFR 46 SUBCHAPTER H AND ABS, AND BE TO THE SATISFACTION OF THE USCG OCMI.

2. ALL DIMENSIONS ARE APPROXIMATE AND SHOULD BE VERIFIED IN THE FIELD PRIOR TO INSTALLATION.

3. QUANTITIES PROVIDED IN BILL OF MATERIALS ARE PER ONE ENGINE/SIDE ONLY.

4. SHAFT COUPLING BOLTS TO HAVE MINIMUM 100,000 PSI TENSILE STRENGTH.

5. OWNER TO APPROVE OF DUAL SHAFT BRAKE FOUNDATION FINAL DESIGN AND INSTALLATION.

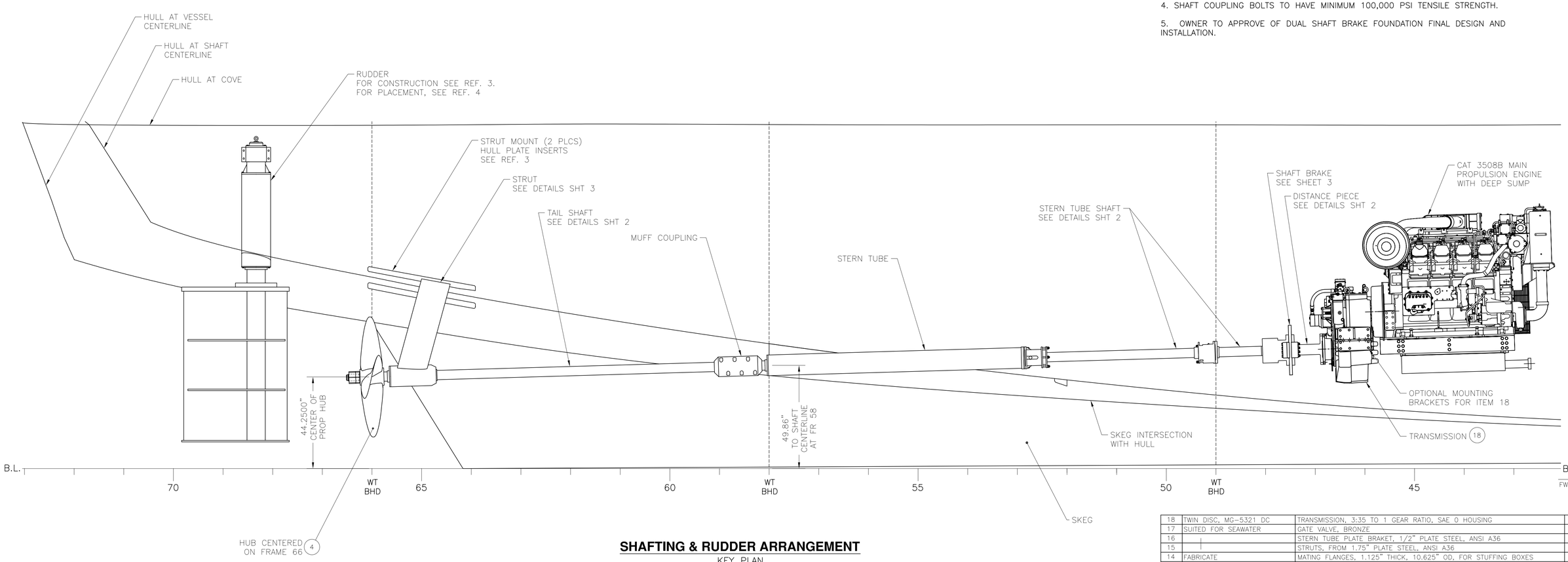

SHAFTING & RUDDER ARRANGEMENT

KEY PLAN

SCALE: 1/2 IN = 1 FT

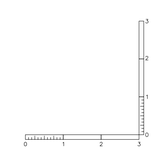

ITEM	PART CODE	DESCRIPTION	QTY
18	TWIN DISC, MG-5321 DC	TRANSMISSION, 3:35 TO 1 GEAR RATIO, SAE 0 HOUSING	
17	SUITED FOR SEAWATER	GATE VALVE, BRONZE	
16		STERN TUBE PLATE BRAKET, 1/2" PLATE STEEL, ANSI A36	2
15		STRUTS, FROM 1.75" PLATE STEEL, ANSI A36	2
14	FABRICATE	MATING FLANGES, 1.125" THICK, 10.625" OD, FOR STUFFING BOXES	2
13	TWIN DISC SUPPLY FOR MG5321	COMPANION FLANGE, OPTIONAL ITEM WITH TWIN DISC MG5321 GEAR	1
12	MATHERS SB30	SHAFT BRAKE (DUAL BRAKE SHOES)	1
11	DURAMAX FIG 1790 CODE 0512	STUFFING BOX, BHD, 5.5", GREASE SERVICE, MALE PILOT TYPE 10	1
10	DURAMAX FIG 1789 CODE 0512	STUFFING BOX, FWD STERN TUBE, 5.5", WATER SERVICE, FEMALE RECESS	1
9	FABRICATE	SHAFT SLEEVE, 5.5" OD & 4.5" ID, BRONZE	8'
8	KAHLENBERG, DWG 2-3928B	MUFF COUPLING, 4.5" SHAFT	1
7	DURAMAX 861402100, ERASE	FWD STERN TUBE BEARING, 5.5" FLANGED, SOLID, NAVAL BRASS	1
6	DURAMAX 861402100, ERASE	STRUT OR AFT STERN TUBE BEARING, 5.5" FLANGED, SOLID, NAVAL BRASS	2
5	–	STRUT & STERN TUBE, 10" OD x 7" ID MECH TUBE, CARBON STL	12.5'
4	MICHIGAN WHEEL	PROPELLER, 58" DIAM, 45" PITCH, 4 BLADE MICHIGAN WORKHORSE TYPE	1
3		TRANSMISSION DISTANCE PIECE, CS A106B	1
2		STERN TUBE SHAFT, 4.5", AQUAMET 17	1
1	FABRICATE	TAIL SHAFT, 4.5", AQUAMET 17	1

BILL OF MATERIALS

NO.	REFERENCES
5	–
4	RUDDER ARRANGEMENT, 154' PASS. FERRY, DWG NO. 575-02-562
3	SCANTLINGS BELOW MAIN DECK, 154' PASS. FERRY, DWG NO. 575-02-111
2	OUTLINE DIMENSIONS, MUFF COUPLING, 4.5" BORE, KAHLENBERG BROS. CO. DWG NO. 2-3928 REV B, 9/91
1	SPECIFICATIONS, PIPING & VALVE MATERIAL STANDARDS

APPROVALS:	SUBMIT DATE	APPROVED BY	APPROVED DATE	RE-SUBMIT DATE	APPROVED BY	APPROVED DATE
OWNER	–	–	–	–	–	–
USCG	–	–	–	–	–	–
ABS	–	–	–	–	–	–
USPHS	–	–	–	–	–	–

STATE OF MAINE JOHN A. HUNTER NO. 10737 REGISTERED PROFESSIONAL ENGINEER 10-3-05

Seaworthy Systems, Inc.
MARINE ENGINEERS NAVAL ARCHITECTS
P.O. BOX 965
ESSEX, CT 06426
USA
TEL: 860-767-9061
FAX: 860-767-1263

FOR
MAINE STATE FERRY SERVICE
P.O. BOX 645, 517A MAIN STREET
ROCKLAND, ME 04841-0645

TITLE 154' RO/RO/PASS FERRY

SHAFTING & STRUT ARRANGEMENT

CHECKED BY	AUTH'D BY	SCALE
JAH –	WAW –	AS SHOWN
DRAWN BY	ORIG'L DATE	
ERS	08-19-05	DIMS IN INCHES UNLESS OTHERWISE STATED

SIZE	DRG No.	REV.	SHEET
D	575-02-243	–	1 OF 3

SSI FILE No. s:\active\projnumb\575-02\575-02-243.dwg

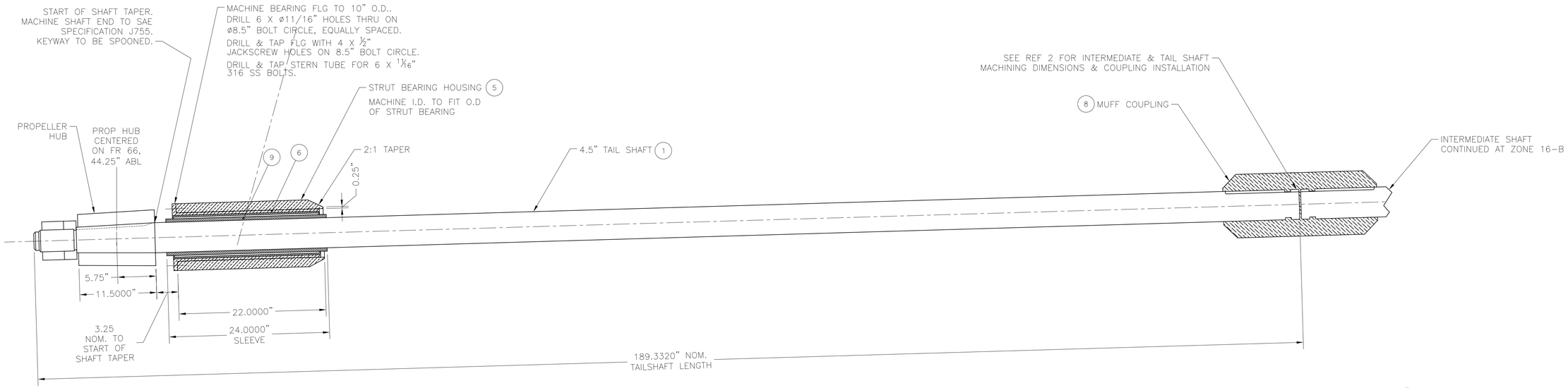

TAIL SHAFT SECTION

ARRANGEMENT

SCALE: 1 1/2 IN = 1 FT

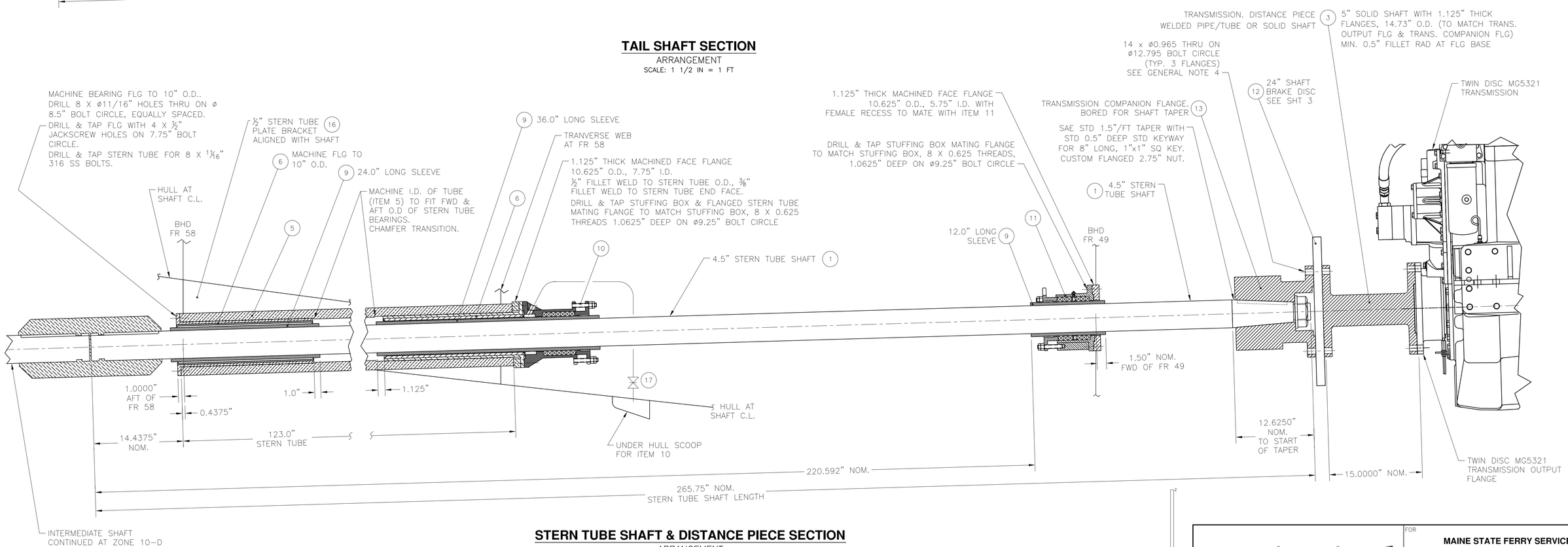

STERN TUBE SHAFT & DISTANCE PIECE SECTION

ARRANGEMENT

SCALE: 1 1/2 IN = 1 FT

1½"=1'-0"

Seaworthy Systems, Inc.
MARINE ENGINEERS NAVAL ARCHITECTS
P.O. BOX 965
ESSEX, CT 06426
USA
TEL: 860-767-9061
FAX: 860-767-1263

FOR
MAINE STATE FERRY SERVICE
P.O. BOX 645, 517A MAIN STREET
ROCKLAND, ME 04841-0645

TITLE 154' RO/RO/PASS FERRY

SHAFTING & STRUT ARRANGEMENT

SCALE		SIZE	DRG No.	REV.	SHEET
AS SHOWN	DIMS IN INCHES UNLESS OTHERWISE STATED	D	575-02-243	—	2 OF 3

SSI FILE No. s:\active\projnumb\575-02\575-02-243.dwg

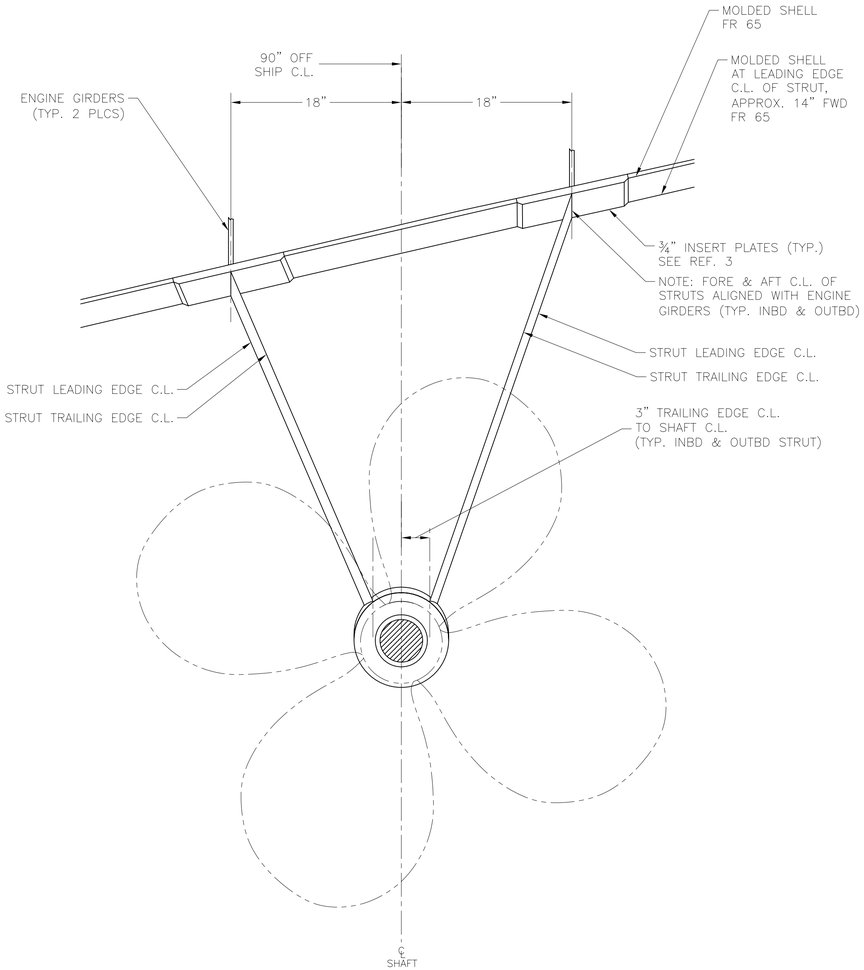

PROPELLER STRUT ARRANGEMENT

STBD, LKG FWD FROM AFT STRUT BARREL END
(PORT OPPOSITE HAND)
SCALE: 1 1/2 IN = 1 FT

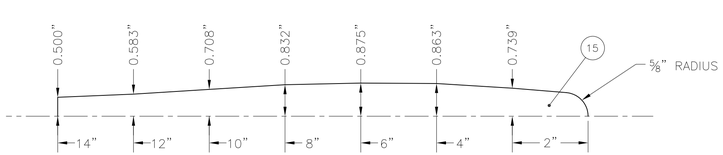

STRUT SECTION

HALF BREADTHS
SCALE: 6 IN = 1 FT

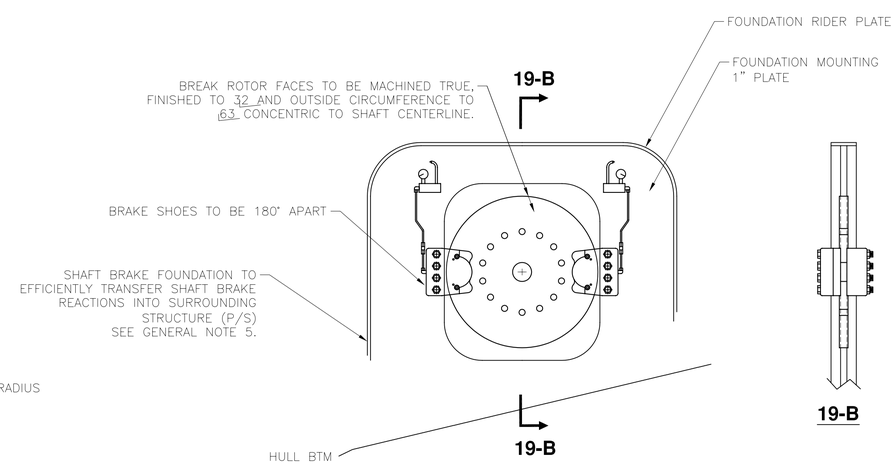

DUAL SHAFT BRAKE

WITH CONCEPTUAL FOUNDATION
SCALE: 1 IN = 1 FT

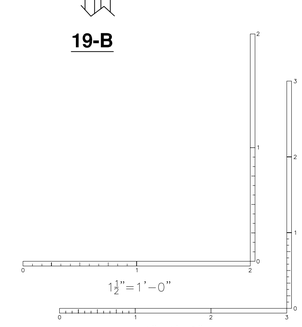

Seaworthy Systems, Inc.
MARINE ENGINEERS
NAVAL ARCHITECTS
P.O. BOX 965
ESSEX, CT 06426
USA
TEL: 860-767-9061
FAX: 860-767-1263

FOR
MAINE STATE FERRY SERVICE
P.O. BOX 645, 517A MAIN STREET
ROCKLAND, ME 04841-0645

TITLE 154' RO/RO/PASS FERRY

SHAFTING & STRUT ARRANGEMENT

SCALE: AS SHOWN

DIMS IN INCHES UNLESS OTHERWISE STATED

SIZE	DRG No.	REV.	SHEET
D	575-02-243	—	3 OF 3

SSI FILE No. s:\active\projnumb\575-02\575-02-243.dwg

575-02-259

MATERIAL SCHEDULE

SERVICE	DESIGN TEMP & PRESSURE	SIZE	PIPE	TAKEDOWN JOINTS				FITTINGS	VALVES	
				MATERIAL	GASKETS	BOLTS	NUTS		BODY	TRIM
DIESEL EXHAUST PIPING	775° F MAX.	ALL	SMLS OR E.R.W. CARBON STL, ASTM A106 GR B OR A53 GR B TY S OR E	FLANGES: SOCKET WELD, WELD NECK OR SLIP-ON, ASTM A105 FLANGES: PLATE, CARBON STL, ASTM A515 GR 70	1/8" GRAPHITE WITH NICKLE GASKET, CHESTERTON PRODUCT 459 OR EQIVALENT	CrMo STL, ASTM A193 GR B7	CARBON STL, ASTM A194 GR 2H	FLANGED, CARBON STL, ASTM A216 GR WCB OR A105 BUTTWELD, CARBON STL, ASTM A234 GR WPB	N/A	N/A
	1100° F MAX.	ALL	SMLS CR-MO STL, ASTM A335 GR P11 OR PLATE FORMED CR-MO STL., ASTM A387	FLANGES: SOCKET WELD OR WELD NECK, CR-MO STL, ASTM A182 GR F11 FLANGES: PLATE, CrMo STL, ASTM A387		CrMoV STL., ASTM A193 GR B16	CrMo STL, ASTM A 194 GR 4	N/A	N/A	N/A

DO NOT SCALE, IF IN DOUBT ASK

REVISIONS

REV.	DATE	DESCRIPTION	SHEET	ZONE	AUTHP
A	–	–			
B	–	–			
C	–	–			
D	–	–			

GENERAL NOTES:

1. ALL MATERIALS, WORKMANSHIP AND INSTALLATION TO MEET THE REQUIREMENTS OF CFR 46 SUBCHAPTER H AND BE TO THE SATISFACTION OF THE USCG OCMI.

2. ALL DIMENSIONS ARE APPROXIMATE AND SHOULD BE VERIFIED IN THE FIELD PRIOR TO INSTALLATION.

3. ALL 90 & 45 ELLS TO BE LONG RADIUS TYPE.

4. ALL SILENCERS TO HAVE 35 TO 45 DB AVERAGE ATTENUATION.

5. EXPANSION JOINTS BETWEEN THE ENGINE OUTLET CONNECTION AND THE SILENCER INLET CONNECTION SHALL HAVE AN INNER 321 STAINLESS STEEL PLY.

6. THE SILENCER AND EXHAUST PIPING SYSTEM SHALL BE MOUNTED SO THAT ITS WEIGHT IS NOT SUPPORTED BY THE ENGINE.

7. SILENCERS AND EXHAUST PIPING SHALL BE MOUNTED WITH NOISE AND VIBRATION ISOLATING TYPE MOUNTING SUPPORTS.

8. WHERE EXHAUST PIPE PENETRATES A WALL OR ROOF, A THIMBLE SHALL BE PROVIDED SUCH THAT THE EXHAUST PIPE "FREE FLOATS" THROUGH THE THIMBLE.

9. EXHAUST PIPING & SILENCERS SHALL BE MOUNTED AS CLOSE TO OVERHEADS AS POSSIBLE (ALLOWING FOR INSULATION).

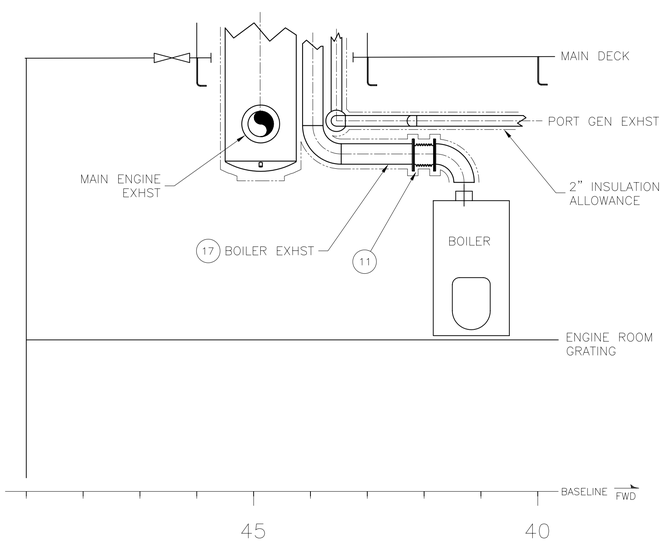

ELEVATION VIEW 7-A

PORT SIDE EXHAUSTS, LKG OUTBD

SCALE: 3/8 IN = 1 FT

ITEM	PART CODE	DESCRIPTION	MATERIAL	QTY
17	–	PIPE, 8", SCHED 10, 0.148 WALL THK	–	A/R
16	WTC MODEL, EM PRODUCTS	ROOF THIMBLE, SIZED PER EXHAUST PIPE	CARBON STL	7
15	RCP MODEL, EM PRODUCTS	RAIN CAPS, PIPE, HINGED, SIZED PER ENGINE EXHAUST	STAINLESS STL	5
14		8", "CHINAMANS" CAP VENT CAP, FOR BOILER EXHAUST	–	1
13	30MCMVSF W/321 SS LINER, FLEX-WELD	4" EXPANSION JOINT, 7.688" LOA	–	4
12	30MCLVSF W/321 SS LINER, FLEX-WELD	4" EXPANSION JOINT, 10.25" LOA	–	3
11	30MCLVSF W/321 SS LINER, FLEX-WELD	8" EXPANSION JOINT, 8.875" LOA	–	3
10	30MCMVSF W/321 SS LINER, FLEX-WELD	10" EXPANSION JOINT, 9.875" LOA	–	4
9	PFL-04, EM PRODUCTS	FLANGE, 125/150, ½" THK, ANSI DRILLED WELDED PL FLG	–	A/R
8	PFL-08, EM PRODUCTS	FLANGE, 125/150, ½" THK, ANSI DRILLED WELDED PL FLG	–	A/R
7	PFL-10, EM PRODUCTS	FLANGE, 125/150, ½" THK, ANSI DRILLED WELDED PL FLG	–	A/R
6	–	PIPE, 4", SCHED 40, 0.237 WALL THK	–	A/R
5	–	PIPE, 8", SCHED 20, 0.25 WALL THK	–	A/R
4	–	PIPE, 10", SCHED 20, 0.25 WALL THK	–	A/R
3	JHS-04, EM PRODUCTS, HOSP GR.	SHIP SERVICE GENSET & EDG EXHAUST SILENCER	–	3
2	JHE-08, EM PRODUCTS, HOSP GR.	BOW THRUSTER ENG SILENCER	–	1
1	JHS-10, EM PRODUCTS, HOSP GR.	M.E. EXHAUST SILENCER	–	2

EQUIPMENT LIST

3/8" = 1'-0"

STATE OF MAINE JOHN A. HUNTER NO. 10737 REGISTERED PROFESSIONAL ENGINEER 10-3-05

NO.	REFERENCES
3	–
2	–
1	–

APPROVALS:	SUBMIT DATE	APPROVED BY	APPROVED DATE	RE-SUBMIT DATE	APPROVED BY	APPROVED DATE
OWNER	–	–	–	–	–	–
USCG	–	–	–	–	–	–
ABS	–	–	–	–	–	–
USPHS	–	–	–	–	–	–

Seaworthy Systems, Inc.
P.O. BOX 965
ESSEX, CT 06426
USA
TEL: 860-767-9061
FAX: 860-767-1263
MARINE ENGINEERS NAVAL ARCHITECTS

FOR
MAINE STATE FERRY SERVICE
P.O. BOX 645, 517A MAIN STREET
ROCKLAND, ME 04841-0645

CHECKED BY	AUTHD BY	SCALE
JAH 09-30-05	JAH 09-30-05	AS STATED
DRAWN BY	ORIGD DATE	
ERS	9-28-05	DIMS IN INCHES UNLESS OTHERWISE STATED

TITLE 154' RO/RO/PASS FERRY

MACHINERY EXHAUST

SIZE	DRG No.	REV.	SHEET
D	575-02-259	–	1 OF 3

SSI FILE No. s:\active\projnumb\575-02\drafting\active\575-02-259.dwg

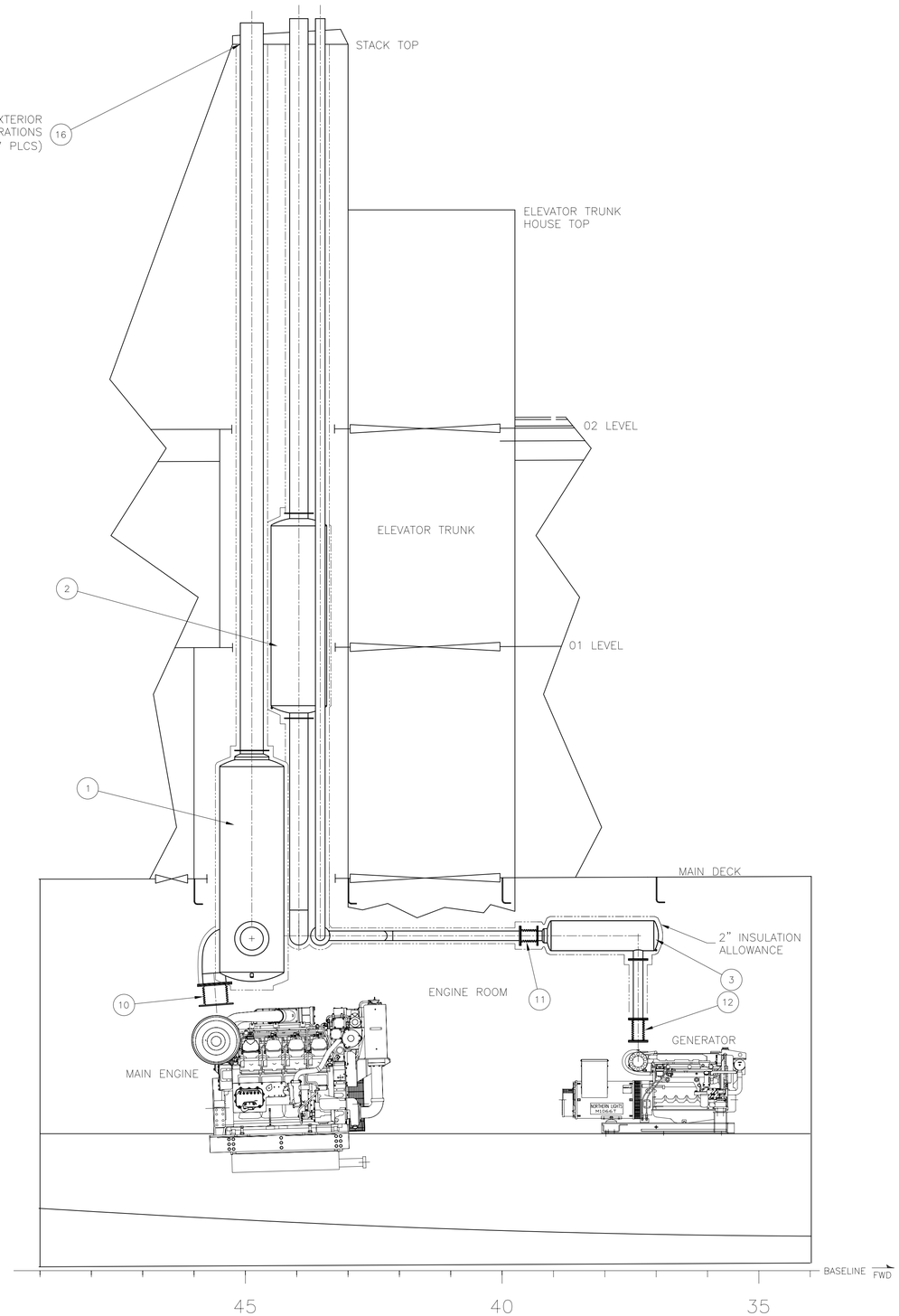

ELEVATION VIEW 15-A

ENGINE EXHAUSTS STBD TRUNK (PORT SIM & OPP)

SCALE: 3/8 IN = 1 FT

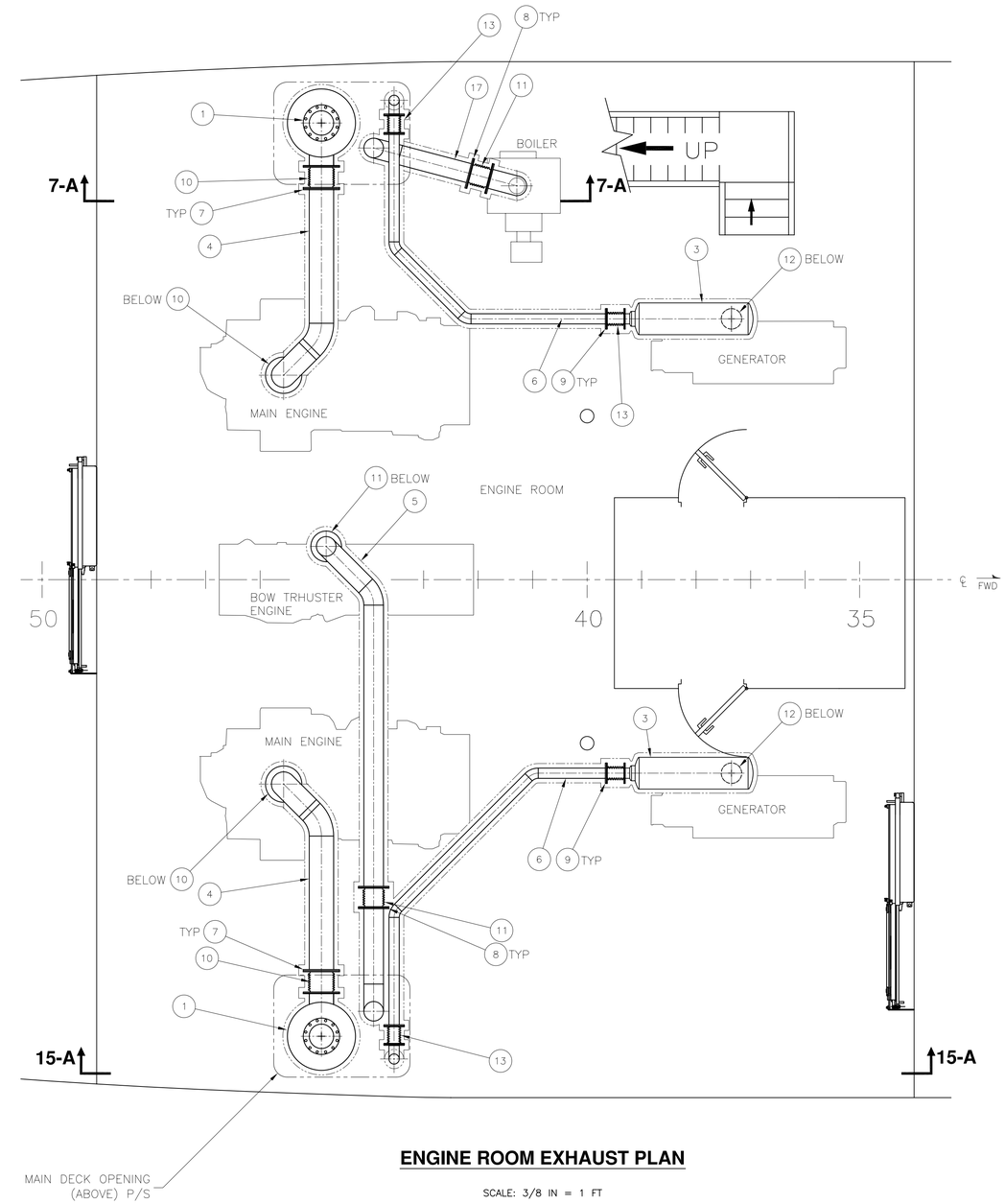

ENGINE ROOM EXHAUST PLAN

SCALE: 3/8 IN = 1 FT

3/8"=1'-0"

Seaworthy Systems, Inc.
MARINE ENGINEERS NAVAL ARCHITECTS
P.O. BOX 965
ESSEX, CT 06426
USA
TEL: 860-767-9061
FAX: 860-767-1263

FOR
MAINE STATE FERRY SERVICE
P.O. BOX 645 517A MAIN ST
ROCKLAND, ME 04841-0645

TITLE 154' RO/RO/PASS FERRY

MACHINERY EXHAUST

SCALE	DIMS IN INCHES UNLESS OTHERWISE STATED	SIZE	DRG No.	REV.	SHEET
AS STATED		D	575-02-259	—	2 OF 3

SSI FILE No. s:\active\projnumb\575-02\575-02-259.dwg

e3e-02-320

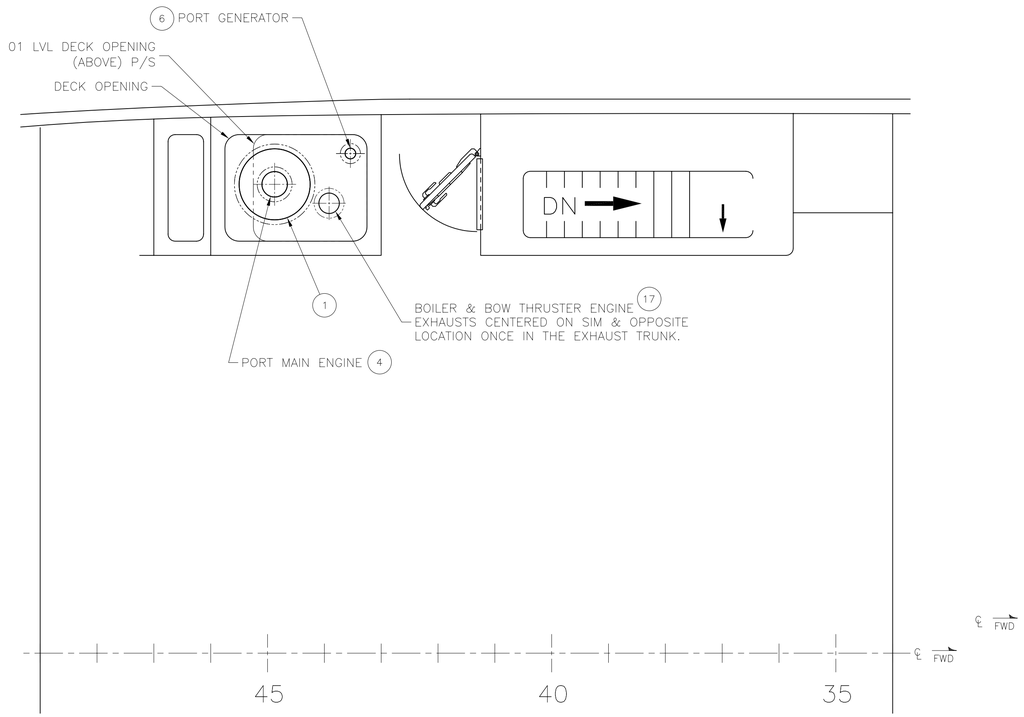

MAIN DECK PLAN EXHAUST

PORT SIDE, STBD SIM & OPP
SCALE: 3/8 IN = 1 FT

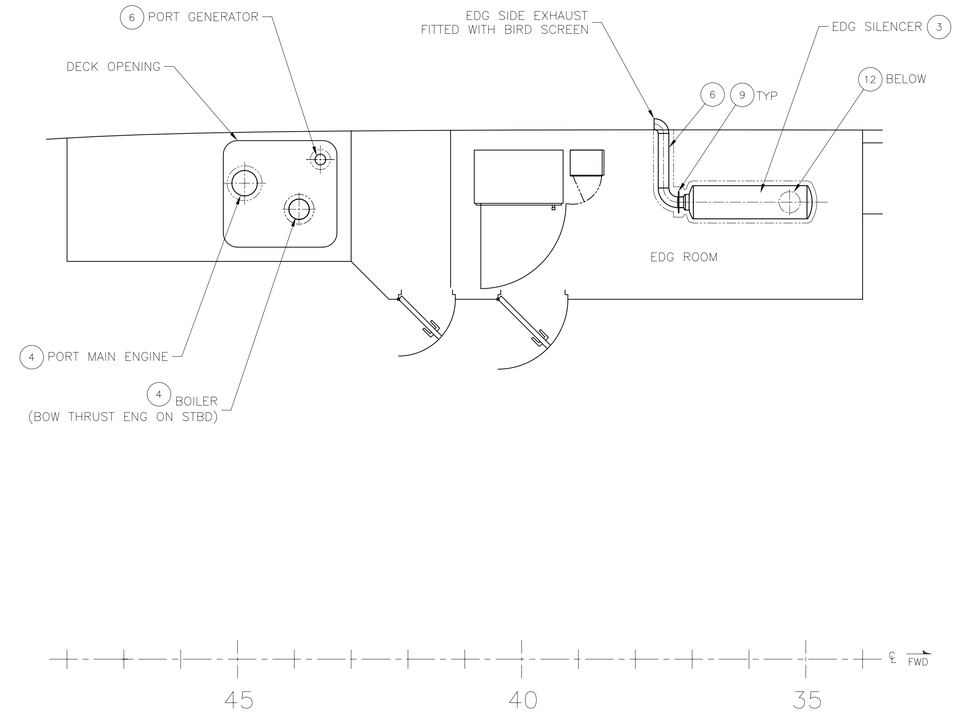

02 LEVEL PLAN EXHAUST

PORT SIDE, STBD SIM & OPP
SCALE: 3/8 IN = 1 FT

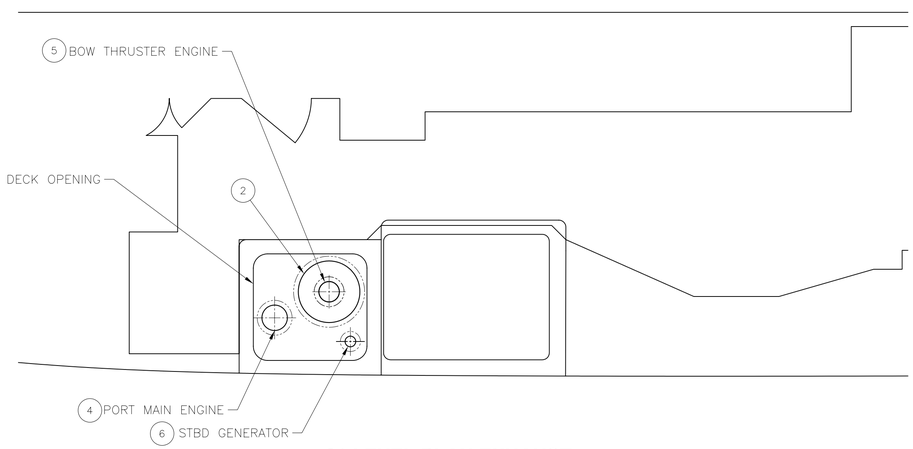

01 LEVEL PLAN EXHAUST

STBD SIDE, PORT SIM & OPP
SCALE: 3/8 IN = 1 FT

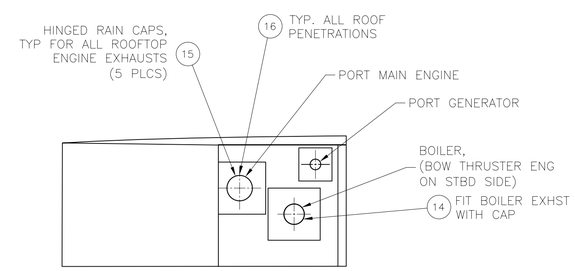

PORT STACK TOP

STBD SIM & OPP
SCALE: 3/8 IN = 1 FT

3/8"=1'-0"

Seaworthy Systems, Inc.
MARINE ENGINEERS NAVAL ARCHITECTS
P.O. BOX 965
ESSEX, CT 06426
USA
TEL: 860-767-9061
FAX: 860-767-1263

SCALE: AS STATED

DIMS IN INCHES UNLESS OTHERWISE STATED

FOR
MAINE STATE FERRY SERVICE
P.O. BOX 645 517A MAIN ST
ROCKLAND, ME 04841-0645

TITLE 154' RO/RO/PASS FERRY

MACHINERY EXHAUST

SIZE	DRG No.	REV.	SHEET
D	575-02-259	—	3 OF 3

SSI FILE No. s:\active\projnumb\575-02\575-02-259.dwg

575-02-261

MATERIAL SCHEDULE

SERVICE	DESIGN TEMP & PRESSURE	SIZE	PIPE	TAKEDOWN JOINTS MATERIAL	TAKEDOWN JOINTS GASKETS	TAKEDOWN JOINTS NUTS	TAKEDOWN JOINTS BOLTS	FITTINGS	VALVES BODY	VALVES TRIM
FUEL OIL	BELOW 150° F & 150 PSI (CLASS 2) OPERATING PRESSURE: 150 PSIG & BELOW	2 1/2"	SMLS. OR E.R.W. CARBON STL., ASTM A106 GR B OR A53 GR B TY S OR E	FLGD: SW, WELDNECK OR SLIP ON, CARBON STL. ASTM A105	–	CARBON STL., ASTM A307 GR B	CARBON STL., ASTM A563 GR A	BUTTWELD: CARBON STL., ASTM A234 GR WPB	FLGD., D.I. ASTM A395 OR CARBON STL. ASTM A216 GR WCB OR A105	BRONZE
		2" & BELOW		UNIONS, SW OR SCRD., CARBON STEEL ASTM A105				SW OR SCRD: CARBON STL., ASTM A234 GR WPB OR A105	SW OR SCRD: CARBON STL., ASTM A234 GR WPB OR A105	BRONZE

SYMBOLS LIST

	SCREW–DOWN GLOBE VALVE		FLEXIBLE HOSE/CONNECTOR
	BALL VALVE		SUCTION BELLMOUTH
	SWING CHECK VALVE		HOSE CONNECTOR C/W CAP & KEEP CHAIN
P	PRESSURE GAUGE	3/4"	LINE SIZE
HLA	HIGH LEVEL ALARM		ITEM SUPPLIED W/PRINCIPAL COMPONENT
LLA	LOW LEVEL ALARM		SIMPLEX FILTER
L	PNEUMATIC LEVEL INDICATOR		DUPLEX FILTER WITH CHANGE–OVER HANDLE/VALVES
F	FLOW VISUAL INDICATOR		PNEUMATIC OPER. QUICK CLOSING VLV
TLI	TLI		TRIPLEX FILTER WITH CHANGE–OVER HANDLE/VALVES
	HAND TRANSFER PUMP		

A

CALCULATIONS

FUEL OIL CONSUMPTION

1. MAIN ENGINES
POWER @ 90% MCR = 1600 BHP (2 @ 800 BHP)
SPECIFIC FUEL CONSUMPTION = 58 GPH
REQUIRED F.O. PER 1.2 HOUR VOYAGE = 70 GAL
DAILY CONSUMPTION @ 90% MCR (ASSUMING 12 HOUR SERVICE DAY) = 840 GAL/DAY

2. BOW THRUSTER ENGINE
POWER @ 90% MCR = 350 BHP
FUEL RATE = 26 GPH

3. MAIN GENERATOR ENGINE
POWER @ 60% MCR = 60 kWe
FUEL RATE * = 5 GPH

4. EMERGENCY GENERATOR ENGINE
POWER @ 50% MCR = 33 kWe
FUEL RATE * = 3 GPH

REVISIONS

REV.	DATE	DESCRIPTION	SHEET	ZONE	AUTH#
A	1/23/06	CHANGED SCHEMATIC FROM PNEUMATIC TRANSFER PUMP TO HAND	2	B–13	JAH
		CHANGED MATERIAL FROM PNEUMATIC TRANSFER PUMP TO HAND	1	A–1	JAH
B	–	–			
C	–	–			
D					

GENERAL NOTES:

1. ALL MATERIALS, WORKMANSHIP AND INSTALLATION TO MEET THE REQUIREMENTS OF CFR 46 SUBCHAPTER H AND ABS, AND BE TO THE SATISFACTION OF THE USCG OCMI.

2. ALL VALVES, COCKS AND CONNECTIONS SHALL BE READILY ACCESSIBLE FOR MAINTENANCE AND OPERATION. PIPE RUNS SHALL BE DESIGNED FOR EASY REMOVAL.

3. DECK CONNECTIONS TO BE FITTED WITH BRASS PLATES IDENTIFYING TYPE OF OIL.

4. PIPE JOINTS SHALL BE PROVIDED FOR EASE OF REMOVAL OF PIPES, VALVES AND EQUIPMENT TO THE DISCRETION OF THE OWNER'S REPRESENTATIVE.

5. PIPING PASSING THROUGH OIL OR WATERTIGHT BOUNDARIES SHALL BE FITTED WITH SLEEVES WELDED TO THE BOUNDARY AND THE PIPING.

6. HANGERS SHALL BE PROVIDED TO SUPPORT THE PIPING. HANGER LOCATIONS SHALL BE CHOSEN TO PREVENT VISIBLE PIPE VIBRATION.

7. TAKEDOWN JOINTS SHALL BE PROVIDED WHERE NECESSARY FOR REMOVAL AND SERVICE OF EQUIPMENT.

8. TANK LEVEL INDICATORS FOR FUEL TANKS SHALL HAVE CONNECTIONS INTO THE TANK TOP ONLY.

9. PIPING TO BE PAINTED AND COLOR CODED WITH RESPECT TO FLUID CONVEYED. VALVE HANDWHEELS TO BE MARKED WITH EMBOSSED/ENGRAVED PLATES WITH REGARD TO SERVICE.

10. PIPE FLANGES CONVEYING FUEL UNDER PRESSURE SHALL BE FITTED WITH FLANGE SPRAY SHIELDS.

11. PIPING SHALL BE ROUTED AWAY FROM HOT SURFACES OR OTHER SOURCES OF IGNITION.

12. FLEXIBLE HOSES WHERE USED SHALL BE APPROVED FOR THE TYPE OF SERVICE AND LIMITED LESS THAN 30" IN LENGTH.

A

STATE OF MAINE
JOHN A. HUNTER
NO. 10737
REGISTERED PROFESSIONAL ENGINEER
10-3-05

ITEM	PART CODE	DESCRIPTION	MATERIAL	QTY
8	LEVEL ALARM	MOBREY M TYPE	SS	3
7	TLI	KING PNEUMATIC LEVEL GAGE	SS	1
6	SIMPLEX FUEL STRAINER	HAYWARD 72 3/4" SIMPLEX HAND OPERATED FUEL STRAINER, 20 MESH	CS	1
5	QUICK CLOSING VLV	PNEUMATIC OPERATED QUICK CLOSING VALVE, 2"–150 FLANGED	CS	1
4	TRANSFER PUMP	HAND ROTARY TRANSFER PUMP.	SS	1
3	FUEL FILTER	RACOR, 79/900MAX, 10 MICRON DUPLEX FILTER/WATER TRAP. USCG APPROVED W/ DIFF. PRESS. IND.		4
2	FUEL FILTER	RACOR, 79/1000MAV, 10 MICRON TRIPLEX FILTER/WATER TRAP. USCG APPROVED W/ DIFF. PRESS. IND.		2
1	DUPLEX FUEL STRAINER	HAYWARD 53BTX 2" DUPLEX HAND OPERATED FUEL STRAINER, 20 MESH	CS	1

BILL OF MATERIALS

NO.	REFERENCES
4	–
3	575–02–514, DOMESTIC VENTILATION SYSTEM DIAGRAM
2	575–02–593, WASTE OIL & OILY WATER SYSTEM DIAGRAM
1	575–02–514, TANK VENTS SYSTEM DIAGRAM

APPROVALS:	SUBMIT DATE	APPROVED BY	APPROVED DATE	RE–SUBMIT DATE	APPROVED BY	APPROVED DATE
OWNER	–	–	–	–	–	–
USCG	–	–	–	–	–	–
ABS	–	–	–	–	–	–
USPHS	–	–	–	–	–	–

Seaworthy Systems, Inc.
MARINE ENGINEERS NAVAL ARCHITECTS
P.O. BOX 965
ESSEX, CT 06426
USA
TEL: 860–767–9061
FAX: 860–767–1263

FOR
MAINE STATE FERRY SERVICE
P.O. BOX 645, 517A MAIN STREET
ROCKLAND, ME 04841–0645

CHECKED BY	AUTH° BY	SCALE
JAH 09–30–05	JAH 09–30–05	NONE
DRAWN BY	ORIG° DATE	
DR	09–20–05	DIMS IN INCHES UNLESS OTHERWISE STATED

TITLE 154' RO/RO/PASS FERRY

FUEL OIL SYSTEM DIAGRAM

SIZE	DRG No.	REV.	SHEET
D	575–02–261	A	1 OF 2

SSI FILE No. s:\active\projnumb\575–02\575–02–261.dwg

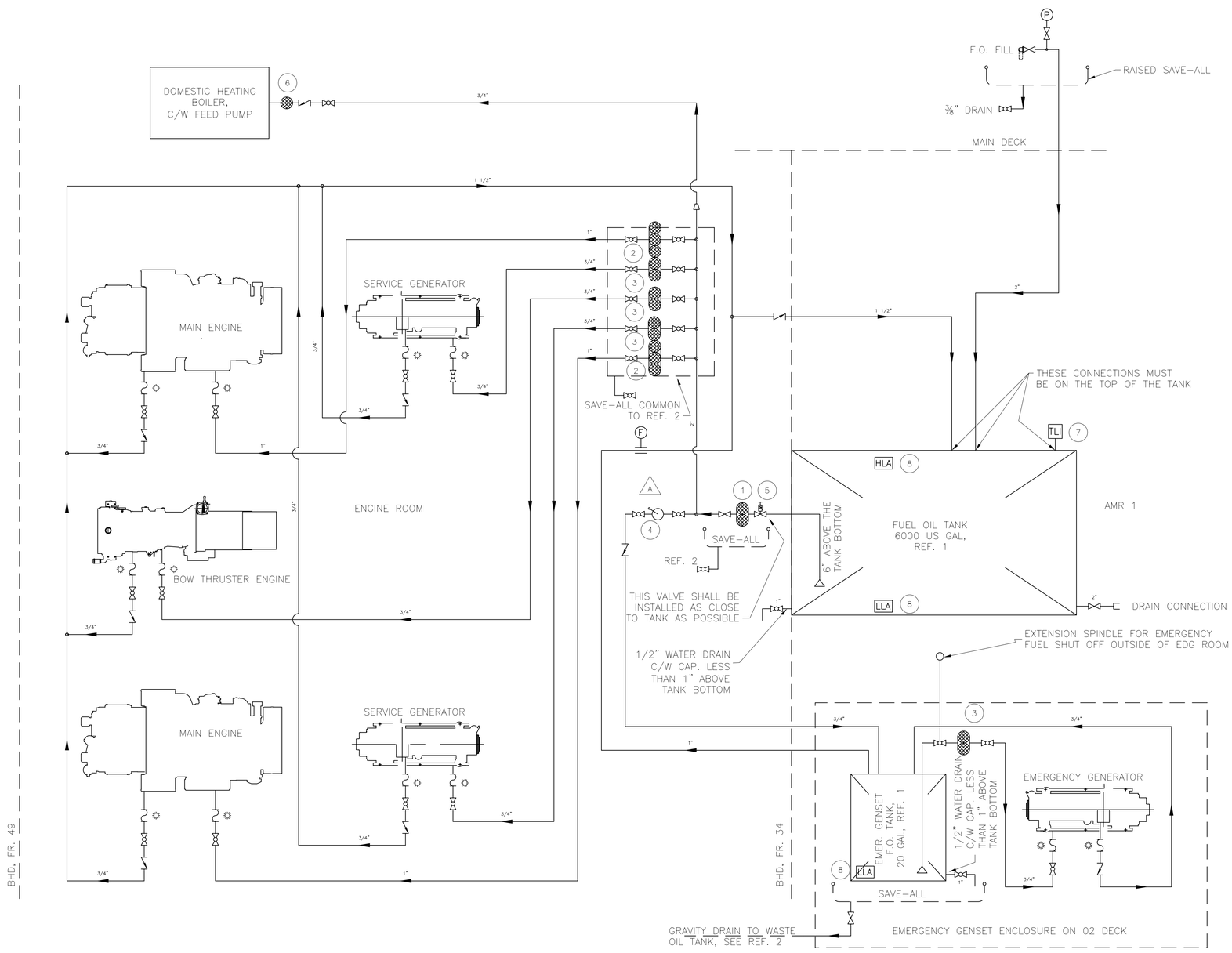

Seaworthy Systems, Inc.
MARINE ENGINEERS NAVAL ARCHITECTS
P.O. BOX 965
ESSEX, CT 06426
USA
TEL: 860-767-9061
FAX: 860-767-1263

FOR
MAINE STATE FERRY SERVICE
P.O. BOX 645, 517A MAIN STREET
ROCKLAND, ME 04841-0645

TITLE 154' RO/RO/PASS FERRY

FUEL OIL SYSTEM DIAGRAM

SCALE		SIZE	DRG No.	REV	SHEET
N.T.S.	DIMS IN INCHES UNLESS OTHERWISE STATED	D	575-02-261	A	2 OF 2

SSI FILE No. s:\active\projnumb\575-02\575-02-261.dwg

REVISIONS

REV.	DATE	DESCRIPTION	SHEET	ZONE	AUTH^{D}
A	1/20/06	REVISED TO SUIT 24 VDC AND 120/240 VAC SYSTEM ONE LINES	2&3	–	JAH
B	–	–			
C	–	–			
D	–	–			

STATE OF MAINE
JOHN A. HUNTER
NO. 10737
REGISTERED PROFESSIONAL ENGINEER
10-3-05

NO.	REFERENCES
3	SPECIFICATION
2	575–02–321 ONE LINE DIAGRAM OF 24 VDC SYSTEM
1	575–02–320, ONE LINE DIAGRAM OF AC SYSTEM

APPROVALS:	SUBMIT DATE	APPROVED BY	APPROVED DATE	RE–SUBMIT DATE	APPROVED BY	APPROVED DATE
OWNER	–	–	–	–	–	–
USCG	–	–	–	–	–	–
ABS	–	–	–	–	–	–
USPHS	–	–	–	–	–	–

ITEM	PART CODE	DESCRIPTION	MATERIAL	QTY
5	–	–	–	–
4	–	–	–	–
3	–	–	–	–
2	–	–	–	–
1	–	–	–	–

BILL OF MATERIALS

Seaworthy Systems, Inc.
MARINE ENGINEERS NAVAL ARCHITECTS
P.O. BOX 965
ESSEX, CT 06426
USA
TEL: 860–767–9061
FAX: 860–767–1263

FOR
MAINE STATE FERRY SERVICE
P.O. BOX 645, 517A MAIN STREET
ROCKLAND, ME 04841–0645

CHECKED BY	AUTH^{D} BY	SCALE
JAH 01–26–06	JAH 09–30–05	NTS
DRAWN BY	ORIG^{L} DATE	
LAG	09–30–05	DIMS IN INCHES UNLESS OTHERWISE STATED

TITLE 154' RO/RO/PASS FERRY

120/240 VAC SYSTEM
ELECTRICAL LOAD ANALYSIS

SIZE	DRG No.	REV.	SHEET
D	575–02–301	A	1 OF 4

SSI FILE No. s:\active\projnumb\575–02\575–02–301.dwg

120/240 VAC SYSTEM
Electrical Load Analysis

SERVICE	CIRCUIT POWER						IN SERVICE NIGHT WINTER		IN SERVICE NIGHT SUMMER		EMERGENCY WINTER NIGHT		SHORE POWER WINTER		VOLTAGE DROP				
	Circuit No.	CB Size	Unit FLA	Qty	Connected Load Circuit FLA	Connected Load kW	Demand Factor	kW LOAD	Demand Factor	kW LOAD	Demand Factor	kW LOAD	Demand Factor	kW LOAD	DISTANCE FEET	WIRE SIZE, CM2	WIRE SIZE, AWG	VOLTS	%
MAIN GENSET		**300**	**277**		**277**										40	336000	2X3/0	0.98	0.39%
MAIN 240 V SWITCHBOARD																			
No. 1 ENGINE RM. SUPPLY FAN	P201	30.0	15.2	1	15.2	3.7	0.3	1.12	0.8	2.98	0.0	0.00	0.0	0.00	40	10400	10	1.74	0.73%
No. 2 ENGINE RM. SUPPLY FAN	P202	30.0	15.2	1	15.2	3.7	0.3	1.12	0.8	2.98	0.0	0.00	0.0	0.00	40	10400	10	1.74	0.73%
No. 1 ACCOMODATION SUPPLY FAN	P203	15.0	3.6	1	3.6	0.8	0.9	0.72	0.9	0.72	0.0	0.00	0.0	0.00	75	6530	12	1.23	0.51%
No. 2 ACCOMODATION SUPPLY FAN	P204	15.0	3.6	1	3.6	0.8	0.9	0.72	0.9	0.72	0.0	0.00	0.0	0.00	75	6530	12	1.23	0.51%
FIRE AND BILGE PUMP	P205	100.0	54.0	1	54.0	12.5	1.0	12.50	1.0	12.50	0.0	0.00	0.0	0.00	40	41700	4	1.54	0.64%
No. 1 X-BAND RADAR	P206	15.0	1.7	1	1.7	0.3	1.0	0.30	1.0	0.30	0.0	0.00	0.0	0.00	75	6530	12	0.58	0.24%
No. 2 STEERING GEAR HPU	P 207	200 inst	15.2	1	15.2	3.7	0.5	1.85	0.5	1.85	0.0	0.00	0.0	0.00	75	10400	10	3.27	1.36%
P208, 240 V DISTRIBUTION PANEL	P208	150.0	133.2	1	133.2	**36.3**		18.28		3.39		0.00		5.48	20	133000	2/0	0.60	0.25%
240/120 TRANSFORMERS	P214	150.0	127.3	1	127.3	**47.6**		14.80		11.48		0.00		7.15	40	212000	4/0	0.72	0.30%
EMERGENCY SWBD BUS TIE		300.0	225.0		198.0	**74.7**		6.95		6.35		21.65		5.18	75	250000	250	1.77	0.74%
SPARE		50			25	8.3	0	0.00	0	0.00	0	0.00	0	0.00					
SPARE		15.0			7.5	2.5	0.0	0.00	0.0	0.00	0.0	0.00	0.0	0.00					
CONNECTED LOAD						**194.9**		**58.4**		**43.3**		**21.6**		**17.8**					
MAIN 120V SWITCHBOARD																			
FEEDER FROM TRANSFORMER		**225.0**			**229.2**										40	300000		0.91	0.76%
DC 2 RECTIFIER NORMAL SUPPLY	P101	15.0	8.0	1	8.0	0.8		0.36		0.36		0.36		0.49	75	10400	10	1.71	1.43%
DC 1 RECTIFIER NORMAL SUPPLY	P102	20.0	13.3	1	13.3	1.4		0.48		0.48		0.53		0.23	75	10400	10	2.86	2.38%
P104, 120V DISTRIBUTION PANEL	P104	60.0	32.7	1	32.7	6.8		2.02		1.23		0.00		0.72	30	26300	6	1.11	0.93%
P105, 120 V DISTRIBUTION PANEL	P106	60.0	80.4	1	80.4	16.7		4.94		2.51		0.00		0.76	75	41700	4	4.31	3.59%
LP1, 120 V LIGHTING PANEL	P106	40.0	32.7	1	32.7	6.8		4.05		4.05		0.00		2.82	40	26300	6	1.48	1.23%
LP2, 120 V LIGHTING PANEL	P107	20.0	19.4	1	19.4	4.0		1.75		1.75		0.00		0.96	75	10400	10	4.16	3.47%
DC 3 RECTIFIER NORMAL SUPPLY	P108	20.0	12.7	1	12.7	2.5		0.61		0.61		0.54		0.69	30	10400	10	0.79	0.66%
DC 4 RECTIFIER NORMAL SUPPLY	P109	20.0	12.7	1	12.7	1.3		0.39		0.39		0.33		0.20	30	10400	10	0.79	0.66%
GENSET STRIP HEATERS	P109	15.0	4.1	2	8.2	1.0	0.2	0.20	0.1	0.10	0.0	0.00	0.3	0.30	30	6530	12	0.81	0.67%
SPARE	P110	15.0			10.0	6.3	0.0	0.00	0.0	0.00	0.0	0.00	0.0	0.00					
CONNECTED LOAD					230.1	**47.6**		**14.8**		**11.5**		**0.0**		**7.2**					
DEMAND LOAD					**229.2**														
KVA					**47.6**														
P208, 240 V DISTRIBUTION PANEL																			
FEEDER		**150.0**			**133.2**										20	133000	2/0	0.60	0.25%
HOT WATER HEATING BOILER	P208-1	20.0	12.5	1	12.5	3.4	0.8	2.72	0.0	0.00	0.0	0.00	0.9	3.06	40	10400	10	1.43	0.60%
AIR COMPRESSOR No. 1	P208-2	30.0	15.2	1	15.2	3.7	1.0	3.70	0.1	0.37	0.0	0.00	0.0	0.00	50	10400	10	2.18	0.91%
DOMESTIC HOT WATER HEATER	P208-3	20.0	12.5	1	12.5	3.0	0.5	1.50	0.2	0.60	0.0	0.00	0.1	0.30	40	10400	10	1.43	0.60%
SANITARY WATER PUMP	P208-4	15.0	5.2	1	5.2	1.1	1.0	1.10	0.3	0.33	0.0	0.00	0.1	0.11	50	6530	12	1.19	0.49%
POTABLE WATER PUMP	P208-5	15.0	5.2	1	5.2	1.1	1.0	1.10	0.3	0.33	0.0	0.00	0.1	0.11	50	6530	12	1.19	0.49%
AMR 2 EXHAUST FAN	P208-6	15.0	5.2	1	5.2	1.1	0.0	0.00	0.8	0.88	0.0	0.00	0.1	0.11	50	6530	12	1.19	0.49%
AMR 1 EXHAUST FAN	P208-7	15.0	5.2	1	5.2	1.1	0.0	0.00	0.8	0.88	0.0	0.00	0.1	0.11	40	6530	12	0.95	0.40%
UNIT HEATER, BOW THRUSTER COMPT.	P208-8	15.0	12.3	1	12.3	5.1	0.8	4.08	0.0	0.00	0.0	0.00	0.1	0.51	75	6530	12	4.21	1.75%
UNIT HEATER, STEERING GEAR RM.	P208-9	15.0	12.3	1	12.3	5.10	0.8	4.08	0.0	0.00	0.0	0.00	0.1	0.51	75	6530	12	4.21	1.75%
WASTE OIL PUMP	P208-10	15.0	9.6	1	9.6	2.2	0.0	0.00	0.0	0.00	0.0	0.00	0.1	0.22	40	6530	12	1.75	0.73%
COOLANT TRANSFER PUMP	P208-11	15.0	9.6	1	9.6	2.2	0.0	0.00	0.0	0.00	0.0	0.00	0.1	0.22	40	6530	12	1.75	0.73%
OILY WATER PUMP	P208-12	15.0	9.6	1	9.6	2.2	0.0	0.00	0.0	0.00	0.0	0.00	0.1	0.22	40	6530	12	1.75	0.73%
SPARE		15.0	7.5	1.0	7.5	2.5	0.0	0.00	0.0	0.00	0.0	0.00	0.0	0.00					
SPARE		15.0	7.5	1.0	7.5	2.5	0.0	0.00	0.0	0.00	0.0	0.00	0.0	0.00					
P 208 CONNECTED LOAD					129.4	**36.3**		**18.3**		**3.4**		**0.0**		**5.5**					
P208 PANEL DEMAND LOAD					**133.2**														
P104 120 V DIST. PANEL																			
FEEDER		**50.0**			**32.7**										30	26300	6	1.11	0.46%
UNIT HEATER FAN, AMR 2, ER	P104-1	15.0	2.0	2	4.0	0.2	0.5	0.10	0.5	0.10	0.0	0.00	0.5	0.10	40	6530	12	0.53	0.4%
UNIT HEATER FAN, ER, AMR 2	P104-2	15.0	2.0	2	4.0	0.2	0.5	0.10	0.5	0.10	0.0	0.00	0.5	0.10	40	6530	12	0.53	0.4%
WORKSHOP TOOL GRINDER	P104-3	15.0	4.0	1	4.0	0.4	0.0	0.00	0.0	0.00	0.0	0.00	0.5	0.19	40	6530	12	0.53	0.4%
UNIT HEATER, WHEELHOUSE (3P)	P104-4	20.0	6.0	1	6.0	2.0	0.8	1.60	0.0	0.00	0.0	0.00	0.1	0.20	75	10400	10	0.93	0.8%
No. 1 SHAFT LOG DRAINAGE PUMP	P104-5	15.0	7.2	1	7.2	0.8	0.1	0.08	0.1	0.08	0.0	0.00	0.1	0.08	40	6530	12	0.95	0.8%
No. 2 SHAFT LOG DRAINAGE PUMP	P104-6	15.0	7.2	1	7.2	0.3	0.1	0.03	0.1	0.03	0.0	0.00	0.1	0.03	40	6530	12	0.95	0.8%
LIFT STATION	P104-7	15.0	4.9	1	4.9	0.3	0.0	0.00	0.0	0.00	0.0	0.00	0.0	0.00	40	6530	12	0.65	0.5%
WATER COOLER	P104-8	15.0	3.5	1	3.5	0.3	0.2	0.05	0.3	0.08	0.0	0.00	0.1	0.03	40	6530	12	0.46	0.4%
COMPRESSED AIR DRYER	P104-9	15.0	4.0	1	4.0	0.3	0.2	0.06	0.4	0.12	0.0	0.00	0.0	0.00	40	6530	12	0.53	0.4%
MCE AIR CONDITIONER	P104-10	15.0	8.0	1	8.0	0.9	0.0	0.00	0.8	0.72	0.0	0.00	0.0	0.00	40	6530	12	1.05	0.9%
SPARE		15.0				0.6	0.0	0.00	0.0	0.00	0.0	0.00	0.0	0.00					
SPARE		15.0				0.6	0.0	0.00	0.0	0.00	0.0	0.00	0.0	0.00					
P104 CONNECTED LOAD						**6.8**		**2.0**		**1.2**		**0.0**		**0.7**					
P104 PANEL DEMAND LOAD					**32.7**														

120/240 VAC SYSTEM
Electrical Load Analysis

SERVICE	CIRCUIT POWER						IN SERVICE NIGHT WINTER		IN SERVICE NIGHT SUMMER		EMERGENCY WINTER NIGHT		SHORE POWER WINTER						
	Circuit				Connected Load		Demand	kW	Demand	kW	Demand	kW	Demand	kW	VOLTAGE DROP				
	No.	CB Size	Unit FLA	Qty	Circuit FLA	kW	Factor	LOAD	Factor	LOAD	Factor	LOAD	Factor	LOAD	DISTANCE FEET	WIRE SIZE, CM2	WIRE SIZE, AWG	VOLTS	%
LP1 120 V LIGHTING PANEL																			
FEEDER		**50.0**			**32.7**										75	26300	6	2.78	1.16%
LIGHTING CIRCUIT	LP 1-1	15.0	0.3	9	3.0	0.4	1.0	0.36	1.0	0.36	0.0	0.00	0.5	0.18	50	6530	12	0.49	0.4%
FLOODLIGHTS	LP 1-2	15.0	4.2	2	8.4	1.0	1.0	1.01	1.0	1.01	0.0	0.00	0.5	0.50	50	6530	12	1.38	1.2%
FLOODLIGHTS	LP 1-3	15.0	4.2	2	8.4	1.0	1.0	1.01	1.0	1.01	0.0	0.00	0.5	0.50	75	6530	12	2.07	1.7%
LIGHTING CIRCUIT	LP 1-4	15.0	0.3	11	3.6	0.4	1.0	0.44	1.0	0.44	0.0	0.00	0.5	0.22	75	6530	12	0.90	0.7%
LIGHTING CIRCUIT	LP 1-5	15.0	0.3	12	4.0	0.5	1.0	0.48	1.0	0.48	0.0	0.00	0.5	0.24	75	6530	12	0.98	0.8%
LIGHTING CIRCUIT	LP 1-6	15.0	0.3	15	5.0	0.6	1.0	0.59	1.0	0.59	0.0	0.00	0.5	0.30	75	6530	12	1.22	1.0%
RESCUE BOAT FLOODLIGHT	LP 1-7	15.0	4.2	1	4.2	0.5	0.1	0.05	0.1	0.05	0.0	0.00	0.5	0.25	50	6530	12	0.69	0.6%
RECEPTACLES	LP 1-8	15.0	0.4	7	2.9	0.4	0.1	0.04	0.1	0.04	0.0	0.00	0.5	0.18	75	6530	12	0.73	0.6%
RECEPTACLES	LP 1-9	15.0	0.4	9	3.8	0.5	0.1	0.05	0.1	0.05	0.0	0.00	0.5	0.23	75	6530	12	0.93	0.8%
RECEPTACLES	LP 1-10	15.0	0.4	9	3.8	0.5	0.1	0.05	0.1	0.05	0.0	0.00	0.5	0.23	75	6530	12	0.93	0.8%
SPARE		15.0	0.6	1	0.6	0.6	0.0	0.00	0.0	0.00	0.0	0.00	0.0	0.00					
SPARE		15.0	0.6	1	0.6	0.6	0.0	0.00	0.0	0.00	0.0	0.00	0.0	0.00					
LP 1 CONNECTED LOAD						**6.8**		**4.1**		**4.1**		**0.0**		**2.8**					
LP1 PANEL DEMAND LOAD					**32.7**														
P105 120 V DISTRIBUTION PANEL																			
FEEDER		**100.0**			**80.4**										75	83700	2	2.15	0.89%
CREW'S LOUNGE MICROWAVE OVEN	P105-1	15.0	7.0	1	7.0	0.8	0.1	0.08	0.1	0.08	0.0	0.00	0.1	0.08	75	6530	12	1.73	1.4%
CREW'S LOUNGE COFFEE MAKER	P105-2	15.0	8.3	1	8.3	1.0	0.4	0.40	0.4	0.40	0.0	0.00	0.1	0.10	40	6530	12	1.09	0.9%
CREW'S LOUNGE REFRIGERATOR	P105-3	15.0	6.0	1	6.0	0.7	0.1	0.07	0.3	0.22	0.0	0.00	0.1	0.07	75	6530	12	1.48	1.2%
PORT WATER CLOSET HAND DRYER	P105-4	20.0	20.0	1	20.0	2.4	0.2	0.48	0.2	0.48	0.0	0.00	0.1	0.24	30	10400	10	1.24	1.0%
CREW'S WATER CLOSET HAND DRYER	P105-5	20.0	20.0	1	20.0	2.4	0.1	0.24	0.1	0.24	0.0	0.00	0.1	0.24	75	10400	10	3.10	2.6%
ADA WATER CLOSET HAND DRYER	P105-6	20.0	20.0	1	20.0	2.4	0.2	0.48	0.2	0.48	0.0	0.00	0.0	0.00	75	10400	10	3.10	2.6%
WATER CLOSET EXHAUST FANS (2)	P105-7	15.0	0.4	2	0.8	0.1	0.2	0.02	0.2	0.02	0.0	0.00	0.1	0.01	50	6530	12	0.14	0.1%
WATER CLOSET EXHAUST FANS (2)	P105-8	15.0	0.4	2	0.8	0.1	0.2	0.02	0.2	0.02	0.0	0.00	0.1	0.01	50	6530	12	0.14	0.1%
HEATED WINDOWS (2)	P 105-9	15.0	4.2	2	8.4	1.0	0.8	0.81	0.0	0.00	0.0	0.00	0.0	0.00	30	6530	12	0.83	0.69%
HEATED WINDOWS (2)	P 105-10	15.0	4.2	2	8.4	1.0	0.8	0.81	0.0	0.00	0.0	0.00	0.0	0.00	30	6530	12	0.83	0.69%
PIPE HEAT TRACE TAPE	P105-11	15.0	10.0	1.0	10.0	1.2	0.8	0.96	0.0	0.00	0.0	0.00	0.0	0.00	30	6530	12	0.99	0.8%
PILOTHOUSE COFFEE MAKER	P105-12	15.0	9.5	1.0	9.5	1.1	0.5	0.57	0.5	0.57	0.0	0.00	0.0	0.00	30	6530	12	0.94	0.8%
SPARE		15.0				1.2	0.0	0.00	0.0	0.00	0.0	0.00	0.0	0.00					
SPARE		15.0				1.2	0.0	0.00	0.0	0.00	0.0	0.00	0.0	0.00					
P 105 CONEECTED LOAD						**16.7**		**4.9**		**2.5**		**0.0**		**0.8**					
P105 PANEL DEMAND LOAD					**80.4**														
LP 2 120 V LIGHTING DIST. PANEL																			
FEEDER		**50.0**			**19.4**										30	26300	6	0.66	0.27%
LIGHTING CIRCUIT	LP 2-1	15.0	0.3	10	3.3	0.4	1.0	0.40	1.0	0.40	0.0	0.00	0.5	0.20	75	6530	12	0.81	0.7%
LIGHTING CIRCUIT	LP 2-2	15.0	0.3	10	3.3	0.4	1.0	0.40	1.0	0.40	0.0	0.00	0.5	0.20	75	6530	12	0.81	0.7%
LIGHTING CIRCUIT	LP 2-3	15.0	0.3	7	2.3	0.3	1.0	0.28	1.0	0.28	0.0	0.00	0.5	0.14	75	6530	12	0.57	0.5%
LIGHTING CIRCUIT	LP 2-4	15.0	0.3	13	4.3	0.5	1.0	0.51	1.0	0.51	0.0	0.00	0.5	0.26	75	6530	12	1.06	0.9%
LIGHTING CIRCUIT	LP 2-5	15.0	0.4	14	5.6	0.7	0.1	0.07	0.1	0.07	0.0	0.00	0.1	0.07	75	6530	12	1.38	1.2%
RECEPTACLES	LP 2-6	15.0	0.4	8	3.2	0.4	0.1	0.04	0.1	0.04	0.0	0.00	0.1	0.04	75	6530	12	0.79	0.7%
RECEPTACLES	LP 2-7	15.0	0.4	4	1.6	0.2	0.1	0.02	0.1	0.02	0.0	0.00	0.1	0.02	75	6530	12	0.40	0.3%
RECEPTACLES	LP 2-8	15.0	0.4	8	3.2	0.4	0.1	0.04	0.1	0.04	0.0	0.00	0.1	0.04	75	6530	12	0.79	0.7%
SPARE		15.0			0.0	0.4	0.0	0.00	0.0	0.00	0.0	0.00	0.0	0.00					
SPARE		15.0			0.0	0.4	0.0	0.00	0.0	0.00	0.0	0.00	0.0	0.00					
LP2 CONNECTED LOAD						**4.0**		**1.7**		**1.7**		**0.0**		**1.0**					
LP2 PANEL DEMAND LOAD					**19.4**														
EP2 EMER. 240V SWBD																			
EMERGENCY GENSET		**300.0**			**198.0**										20	300000	300	0.39	0.16%
BUS TIE FEEDER		**300.0**			**198.0**										75	300000	300	1.47	0.61%
No. 1 STEERING GEAR HPU	EP 203	200 inst	15.2	1	15.2	3.7	0.0	0.00	0.0	0.00	0.7	2.59	0.0	0.00	75	10400	10	3.27	1.36%
EMERGENCY FIRE PUMP	EP 204	100.0	54.0	1	54.0	12.5	0.0	0.00	0.0	0.00	0.8	10.00	0.0	0.00	75	41700	4	2.89	1.21%
BILGE PUMP	EP 205	30.0	15.2	1	15.2	3.7	0.0	0.00	0.0	0.00	0.0	0.00	0.1	0.37	75	10400	10	3.27	1.36%
No. 2 X-BAND RADAR	EP 206	15.0	1.7	1	1.7	0.3	1.0	0.30	1.0	0.30	0.7	0.21	0.0	0.00	40	6530	12	0.31	0.13%
SPRINKLER PUMP	EP 207	50.0	42.0	1	42.0	11.2	0.0	0.00	0.0	0.00	0.0	0.00	0.0	0.00	75	26300	6	3.57	1.49%
No. 2 AIR COMPRESSOR	EP 208	30.0	15.2	1	15.2	3.7	0.0	0.00	0.0	0.00	0.0	0.00	0.1	0.37	75	10400	10	3.27	1.36%
WATERTIGHT DOOR PANEL EP209	EP209	60.0	31.2	1	31.2	6.6		0.00		0.00		0.66		0.00	75	10400	10	6.70	2.79%
ELEVATOR	EP210	30.0	15.2	1	15.2	3.7	0.1	0.37	0.1	0.37	0.2	0.74	0.1	0.37	75	10400	10	3.27	1.36%
240/120 LIGHTING TRANSFORMERS	EP 201	75.0	0.0	1	0.0	21.7		6.28		5.68		7.45		4.07	40	41700	4	0.00	0.00%
RESCUE BOAT HPU	EP 211	30.0	15.2	1	15.2	4.0	0.0	0.00	0.0	0.00	0.0	0.00	0.0	0.00	75	10400	10	3.27	1.36%
SPARE		15.0	7.5	1	7.5	1.8	0.0	0.00	0.0	0.00	0.0	0.00	0.0	0.00					
SPARE		15.0	7.5	1	7.5	1.8	0.0	0.00	0.0	0.00	0.0	0.00	0.0	0.00					
EMER. 240 VSWBD CONN. LOAD						**74.7**		**6.9**		**6.3**		**21.6**		**5.2**					

120/240 VAC SYSTEM
Electrical Load Analysis

SERVICE	CIRCUIT POWER						IN SERVICE NIGHT WINTER		IN SERVICE NIGHT SUMMER		EMERGENCY WINTER NIGHT		SHORE POWER WINTER						
	Circuit				Connected Load		Demand	kW	Demand	kW	Demand	kW	Demand	kW	VOLTAGE DROP				
	No.	CB Size	Unit FLA	Qty	Circuit FLA	kW	Factor	LOAD	Factor	LOAD	Factor	LOAD	Factor	LOAD	DISTANCE FEET	WIRE SIZE, CM2	WIRE SIZE, AWG	VOLTS	%
WATERTIGHT DOOR PANEL EP209																			
FEEDER		**50.0**			**32.5**										75	26300	6	2.76	1.15%
WTD HPU No. 1	EP 209-1	15.0	5.2	1	5.2	1.1	0.0	0.00	0.0	0.00	0.1	0.11	0.0	0.00	75	10400	10	1.12	0.47%
WTD HPU No. 2	EP 209-2	15.0	5.2	1	5.2	1.1	0.0	0.00	0.0	0.00	0.1	0.11	0.0	0.00	50	10400	10	0.74	0.31%
WTD HPU No. 3	EP 209-3	15.0	5.2	1	5.2	1.1	0.0	0.00	0.0	0.00	0.1	0.11	0.0	0.00	50	10400	10	0.74	0.31%
WTD HPU No. 4	EP 209-4	15.0	5.2	1	5.2	1.1	0.0	0.00	0.0	0.00	0.1	0.11	0.0	0.00	50	10400	10	0.74	0.31%
WTD HPU No. 5	EP 209-5	15.0	5.2	1	5.2	1.1	0.0	0.00	0.0	0.00	0.1	0.11	0.0	0.00	50	10400	10	0.74	0.31%
WTD HPU No. 6	EP 209-6	15.0	5.2	1	5.2	1.1	0.0	0.00	0.0	0.00	0.1	0.11	0.0	0.00	75	10400	10	1.12	0.47%
EP209 CONNECTED LOAD						**6.6**		**0.0**		**0.0**		**0.7**		**0.0**					
EP209 DEMAND LOAD					**32.5**														
EMERGENCY 120V SWITCHBOARD																			
FEEDER FROM XFORMER		**100.0**			**0.0**										20	83700	1	0.00	0.00%
DC2 120VAC/24 VDC POWER SUPPLY	EP 101	30.0	8.0	1	8.0	0.8		0.43		0.43		0.42		0.27	75	10400	10	1.23	1.03%
DC1 120VAC/24 VDC POWER SUPPLY	EP 102	20.0	11.4	1	11.4	1.4		0.56		0.56		0.62		0.62	75	10400	10	1.77	1.47%
NAVIGATION LIGHT Panel	EP 103	15.0	1.7	1	1.7	0.2	0.5	0.10	0.5	0.10	0.0	0.00	0.1	0.02	75	6530	12	0.41	0.34%
EMERG PANEL EP104	EP104	40.0	44.8	1	44.8	9.3		1.47		1.05		1.31	0.1	0.72	75	16500	8	4.38	3.65%
EMERG LIGHTING PNL EL1	EP 106	40.0	26.8	1	26.8	5.6		2.60		2.60		4.13	0.1	1.44	75	16500	8	2.62	2.19%
DC3 120VAC/24 VDC POWER SUPPLY	EP107	20.0	12.7	1	12.7	1.3		0.46		0.46		0.38	0.1	0.56	75	10400	12	1.97	1.64%
DC4 120VAC/24 VDC POWER SUPPLY	EP108	20.0	12.7	1	12.7	1.3		0.46		0.46		0.38	0.1	0.23	75	10400	12	1.97	1.64%
EMERGENCY GENSET STRIP HEATER	EP105	15.0	4.1	2	8.2	1.0	0.2	0.20	0.1	0.02	0.2	0.20	0.2	0.20	20	6530	12	0.54	0.45%
SPARE		15.0	7.5	1	7.5	0.9	0.0	0.00		0.00	0.0	0.00	0.0	0.00					
EMER. 120 V SWBD CONN. LOAD						**21.7**		**6.3**		**5.7**		**7.4**		**4.1**					
EP104, 120 V DISTRIBUTION PANEL																			
FEEDER		**50.0**			**44.8**										50	26300	6	2.54	2.11%
RESERVED	EP 104-1	15.0	1.6	1	1.6	0.2	0.2	0.04	0.0	0.00	0.8	0.15	0.0	0.00	30	6530	12	0.16	0.13%
FLOODLIGHTS, PORT	EP 104-2	15.0	0.8	2	1.6	0.2	0.2	0.04	0.2	0.04	0.3	0.06	0.0	0.00	75	6530	12	0.40	0.33%
FLOODLIGHTS, STBD	EP 104-3	15.0	0.8	2	1.6	0.2	0.2	0.04	0.2	0.04	0.3	0.06	0.0	0.00	75	6530	12	0.40	0.33%
SEARCHLIGHT, PORT	EP 104-4	15.0	8.4	1	8.4	1.0	0.0	0.00	0.0	0.00	0.1	0.10	0.0	0.00	30	6530	12	0.83	0.69%
SEARCHLIGHT, STBD	EP 104-5	15.0	8.4	1	8.4	1.0	0.0	0.00	0.0	0.00	0.1	0.10	0.0	0.00	30	6530	12	0.83	0.69%
AIR HORN CONTROL AND HEAT	EP 104-6	15.0	7.0	1	7.0	0.8	0.2	0.17	0.1	0.08	0.1	0.08	0.0	0.00	20	6530	12	0.46	0.38%
WINDOW WIPERS	EP 104-7	15.0	0.8	6	5.0	0.6	0.2	0.12	0.2	0.12	0.1	0.06	0.0	0.00	20	6530	12	0.33	0.27%
CELLPHONE CHARGER	EP 104-8	15.0	0.8	1	0.8	0.1	0.1	0.01	0.1	0.01	0.1	0.01	0.1	0.01	20	6530	12	0.05	0.04%
CCTV MONITOR	EP 104-9	15.0	0.8	2	1.6	0.2	0.9	0.17	0.9	0.17	0.5	0.10	0.1	0.02	20	6530	12	0.11	0.09%
FIRE DETECTION AND ALARM SYSTEM	EP 104-10	15.0	3.0	1	3.0	0.4	0.9	0.32	0.9	0.32	0.9	0.32	0.9	0.32	20	6530	12	0.20	0.16%
EDG STARTING BATTERY CHARGER	EP 104-11	15.0	10.0	1	10.0	0.7	0.1	0.07	0.1	0.07	0.1	0.07	0.1	0.07	30	6530	12	0.99	0.82%
SPARE	EP104-12	15.0				0.4	0.0	0.00	0.0	0.00	0.0	0.00	0.0	0.00					
GENERAL ALARM BELLS	EP104-13	15.0	0.4	12	5.0	0.6	0.0	0.00	0.0	0.00	0.8	0.48	0.0	0.00	75	6530	12	1.24	1.04%
GENSET STARTING BATTERY CHARGER	EP 104-14	15.0	10.0	1	10.0	0.7	0.1	0.07	0.1	0.07	0.8	0.56	0.1	0.07	75	6530	12	2.47	2.06%
SHUTDOWN SYSTEMS	EP 104-15	15.0	0.8	1	0.8	0.1	0.0	0.00	0.0	0.00	0.1	0.01	0.0	0.00	75	6530	12	0.20	0.16%
E.R. RECEPTACLES	EP 104-16	15.0	0.4	4	1.7	0.2	0.1	0.02	0.1	0.02	0.1	0.02	0.1	0.02	75	6530	12	0.41	0.35%
EDG BLOCK HEATER	EP104-17	15.0	8.0	1	8.0	1.0	0.4	0.40	0.1	0.10	0.0	0.00	0.1	0.10	50	6530	12	1.32	1.10%
SPARE		15.0				0.5	0.0	0.00	0.0	0.00	0.0	0.00	0.0	0.00					
SPARE		15.0				0.5	0.0	0.00	0.0	0.00	0.0	0.00	0.0	0.00					
EP 104 CONNECTED LOAD						**9.3**		**1.5**		**1.0**		**1.1**		**0.6**					
EP104 PANEL DEMAND LOAD					**44.8**														
EL1 120 V LIGHTING PANEL																			
FEEDER		**50.0**			**26.8**										75	26300	6	2.28	1.90%
LIGHTING CIRCUIT	EL1-1	15.0	0.3	7	2.3	0.3	1.0	0.28	1.0	0.28	1.0	0.28	0.5	0.14	75	6530	12	0.57	0.48%
LIGHTING CIRCUIT	EL1-2	15.0	0.3	6	2.0	0.2	1.0	0.24	1.0	0.24	1.0	0.24	0.5	0.12	75	6530	12	0.49	0.41%
LIGHTING CIRCUIT	EL1-3	15.0	0.3	11	3.6	0.4	1.0	0.44	1.0	0.44	1.0	0.44	0.5	0.22	75	6530	12	0.90	0.75%
LIGHTING CIRCUIT	EL1-4	15.0	0.3	9	3.0	0.4	1.0	0.36	1.0	0.36	1.0	0.36	0.5	0.18	75	6530	12	0.73	0.61%
LIGHTING CIRCUIT	EL1-5	15.0	0.3	9	3.0	0.4	1.0	0.36	1.0	0.36	1.0	0.36	0.5	0.18	75	6530	12	0.73	0.61%
LIGHTING CIRCUIT	EL1-6	15.0	0.3	10	3.3	0.4	1.0	0.40	1.0	0.40	1.0	0.40	0.5	0.20	75	6530	12	0.81	0.68%
LIGHTING CIRCUIT	EL1-7	15.0	0.3	10	3.3	0.4	1.0	0.40	1.0	0.40	1.0	0.40	0.5	0.20	75	6530	12	0.81	0.68%
FLOODLIGHTS	EL1-8	15.0	4.3	2	8.6	1.0	0.0	0.00	0.0	0.00	1.0	1.03	0.0	0.00	75	6530	12	2.12	1.77%
02 DK EXTERIOR PATH AND STEP LIGHTS	EL 1-9	15.0	0.07	17	1.19	0.1	1.0	0.14	1.0	0.14	1.0	0.14	0.0	0.00	75	6530	12	0.29	0.24%
RESCUE BOAT FLOODLIGHT	EL1-10	15.0	4.2	1	4.2	0.5	0.0	0.00	0.0	0.00	1.0	0.50	0.0	0.00	75	6530	12	1.04	0.9%
SPARE		15.0	6.0	1	6.0	0.7	0.0	0.00	0.0	0.00	0.0	0.00	0.0	0.00					
SPARE		15.0	6.0	1	6.0	0.7	0.0	0.00	0.0	0.00	0.0	0.00	0.0	0.00					
EL 1 CONNECTED LOAD					46.5	**5.6**		**2.6**		**2.6**		**4.1**		**1.2**					
EL1 PANEL DEMAND LOAD					**26.8**														

REVISIONS

REV.	DATE	DESCRIPTION	SHEET	ZONE	AUTH^{D}
A	1/20/06	REVISED LOADS PER CHANGES TO AC AND DC SYSTEM ELECTRICAL ONE-LINE	2&3	–	JAH
B	–	–			
C	–	–			
D	–	–			

STATE OF MAINE
JOHN A. HUNTER
NO. 10737
REGISTERED PROFESSIONAL ENGINEER
10-3-05

NO.	REFERENCES
3	SPECIFICATION
2	575-02-321 ONE LINE DIAGRAM OF 24 VDC SYSTEM
1	575-02-320, ONE LINE DIAGRAM OF AC SYSTEM

APPROVALS:	SUBMIT DATE	APPROVED BY	APPROVED DATE	RE-SUBMIT DATE	APPROVED BY	APPROVED DATE
OWNER	–	–	–	–	–	–
USCG	–	–	–	–	–	–
ABS	–	–	–	–	–	–
USPHS	–	–	–	–	–	–

ITEM	PART CODE	DESCRIPTION	MATERIAL	QTY
5	–	–	–	–
4	–	–	–	–
3	–	–	–	–
2	–	–	–	–
1	–	–	–	–

BILL OF MATERIALS

Seaworthy Systems, Inc.
MARINE ENGINEERS NAVAL ARCHITECTS
P.O. BOX 965
ESSEX, CT 06426
USA
TEL: 860-767-9061
FAX: 860-767-1263

FOR
MAINE STATE FERRY SERVICE
P.O. BOX 645, 517A MAIN STREET
ROCKLAND, ME 04841-0645

CHECKED BY	AUTH^{D} BY	SCALE
JAH 01-26-06	JAH 09-30-05	NTS
DRAWN BY	ORIG^{L} DATE	
LAG	09-30-05	DIMS IN INCHES UNLESS OTHERWISE STATED

TITLE 154' RO/RO/PASS FERRY

24 VDC SYSTEM
ELECTRICAL LOAD ANALYSIS

SIZE	DRG No.	REV.	SHEET
D	575-02-302	A	1 OF 3

SSI FILE No. z:\active\projnumb\575-02\575-02-302.dwg

120/240 VAC SYSTEM
Electrical Load Analysis

SERVICE	CIRCUIT POWER						IN SERVICE NIGHT WINTER		IN SERVICE NIGHT SUMMER		EMERGENCY WINTER NIGHT		SHORE POWER WINTER						
	Circuit				Connected Load		Demand	kW	Demand	kW	Demand	kW	Demand	kW	VOLTAGE DROP				
	No.	CB Size	Unit FLA	Qty	Circuit FLA	kW	Factor	LOAD	Factor	LOAD	Factor	LOAD	Factor	LOAD	DISTANCE FEET	WIRE SIZE, CM2	WIRE SIZE, AWG	VOLTS	%
NAVIGATION 24 VDC DIST PANEL DC1																			
FEEDER					**56.6**										30	106000	1/0	0.34	1.4%
CHART PLOTTER	DC1-1	15.0	8.3	1	8.3	0.20	0.5	0.10	0.5	0.10	0.5	0.10	0.0	0.00	75	6530	12	2.05	8.5%
AUTOPILOT	DC1-2	15.0	2.1	1	2.1	0.05	0.7	0.04	0.7	0.04	0.7	0.04	0.0	0.00	75	6530	12	0.52	2.2%
GYRO COMPASS	DC1-3	15.0	4.2	1	4.2	0.10	0.7	0.07	0.7	0.07	0.7	0.07	1.0	0.10	75	6530	12	1.04	4.3%
MAGNETIC COMPASS LIGHT	DC1-4	15.0	1.0	1	1.0	0.02	0.1	0.00	0.1	0.00	0.1	0.00	0.0	0.00	75	6530	12	0.25	1.0%
DGPS	DC1-5	15.0	2.1	1	2.1	0.05	0.7	0.04	0.7	0.04	0.7	0.04	0.0	0.00	75	6530	12	0.52	2.2%
NAVIGATION ECHOSOUNDER	DC1-6	15.0	1.0	1	1.0	0.02	0.7	0.02	0.7	0.02	0.7	0.02	0.0	0.00	75	6530	12	0.25	1.0%
No. 1 VHF	DC1-7	15.0	1.5	1	1.5	0.04	0.7	0.03	0.7	0.03	0.0	0.00	0.1	0.00	75	6530	12	0.37	1.5%
No. 2 VHF	DC1-8	15.0	1.5	1	1.5	0.04	0.0	0.00	0.0	0.00	0.2	0.01	0.1	0.00	75	6530	12	0.37	1.5%
WIND SPEED AND DIRECTION INDICATOR	DC1-9	15.0	1.0	1	1.0	0.02	0.7	0.02	0.7	0.02	0.7	0.02	0.0	0.00	75	6530	12	0.25	1.0%
BAROMETER	DC1-10	15.0	0.8	1	0.8	0.02	0.7	0.01	0.7	0.01	0.7	0.01	0.0	0.00	75	6530	12	0.20	0.8%
CLOCK	DC1-11	15.0	4.2	1	4.2	0.10	0.7	0.07	0.7	0.07	0.7	0.07	0.7	0.07	75	6530	12	1.04	4.3%
PA SYSTEM	DC1-12	15.0	12.5	1	12.5	0.30	0.3	0.09	0.3	0.09	0.2	0.06	0.1	0.03	75	6530	12	3.09	12.9%
NAVIGATION LIGHTS INVERTER	DC1-13	15.0	8.3	1	8.3	0.20	0.0	0.00	0.0	0.00	0.5	0.10	0.1	0.02	75	6530	12	2.05	8.5%
SPARE		15.0		1	4.0	0.1	0.0	0.00	0.0	0.00	0.0	0.00	0.0	0.00					
SPARE		15.0		1	4.0	0.1	0.0	0.00	0.0	0.00	0.0	0.00	0.0	0.00					
DC1 CONNECTED LOAD					**48.5**	**1.36**		**0.5**		**0.5**		**0.5**		**0.2**					
DC 1 PANEL DEMAND LOAD					**56.6**		**19.8**		**19.8**		**22.0**		**9.5**						
BATTERY RATING, AMP-HRS (30 minute)							**9.9**		**9.9**		**11.0**		**4.8**						
BATTERY CHARGER RATING							**20.8**		**20.8**		**23.1**		**10.0**						

INTERIOR COMM. 24 VDC DIST. PANEL DC2																			
FEEDER		**50.0**			**33.8**										75	41700	4	1.31	5.5%
SP TELEPHONE SYSTEM	DC2-1	15.0	2.0	1	2.0	0.05	0.3	0.01	0.3	0.01	0.2	0.01	0.7	0.03	75	6530	12	0.49	2.1%
RUDDER ANGLE INDICATORS	DC2-2	15.0	4.2	1	4.2	0.10	0.8	0.08	0.8	0.08	0.8	0.08	0.7	0.07	75	6530	12	1.04	4.3%
MACHINERY SPACE ALARM SYSTEM	DC2-3	15.0	4.2	1	4.2	0.10	0.8	0.08	0.8	0.08	0.8	0.08	0.7	0.07	75	6530	12	1.04	4.3%
PROPULSION AND CONTROL SYSTEM	DC2-4	15.0	4.2	1	4.2	0.10	0.5	0.05	0.5	0.05	0.7	0.07	0.7	0.07	75	6530	12	1.04	4.3%
BILGE LEVEL ALARM SYSTEM	DC2-5	15.0	4.2	1	4.2	0.10	0.1	0.01	0.1	0.01	0.0	0.00	0.7	0.07	75	6530	12	1.04	4.3%
FIRE SAFETY SHUTDOWN SYSTEM	DC2-6	15.0	4.2	1	4.2	0.10	0.1	0.01	0.1	0.01	0.0	0.00	0.7	0.07	75	6530	12	1.04	4.3%
CCTV CAMERAS	DC2-7	15.0	6.0	1	6.0	0.14	0.8	0.12	0.8	0.12	0.8	0.12	0.7	0.10	75	6530	12	1.48	6.2%
SPARE					0.0	0.1	0.0	0.00	0.0	0.00	0.0	0.00	0.0	0.00					
SPARE					0.0	0.1	0.0	0.00	0.0	0.00	0.0	0.00	0.0	0.00					
DC 2 CONNECTED LOAD					**29.0**	**0.8**		**0.4**		**0.4**		**0.4**		**0.5**					
DC 2 PANEL DEMAND LOAD					**33.8**		**15.1**		**15.1**		**14.9**		**20.3**						
BATTERY RATING, AMP-HRS (30 minute)							**7.5**		**7.5**		**7.4**		**10.2**						
BATTERY CHARGER RATING							**15.8**		**15.8**		**15.6**		**21.3**						

DC1& DC2 BATT. AND CHARGER RATING.					
DC1& DC2 CONNECTED LOAD.	**34.9**	**34.9**	**36.8**	**29.8**	
BATTERY RATING, AMP-HRS (30 MINUTE)	**17.4**	**17.4**	**18.4**	**14.9**	
BATTERY CHARGER RATING	**36.6**	**36.6**	**38.7**	**31.3**	

120/240 VAC SYSTEM
Electrical Load Analysis

SERVICE	CIRCUIT POWER						IN SERVICE NIGHT WINTER		IN SERVICE NIGHT SUMMER		EMERGENCY WINTER NIGHT		SHORE POWER WINTER						
	Circuit				Connected Load		Demand	kW	Demand	kW	Demand	kW	Demand	kW	VOLTAGE DROP				
	No.	CB Size	Unit FLA	Qty	Circuit FLA	kW	Factor	LOAD	Factor	LOAD	Factor	LOAD	Factor	LOAD	DISTANCE FEET	WIRE SIZE, CM2	WIRE SIZE, AWG	VOLTS	%
MACHINERY SPACE 24 VDC DIST. PANEL DC3																			
FEEDER		**50.0**			**54.0**										20	26300	6	0.88	3.7%
PORT ENGINE ECM	DC3-1	15.0	10.0	1	10.0	0.24	0.9	0.22	0.9	0.22	0.9	0.22	0.5	0.12	20	6530	12	0.66	2.7%
PORT ENGINE DISPLAYS	DC3-2	15.0	2.0	1	2.0	0.05	0.9	0.04	0.9	0.04	0.9	0.04	0.5	0.02	20	6530	12	0.13	0.5%
PORT ENGINE STARTING	DC3-3	20.0	20.0	1	20.0	0.48	0.1	0.05	0.1	0.05	0.0	0.00	0.5	0.24	30	10400	10	1.24	5.2%
PORT ENGINE CUST. COMM. MODULE	DC3-4	15.0	2.0	1	2.0	0.05	0.9	0.04	0.9	0.04	0.9	0.04	0.5	0.02	20	6530	12	0.13	0.5%
PORT ENGINE RELAY DRIVER MODULE	DC3-5	15.0	2.0	1	2.0	0.05	0.9	0.04	0.9	0.04	0.5	0.02	0.5	0.02	20	6530	12	0.13	0.5%
PORT ENGINE SAFETY SHUTDOWN	DC3-6	15.0	4.0	1	4.0	0.10	0.0	0.00	0.0	0.00	0.0	0.00	0.5	0.05	20	6530	12	0.26	1.1%
PROPULSION CONTROL	DC3-7	15.0	10.0	1	10.0	0.2	0.0	0.00	0.0	0.00	0.0	0.00	0.0	0.00	20	6530	12	0.66	2.7%
SPARE			4.0	1	4.0	0.1	0.0	0.00	0.0	0.00	0.0	0.00	0.0	0.00					
DC 3 CONNECTED LOAD					**50.0**	**1.3**		**0.4**		**0.4**		**0.3**		**0.5**					
DC 3 PANEL DEMAND LOAD					**54.0**		**16.4**		**16.4**		**13.6**		**20.0**						
BATTERY RATING, AMP-HRS (30 minute)							**8.2**		**8.2**										
BATTERY CHARGER RATING							**17.2**		**17.2**										
MACHINERY SPACE 24 VDC DIST. PANEL DC4																			
FEEDER		**50.0**			**54.0**										20	26300	6	0.88	3.7%
STBD ENGINE ECM	DC4-1	15.0	10.0	1	10.0	0.24	0.9	0.22	0.9	0.22	0.9	0.22	0.7	0.17	20	6530	12	0.66	2.7%
STBD ENGINE DISPLAYS	DC4-2	15.0	2.0	1	2.0	0.05	0.9	0.04	0.9	0.04	0.9	0.04	0.2	0.01	20	6530	12	0.13	0.5%
STBD ENGINE STARTING	DC4-3	20.0	20.0	1	20.0	0.48	0.1	0.05	0.1	0.05	0.0	0.00	0.0	0.00	30	10400	10	1.24	5.2%
STBD ENGINE CUST. COMM. MODULE	DC4-4	15.0	2.0	1	2.0	0.05	0.9	0.04	0.9	0.04	0.9	0.04	0.2	0.01	20	6530	12	0.13	0.5%
STBD ENGINE RELAY DRIVER MODULE	DC4-5	15.0	2.0	1	2.0	0.05	0.9	0.04	0.9	0.04	0.5	0.02	0.2	0.01	20	6530	12	0.13	0.5%
STBD ENGINE SAFETY SHUTDOWN	DC4-6	15.0	4.0	1	4.0	0.10	0.0	0.00	0.0	0.00	0.0	0.00	0.0	0.00	20	6530	12	0.26	1.1%
PROPULSION CONTROL	DC4-7	15.0	10.0	1	10.0	0.2	0.0	0.00	0.0	0.00	0.0	0.00	0.0	0.00	20	6530	12	0.66	2.7%
SPARE		15.0	4.0	1	4.0	0.1	0.0	0.00	0.0	0.00	0.0	0.00	0.0	0.00					
DC 3 CONNECTED LOAD					**50.0**	**1.3**		**0.4**		**0.4**		**0.3**		**0.2**					
DC 3 PANEL DEMAND LOAD					**54.0**		**16.4**		**16.4**		**13.6**		**8.2**						
BATTERY RATING, AMP-HRS (30 minute)							**8.2**		**8.2**		**6.8**		**4.1**						
BATTERY CHARGER RATING							**17.2**		**17.2**		**14.3**		**8.6**						
MACHINERY SPACE 24 VDC DIST. PANEL DC5																			
FEEDER		**50.0**			**52.0**										20	26300	6	0.85	3.5%
BOW TRUSTER ENGINE ECM	DC5-1	15.0	10.0	1	10.0	0.24	0.4	0.10	0.4	0.10	0.9	0.22	0.7	0.17	20	6530	12	0.66	2.7%
BOW THRUSTER ENGINE DISPLAYS	DC5-2	15.0	2.0	1	2.0	0.05	0.4	0.02	0.4	0.02	0.0	0.00	0.1	0.00	20	6530	12	0.13	0.5%
BOW THRUSTER ENGINE STARTING	DC5-3	20.0	20.0	1	20.0	0.48	0.1	0.05	0.1	0.05	0.0	0.00	0.0	0.00	30	10400	10	1.24	5.2%
BOWTHRUSTER ENGINE CUST. COMM. MODULE	DC5-4	15.0	2.0	1	2.0	0.05	0.4	0.02	0.4	0.02	0.0	0.00	0.1	0.00	20	6530	12	0.13	0.5%
BOW THRUSTER ENGINE RELAY DRIVER MODULE	DC5-5	15.0	2.0	1	2.0	0.05	0.4	0.02	0.4	0.02	0.0	0.00	0.1	0.00	20	6530	12	0.13	0.5%
PORT ENGINE SAFETY SHUTDOWN	DC5-6	15.0	4.0	1	4.0	0.10	0.0	0.00	0.0	0.00	0.0	0.00	0.1	0.01	20	6530	12	0.26	1.1%
BOW THRUSTER HYD. CONTROLS 1	DC5-7	15.0	4.0	1	4.0	0.1	0.1	0.01	0.1	0.01	0.0	0.00	0.1	0.01	75	6530	12	0.99	4.1%
BOW THRUSTER HYD. CONTROLS 2	DC5-8	15.0	4.0	1	4.0	0.1	0.1	0.01	0.1	0.01	0.0	0.00	0.1	0.01	75	6530	12	0.99	4.1%
SPARE		15.0	4.0	1	4.0	0.1	0.0	0.00	0.0	0.00	0.0	0.00	0.0	0.00					
DC 5 CONNECTED LOAD					**40.0**	**1.2**		**0.2**		**0.2**		**0.2**		**0.2**					
DC 5 PANEL DEMAND LOAD					**52.0**		**9.2**		**9.2**		**9.0**		**8.8**						
BATTERY RATING, AMP-HRS (30 minute)							**4.6**		**4.6**		**4.5**		**4.4**						
BATTERY CHARGER RATING							**9.7**		**9.7**		**9.5**		**9.2**						
DC3, DC4 & DC5 BATT. AND CHARGER RATING.																			
DC3, DC4 & DC5 CONNECTED LOAD.							**42.0**		**42.0**		**36.2**		**37.0**						
BATTERY RATING, AMP-HRS (30 MINUTE)							**21.0**		**21.0**		**11.3**		**8.5**						
BATTERY CHARGER RATING							**44.1**		**44.1**		**23.7**		**17.9**						

575-02-305

SYMBOL LEGEND

SYMBOL	DESCRIPTION	ITEM NO.
	LIGHT SWITCH, 2-WAY	12
3-WAY	LIGHT SWITCH, 3-WAY	13 OR 14
	120 V, 20A DUPLEX RECEPTACLE	1 or 11
	OVHD INT. RECESSED MOUNT 2X20 FLOR. LT.	10
	OVERHD EXTERIOR SURF. MTG 2X20 FLOR. 120 VAC	6
	BULKHEAD SURF. MT PENDANT LT. W/120 VAC COMP. FLOR, 13 W BULB	15
	500W HALOGEN FLOODLIGHT	8
	PATH/STEP LIGHT	4
	EMERG. OVERHD EXTERIOR SURF. MTG 3X20 FLOR. 2X20-120 VAC AND 1X20 WITH 90 MINUTE BATTERY SUPPLY	2
E	EMERG. OVERHD INTERIOR FLUSH. MTG 3X20 FLOR. 2X20-120 VAC AND 1X20 WITH 90 MINUTE BATTERY SUPPLY	3
R	RECESSED OR SURFACE 120 VAC, 60 W INCANDESCENT FIXTURE W/ RED LENS	7
EXIT	LIGHTED EMERGENCY EXIT SIGN. OVERHD INTERIOR FLUSH. MTG 2X8W FLOR. WITH 90 MINUTE BATTERY SUPPLY	5
EX	OVERHEAD SURF. MT PENDANT LT. W/120 VAC COMP. FLOR, 13W BULB	16
	EXTERIOR LIGHT SWITCH, 2-WAY	17
	OVERHEAD SURF. MT PENDANT LT. W/120 VAC COMP. FLOR, 13W BULB	18

DO NOT SCALE, IF IN DOUBT ASK

REVISIONS

REV.	DATE	DESCRIPTION	SHEET	ZONE	AUTH.
A	1/20/06	RELOCATED LIGHTS TO MATCH NEW PORT PASS. WC	4	D-29	JAH
B	–	–			
C	–	–			
D	–	–			

GENERAL NOTES:

1. ALL MATERIALS, WORKMANSHIP AND INSTALLATION TO MEET THE REQUIREMENTS OF CFR 46 SUBCHAPTER H AND BE TO THE SATISFACTION OF THE USCG OCMI.

2. INTEGRAL BATTERY POWERED LIGHTS SHALL BE ILLUMINATED FOR A MINIMUM OF 90 MINUTES UPON LOSS OF NORMAL POWER.

3. THE MINIMUM WIRE SIZE OF ANY LIGHTING CIRCUIT SHALL BE 4110 CM (14 AWG).

4. ALL CABLES SHALL HAVE MINIMUM 75 C RATING AND WILL BE OF THE LOW SMOKE TYPE.

5. CIRCUIT BREAKERS SHALL NOT HAVE LOADS IN EXCESS OF 80% OF THEIR RATING.

6. CABLES SHALL BE RUN SINGLE BANKED AND SECURED IN WIREWAYS WITH METAL STRAPS AT INTERVALS NOT EXCEEDING 24".

7. CIRCUIT BREAKERS SHALL BE RATED FOR SWITCHING SERVICE AND HAVE AN AIC OF 10 KV.

8. FLUORESCENT LIGHTS SHALL BE RATED FOR MARINE SERVICE AND MEET THE APPLICABLE UL LISTING.

9. LOCATIONS OF LIGHTS ARE REPRESENTATIVE. FLOODLIGHTS TO BE INSTALLED SO AS TO BE EASILY SERVICED AND AIMED.

STATE OF MAINE
JOHN A. HUNTER
NO. 10737
REGISTERED PROFESSIONAL ENGINEER
10-3-05

BILL OF MATERIALS

ITEM	MODEL	MANUFACTURER	DESCRIPTION	MATERIAL	QTY
18	717B	PAULUHN	EXTERIOR OVERHD SURF. MOUNT PEND. LT. W/13W FLOR.		1
17	862B	PAULUHN	EXTERIOR SURF. MOUNT ROTARY SWITCH		3
16	EPC	PAULUHN	EXTERIOR EXP. PROOF PENDENT LT FIXTURE W/13 W COMPACT FLOR. BULB		1
15	729B	PAULUHN	EXTERIOR PENDENT LIGHT FIXTURE W/13 W COMPACT FLOR. BULB		13
14	2735A	PAULUHN	3-WAY LIGHT SWITCH, SURF MOUNT BOX, INTERIOR W/DIMMER		TBD
13	2735A	PAULUHN	3-WAY LIGHT SWITCH, SURF MOUNT BOX, INTERIOR		TBD
12	2723A	PAULUHN	2-POLE LIGHT SWITCH, SURF MOUNT BOX, INTERIOR		TBD
11	2705A-125	PAULUHN	15 A, 120 VAC DUPLEX RECEPTACLE, SURF MOUNT BOX		TBD
10	M100R	L.C. DOANE	2X 20 INT. FLUSH MT. FLOR. LT.		38
9	–	CARLISLE & FINCH	1000 W, PEDESTAL MOUNT, LEVER CONT.		2
8	QS1605	PAULUHN	HALOGEN FLOODLIGHT, 500 W, 120 V, STAINLESS STEEL		11
7	DLF26DIMRV	PAULUHN	RECESSED MOUNT OVERHD LIGHT, RED LENSE, DIMMABLE		4
6	M3	L.C. DOANE	2 X 20 EXT. SURF. MT. FLOR. LT.		42
5	F1703-EM	PAULUHN	LIGHTED EXIT SIGN, W/90 MIN. BATTERY		6
4	M421C	L.C. DOANE	EXT 8 W FLOR. PATH LIGHT		15
3	M100R-E1	L.C. DOANE	2X 20 INT. FLUSH MT. FLOR. LT. WITH 90 MIN BATT.		19
2	M3-E1	L.C. DOANE	2X 20 EXT FLOR. SURF. MT. LT. WITH 90 MIN BATT.		33
1	2584B-125	PAULUHN	15 A, 120 VAC DUPLEX RECEPTACLE, SURF MOUNT BOX, INTERIOR		TBD

NO.	REFERENCES
3	–
2	–
1	575-02-320 AC SYSTEM ONE LINE DIAGRAM

APPROVALS:	SUBMIT DATE	APPROVED BY	APPROVED DATE	RE-SUBMIT DATE	APPROVED BY	APPROVED DATE
OWNER	–	–	–	–	–	–
USCG	–	–	–	–	–	–
ABS	–	–	–	–	–	–
USPHS	–	–	–	–	–	–

Seaworthy Systems, Inc.
MARINE ENGINEERS NAVAL ARCHITECTS
P.O. BOX 965
ESSEX, CT 06426
USA
TEL: 860-767-9061
FAX: 860-767-1263

FOR
MAINE STATE FERRY SERVICE
P.O. BOX 645, 517A MAIN STREET
ROCKLAND, ME 04841-0645

CHECKED BY	AUTH. BY	SCALE
JAH 01-26-06	JAH 09-30-05	NTS
DRAWN BY	ORIG. DATE	
JEK	09-20-05	DIMS IN INCHES UNLESS OTHERWISE STATED

TITLE 154' RO/RO/PASS FERRY

LIGHTING PLAN

SIZE	DRG No.	REV.	SHEET
D	575-02-305	A	1 OF 5

SSI FILE No. s:\active\projnumb\575-02\575-02-305.dwg

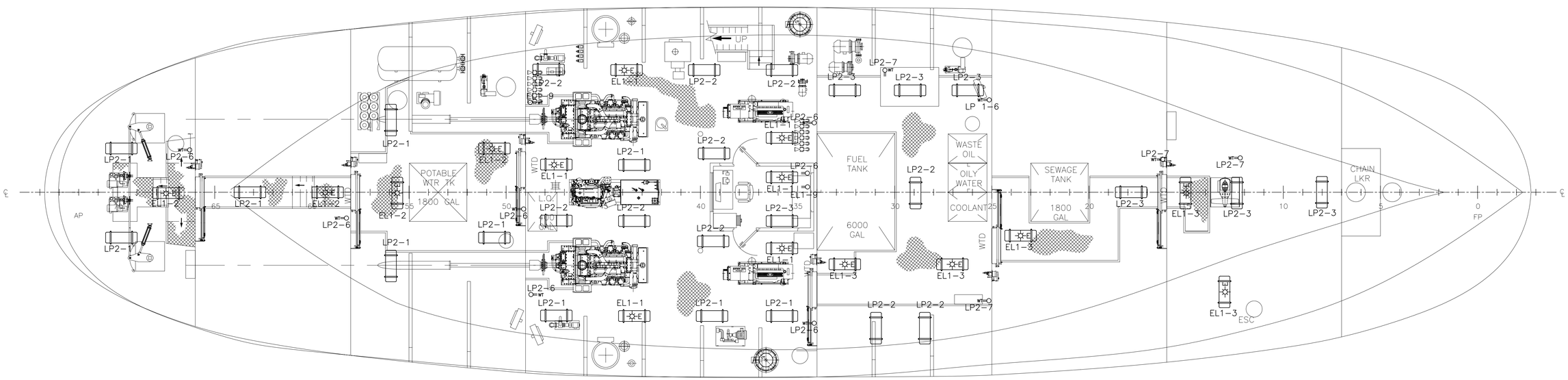

PLAN VIEW BELOW MAIN DECK

N.T.S.

$\frac{3}{16}$" = 1'-0"

Seaworthy Systems, Inc.
MARINE ENGINEERS NAVAL ARCHITECTS
P.O. BOX 965
ESSEX, CT 06426
USA
TEL: 860-767-9061
FAX: 860-767-1263

FOR
MAINE STATE FERRY SERVICE
P.O. BOX 645, 517A MAIN STREET
ROCKLAND, ME 04841-0645

TITLE 154' RO/RO/PASS FERRY

LIGHTING PLAN

SCALE NTS

DIMS IN INCHES UNLESS OTHERWISE STATED

SIZE	DRG No.	REV	SHEET
D	575-02-305	A	2 OF 5

SSI FILE No. s:\active\projnumb\575-02\575-02-305.dwg

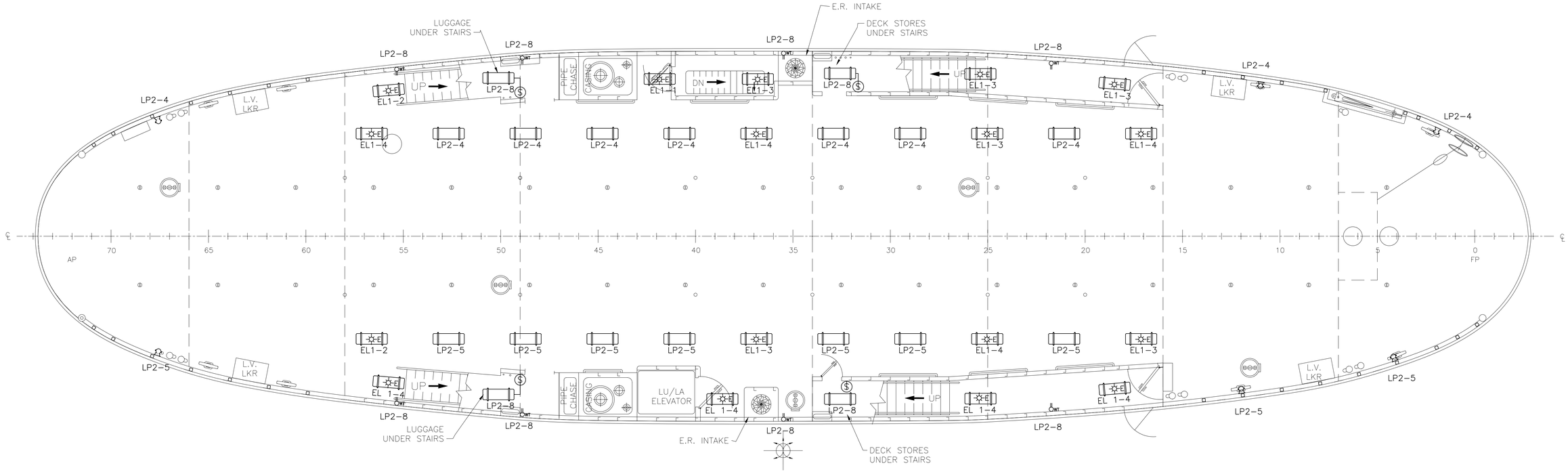

PLAN VIEW, MAIN DECK

15'-7" ABOVE BASELINE

N.T.S.

Seaworthy Systems, Inc.

MARINE ENGINEERS NAVAL ARCHITECTS

P.O. BOX 965
ESSEX, CT 06426
USA
TEL: 860-767-9061
FAX: 860-767-1263

FOR

MAINE STATE FERRY SERVICE
P.O. BOX 645, 517A MAIN STREET
ROCKLAND, ME 04841-0645

TITLE 154' RO/RO/PASS FERRY

LIGHTING PLAN

SCALE	DIMS IN INCHES UNLESS OTHERWISE STATED	SIZE	DRG No.	REV	SHEET
NTS		D	575-02-305	A	3 OF 5

SSI FILE No. s:\active\projnumb\575-02\575-02-305.dwg

$\frac{3}{16}$" = 1'-0"

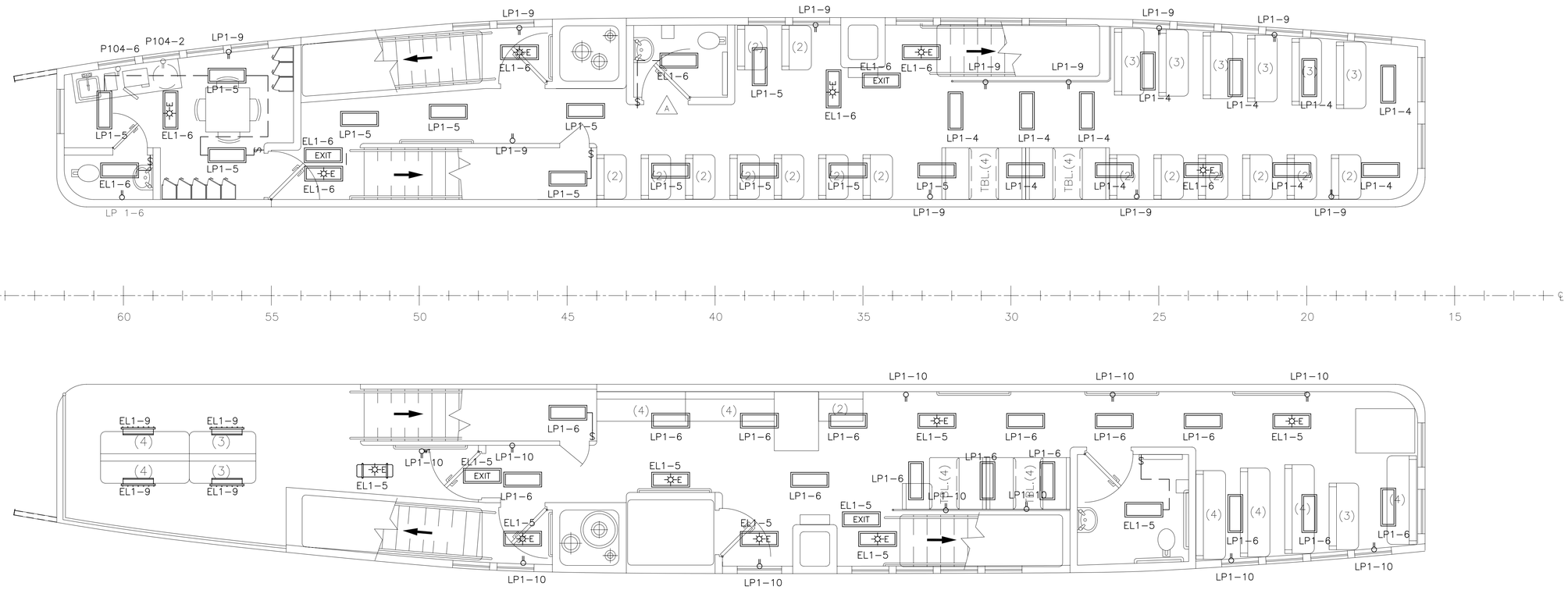

PLAN VIEW 01 DECK

N.T.S.

1/4"=1'-0"

Seaworthy Systems, Inc.
MARINE ENGINEERS NAVAL ARCHITECTS
P.O. BOX 965
ESSEX, CT 06426
USA
TEL: 860-767-9061
FAX: 860-767-1263

FOR
MAINE STATE FERRY SERVICE
P.O. BOX 645, 517A MAIN STREET
ROCKLAND, ME 04841-0645

TITLE 154' RO/RO/PASS FERRY
LIGHTING PLAN

SCALE	DIMS IN INCHES UNLESS OTHERWISE STATED	SIZE	DRG No.	REV	SHEET
NTS		D	575-02-305	A	4 OF 5

SSI FILE No. s:\active\projnumb\575-02\575-02-305.dwg

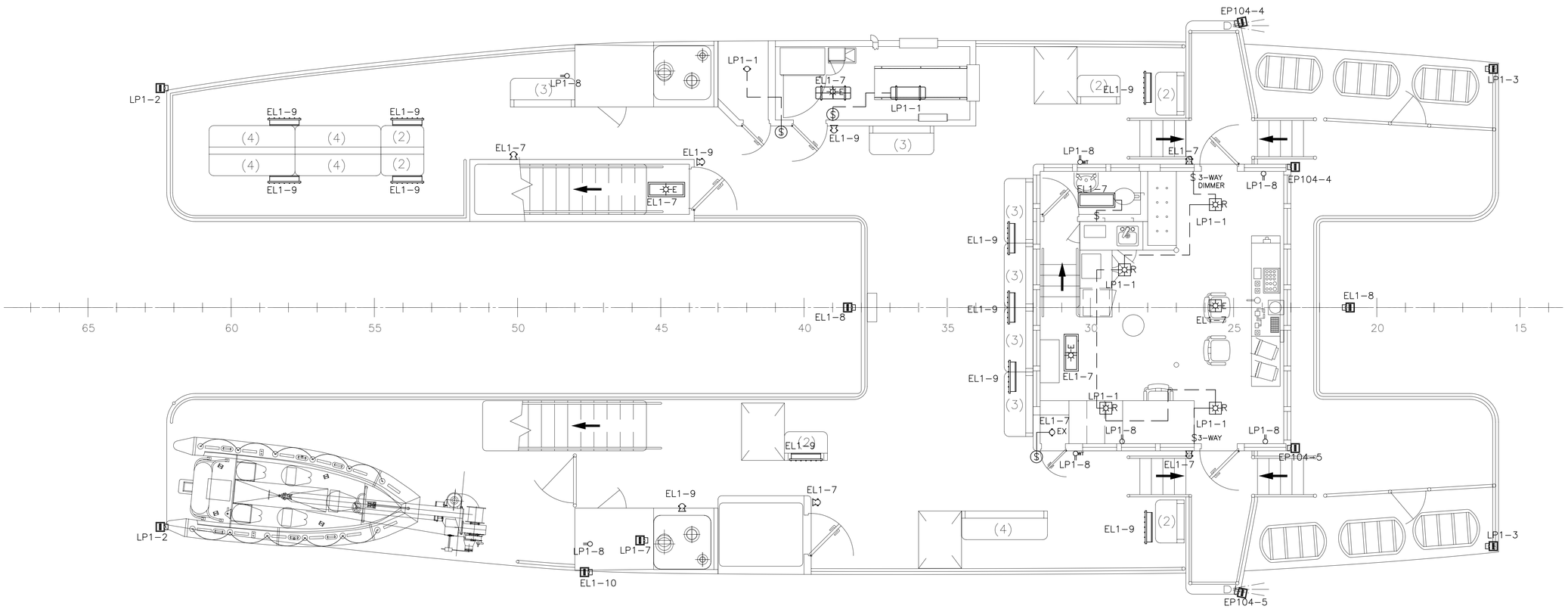

PLAN VIEW 02 DECK

N.T.S.

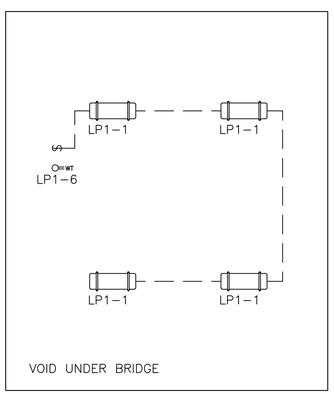

VOID UNDER BRIDGE

SCALE: 1/4 IN = 1 FT

$\frac{1}{4}$"=1'-0"

Seaworthy Systems, Inc.
P.O. BOX 965
ESSEX, CT 06426
USA
TEL: 860-767-9061
FAX: 860-767-1263
MARINE ENGINEERS NAVAL ARCHITECTS

FOR

MAINE STATE FERRY SERVICE
P.O. BOX 645, 517A MAIN STREET
ROCKLAND, ME 04841-0645

TITLE 154' RO/RO/PASS FERRY

LIGHTING PLAN

SCALE	DIMS IN INCHES UNLESS OTHERWISE STATED	SIZE	DRG No.	REV.	SHEET
NTS		D	575-02-305	A	5 OF 5

SSI FILE No. s:\active\projnumb\575-02\575-02-305.dwg

CALCULATIONS:

MAXIMUM ASSYMETRICAL SHORT CIRCUIT CURRENT = 4XGENSET FLA + 4XNORMALLY RUNNING MOTORS FLA.

MAXIMUM SHORT CIRCUIT AMPERAGE (2 GENSETS IN PARALLEL + 2 E.R. VENT FANS, 2 FIRE PUMPS AND 1 SPRINKLER PUMP)= 6742 AMPERES

AVERAGE ASSYMETRICAL SHORT CIRCUIT CURRENT = 3.5XGENSET FLA +3.5XNORMALLY RUNNING MOTORS

AVERAGE ASSYMETRICAL SHORT CIRCUIT CURRENT (2 GENSETS IN PARALLEL + 2 E.R. VENT FANS, 2 FIRE PUMPS AND 1 SPRINKLER PUMP)=5751 AMPERES

PANEL DEMAND LOADS AND FEEDER SIZES:
GENSET FEEDER SIZE
FEEDER SIZE = AMPACITY OF 1.15 X GENSET FLA
GENSET FLA = 298 AMPERES
1.15 X 298= 343 AMPERES
CABLE SELECTED IS 2 X 212 MCM

EMERGENCY BUS TIE FEEDER SIZE
FEEDER SIZE = AMPACITY OF 1.15 X EDG FLA
EDG FLA = 198 AMPERES
1.15 X 198 = 230 AMPERES
CABLE SELECTED IS 300 MCM

POWER PANEL DEMAND LOADS (3 PHASE LOADS) = 1.25 X LARGEST MOTOR FLA + SUM OF REMAINING AMP LOADS + SPARE CIRCUIT BREAKER LOADS.
SPARE CIRCUIT BREAKER LOADS = 50% OF THE SPARE CB TRIP RATING.

PANEL P208 DEMAND LOAD = 131 AMPERES
FEEDER CABLE SELECTED IS 133 MCM
PANEL EP209 DEMAND LOAD = 32 AMPERES
FEEDER CABLE SELECTED IS 26.3 MCM

LIGHTING PANEL DEMAND LOADS (1 PHASE LOADS) = (SUM OF LOADS + SPARE CIRCUIT BREAKER LOADS)/VOLTAGE/1.73
SPARE CIRCUIT BREAKER LOADS = SUM OF LOADS/NUMBER OF ACTIVE CIRCUITS.
PANEL LP1 DEMAND LOAD = 33 AMPERES
FEEDER CABLE SELECTED IS 26.3 MCM
PANEL LP2 DEMAND LOAD = 18.0 AMPERES
FEEDER CABLE SELECTED IS 16.5 MCM
PANEL EL1 DEMAND LOAD = 27 AMPERES
FEEDER CABLE SELECTED IS 26.3 MCM

POWER PANEL DEMAND LOADS (1 PHASE LOADS) = (1.25 X LARGEST MOTOR FLA + SUM OF REMAINING AMP LOADS + SPARE CIRCUIT BREAKER LOADS)/VOLTAGE/1.73.
SPARE CIRCUIT BREAKER LOADS = SUM OF LOADS/NUMBER OF ACTIVE CIRCUITS.

PANEL P104 PANEL DEMAND LOAD = 41 AMPERES
FEEDER CABLE SELECTED IS 26.3 MCM
PANEL P105 PANEL DEMAND LOAD = 80 AMPERES
FEEDER CABLE SELECTED IS 66.4 MCM
PANEL EP104 PANEL DEMAND LOAD = 38 AMPERES
FEEDER CABLE SELECTED IS 41.7 MCM

TRANSFORMER FEEDER = 1.25 X RATED CURRENT
MAIN TRANSFORMER CURRENT (30 KVA) = 73 AMPERES
1.25 X 73 = 91
FEEDER CABLE SELECTED IS 66.4 MCM
EMERGENCY TRANSFORMER CURRENT = 73 AMPERES
FEEDER CABLE SELECTED IS 66.4 MCM

GENERAL NOTES:
1. ALL EQUIPMENT SHALL MEET THE REQUIREMENTS OF ABS RULES FOR STEEL VESSELS LESS THAN 295 FT AND CFR 46 SUBCHAPTER H.

2. THE INSTALLATION OF ALL EQUIPMENT SHALL MEET THE REQUIREMENTS OF ABS RULES FOR STEEL VESSELS LASS THAN 295 FT, CFR 46 SUBCHAPTER H AND BE TO THE SATISFACTION OF THE OCMI.

3. THE CABLE SIZES SELECTED ARE FOR 50 C AMBIENT AND 75 C CABLE, SINGLE BANKED.

4. ALL CABLES SHALL BE PROPERLY SUPPORTED THROUGHOUT THEIR LENGTH WITH METAL STRAPS AT NO MORE THAN 24" SPACING.

5. ALL EQUIPMENT SHALL BE PROPERLY INTERFACED WITH EMERGENCY CONTROLS AND SYSTEMS AS REQUIRED BY ABS AND USCG.

6. THE MAIN GENERATORS SHALL BE CAPABLE OF PARALLEL OPERATION.

7. ALL PUMPS SHALL HAVE LOCAL OPERATOR STATIONS WITH "LOCK OUT" TYPE STOP PUSHBUTTONS.

8. THE STEERING GEAR CIRCUIT BREAKER SHALL HAVE ONLY AN INSTANTANEOUS TRIP RATING EQUAL TO 2X THE LOCKED ROTOR CURRENT OF THE STEERING GEAR MOTOR + 100% OF THE CURRENT DRAW OF ANY CONTROLS.

9. THE STEERING GEAR, FIRE PUMP AND SPRINKLER PUMP CONTROLLERS SHALL BE OF THE LVR TYPE.

10. SINGLE PHASE LOADS BETWEEN PHASES SHALL BE BALANCED WITHIN 15%.

11. CABLE PENETRATIONS THROUGH WATERTIGHT AND FIRE BOUNDARIES SHALL NOT COMPROMISE THE WATERTIGHT AND FIRE INTEGRITY OF THE BOUNDARY.

12. CIRCUIT BREAKERS SHALL BE HELD IN WITH SCREWS, HAVE AN AIC OF 10kV AND BE RATED FOR SWITCHING SERVICE.

13. ELECTRICAL DISTRIBUTION PANELS SHALL BE OF DRIPROOF CONSTRUCTION AND OF THE PROPER AMP RATING FOR THE PANEL DEMAND LOAD.

14. SUFFICIENT CLEARANCE IN FRONT OF ELECTRICAL DISTRIBUTION PANELS AND CONTROLLERS TO PERMIT FULL OPENING OF THE FRONT DOOR.

15. ALL ELECTRICAL DISTRIBUTION PANELS AND CONTROLLERS SHALL HAVE ELEMENTARY CIRCUIT DIAGRAMS ATTACHED INSIDE THE PANEL DOOR.

16. THE MINIMUM WIRE SIZE FOR LIGHTING CIRCUITS SHALL BE 4.1 MCM (14 AWG). THE MINIMUM WIRE SIZE FOR POWER CIRCUITS SHALL BE 6.5 MCM (12 AWG).

17. ALL ELECTRICAL DISRIBUTION PANELS AND CONTROLLERS SHAL BE PROPERLY GROUNDED TO THE VESSEL'S HULL.

18. DIELECTRIC MATS SHALL BE FURNISHED IN FRONT OF EACH SWITCHBOARD.

SYMBOLS LIST

G1	DIESEL GENERATOR SET	M	MOTOR
	AC EMERG./NORM. AUTO TRANS. RLY		VENTILATION FAN
	BATTERY CHARGER	C	CONTROLLER
	24 VDC BATTERY BANK		3 PH. TRANSFORMER
	DC EMERG/NORM. AUTO TRANS. SW.		SEARCH LIGHT
	CIRCUIT BREAKER		FLOOD LIGHT
	HAND DRYER		MICROWAVE
	COFFEE MAKER		CLOSED CIRCUIT TV MONITOR
	AIR HORN	WP	WINDOW WIPERS
	REFRIGERATOR		

STATE OF MAINE JOHN A. HUNTER NO. 10737 REGISTERED PROFESSIONAL ENGINEER 10-3-05

REVISIONS

REV.	DATE	DESCRIPTION	SHEET	ZONE	AUTH^D
A	–	–			
B	–	–			
C	–	–			
D	–	–			

ITEM	MODEL	MANUFACTURER	DESCRIPTION	MATERIAL	QTY
78	729B	PAULUHN	WATERTIGHT BULKHEAD MOUNT PENDANT LIGHT		8
77	862B	PAULUHN	WATERTIGHT SURFACE MOUNT ROTARY SWITCH		3
76	717B	PAULUHN	WATERTIGHT PENDANT LIGHT W/13 W FLOR.		1
75	EPS	PAULUHN	EXPLOSION PROOF PENDANT LIGHT W/13 W FLOR.		1
74	TBD	KIM HOTSTART	KIM HOTSTART 1 kWe BLOCKHEATER W/ THERMOSTAT		1
73	TBD	TBD	7000 BTU/HR PACKAGE AIR CONDITIONER		1
72	M100R	L.C. DOANE	2X 20 INT. FLUSH MT. FLOR. LT.		38
71	F1703–EM	PAULUHN	LIGHTED EXIT SIGN, W/90 MIN. BATTERY		6
70	–	–	120V, 2 POLE CONTACTOR		4
69	A12B–50–24V	LAMARCHE	24V 50A RECTIFIER, USCG W/FAIL CONTACTS		2
68	7331	HOSE–MCCANN	GENERAL ALARM CONTACTOR, FLUSH MOUNTED, 30 A		2
67	–	–	PIPE HEAT TRACE TAPE, 3 W/FT. 120 V, WITH THERMOSTAT		A/R
66	HMC 870	HOSE–MCCANN	ROTATING BEACON, RED OR AMBER ON LOCATION		–
65	DLF26DIMRV	PAULUHN	RECESSED MOUNT OVERHD LIGHT, RED LENSE, DIMMABLE		4
64	–	TBD	RESCUE BOAT HOIST HPU		1
60	SCWT4A–Q	HALSEY–TAYLOR	FLOOR MOUNTED WATER COOLER		1
59	HPR5–10	HANKISON	COMPRESSED AIR DRYER, 10 SCFM, 120 V		1
58	A12B–30–24V	LAMARCHE	120 V/24 VDC 30 A RECTIFIER UNIT, USCG W/FAIL CONTACTS		1
57	M3	L.C. DOANE	2 X 20 EXT. SURF. MT. FLOR. LT.		45
56	M421C	L.C. DOANE	EXT 8 W FLOR. PATH LIGHT		15
55	M100R–E1	L.C. DOANE	2X 20 INT. FLUSH MT. FLOR. LT. WITH 90 MIN BATT.		19
54	M3–E1	L.C. DOANE	2X 20 EXT FLOR. SURF. MT. LT. WITH 90 MIN BATT.		35
53	–	PAULUHN	15 A, 120 VAC DUPLEX RECEPTACLE, WATERTIGHT BOX		TBD
52	TBD	TBD	SHUTDOWN SYSTEM POWER		TBD
51	96 SERIES	HOSE MCCANN	GENERAL ALARM BELLS, 120 VAC		12
50	A40–30–24V	LAMARCHE	MAIN GENSET STARTING BATT. CHARGER, USCG, 30A DUAL OUTPUT, 24 VDC		1
49	–	TBD	WTD HPU, 3/4 HP, 240 V 3 PH, W/ACCUM.		6
48	–	TBD	RESERVED		1
47	A40–30–24V	LAMARCHE	EDG BATTERY CHARGER, USCG, 30 A, 24 VDC OUTPUT		1
46	IQ301M	ANSUL	MULTIZONE SMOKE AND FIRE DET., USCG APP. BUILT IN BATTERY		1
45	–	TBD	CLOSED CIRCUIT TV SYS., 7 CAMERAS, SWITCHABLE, B&W MONITOR		1
44	–	TBD	CELL PHONE CHARGER SOCKET		1
43	CC–5100	CORNELL–CARR	100 W, VARIABLE SPEED, PANTOGRAPH BLADE		6
42	M–511A	KAHLENBERG	AIR HORN CONT., AT WILL AND PRESET SIGNALS		1
41	–	CARLISLE & FINCH	1000 W, PEDSTAL MOUNT, LEVER CONT.		2
40	QS1605	PAULUHN	HALOGEN FLOODLIGHT, 500 W, 120 V, STAINLESS STEEL		11
39	–	CORNELL–CARR	HEATED GLASS, 16 W/SQ. FT. 120 V		4
38	–	TBD	DEFOGGER CIRC. FANS, 100 CFM		2
37	K4XL	KANELFLAKT	HEAD EXHAUST FAN, IN LINE CENTRIFUGAL, 100 CFM		4
36	EHD–S	SLOAN	ELECTRIC HAND DRYER, 120 VAC, 1 PH.		3
35	–	TBD	UNDER COUNTER REFRIGERATOR, COMMERCIAL GRADE		1
34	CWTF15–2	BUNN	COFFEE MAKER, 2 HEATING ELEMENTS, COMMERCIAL GRADE		1
33	–	TBD	600 W MICROWAVE OVEN, COMMERCIAL GRADE		1
32	–	TEEL	SUBMERSIBLE PP, 1/2 HP		2
31	–	INDEECO	2 kW ELECTRIC DUCT HEATER, 120 V 3 PH W/120 CFM FAN		1
30	–	–	1/2 HP TOOL GRINDER, 120 V 1 PH		1
29	102 PL	TRANE	HYDRONIC UNIT HTR. 1/8 HP FAN, 45 MBTU		4
28	MP–5	FLOMAX	SELF PRIMING BASEPLATE MTG PEDESTAL PP., 3 HP, 30 GPM, 50 TDH		1
27	4195HL	VIKING	GEAR TYPE PUMP, 3 HP, 240 V 3 PH, 30 GPM, 50 TDH		2
26	TRIAD	INDEECO	5 kW ELECTRIC UNIT HEATER, 240 V 3 PH.		2
25	VENT FAN	HARTZELL	1200 CFM VANEAXIAL FAN, SINGLE SPEED, 1 1/2 HP, 240 V 3 PH		2
24	–	GOULD	WATER PRESSURE SET, 80 GAL TANK, 1 1/2 HP, 6 GPM, 70 PSIG		2
23	WATER HEATER	RHEEM	RHEEM COMMERCIAL 3 KW, 240 V, 1 PH, 30 GAL TANK W/TP VALVE		1
22	V–9	BURNHAM	400 MBTU INPUT, HYDRONIC 4 ZONES		1
21	NLP–6120–2	BASS	120 VAC LIGHT PANEL, BULB FAIL, AUTO SWITCHING		1
20	NQOD424L100CU MH23WP/MH23TK	SQUARE D	SQUARE D 3 PH, 240 V, 100 A, 24 POLES DIST PANEL WITH NQOD BOLT IN CIRCUIT BREAKERS AS NOTED		3
19	–	BASS	24 VDC DISTRIBUTION PANEL, 100 A RATED, 2 P CB'S, 20 POLE		9
18	A12B–60–24V	LAMARCHE	120 VAC/24 VDC RECTIFIER, 60 AMP RATING USCG		2
17	CUSTOM	IPS	IPS SUB H EMERG. SWBD W/AUTO BUS TRANSFER, SHORE POWER CONN.		1
16	NL1064T	NORTHERN LIGHTS	NORTHERN LIGHTS 65 KW, 240 V, 3 PH GENSET		1
15	–	–	ELEVATOR HPU 5 HP, 240 V, 3 PH, SINGLE SPEED		1
14	NQOD442L225CU MH35WP/MH35TK	SQUARE D	SQUARE D 3 PH, 240 V, 225 A, 42 POLES DIST PANEL WITH NQOD BOLT IN CIRCUIT BREAKERS AS NOTED		2
13	–	SPEEDAIRE	5 HP, 240 V, 3 PH, SINGLE SPEED, 17 ACFM, 175 PSI		1
12	2K4X3US–10RVM3	DURCO	15 HP, 240 V, 3 PH, SINGLE SPEED, 330 GPM 75 TDH		1
11	2K3X2US–13RVM3	DURCO	5 HP, 240 V, 3 PH, SINGLE SPEED, 137 GPM 40 TDH		1
10	T–2A–53342–3S	ACME	3 PH. 30 KVA DRY TRANSFORMER		2
9	CUSTOM	–	SHORE POWER CONNECTION BOX, 3 PH, 240 V, 100 A		1
8	–	GREENHECK	24" VANEAXIAL FAN, 9000 CFM @1" WG, 2 SPEED		2
7	–	GREENHECK	MSCF 25 1300 CFM AIR HANDLER W/60.000 BTU/HR HYDRONIC COIL		2
6	1K3X1.5US–81RVM3	DURCO	FIRE AND BILGE PP., 20 HP, 165 GPM, 210 TDH		2
5	FR 1510	FURUNO	X–BAND RADAR 12 KW OPEN ARRAY		2
4	MODEL S	JASTRAM	JASTRAM STEERING GEAR SYSTEM		2
3	NQOD430L100CU MH23WP/MH23TK	SQUARE D	SQUARE D 3 PH, 240 V, 100 A, 30 POLE DIST PANEL WITH WITH NQOD BOLT IN CIRCUIT BREAKERS AS NOTED		2
2	CUSTOM	IPS	IPS SUB H MAIN SWBD, PARALLELING, AUTO BUS TIE, 3 PH. 240 V		1
1	M1066T	NORTHERN LIGHTS	NORTHERN LIGHTS GENSET, 99 KW, 240 V, 3 PH, 60 HZ		2

BILL OF MATERIALS

NO.	REFERENCES
5	–
4	–
3	SPECIFICATION
2	575–02–321 ONE LINE DIAGRAM OF 24 VDC SYSTEM
1	575–02–305 LIGHTING PLAN

APPROVALS:	SUBMIT DATE	APPROVED BY	APPROVED DATE	RE–SUBMIT DATE	APPROVED BY	APPROVED DATE
OWNER	–	–	–	–	–	–
USCG	–	–	–	–	–	–
ABS	–	–	–	–	–	–
USPHS	–	–	–	–	–	–

Seaworthy Systems, Inc.
MARINE ENGINEERS NAVAL ARCHITECTS
P.O. BOX 965
ESSEX, CT 06426
USA
TEL: 860–767–9061
FAX: 860–767–1263

FOR
MAINE STATE FERRY SERVICE
P.O. BOX 645, 517A MAIN STREET
ROCKLAND, ME 04841–0645

TITLE 154' RO/RO/PASS FERRY

ONE LINE DIAGRAM OF ELECTRICAL SYSTEM

CHECKED BY	AUTH^D BY	SCALE
JAH 09–30–05	JAH 09–30–05	NONE
DRAWN BY	ORIG^L DATE	
DR	9–20–05	DIMS IN INCHES UNLESS OTHERWISE STATED

SIZE	DRG No.	REV.	SHEET
D	575–02–320	–	1 OF 7

SSI FILE No. s:\active\projnumb\575–02\575–02–320.dwg

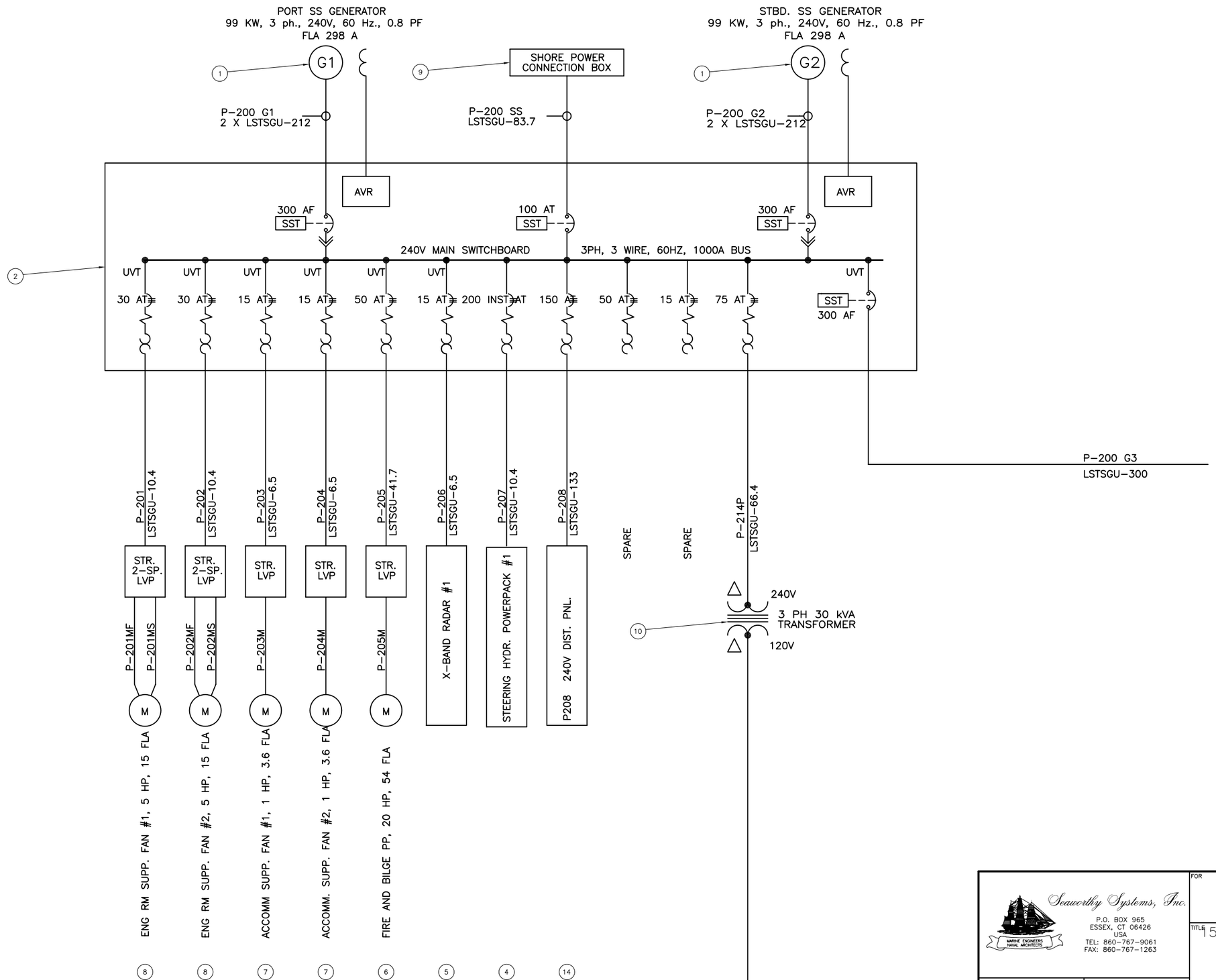

Seaworthy Systems, Inc.
MARINE ENGINEERS NAVAL ARCHITECTS
P.O. BOX 965
ESSEX, CT 06426
USA
TEL: 860-767-9061
FAX: 860-767-1263

FOR
MAINE STATE FERRY SERVICE
P.O. BOX 645, 517A MAIN STREET
ROCKLAND, ME 04841-0645

TITLE
154' RO/RO/PASS FERRY

ONE LINE DIAGRAM
OF ELECTRICAL SYSTEM

SCALE
N.T.S.

DIMS IN INCHES
UNLESS OTHERWISE
STATED

SIZE	DRG No.	REV.	SHEET
D	575-02-320	—	2 OF 7

SSI FILE No. s:\active\projnumb\575-02\575-02-320.dwg

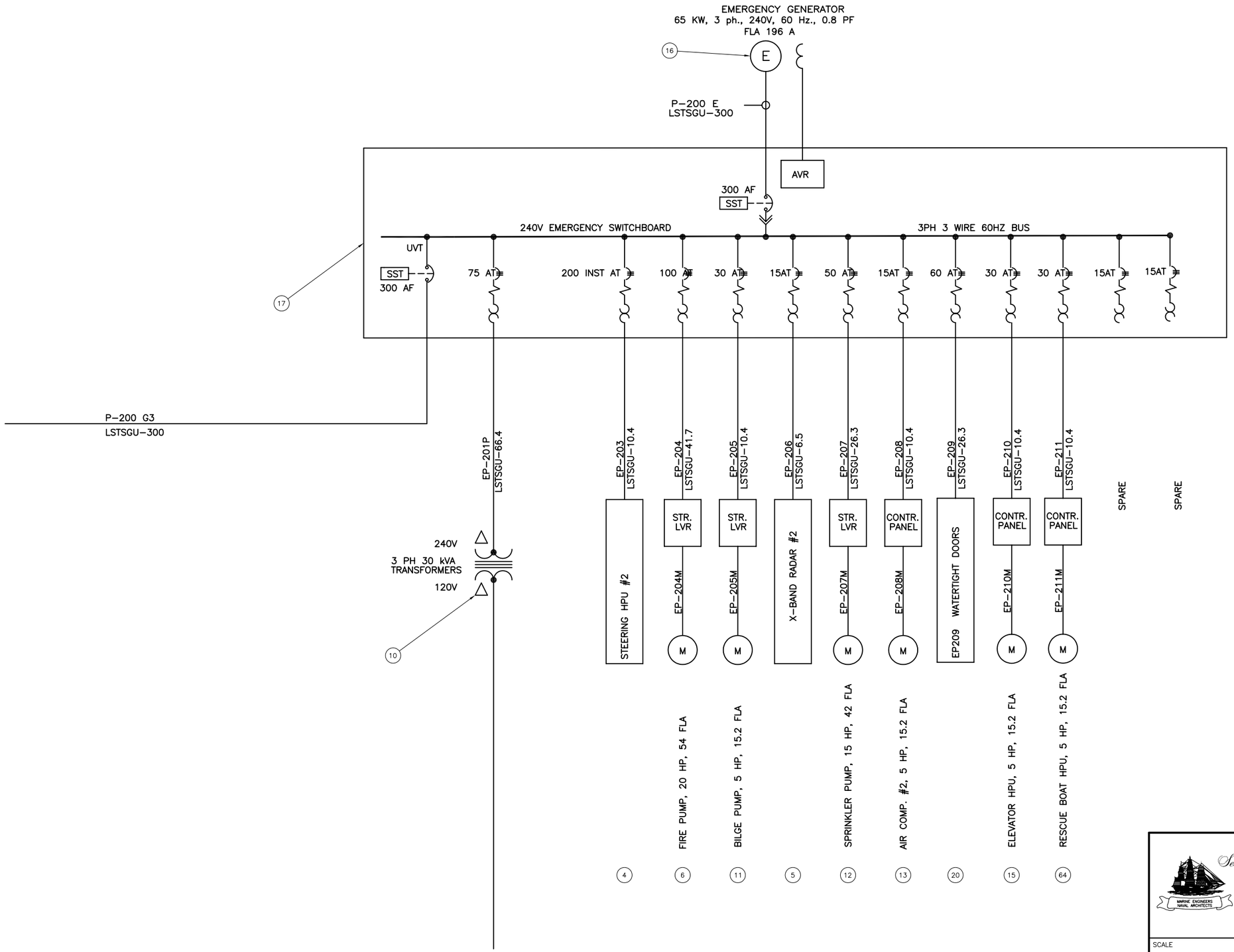

Seaworthy Systems, Inc.
MARINE ENGINEERS NAVAL ARCHITECTS
P.O. BOX 965
ESSEX, CT 06426
USA
TEL: 860-767-9061
FAX: 860-767-1263

FOR
MAINE STATE FERRY SERVICE
P.O. BOX 645 517A MAIN STREET
ROCKLAND, ME 04841-0645

TITLE
154' RO/RO/PASS FERRY

ONE LINE DIAGRAM
OF ELECTRICAL

SCALE
NTS

DIMS IN INCHES
UNLESS OTHERWISE
STATED

SIZE	DRG No.	REV.	SHEET
D	575-02-320	—	3 OF 7

SSI FILE No. s:\active\projnumb\575-02\575-02-320.dwg

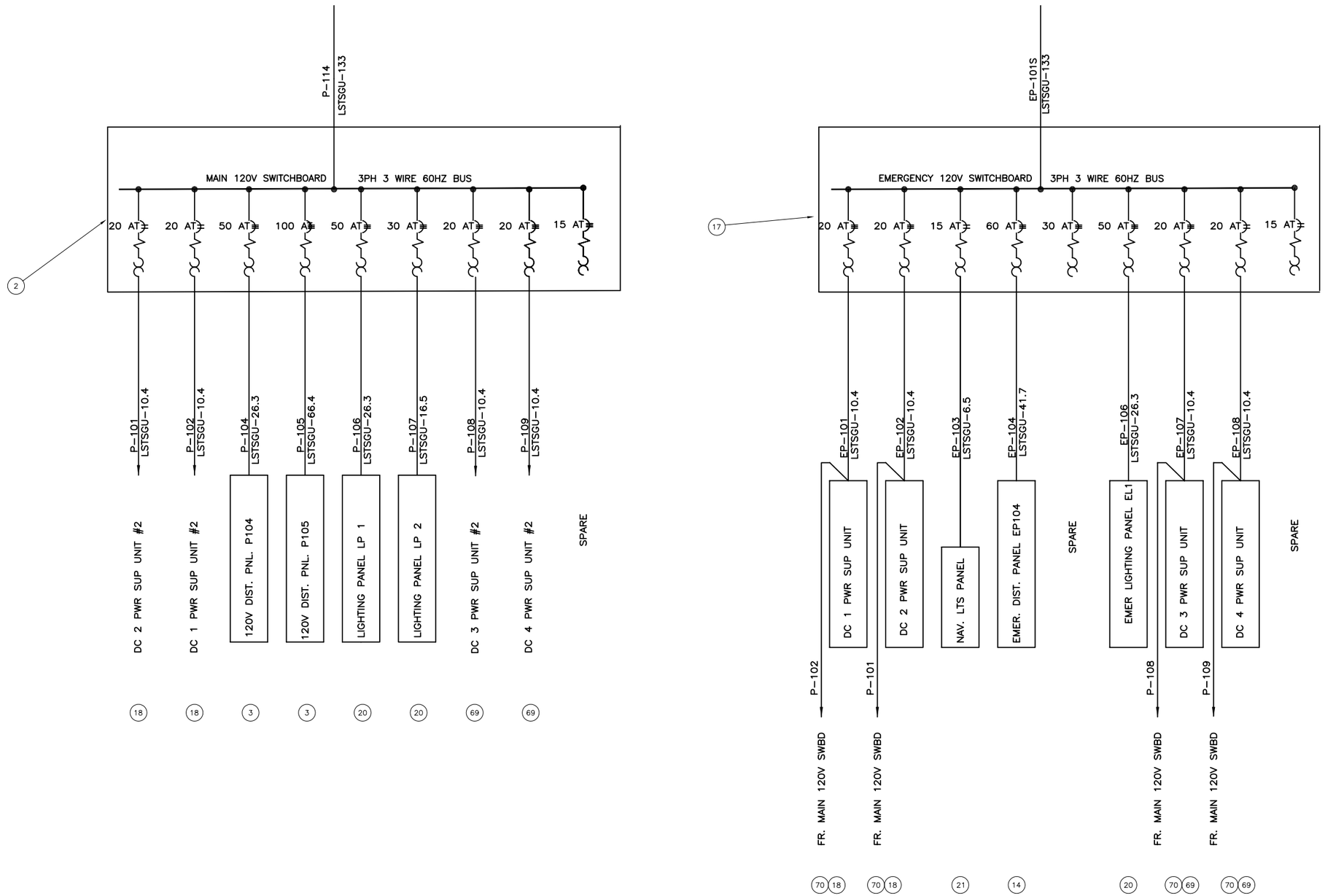

Seaworthy Systems, Inc.
MARINE ENGINEERS NAVAL ARCHITECTS
P.O. BOX 965
ESSEX, CT 06426
USA
TEL: 860-767-9061
FAX: 860-767-1263

FOR
MAINE STATE FERRY SERVICE
P.O. BOX 645 517A MAIN STREET
ROCKLAND, ME 04841-0645

TITLE
154' RO/RO/PASS FERRY

ONE LINE DIAGRAM
OF ELECTRICAL SYSTEM

SCALE		SIZE	DRG No.	REV.	SHEET
NTS	DIMS IN INCHES UNLESS OTHERWISE STATED	D	575-02-320	—	4 OF 7

SSI FILE No. s:\active\projnumb\575-02\575-02-320.dwg

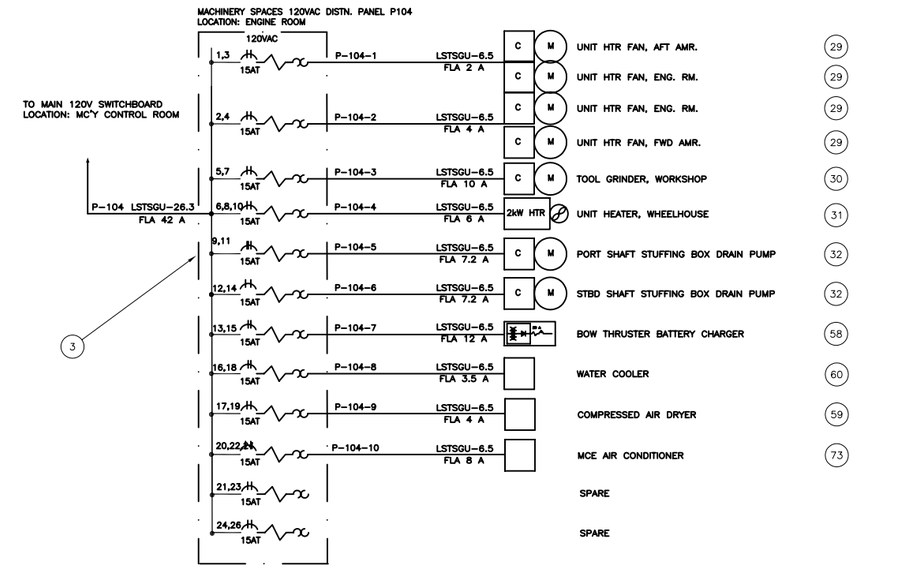

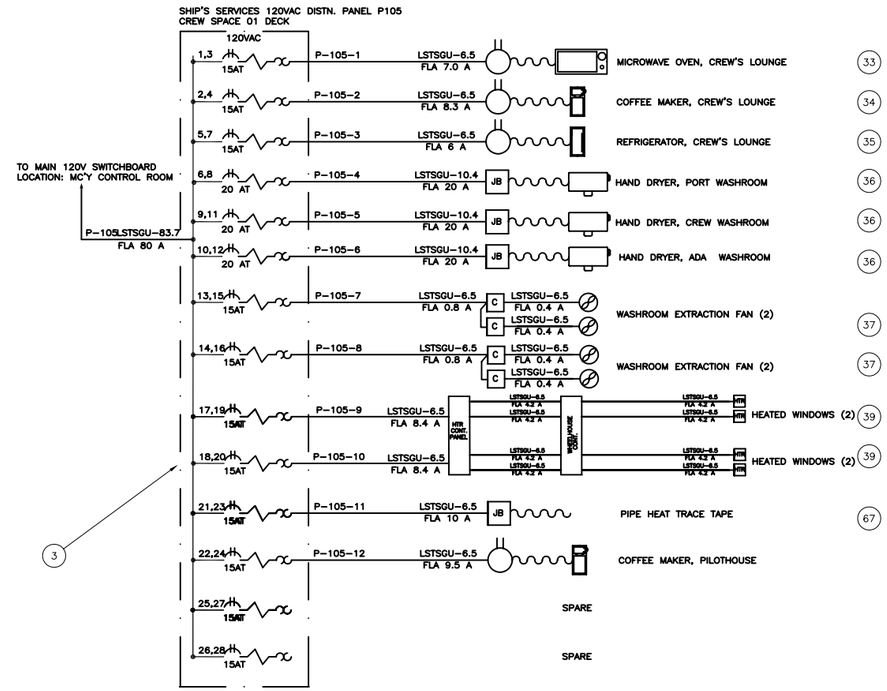

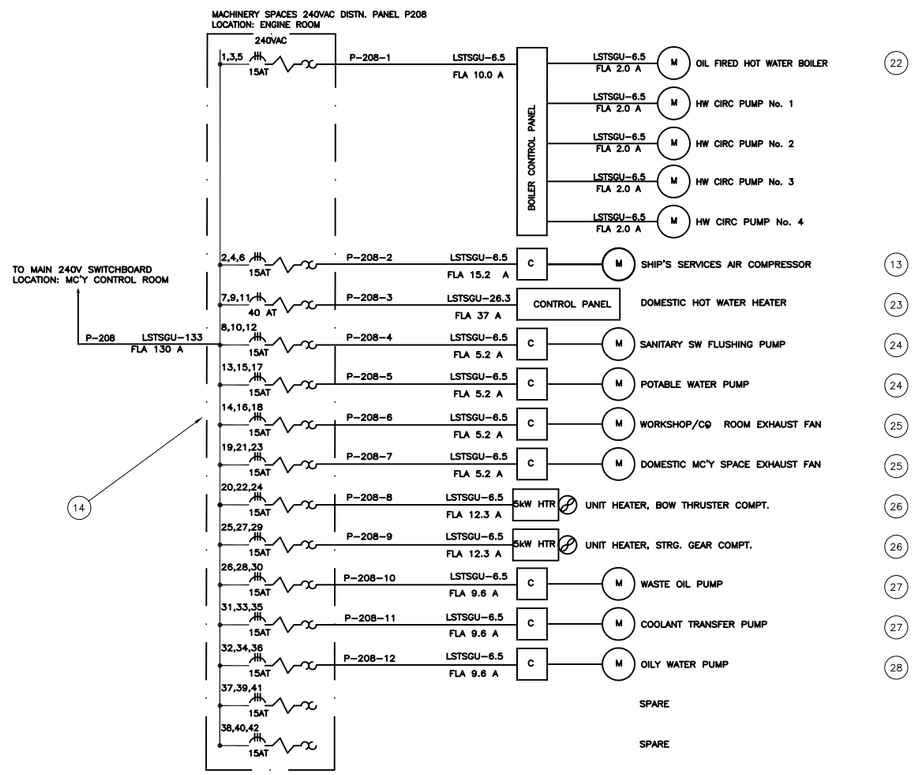

Seaworthy Systems, Inc.
MARINE ENGINEERS NAVAL ARCHITECTS
P.O. BOX 965
ESSEX, CT 06426
USA
TEL: 860-767-9061
FAX: 860-767-1263

FOR
MAINE STATE FERRY SERVICE
P.O. BOX 645, 517A MAIN STREET
ROCKLAND, ME 04841-0645

TITLE
154' RO/RO/PASS FERRY

ONE LINE DIAGRAM
OF ELECTRICAL SYSTEM

SCALE	DIMS IN INCHES UNLESS OTHERWISE STATED	SIZE	DRG No.	REV.	SHEET
N.T.S.		D	575-02-320	—	5 OF 7

SSI FILE No. s:\active\projnumb\575-02\575-02-320.dwg

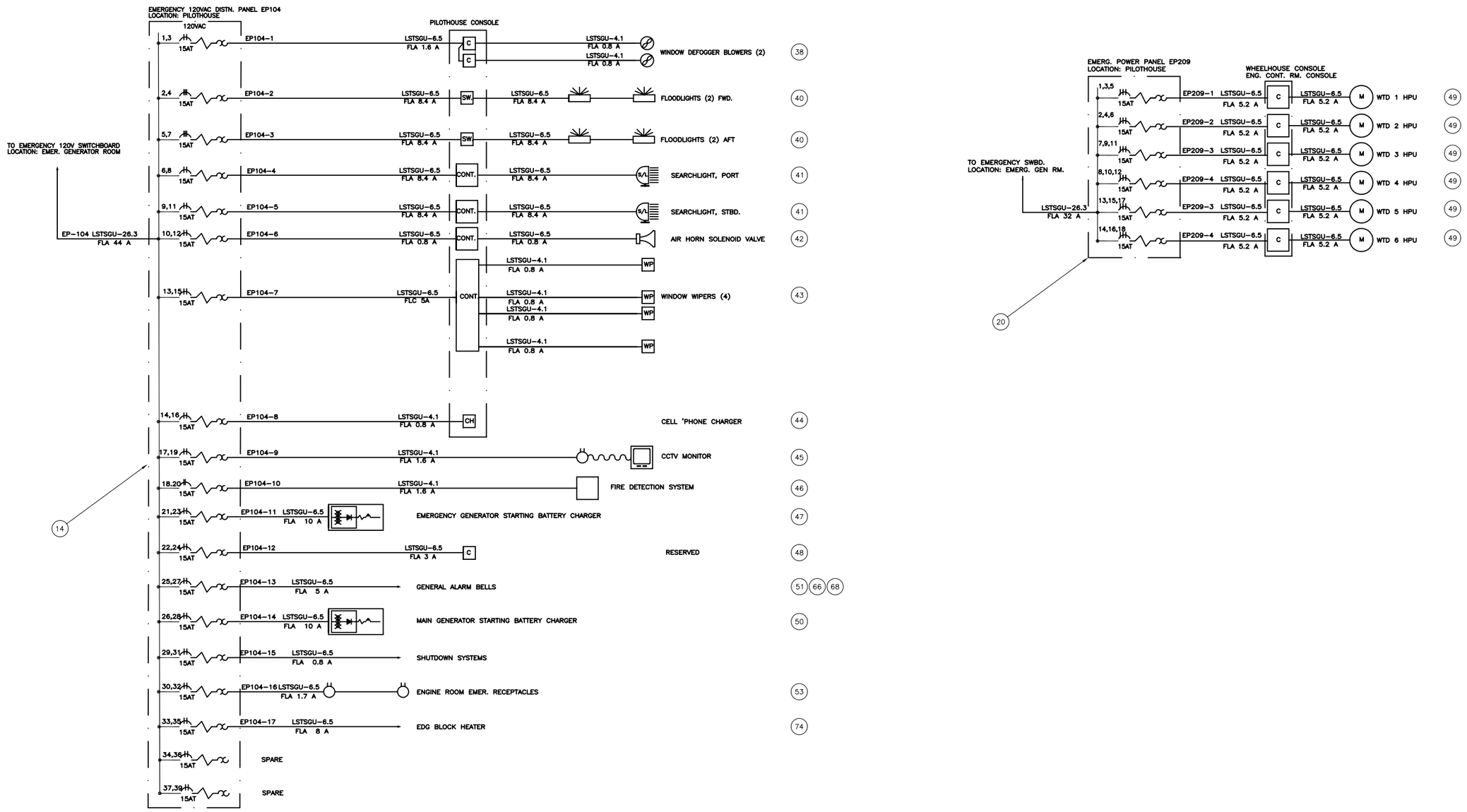

Seaworthy Systems, Inc.
MARINE ENGINEERS NAVAL ARCHITECTS
P.O. BOX 965
ESSEX, CT 06426
USA
TEL: 860-767-9061
FAX: 860-767-1263

FOR
MAINE STATE FERRY SERVICE
P.O. BOX 645 517A MAIN STREET
ROCKLAND, ME 04841-0645

TITLE
154' RO/RO/PASS FERRY

ONE LINE DIAGRAM
OF ELECTRICAL SYSTEM

SCALE		SIZE	DRG No.	REV.	SHEET
NTS	DIMS IN INCHES UNLESS OTHERWISE STATED	D	575-02-320	—	6 OF 7

SSI FILE No. s:\active\projnumb\575-02\575-02-320.dwg

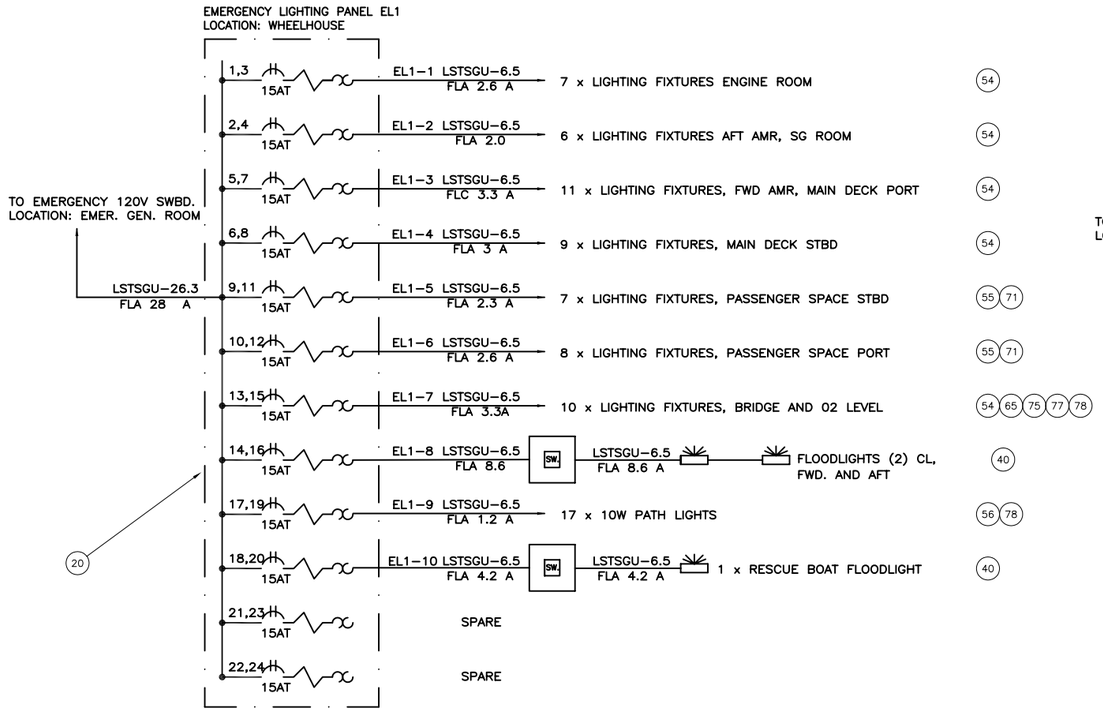

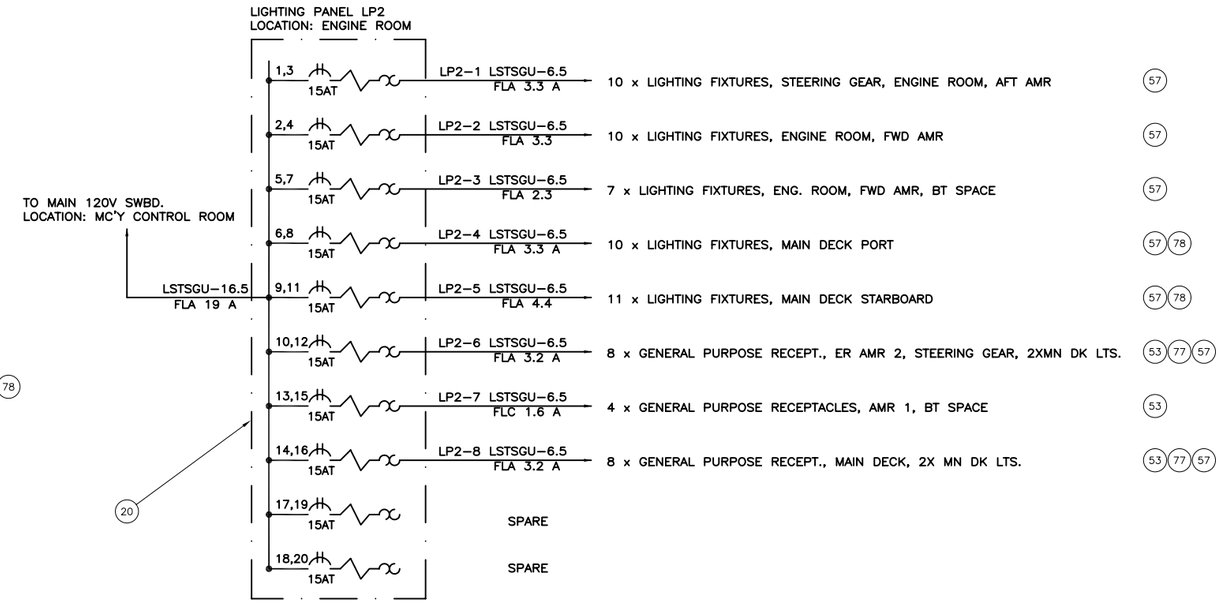

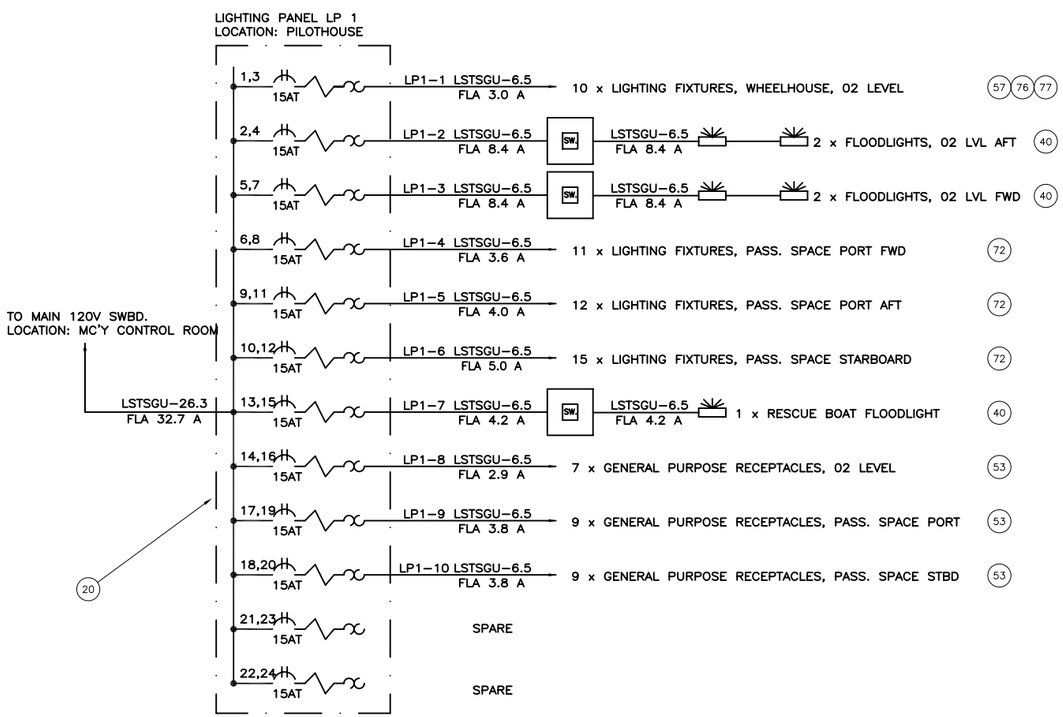

Seaworthy Systems, Inc.
MARINE ENGINEERS NAVAL ARCHITECTS
P.O. BOX 965
ESSEX, CT 06426
USA
TEL: 860-767-9061
FAX: 860-767-1263

FOR
MAINE STATE FERRY SERVICE
P.O. BOX 645 517A MAIN STREET
ROCKLAND, ME 04841-0645

TITLE 154' RO/RO/PASS FERRY

ONE LINE DIAGRAM OF ELECTRICAL SYSTEM

SCALE NTS

DIMS IN INCHES UNLESS OTHERWISE STATED

SIZE	DRG No.	REV.	SHEET
D	575-02-320	—	7 OF 7

SSI FILE No. s:\active\projnumb\575-02\575-02-320.dwg

SYMBOLS LIST

G1	DIESEL GENERATOR SET	M	MOTOR
	AC EMERG./NORM. AUTO TRANS. RLY		VENTILATION FAN
	BATTERY CHARGER	C	CONTROLLER
	24 VDC BATTERY BANK		3 PH. TRANSFORMER
	DC EMERG/NORM. AUTO TRANS. SW.	A	ENGINE DRIVEN ALTERNATOR
	CIRCUIT BREAKER		LINE SIZE
	BATTERY ON–OFF SWITCH		ITEM SUPPLIED W/PRINCIPAL COMPONENT
	VACUUM GAUGE		STOP VALVE
	END OF HEADER OR DISTR'N MANIFOLD		

GENERAL NOTES:

1. THE INSTALLATION OF ALL EQUIPMENT SHALL MEET THE REQUIREMENTS OF ABS RULES FOR STEEL VESSELS LASS THAN 295 FT, CFR 46 SUBCHAPTER H AND BE TO THE SATISFACTION OF THE OCMI.

2. THE CABLE SIZES SELECTED ARE FOR 50 C AMBIENT AND 75 C CABLE, SINGLE BANKED.

3. ALL CABLES SHALL BE PROPERLY SUPPORTED THROUGHOUT THEIR LENGTH WITH METAL STRAPS AT NO MORE THAN 24" SPACING.

4. ALL EQUIPMENT SHALL BE PROPERLY INTERFACED WITH EMERGENCY CONTROLS AND SYSTEMS AS REQUIRED BY ABS AND USCG.

5. CABLE PENETRATIONS THROUGH WATERTIGHT AND FIRE BOUNDARIES SHALL NOT COMPROMISE THE WATERTIGHT AND FIRE INTEGRITY OF THE BOUNDARY.

7. CIRCUIT BREAKERS SHALL BE HELD IN WITH SCREWS, HAVE AN AIC OF 250A AND BE RATED FOR SWITCHING SERVICE.

8. ELECTRICAL DISTRIBUTION PANELS SHALL BE OF DRIPROOF CONSTRUCTION AND OF THE PROPER AMP RATING FOR THE PANEL DEMAND LOAD.

9. SUFFICIENT CLEARANCE IN FRONT OF ELECTRICAL DISTRIBUTION PANELS AND CONTROLLERS TO PERMIT FULL OPENING OF THE FRONT DOOR.

10. ALL ELECTRICAL DISTRIBUTION PANELS AND CONTROLLERS SHALL HAVE ELEMENTARY CIRCUIT DIAGRAMS ATTACHED INSIDE THE PANEL DOOR.

11. THE MINIMUM WIRE SIZE FOR LIGHTING CIRCUITS SHALL BE 4.1 MCM (14 AWG). THE MINIMUM WIRE SIZE FOR POWER CIRCUITS SHALL BE 6.5 MCM (12 AWG).

12. ALL ELECTRICAL DISTRIBUTION PANELS AND CONTROLLERS SHALL BE PROPERLY GROUNDED TO THE VESSEL'S HULL.

STATE OF MAINE
JOHN A. HUNTER
NO. 10737
REGISTERED PROFESSIONAL ENGINEER
10-3-05

REVISIONS

REV.	DATE	DESCRIPTION	SHEET	ZONE	AUTH#
A	–	–			
B	–	–			
C	–	–			
D	–	–			

ITEM	MODEL	MANUFACTURER	DESCRIPTION	MATERIAL	QTY
44	–	NORTHERN LIGHTS	STARTING MOTOR		3
43	–	–	CC TV CAMERAS		–
42	A40–30–24V	LAMARCHE	24 VDC 30A BATTERY CHARGER USCG		1
41	–	NEWMAR	BATTERY ISOLATOR, 2 INPUT, 1 OUTPUT, 80 A		3
40	–	NORTHERN LIGHTS	80 A ENGINE DRIVEN ALTERNATOR		3
39	2300A	GUEST	HEAVY DUTY BATTERY ON–OFF–ON DISCONNECT SWITCH		3
38	A12B–30–24V	LAMARCHE	24 VDC, 30 A POWER SUPPLY W/ FAIL CONTACTS, USCG		1
37	A40–30–24V	LAMARCHE	24 VDC, 30 A 2 OUTPUT BATTERY CHARGER W/ FAIL CONTACTS, USCG		1
36	–	–	–		–
35	8D	ROLLS	ENGINE STARTING BATTERY, 12 VDC, 230 A–HR		6
34	SELR–PB	HOSE–MCCANN	STANDARD SURFACE MOUNT, 1 STATION SP PHONE WITH BELL/LIGHT		3
33	SELR–PB	HOSE–MCCANN	STANDARD SURFACE MOUNT, 1 STATION SP PHONE WITH BELL/LIGHT		3
32	A12B–50–24V	LAMARCHE	24 VDC, 50 A POWER SUPPLY W/ FAIL CONTACTS, USCG		2
31	–	ZF MATHERS	ENGINE/TRANSMISSION CONTROLS AND INTERFACES		TBD
30	–	THRUSTMASTER	CATERPILLAR BT ENGINE CONTROLS AND INTERFACES		TBD
29	–	CATERPILLAR	CATERPILLAR ENGINE CONTROLS AND INTERFACES		TBD
28	–	TBD	FIRE SAFETY SHUTDOWNS		TBD
27	–	BASS	BILGE ALARM PANEL, 7 ZONES W/ANNUNCIATOR AND LT.		2
26	MODEL S	JASTRAM	PROPULSION AND STEERING CONTROLS		1
25	–	BASS	MACHINERY ALARM PANEL, 20 CHANNEL W/ANUNCIATOR AND LIGHT		1
24	MODEL S	JASTRAM	RUDDER ANGLE INDICATOR AND REPEATERS		4
23	SFLR–B	HOSE–MCCANN	SP PHONE SYSTEM, 6 STATION W/ RINGER AND LT		3
22	A31–250–24V–A6	LAMARCHE	24 VDC/120 VAC INVERTER, 200 W OUTPUT		1
21	HMC 870	HOSE–MCCANN	ROTATING BEACON, RED OR AMBER ON LOCATION		–
20	–	TBD	PA SYSTEM, 25 W PER SPEAKER, 6 CHANNELS		1
19	–	WEEMS & PLATH	QUARTZ, 6" FACE, 12 AND 24 HR TIME		4
18	–	WEEMS & PLATH	ANEROID TYPE BAROMETER		1
17	A12B–60–24V	LAMARCHE	24 VDC, 60 A POWER SUPPLY W/ FAIL CONTACTS, USCG		2
16	–	WEEMS & PLATH	WINDSPEED, DIRECTION INDICATOR		1
15	48–12–6I	NEWMAR	24/12 DC–DC CONVERTER, 5 A		2
14	FM–3000	FURUNO	VHF		2
13	RD–30	FURUNO	ECHO SOUNDER, 200 kHZ		1
12	GP–37	FURUNO	DGPS		1
11	–	RITCHIE	MAGNETIC COMPASS		1
10	NAVIGAT X MK 1	SPERRY MARINE	GYRO COMPASS		1
9	NAVPILOT 500	FURUNO	AUTO PILOT		1
8	FEA–2105	FURUNO	CHART PLOTTER		1
7	30H	ROLLS	100 A–HR, 12 VDC BATTERY W/CASE		8
6	APS–70	NEWMAR	24 VDC 70 A RATING 1 POLE AUTO SENSE SWITCH		4
5	FR–1510 MK3	FURUNO	FURUNO X–BAND RADAR SET, 12 kW		2
4	–	–	–		–
3	–	BASS	BASS 24 VDC DIST PANEL. CIRCUITS AS NOTED		1
2	NL1064A	NORTHERN LIGHTS	NORTHERN LIGHTS GENSET, 99 KW, 240 V, 3 PH, 60 HZ		2
1	M1066T	NORTHERN LIGHTS	NORTHERN LIGHTS GENSET, 99 KW, 240 V, 3 PH, 60 HZ		2

BILL OF MATERIALS

NO.	REFERENCES
5	–
4	–
3	SPECIFICATIONS
2	575–02–300, ELECTRICAL LOAD ANALYSIS
1	575–02–320, ONE LINE DIAGRAM OF AC SYSTEM

APPROVALS:	SUBMIT DATE	APPROVED BY	APPROVED DATE	RE–SUBMIT DATE	APPROVED BY	APPROVED DATE
OWNER	–	–	–	–	–	–
USCG	–	–	–	–	–	–
ABS	–	–	–	–	–	–
USPHS	–	–	–	–	–	–

Seaworthy Systems, Inc.
MARINE ENGINEERS NAVAL ARCHITECTS
P.O. BOX 965
ESSEX, CT 06426
USA
TEL: 860–767–9061
FAX: 860–767–1263

CHECKED BY	AUTH# BY	SCALE
JAH 09–30–05	JAH 09–20–05	NONE
DRAWN BY DR	ORIG. DATE 08–03–05	DIMS IN INCHES UNLESS OTHERWISE STATED

FOR
MAINE STATE FERRY SERVICE
P.O. BOX 645, 517A MAIN STREET
ROCKLAND, ME 04841–0645

TITLE 154' RO/RO/PASS FERRY

ONE LINE DIAGRAM OF 24 VDC ELECTRICAL SYSTEM

SIZE D | DRG No. 575–02–321 | REV. – | SHEET 1 OF 6

SSI FILE No. s:\active\projnumb\575–02\575–02–321.dwg

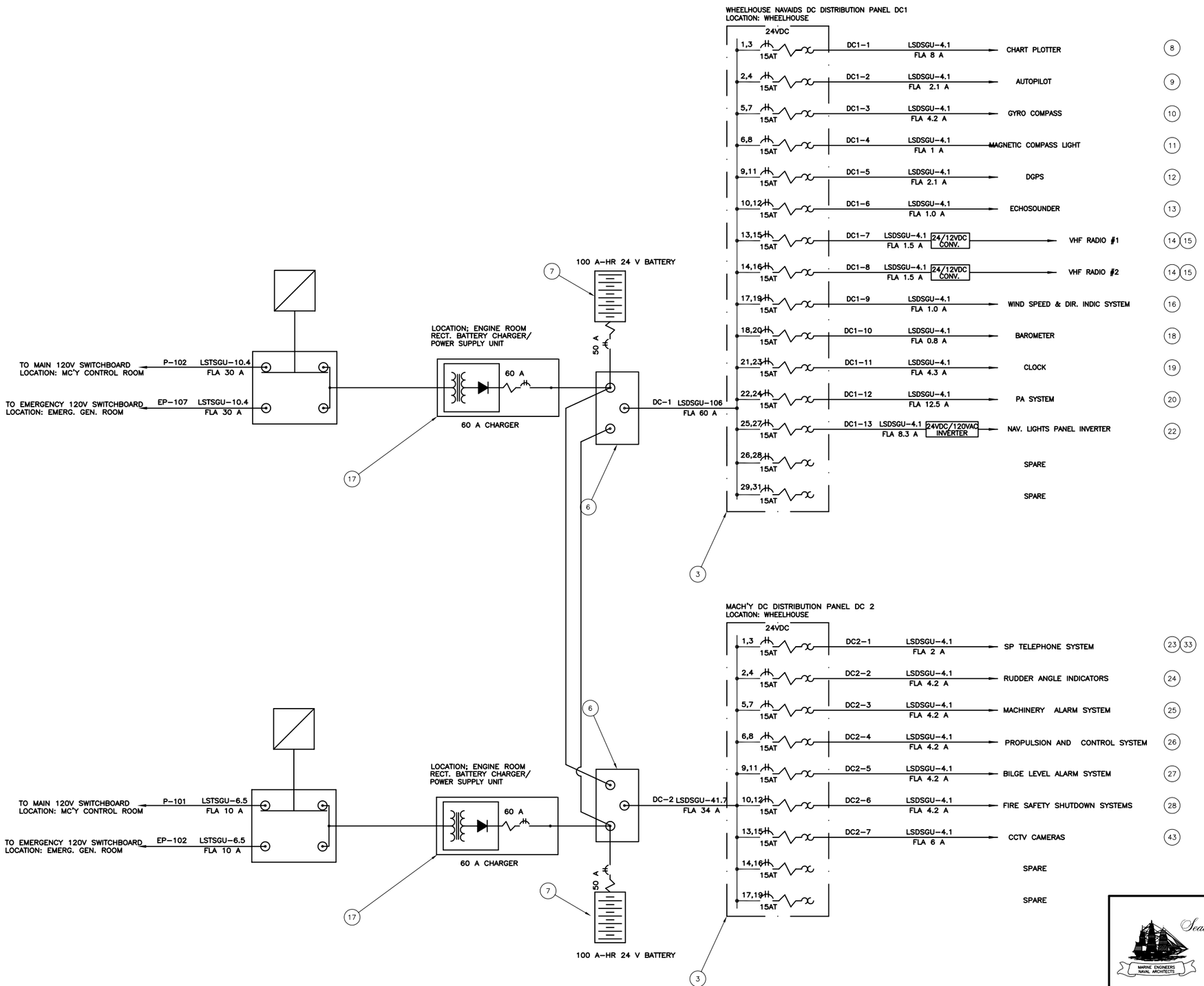

Seaworthy Systems, Inc.
MARINE ENGINEERS NAVAL ARCHITECTS
P.O. BOX 965
ESSEX, CT 06426
USA
TEL: 860-767-9061
FAX: 860-767-1263

FOR
MAINE STATE FERRY SERVICE
P.O. BOX 645 517A MAIN STREET
ROCKLAND, ME 04841-0645

TITLE
154' RO/RO/PASS FERRY
ONE LINE DIAGRAM
OF 24 VDC ELECTRICAL SYSTEM

SCALE		SIZE	DRG No.	REV.	SHEET
NTS	DIMS IN INCHES UNLESS OTHERWISE STATED	D	575-02-321	—	2 OF 6

SSI FILE No. s:\active\projnumb\575-02\575-02-321.dwg

575-02-321

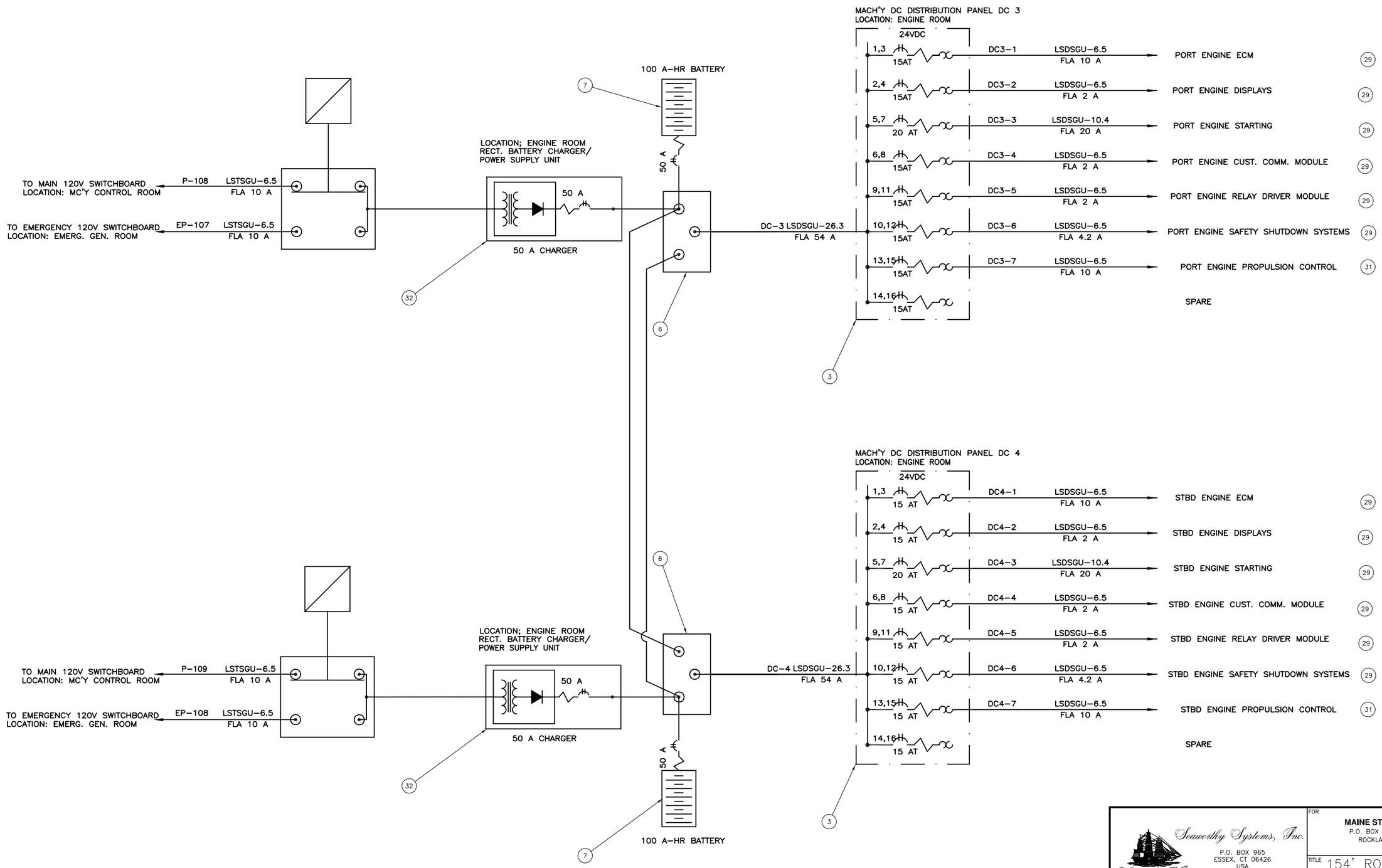

Seaworthy Systems, Inc.
MARINE ENGINEERS NAVAL ARCHITECTS
P.O. BOX 965
ESSEX, CT 06426
USA
TEL: 860-767-9061
FAX: 860-767-1263

FOR
MAINE STATE FERRY SERVICE
P.O. BOX 645 517A MAIN STREET
ROCKLAND, ME 04841-0645

TITLE
154' RO/RO/PASS FERRY
ONE LINE DIAGRAM
OF 24 VDC ELECTRICAL SYSTEM

SCALE		SIZE	DRG No.	REV.	SHEET
NTS	DIMS IN INCHES UNLESS OTHERWISE STATED	D	575-02-321	—	3 OF 6

SSI FILE No. s:\active\projnumb\575-02\575-02-321.dwg

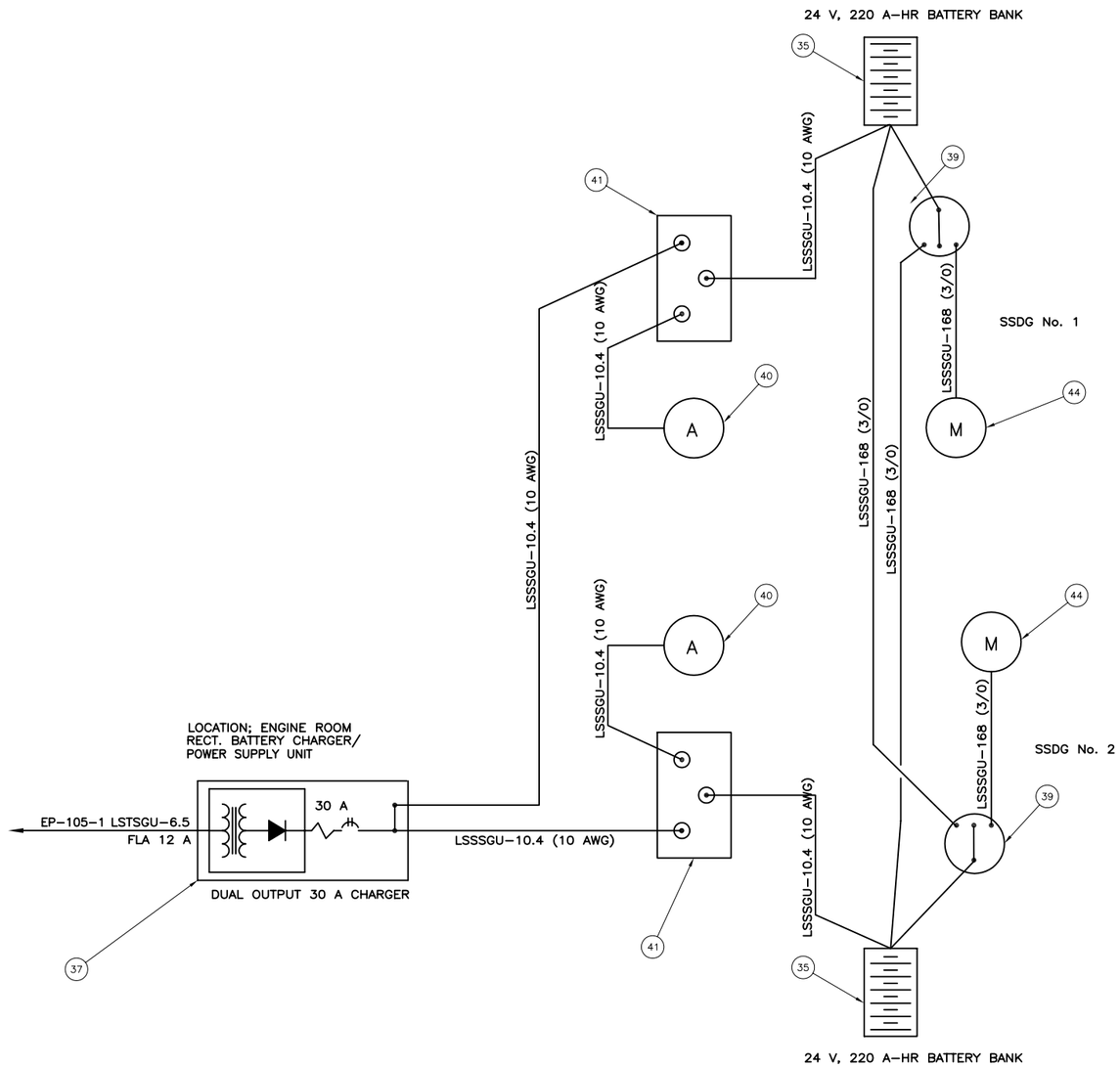

Seaworthy Systems, Inc.
MARINE ENGINEERS NAVAL ARCHITECTS
P.O. BOX 965
ESSEX, CT 06426
USA
TEL: 860–767–9061
FAX: 860–767–1263

FOR
MAINE STATE FERRY SERVICE
P.O. BOX 645 517A MAIN STREET
ROCKLAND, ME 04841–0645

TITLE 154' RO/RO/PASS FERRY

ONE LINE DIAGRAM
OF 24 VDC ELECTRICAL SYSTEM

SCALE		SIZE	DRG No.	REV.	SHEET
NTS	DIMS IN INCHES UNLESS OTHERWISE STATED	D	575–02–321	—	4 OF 6

SSI FILE No. s:\active\projnumb\575-02\575-02-321.dwg

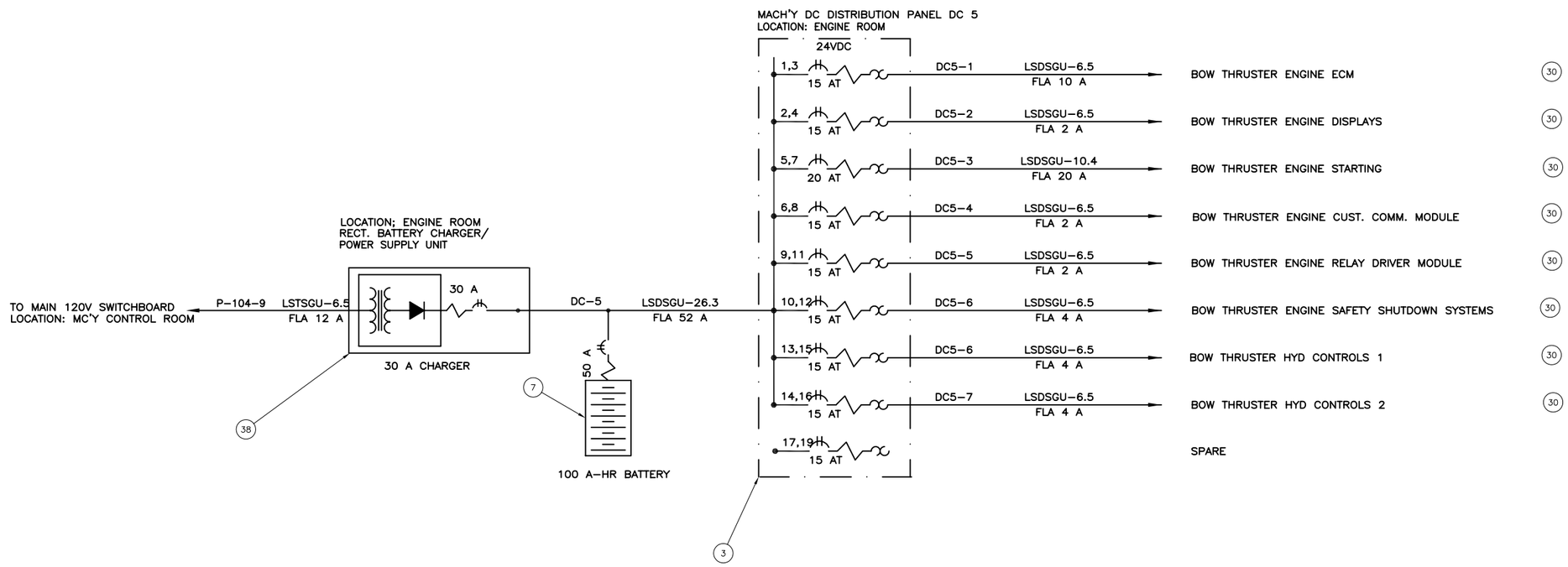

Seaworthy Systems, Inc.
MARINE ENGINEERS NAVAL ARCHITECTS
P.O. BOX 965
ESSEX, CT 06426
USA
TEL: 860–767–9061
FAX: 860–767–1263

FOR
MAINE STATE FERRY SERVICE
P.O. BOX 645 517A MAIN STREET
ROCKLAND, ME 04841–0645

TITLE
154' RO/RO/PASS FERRY
ONE LINE DIAGRAM
OF 24 VDC ELECTRICAL SYSTEM

SCALE	DIMS IN INCHES UNLESS OTHERWISE STATED	SIZE	DRG No.	REV.	SHEET
NTS		D	575–02–321	–	5 OF 6

SSI FILE No. s:\active\projnumb\575–02\575–02–321.dwg

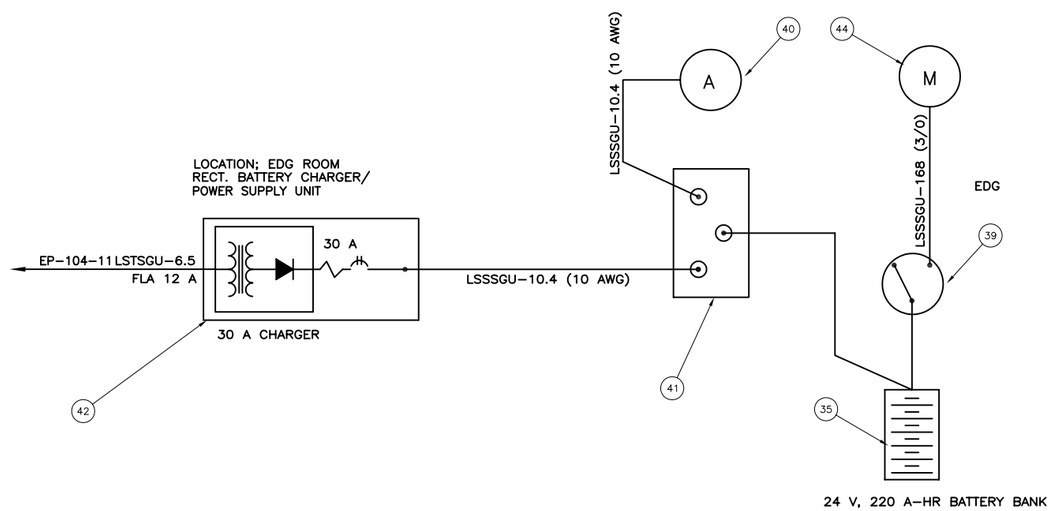

Seaworthy Systems, Inc.
MARINE ENGINEERS NAVAL ARCHITECTS
P.O. BOX 965
ESSEX, CT 06426
USA
TEL: 860-767-9061
FAX: 860-767-1263

FOR
MAINE STATE FERRY SERVICE
P.O. BOX 645 517A MAIN STREET
ROCKLAND, ME 04841-0645

TITLE 154' RO/RO/PASS FERRY

ONE LINE DIAGRAM
OF 24 VDC ELECTRICAL SYSTEM

SCALE		SIZE	DRG No.	REV.	SHEET
NTS	DIMS IN INCHES UNLESS OTHERWISE STATED	D	575-02-321	—	6 OF 6

SSI FILE No. s:\active\projnumb\575-02\575-02-321.dwg

DO NOT SCALE, IF IN DOUBT ASK

REVISIONS					
REV.	DATE	DESCRIPTION	SHEET	ZONE	AUTH#
A	01/16/2006	REV TO GA PLANS, MOVED STERN LIGHT AND ADDED NUC LIGHTS	1	MULT.	JAH
B	–	–			
C	–	–			
D	–	–			

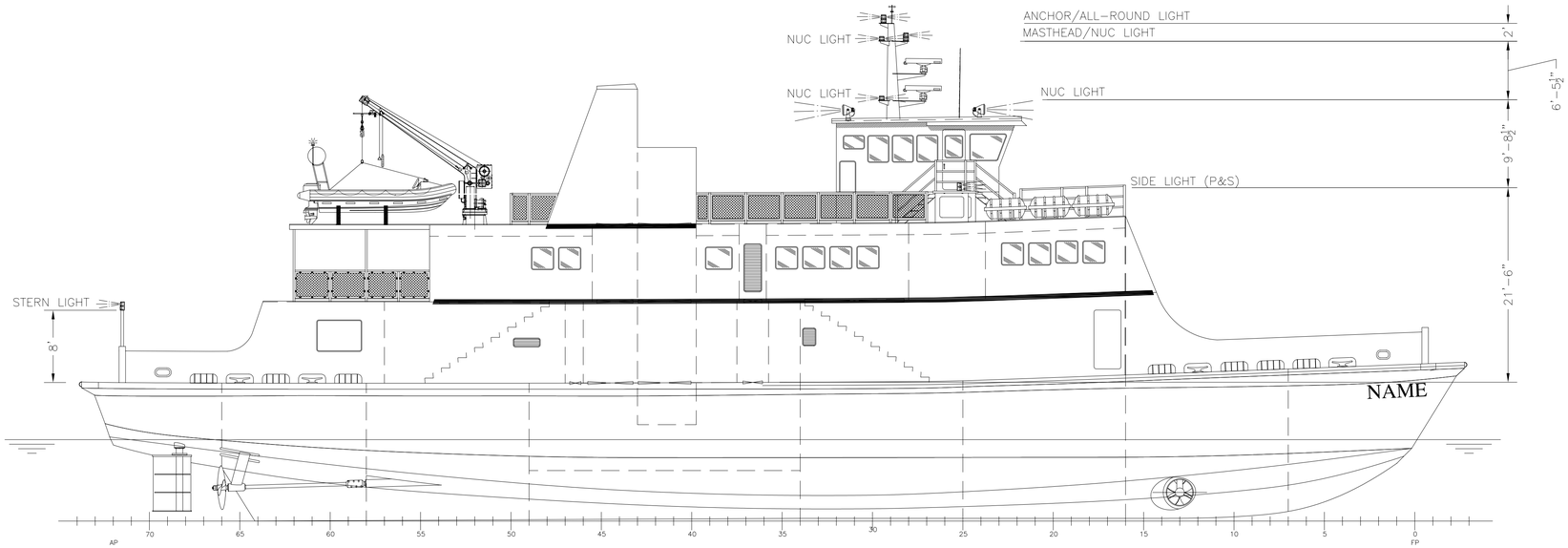

STARBOARD PROFILE

GENERAL NOTES:

1. ALL MATERIALS, WORKMANSHIP AND INSTALLATION TO MEET THE REQUIREMENTS OF CFR 46 SUBCHAPTER H AND BE TO THE SATISFACTION OF THE USCG OCMI.

2. ALL DIMENSIONS ARE APPROXIMATE AND SHOULD BE VERIFIED IN THE FIELD PRIOR TO INSTALLATION.

3. NAVIGATION LIGHTS CONTROL PANEL TO HAVE AUTOMATIC VISUAL AND AUDIBLE WARNING IN THE EVENT OF A LAMP FAILURE, SELECTOR SWITCH FOR EACH NAVIGATION LIGHT, VISUAL INDICATOR FOR EACH LIGHTED LAMP.

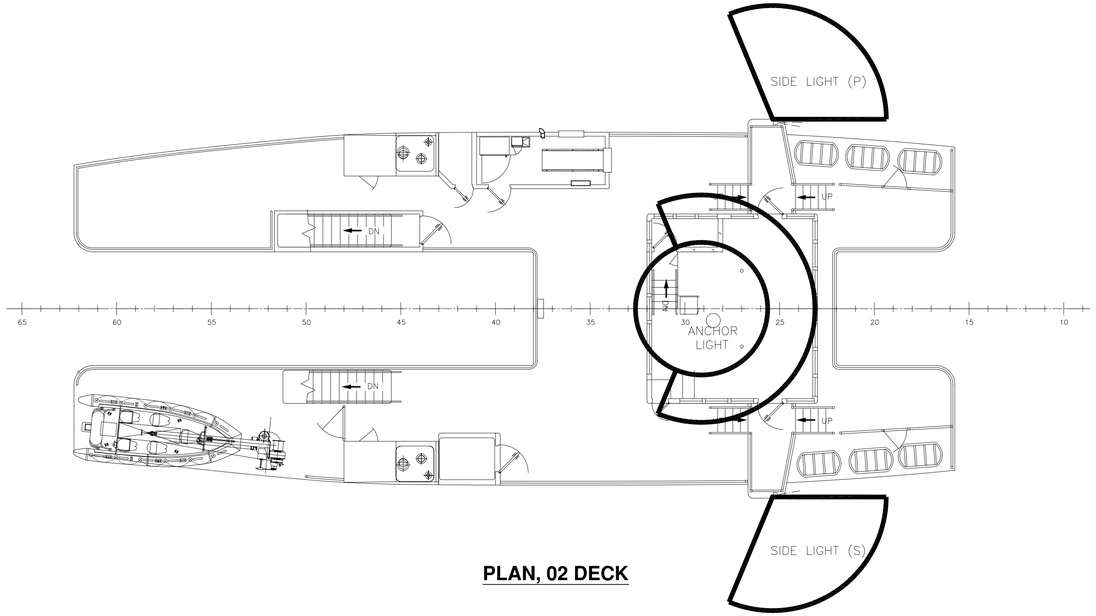

PLAN, 02 DECK

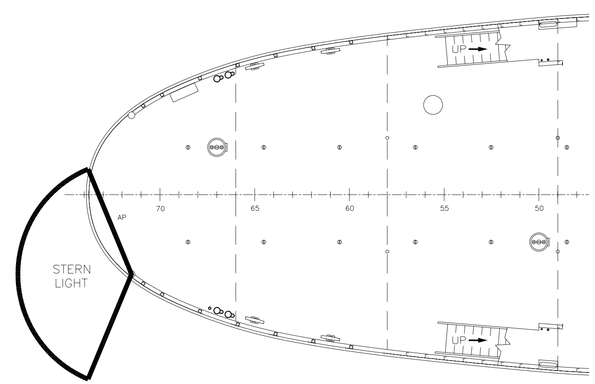

PARTIAL PLAN, MAIN DECK

STATE OF MAINE
JOHN A. HUNTER
NO. 10737
REGISTERED PROFESSIONAL ENGINEER
10-3-05

SYM.	LIGHT(QTY.)	TYPE	RANGE
	MASTHEAD (1)	225°, WHITE, DOUBLE UNIT	5 MILES
	SIDELIGHT (2)	112.5°, RED (P), DBL UNIT 112.5°, GRN (S), DBL UNIT	2 MILES
	STERNLIGHT (1)	135°, WHITE, DOUBLE UNIT	2 MILES
	ANCHOR LIGHT (1)	360°, WHITE, DOUBLE UNIT	3 MILES

NO.	REFERENCES
3	–
2	–
1	ONE LINE DIAGRAM 575-02-320

APPROVALS:	SUBMIT DATE	APPROVED BY	APPROVED DATE	RE-SUBMIT DATE	APPROVED BY	APPROVED DATE
OWNER	–	–	–	–	–	–
USCG	–	–	–	–	–	–
ABS	–	–	–	–	–	–
USPHS	–	–	–	–	–	–

Seaworthy Systems, Inc.
MARINE ENGINEERS NAVAL ARCHITECTS
P.O. BOX 965
ESSEX, CT 06426
USA
TEL: 860-767-9061
FAX: 860-767-1263

CHECKED BY	AUTH^D BY	SCALE
JAH 09-30-05	JAH 09-30-05	N.T.S.
DRAWN BY	ORIG^L DATE	
JEK	08-02-05	DIMS IN INCHES UNLESS OTHERWISE STATED

FOR
MAINE STATE FERRY SERVICE
P.O. BOX 645, 517A MAIN STREET
ROCKLAND, ME 04841-0645

TITLE 154' RO/RO/PASS FERRY

NAVIGATION LIGHT ARRANGEMENT

SIZE	DRG No.	REV.	SHEET
D	575-02-422	A	1 OF 1

SSI FILE No. s:\active\projnumb\575-02\575-02-422.dwg

DO NOT SCALE, IF IN DOUBT ASK

REVISIONS

REV.	DATE	DESCRIPTION	SHEET	ZONE	AUTH^{D}
A	01/16/2006	MOVED SPEAKER TO REFLECT CHANGE OF 01 DECK PORT W/C MODS	3	23A	JAH
		REVISED SP SYSTEM, MOVED SP SCHEMATIC TO SHT 2	3	10D	JAH
		ADDED GA CONT. TO ER CONSOLE	4	19B	JAH
		ADDED CAMERAS TO EMBARKATION AREAS	4	19C	JAH
B	–				
C					

GENERAL NOTES:

1. ALL MATERIALS, WORKMANSHIP AND INSTALLATION TO MEET THE REQUIREMENTS OF CFR 46 SUBCHAPTER H AND ABS, AND BE TO THE SATISFACTION OF THE USCG OCMI.

2. POSITION OF EQUIPMENT TO BE CONFIRMED BEFORE INSTALLATION.

3. PHONES, PULL BOXES ETC. SHALL BE LOCATED AT HEIGHTS THAT ARE CONVENIENT FOR OPERATION AND SHALL NOT BE OBSTRUCTED.

4. INTERCONNECTION CABLE AND INSTALLATION METHODS SHALL BE THOSE RECOMMENDED BY THE MANUFACTURER FOR LENGTH, SERVICE AND AMBIENT CONDITIONS.

5. COMMUNICATIONS DEVICES FITTED IN HIGH NOISE AREAS SHALL BE FITTED WITH A VISUAL AND AUDIBLE INDICATING DEVICE.

6. ALL COMMUNICATIONS CIRCUITS SHALL BE THOROUGHLY TESTED FOR GROUNDS AND CONNECTION INTEGRITY PRIOR TO PLACING THE EQUIPMENT IN SERVICE.

7. CABLES SHALL BE RUN AWAY FROM MAIN POWER AND LIGHTING CABLES WHERE APPLICABLE AND PROPERLY SUPPORTED THROUGHOUT THEIR LENGTH.

8. VISUAL INDICATORS AND BEACONS SHALL BE LOCATED SO AS TO PERMIT UNOBSTRUCTED VIEW FROM THE COMPARTMENT THEY SERVE.

STATE OF MAINE
JOHN A. HUNTER
NO. 10737
REGISTERED PROFESSIONAL ENGINEER
10-3-05

A

LEGEND

SYMBOL	EQUIPMENT	QTY	SYMBOL	EQUIPMENT	QTY
	8–STATION SOUND POWERED TELEPHONE	12		GENERAL ALARM 8" W.T. BELL	11
	BLUE ROTATING BEACON	1		GENERAL ALARM MAINTAINED CONTACT PUSHBUTTON	2
	WATERTIGHT LOUDSPEAKER C/W ADJUSTABLE VOLUME CONTROL	14		CCTV CAMERA, FIXED FOCUS, WIDE ANGLE, NON–DIRECTABLE	8
	NWT. CEILING MOUNTED LOUDSPEAKER C/W VOLUME CONTROL	12		CCTV SWITCHER/CONTROL PANEL, WHEELHOUSE CONSOLE MOUNTED	1
	AMPLIFIER AND AUDIO REPRODUCTION EQUIPT. RACK	1		14" TV MONITOR, WHEELHOUSE	1
	HANDHELD MICROPHONE AND STOWAGE BRACKET	2		RED ROTATING BEACON	6

NO.	REFERENCES
5	DC LOAD ANALYSIS
4	AC LOAD ANALYSIS
3	575–02–321 DC SYSTEM ONE LINE DIAGRAM
2	575–02–320 AC SYSTEM ONE LINE DIAGRAM
1	SPECIFICATIONS

APPROVALS:	SUBMIT DATE	APPROVED BY	APPROVED DATE	RE–SUBMIT DATE	APPROVED BY	APPROVED DATE
OWNER	–	–	–	–	–	–
USCG	–	–	–	–	–	–
ABS	–	–	–	–	–	–
USPHS	–	–	–	–	–	–

ITEM	PART CODE	DESCRIPTION	MATERIAL	QTY
14	SP TELEPHONE	HOSE MCCANN SWMLR 8 STATION SP PHONE		1
13	CCTV CAMERA	CLOSED CIRCUIT TV SYS. EXTERIOR CAMERA		7
12	CCTV CAMERA	CLOSED CIRCUIT TV SYS. INTERIOR CAMERA		3
11	CCTV SYS.	CLOSED CIRCUIT TV SYS. W/MONITOR, 12 CAMERAS		–
10	PA SYSTEM	PA SYSTEM, 4 STATION OR COMBINED, 25 W MIN W/MIC		1
9	PA EXT SPKR.	PA SYSTEM EXT. SPEAKER, SURF. MOUNT,, WEATHERPROOF W/VOL. CONT.		14
8	PA INT SPKR.	PA SYSTEM INT. SPEAKER, CEILING MOUNT, W/VOL. CONT.		11
7	BLUE ROT. BEACON	HOSE MCCANN HMC, BLUE, 120 VAC		3
6	RED ROT. BEACON	HOSE MCCANN HMC 870, RED 120 VAC		4
5	GEN. ALARM CONT.	HOSE MCCANN 7316, FLUSH MOUNTED 120 VAC, 15 A		2
4	GEN. ALARM BELL	HOSE MCCANN TYPE 96 BELL, 120 VAC, 8"		11
3	SP TELEPHONE	HOSE MCCANN SW 8 STATION PHONE		1
2	SP TELEPHONE	HOSE MCCANN SER 8 STATION PHONE		5
1	SP TELEPHONE	HOSE MCCANN SE 8 STATION SP PHONE		4

BILL OF MATERIALS

Seaworthy Systems, Inc.
MARINE ENGINEERS NAVAL ARCHITECTS
P.O. BOX 965
ESSEX, CT 06426
USA
TEL: 860–767–9061
FAX: 860–767–1263

FOR
MAINE STATE FERRY SERVICE
P.O. BOX 645, 517A MAIN STREET
ROCKLAND, ME 04841–0645

CHECKED BY	AUTH^{D} BY	SCALE
JAH 09–30–05	JAH 09–30–05	NONE
DRAWN BY JEK	ORIG^{L} DATE 08–05–05	DIMS IN INCHES UNLESS OTHERWISE STATED

TITLE 154' RO/RO/PASS FERRY

INTERNAL COMMUNICATIONS SYSTEM DIAGRAMS

SIZE	DRG No.	REV.	SHEET
D	575–02–431	A	1 OF 3

SSI FILE No. s:\active\projnumb\575–02\575–02–431.dwg

DO NOT SCALE, IF IN DOUBT ASK

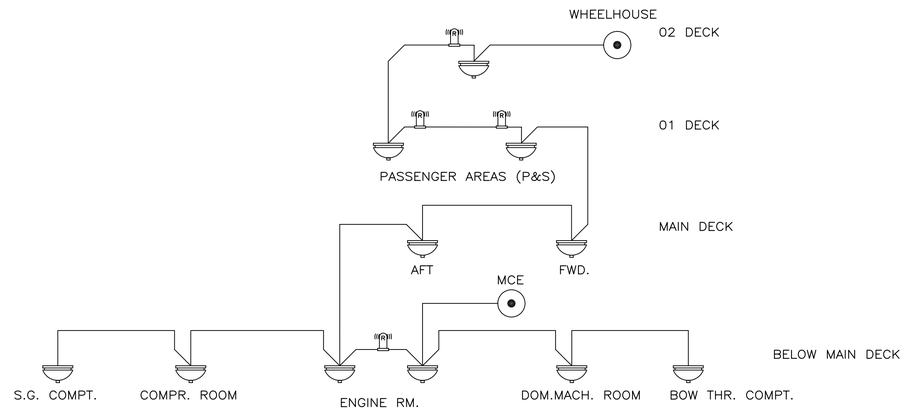

GENERAL ALARM SYSTEM

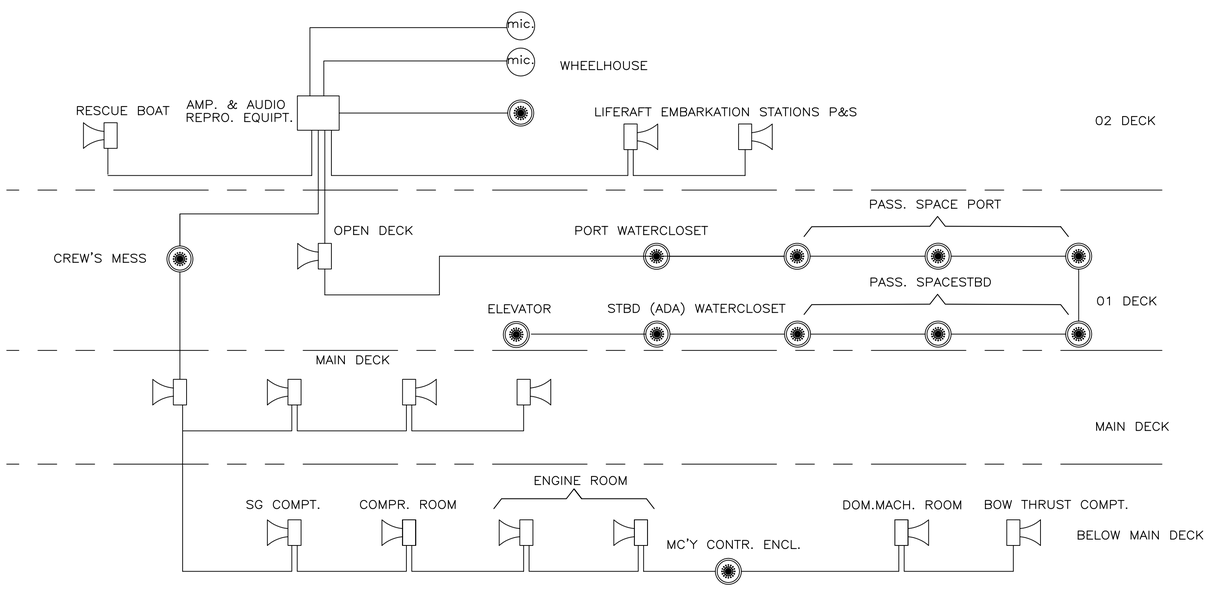

PUBLIC ADDRESS BROADCAST SYSTEM

NOTE: ALL CABLE SHALL BE 2 TWISTED PAIR SHIELDED #16 AWG (1 SPARE PAIR)
EXACT POSITION OF EQUIPMENT SHOWN SHALL BE DETERMINED ON SHIP.
LOUDSPEAKERS ARE GROUPED SO THAT ANNOUNCEMENTS MAY BE MADE IN CREW AREAS ONLY, PASSENGER AREAS ONLY, OR ENTIRE SHIP.
VOLUME CONTROL OF THE LOUDSPEAKERS SHALL BE ADJUSTED TO SUIT LOCAL CONDITIONS AND LOCKED.

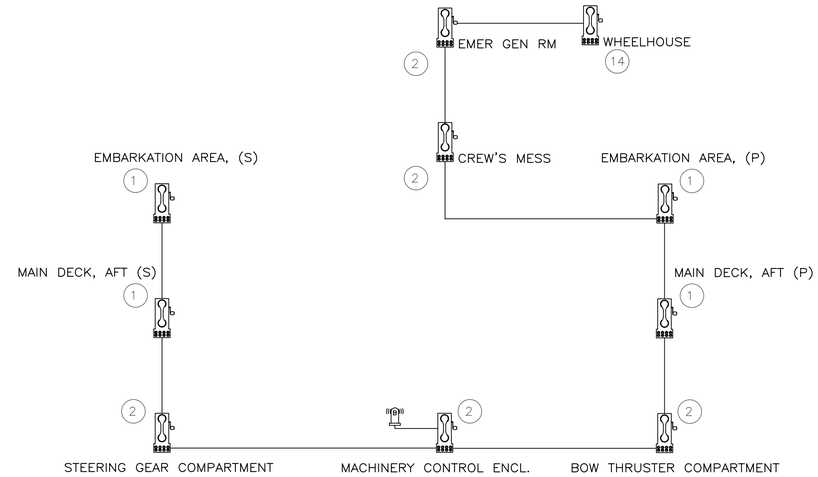

SHIP'S SERVICES SOUND POWERED TELEPHONE SYSTEM

A

NOTE: ALL CABLE SHALL BE 12 COND. #14 AWG (4 SPARE COND.)
POSITION OF EQUIPMENT SHOWN SHALL BE ADJUSTED TO SUIT OPERATOR REQUIREMENTS.

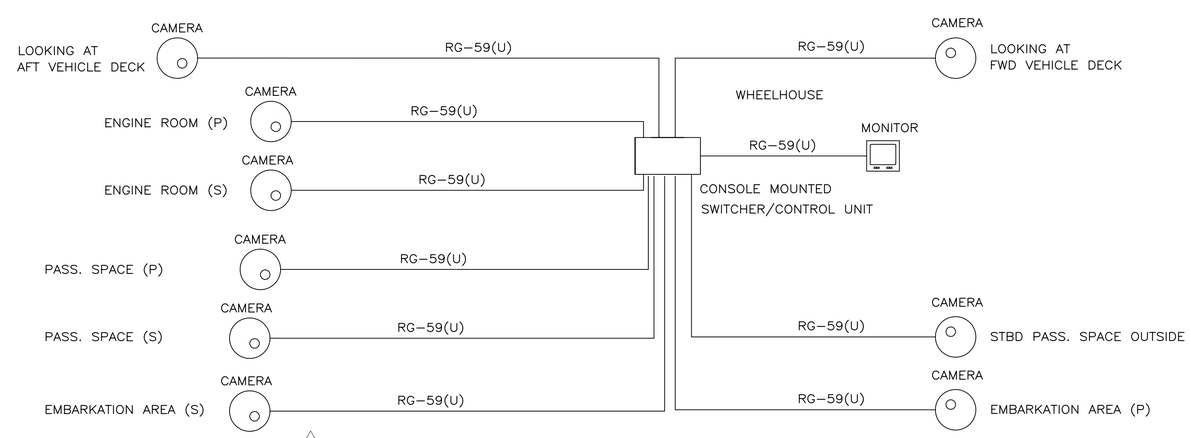

A

CLOSED CIRCUIT TELEVISION SYSTEM

LEGEND

SYMBOL	EQUIPMENT	QTY	SYMBOL	EQUIPMENT	QTY
	8-STATION SOUND POWERED TELEPHONE	12		GENERAL ALARM 8" W.T. BELL	1
	BLUE ROTATING BEACON	1		GENERAL ALARM MAINTAINED CONTACT PUSHBUTTON	2
	WATERTIGHT LOUDSPEAKER C/W ADJUSTABLE VOLUME CONTROL	12		CCTV CAMERA, FIXED FOCUS, WIDE ANGLE, NON-DIRECTABLE	7
	NWT. CEILING MOUNTED LOUDSPEAKER C/W VOLUME CONTROL	10		CCTV SWITCHER/CONTROL PANEL, WHEELHOUSE CONSOLE MOUNTED	1
	AMPLIFIER AND AUDIO REPRODUCTION EQUIPT. RACK	1		14" TV MONITOR, WHEELHOUSE	1
mic	HANDHELD MICROPHONE AND STOWAGE BRACKET	2		RED ROTATING BEACON	6

USPHS

Seaworthy Systems, Inc.
MARINE ENGINEERS NAVAL ARCHITECTS
P.O. BOX 965
ESSEX, CT 06426
USA
TEL: 860-767-9061
FAX: 860-767-1263

SCALE N.T.S.

DIMS IN INCHES UNLESS OTHERWISE STATED

FOR
MAINE STATE FERRY SERVICE
P.O. BOX 645, 517A MAIN STREET
ROCKLAND, ME 04841-0645

TITLE 154' RO/RO/PASS FERRY

INTERNAL COMMUNICATIONS SYSTEM DIAGRAMS

SIZE D | DRG No. 575-02-431 | REV. A | SHEET 2 OF 3

SSI FILE No. s:\active\projnumb\575-02\575-02-431.dwg

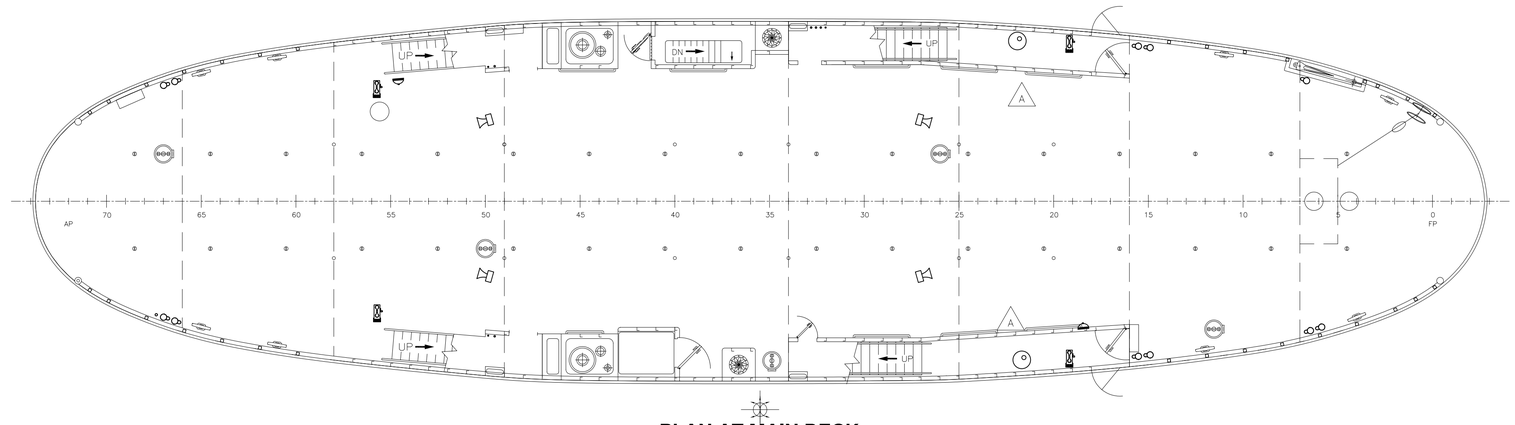

PLAN AT MAIN DECK

N.T.S.

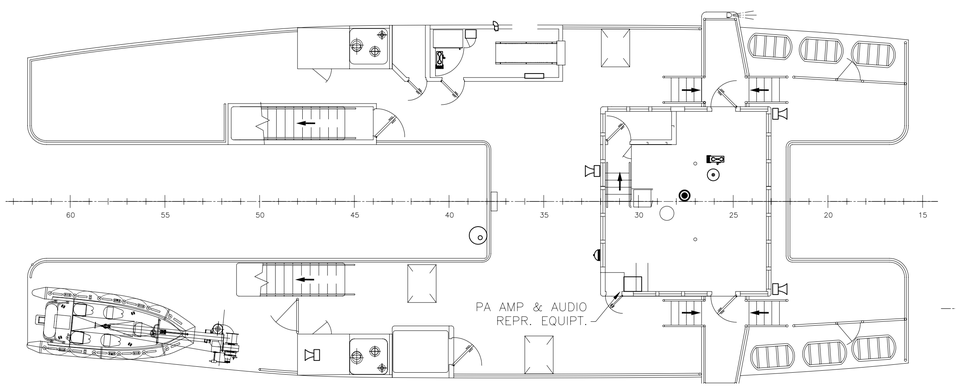

PLAN AT 02 DECK

N.T.S.

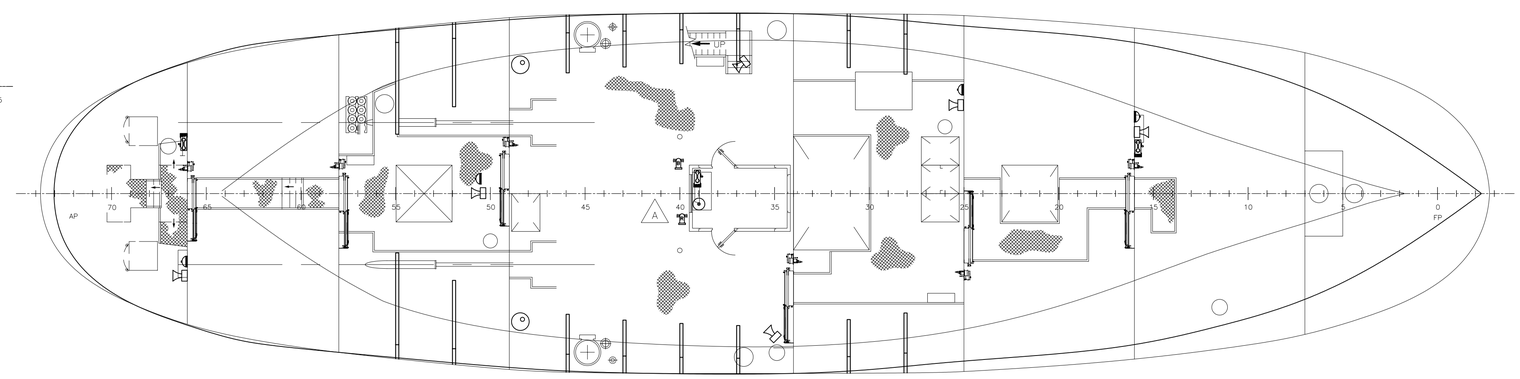

PLAN BELOW MAIN DECK

N.T.S.

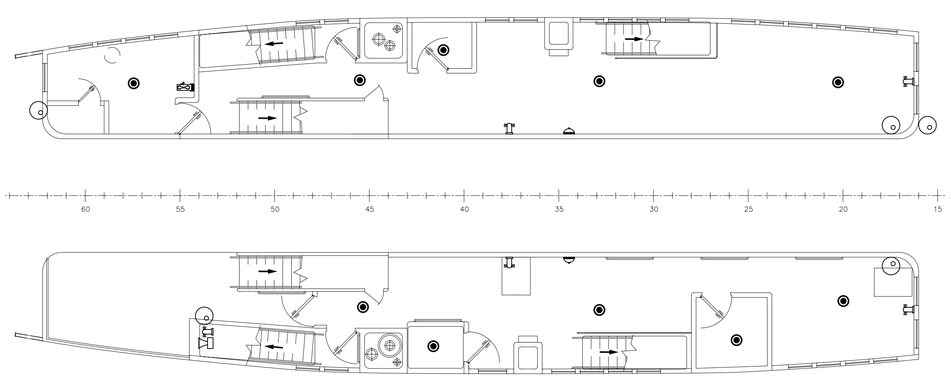

PLAN AT 01 DECK

N.T.S.

LEGEND

SYMBOL	EQUIPMENT	QTY	SYMBOL	EQUIPMENT	QTY
	8-STATION SOUND POWERED TELEPHONE	12		GENERAL ALARM 8" W.T. BELL	1
	BLUE ROTATING BEACON	1		GENERAL ALARM MAINTAINED CONTACT PUSHBUTTON	2
	WATERTIGHT LOUDSPEAKER C/W ADJUSTABLE VOLUME CONTROL	12		CCTV CAMERA, FIXED FOCUS, WIDE ANGLE, NON-DIRECTABLE	7
	NWT. CEILING MOUNTED LOUDSPEAKER C/W VOLUME CONTROL	10		CCTV SWITCHER/CONTROL PANEL, WHEELHOUSE CONSOLE MOUNTED	1
	AMPLIFIER AND AUDIO REPRODUCTION EQUIPT. RACK	1		14" TV MONITOR, WHEELHOUSE	1
mic	HANDHELD MICROPHONE AND STOWAGE BRACKET	2		RED ROTATING BEACON	6

Seaworthy Systems, Inc.
MARINE ENGINEERS NAVAL ARCHITECTS
P.O. BOX 965
ESSEX, CT 06426
USA
TEL: 860-767-9061
FAX: 860-767-1263

FOR
MAINE STATE FERRY SERVICE
P.O. BOX 645, 517A MAIN STREET
ROCKLAND, ME 04841-0645

TITLE 154' RO/RO/PASS FERRY

INTERNAL COMMUNICATIONS SYSTEM DIAGRAMS

SCALE N.T.S.

DIMS IN INCHES UNLESS OTHERWISE STATED

SIZE D | DRG No. 575-02-431 | REV. A | SHEET 3 OF 3

SSI FILE No. s:\active\projnumb\575-02\575-02-431.dwg

575-02-431

DO NOT SCALE, IF IN DOUBT ASK

REVISIONS					
REV.	DATE	DESCRIPTION	SHEET	ZONE	AUTH.
A	–	–			
B	–	–			
C	–	–			
D	–	–			

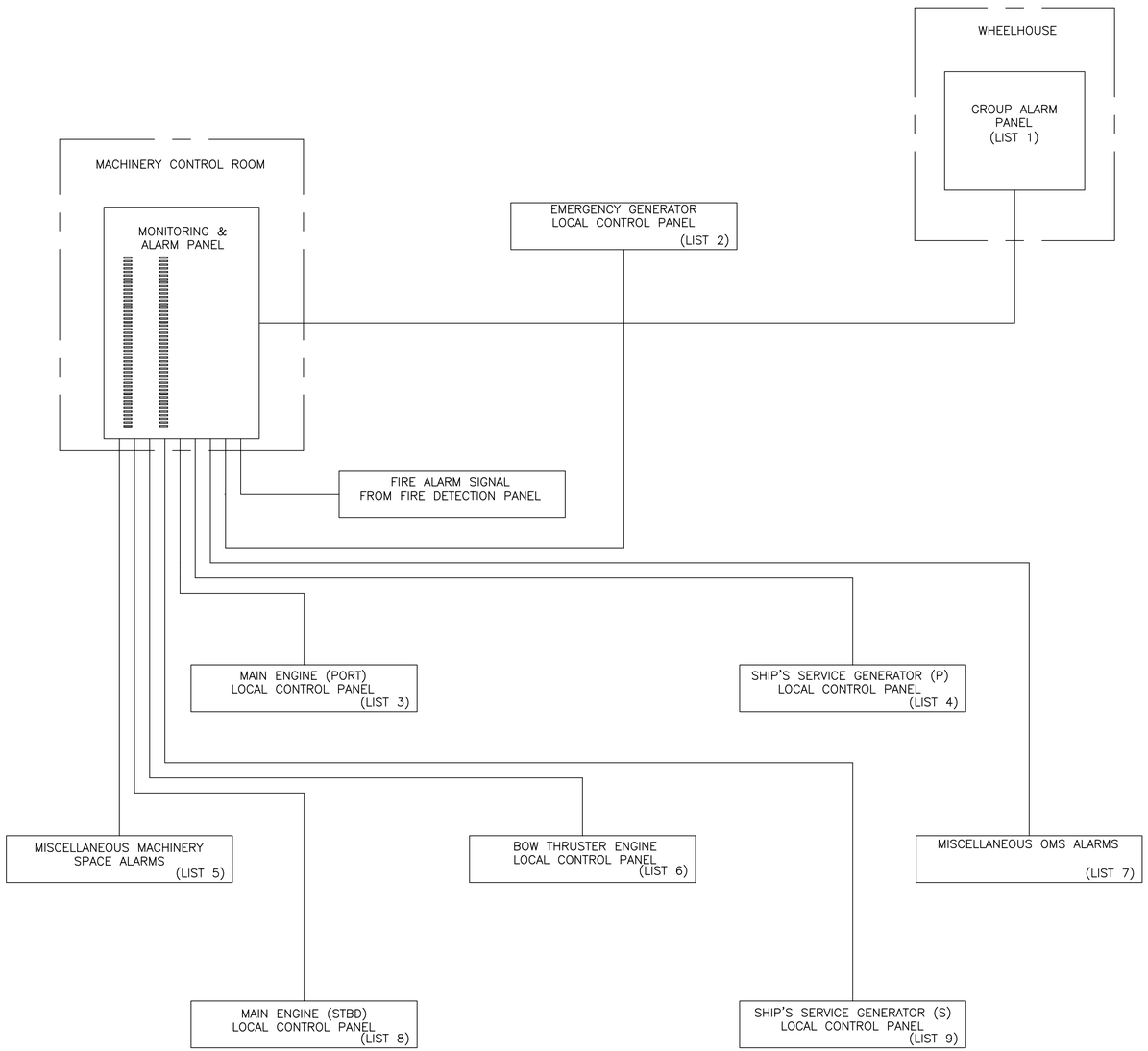

GENERAL NOTES:

1. ALL MATERIALS, WORKMANSHIP AND INSTALLATION TO MEET THE REQUIREMENTS OF CFR 46 SUBCHAPTER H AND ABS, AND BE TO THE SATISFACTION OF THE USCG OCMI.

2. ALL SIGNAL CABLING SHALL BE MULTIPAIRED TWISTED #16 AWG.

3. ALARM POINTS SHALL BE AS LISTED ON DOCUMENT "CENTRAL ALARM SYSTEM – ALARM POINTS LIST," SSI NO. 575–02–436(DOC).

4. THE CENTRAL ALARM PANEL SHALL HAVE THE FOLLOWING FEATURES:
   HANDLE ANY COMBINATION OF ANALOG AND DIGITAL INPUTS
   EACH INPUT BE OPTICALLY ISOLATED
   INDUSTRY STANDARD INPUTS FROM NC, NO CONTACTS, RTD'S, THERMOCOUPLES, VOLTAGES OF 12, 24, 120, 240 AC OR DC ETC.
   DISABLE/ENABLE POINTS BASED ON MACHINERY STATUS
   BUILT IN AUDIBLE DEVICE
   INDIVIDUAL ENGRAVED DISPLAY WINDOWS FOR EACH POINT
   MENU DRIVEN PROGRAMMING VIA A MEMBRANE KEYPAD
   PASSWORD PROTECTED SETUP AND NONVOLATILE MEMORY
   SELF DIAGNOSTICS

5. THE GROUP ALARM PANEL SHALL CONSIST OF ENGRAVED DISPLAY WINDOWS FOR EACH GROUP OF ALARMS AS SHOWN IN LIST 1 OF THE ALARM POINTS LIST.

6. OPERATION OF THE SYSTEM SHALL BE AS FOLLOWS:

   ON RECEIPT OF AN ALARM SIGNAL, THE ALARM PANEL'S BUILT IN HORN WILL SOUND AND THE APPROPRIATE DISPLAY WINDOW WILL FLASH RED. THIS WILL BE REPEATED AT THE GROUP ALARM PANEL, AUDIBLY AND VISUALLY.

   BY MEANS OF A PUSHBUTTON ON THE FRONT OF THE ALARM PANEL THE MACHINERY CONTROL ROOM BASED OPERATOR MAY SILENCE THE AUDIBLE. THE DISPLAY WINDOW WILL SHOW STEADY RE AND BOTH OF THESE FUNCTIONS WILL BE REPEATED AT THE GROUP ALARM PANEL. NOT UNTIL THE ALARM CONDITION HAS BEEN RECTIFIED WILL THE DISPLAY WINDOWS BE EXTINGUISHED.

7. THE SYSTEM WILL BE POWERED BY DOUBLE REDUNDANT, BATTERY MAINTAINED DC POWER SUPPLIES.

8. THE MONITORING AND ALARM PANEL WILL BE A PROPRIETARY MARINE ALARM PANEL, APPROVED BY USCG AND THE CLASSIFICATION SOCIETIES.

STATE OF MAINE
JOHN A. HUNTER
NO. 10737
REGISTERED PROFESSIONAL ENGINEER
10-3-05

ITEM	PART CODE	DESCRIPTION	MATERIAL	QTY
5	–	–	–	–
4	–	–	–	–
3	FIRE/BILGE PUMP	164 GPM, 210' HEAD	NIAL BRONZE CASING & IMPELLER, STAINLESS SHAFT	1
2	MACH'Y SPACE AUTOMATIC DRAINAGE PUMP	15 GPM AT 20 PSI	NIAL BRONZE CASING & IMPELLER, STAINLESS SHAFT	1
1	BILGE PUMP	137 GPM, 40' HEAD	NIAL BRONZE CASING & IMPELLER, STAINLESS SHAFT	1

BILL OF MATERIALS

NO.	REFERENCES
3	–
2	–
1	–

APPROVALS:	SUBMIT DATE	APPROVED BY	APPROVED DATE	RE–SUBMIT DATE	APPROVED BY	APPROVED DATE
OWNER	–	–	–	–	–	–
USCG	–	–	–	–	–	–
ABS	–	–	–	–	–	–
USPHS	–	–	–	–	–	–

Seaworthy Systems, Inc.
MARINE ENGINEERS NAVAL ARCHITECTS
P.O. BOX 965
ESSEX, CT 06426
USA
TEL: 860–767–9061
FAX: 860–767–1263

FOR
MAINE STATE FERRY SERVICE
P.O. BOX 645, 517A MAIN STREET
ROCKLAND, ME 04841–0645

CHECKED BY	AUTH'D BY	SCALE
JAH 09–30–05	JAH 09–30–05	NONE
DRAWN BY	ORIG'L DATE	DIMS IN INCHES UNLESS OTHERWISE STATED
JEK	08–03–05	

TITLE 154' RO/RO/PASS FERRY

ALARM SYSTEM DIAGRAM

SIZE	DRG No.	REV.	SHEET
D	575–02–436	–	1 OF 1

SSI FILE No. s:\active\projnumb\575–02\575–02–436.dwg

MATERIAL SCHEDULE

SERVICE	DESIGN TEMP & PRESSURE	SIZE	PIPE	TAKEDOWN JOINTS				FITTINGS	VALVES	
				MATERIAL	GASKETS	BOLTS	NUTS		BODY	TRIM
VENTS, FILLS	100° F, 15 PSIG	ALL	GALVANIZED SMLS OR E.R.W. CARBON STL., ASTM A106 GR B OR A53 BG B TY S OR E	FLANGES: S.W. OR SLIP ON, GALVANIZED ASTM A105 UNIONS: S.W., GALVANIZED ASTM A105	1/16" THK FULL-FACE NON-ASBESTOS W/ NITRILE BINDER	CARBON STL., ASTM A307 GR B	CARBON STL., ASTM A563 GR A	BUTTWELD, CARBON STL., ASTM A234 GR WPB S.W., CARBON STL., ASTM A234 GR WPB OR A105	FLGD, D.I. ASTM A 395	S.S. OR BRONZE

SYMBOLS LIST

SYMBOL	DESCRIPTION	SYMBOL	DESCRIPTION
	PIPING		BUTTERFLY VALVE, WAFER TYPE
	GATE VALVE		ANGLE VALVE, STOP CHECK
	GLOBE VALVE		VENT
	BALL VALVE		SUCTION STRAINER
	HORIZ SWING CHECK VALVE		FILTER
	GLOBE STOP CHECK VALVE		FLEXIBLE CONNECTION
	COENCENTRIC REDUCER		GATE VALVE, WITH REMOTER OPERATOR
	Y STRAINER		
	FLANGED JOINT		SIMPLEX STRAINER
	BUTTERFLY VALVE, MANUALLY OPERATED		DUPLEX STRAINER
	DECK DRAIN, PLAN VIEW		DECK DRAIN, SECTION VIEW
	PIPE, TURNING UP OR TOWARD		PIPE, TURNING DOWN OR AWAY
	VOID VENT & GOOSENECK WITHOUT FLOAT BALL CHECK VALVE		VOID VENT & GOOSENECK WITH FLOAT BALL CHECK VALVE

REVISIONS

REV.	DATE	DESCRIPTION	SHEET	ZONE	AUTHP
A	–	–			
B	–	–			
C	–	–			
D	–	–			

GENERAL NOTES:

1. ALL MATERIALS, WORKMANSHIP AND INSTALLATION TO MEET THE REQUIREMENTS OF CFR 46 SUBCHAPTER H AND ABS, AND BE TO THE SATISFACTION OF THE USCG OCMI.

2. HULL PIPE PENETRATION AND ADJOINING VALVES SHALL BE IN ACCORDANCE WITH REGULATORY REQUIREMENTS.

3. PIPE JOINTS SHALL BE PROVIDED FOR EASE OF REMOVAL OF PIPES, VALVES AND EQUIPMENT TO THE DISCRETION OF THE OWNER'S REPRESENTATIVE.

4. CLEAN OUTS TO BE POSITIONED IN ACCESSIBLE LOCATION ON ALL GRAVITY HEADERS AND RISERS.

5. PIPING PASSING THROUGH OIL OR WATERTIGHT BOUNDARIES SHALL BE FITTED WITH SLEEVES WELDED TO THE BOUNDARY AND THE PIPING.

6. HANGERS SHALL BE PROVIDED TO SUPPORT THE PIPING. HANGER LOCATION S SHALL BE CHOSEN TO PREVENT VISIBLE PIPE VIBRATION.

7. POTABLE WATER SYSTEM TO MEET THE REQUIREMENTS OF THE USPHS.

8. ALL DECK FILLS AND DISCHARGES TO HAVE REQUIRED VOLUME "SAVE-ALLS."

ABBREVIATIONS

C.S.	CAST STEEL
D.I.	DUCTILE IRON
E.R.W.	ELECTRIC RESISTANCE WELDED
FGD.	FORGED
FLGD.	FLANGED
F.S.	FORGED STEEL
SCH.	SCHEDULE
SCRD.	SCREWED
SMLS.	SEAMLESS
S.S.	STAINLESS STEEL

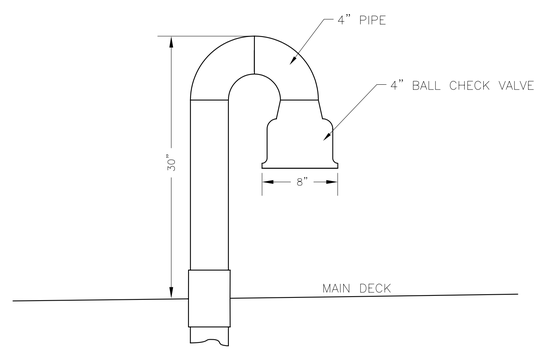

DETAIL A
TYPICAL VOID VENT
N.T.S.

STATE OF MAINE
JOHN A. HUNTER
NO. 10737
REGISTERED PROFESSIONAL ENGINEER
10-3-05

ITEM	PART CODE	DESCRIPTION	MATERIAL	QTY
5	–	–	–	–
4	–	–	–	–
3	–	–	–	–
2	TLI (2)	GEMS SURESITE LEVEL IND.	–	5
1	TLI (1)	KING PNEUMATIC LEVEL IND.	–	2

BILL OF MATERIALS

NO.	REFERENCES
3	–
2	–
1	–

APPROVALS:	SUBMIT DATE	APPROVED BY	APPROVED DATE	RE-SUBMIT DATE	APPROVED BY	APPROVED DATE
OWNER	–	–	–	–	–	–
USCG	–	–	–	–	–	–
ABS	–	–	–	–	–	–
USPHS	–	–	–	–	–	–

Seaworthy Systems, Inc.
MARINE ENGINEERS NAVAL ARCHITECTS
P.O. BOX 965
ESSEX, CT 06426
USA
TEL: 860-767-9061
FAX: 860-767-1263

FOR
MAINE STATE FERRY SERVICE
P.O. BOX 645, 517A MAIN STREET
ROCKLAND, ME 04681-0645

CHECKED BY	AUTH° BY	SCALE
JAH 09-30-05	JAH 09-30-05	NONE
DRAWN BY JEK	ORIG° DATE 08-01-05	DIMS IN INCHES UNLESS OTHERWISE STATED

TITLE 154' RO/RO/PASS FERRY
VENTS & FILLS
SYSTEM DIAGRAM

SIZE	DRG No.	REV.	SHEET
D	575-02-506	–	1 OF 3

SSI FILE No. s:\active\projnumb\575-02\575-02-506.dwg

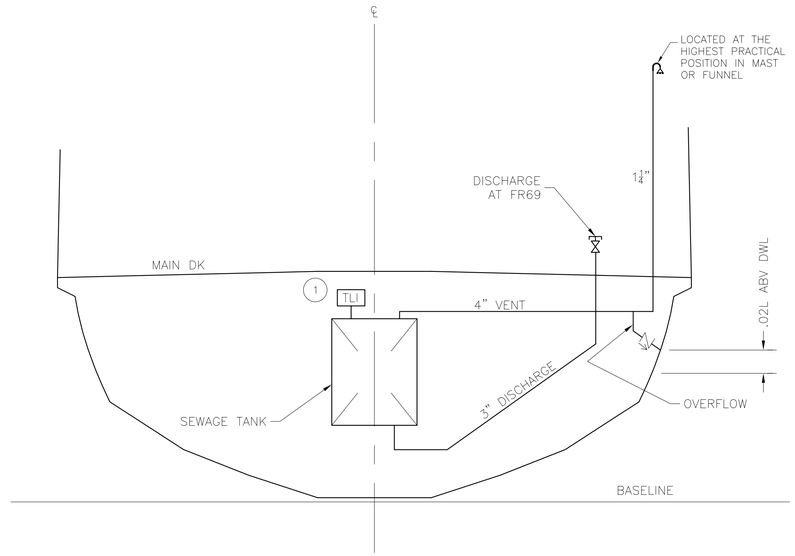

SECTION AT FR 21

LKG FWD

SCALE: 3/16 IN = 1 FT

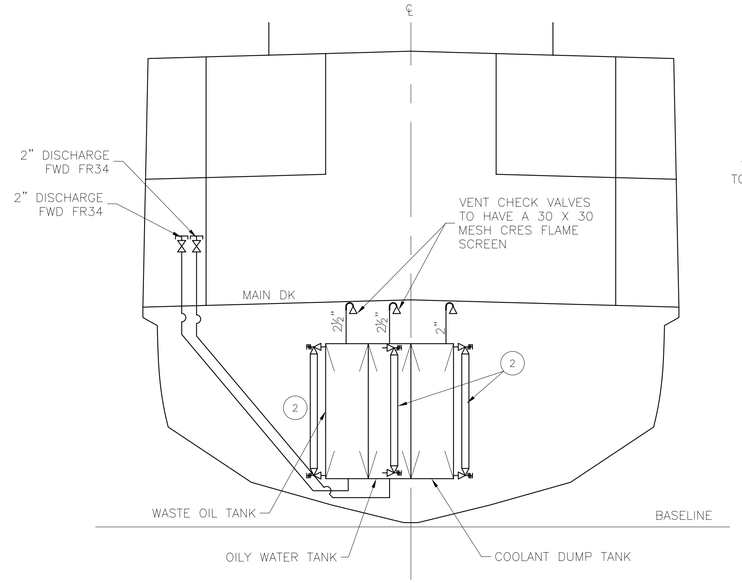

SECTION AT FR 26

LKG FWD

SCALE: 3/16 IN = 1 FT

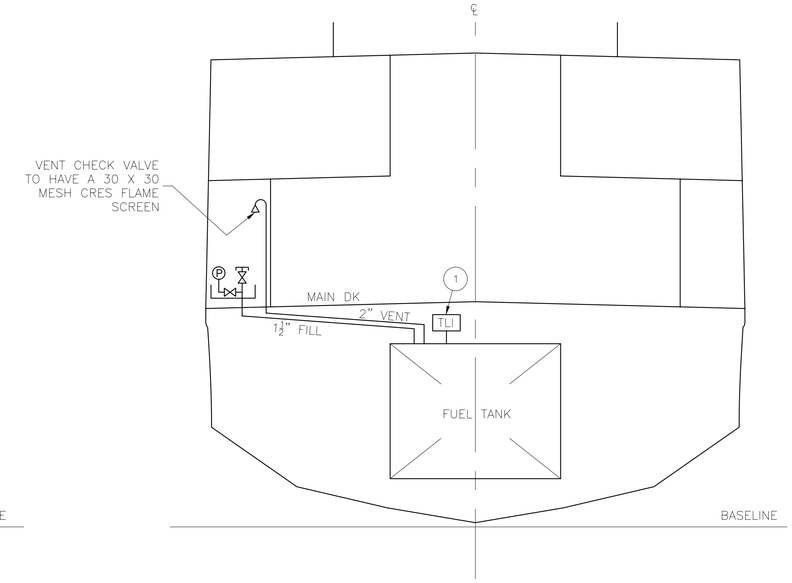

SECTION AT FR 32

LKG FWD

SCALE: 3/16 IN = 1 FT

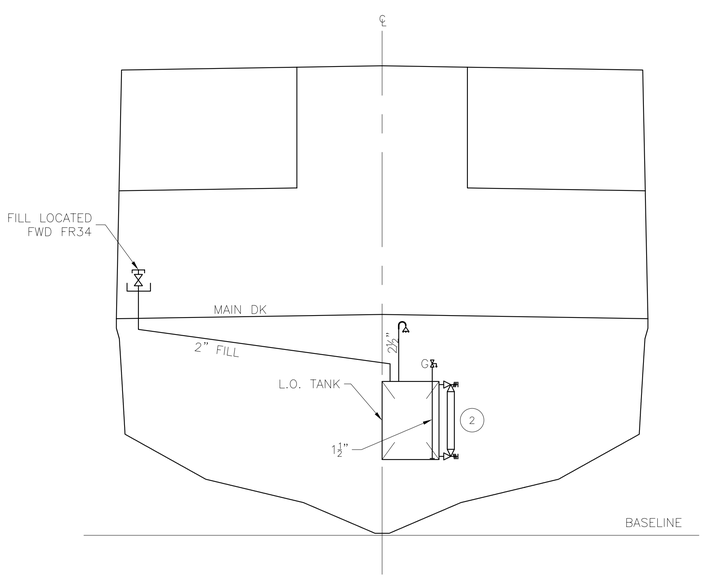

SECTION AT FR 48

LKG FWD

SCALE: 3/16 IN = 1 FT

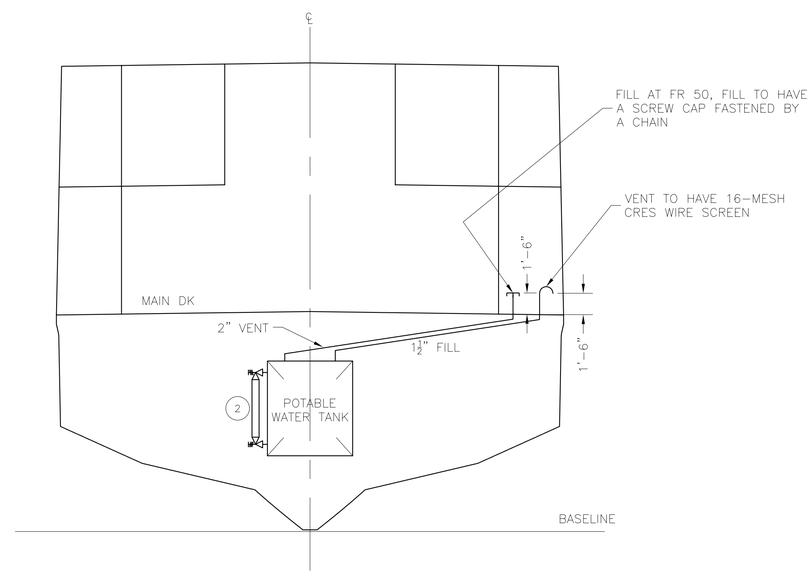

SECTION AT FR 53

LKG FWD

SCALE: 3/16 IN = 1 FT

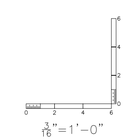

Seaworthy Systems, Inc.

MARINE ENGINEERS NAVAL ARCHITECTS

P.O. BOX 965
ESSEX, CT 06426
USA
TEL: 860-767-9061
FAX: 860-767-1263

FOR

MAINE STATE FERRY SERVICE
P.O. BOX 645, 517A MAIN STREET
ROCKLAND, ME 04681-0645

TITLE 154' RO/RO/PASS FERRY

VENTS & FILLS
SYSTEM DIAGRAM

SCALE		SIZE	DRG No.	REV.	SHEET
NONE	DIMS IN INCHES UNLESS OTHERWISE STATED	D	575-02-506	—	2 OF 3

SSI FILE No. s:\active\projnumb\575-02\575-02-506.dwg

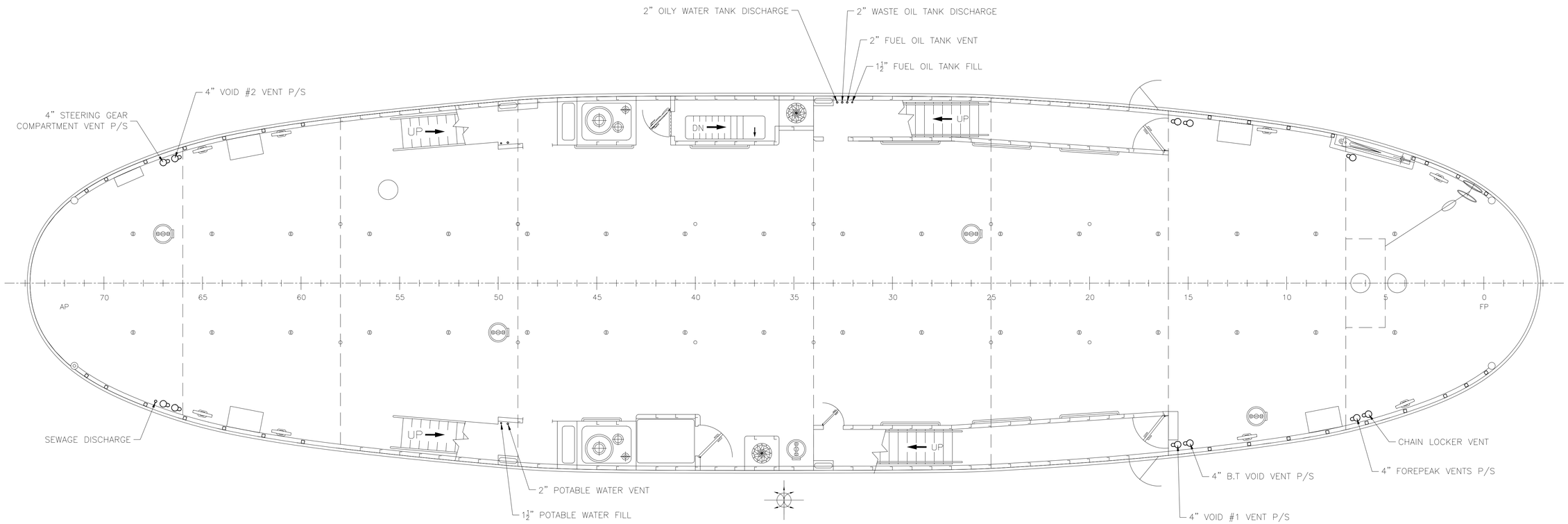

PLAN VIEW MAIN DECK

VOID VENT LOCATIONS

SCALE: 3/16" = 1' - 0"

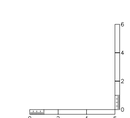

Seaworthy Systems, Inc.
MARINE ENGINEERS NAVAL ARCHITECTS
P.O. BOX 965
ESSEX, CT 06426
USA
TEL: 860-767-9061
FAX: 860-767-1263

FOR

MAINE STATE FERRY SERVICE
P.O. BOX 645, 517A MAIN STREET
ROCKLAND, ME 04681-0645

TITLE 154' RO/RO/PASS FERRY

VENTS & FILLS
SYSTEM DIAGRAM

SCALE	DIMS IN INCHES UNLESS OTHERWISE STATED
NONE	

SIZE	DRG No.	REV.	SHEET
D	575-02-506	—	3 OF 3

SSI FILE No. s:\active\projnumb\575-02\575-02-506.dwg

DO NOT SCALE, IF IN DOUBT ASK

REVISIONS					
REV.	DATE	DESCRIPTION	SHEET	ZONE	AUTH^{R}
A	–	–			
B	–	–			
C	–	–			
D	–	–			

GENERAL NOTES:

1. ALL MATERIALS, WORKMANSHIP AND INSTALLATION TO MEET THE REQUIREMENTS OF CFR 46 SUBCHAPTER H AND ABS, AND BE TO THE SATISFACTION OF THE USCG OCMI.

2. ALL WEATHER DECK VENTILATION INLET AND OUTLET TERMINALS SHALL BE PROVIDED WITH BIRD SCREENS AND WEATHER PROOF CLOSURES.

3. NOMINAL DISTRIBUTION DUCT VELOCITY: NOMINAL 1500 FPM. INLET LOUVER VELOCITY: 400 FPM.

5. DESIGN BASED ON AVAILABLE DATA. FINAL DESIGN PENDING CERTIFIED VENDOR INFORMATION.

6. 6. GENERAL REQUIREMENTS FOR EXHAUST SHEET STEEL EXHAUST DUCTS:

A. ALL SHEET METAL DUCT PIPING AND FITTINGS ARE NOT TO BE LESS THAN USSG 18 GAGE.

B. DUCT WORK AND FITTINGS TO BE GALVANIZED STEEL "INDUSTRIAL CLAMP TOGETHER" OR "QUICK–FIT" SYSTEMS. CLAMPS ARE TO BE STAINLESS STEEL (S.S.).

C. A SUFFICIENT NUMBER OF JOINTS ARE TO BE USED IN ORDER TO MAKE THE DUCTS PORTABLE IWO MACHINERY, EQUIPMENT AND FITTINGS THAT REQUIRE DISMANTLING FOR PERIODIC OVERHAUL AND WHENEVER NECESSARY FOR ACCESS TO OTHER PIPING SYSTEMS, ELECTRICAL SYSTEMS AND FITTINGS.

D. HANGERS SHALL BE FITTED FOR PROPER SUPPORT OF ALL DUCTWORK AND TERMINALS, 8'–0" MAXIMUM SPACING.

7. ENGINE ROOM FIRE DAMPERS TO BE PNEUMATICALLY OPERATED AND CONTROLLED FROM EMERGENCY STATION IN PILOTHOUSE. AMR FIRE DAMPERS TO BE MANUALLY OPERATABLE ABOVE MAIN DECK.

8. ALL VENTILATION FANS SHALL BE INTERFACED WITH EMERGENCY VENTILATION STOP LOCATED AT EMERGENCY STATION IN PILOTHOUSE.

9. ALL FIRE DAMPERS TO BE CONSTRUCTED IN ACCORDANCE WITH CFR 46 SUBCHAPTER H AND OF CORROSION RESISTANT MATERIALS.

10. ABRUPT CHANGES BETWEEN DUCTS OF DIFFERENT AREAS SHALL BE AVOIDED. RADII OF ALL BENDS SHALL BE THE GREATEST AVAILABLE WITH DUE CONSIDERATION FOR STRUCTURE AND EQUIPMENT OBSTACLES.

11. ALL FIRE DAMPERS TO HAVE OPEN/CLOSE POSITION INDICATORS READILY OBSERVABLE.

STATE OF MAINE
JOHN A. HUNTER
NO. 10737
REGISTERED PROFESSIONAL ENGINEER
10-3-05

ITEM	PART CODE	DESCRIPTION	MATERIAL	QTY
7	FIRE DAMPER	MANUAL 6" FIRE DAMPER	– –	2
6	VOLUME CONTROL	TBD	– –	10
5	PACKAGE AIR COND.	TBD	– –	1
4	FIRE DAMPER	GREENHECK 12" x 12" A60 RATED FIRE DAMPER, PNEUMATIC OPERATION	– –	2
3	FIRE DAMPER	GREENHECK 32" x 32" A60 RATED FIRE DAMPER, PNEUMATIC OPERATION	–	4
2	AMR EXHAUST FAN	12" VANEAXIAL FAN, 1200 CFM @ 1" WC, 240V, 3 PHASE	–	2
1	ER VENT FAN	GREENHECK 24", 2 SPD, VANEAXIAL FAN 9000 CFM @ 1" WC, 5 HP, 240V, 3 PHASE	–	2

BILL OF MATERIALS

NO.	REFERENCES
3	–
2	–
1	575–02–321 ONE LINE DIAGRAM OF AC ELECTRICAL SYSTEM

APPROVALS:	SUBMIT DATE	APPROVED BY	APPROVED DATE	RE–SUBMIT DATE	APPROVED BY	APPROVED DATE
OWNER	–	–	–	–	–	–
USCG	–	–	–	–	–	–
ABS	–	–	–	–	–	–
USPHS	–	–	–	–	–	–

Seaworthy Systems, Inc.
MAINE ENGINEERS NAVAL ARCHITECTS
P.O. BOX 965
ESSEX, CT 06426
USA
TEL: 860–767–9061
FAX: 860–767–1263

FOR
MAINE STATE FERRY SERVICE
P.O. BOX 645, 517A MAIN STREET
ROCKLAND, ME 04841–0645

CHECKED BY	AUTH^{R} BY	SCALE
JAH 09–30–05	JAH 09–30–05	AS STATED
DRAWN BY	ORIG^{L} DATE	
ERS	9–29–05	DIMS IN INCHES UNLESS OTHERWISE STATED

TITLE 154' RO/RO/PASS FERRY

ER VENTILATION

SIZE	DRG No.	REV.	SHEET
D	575–02–510	–	1 OF 2

SSI FILE No. s:\active\projnumb\575–02\drafting\active\575–02–510.dwg

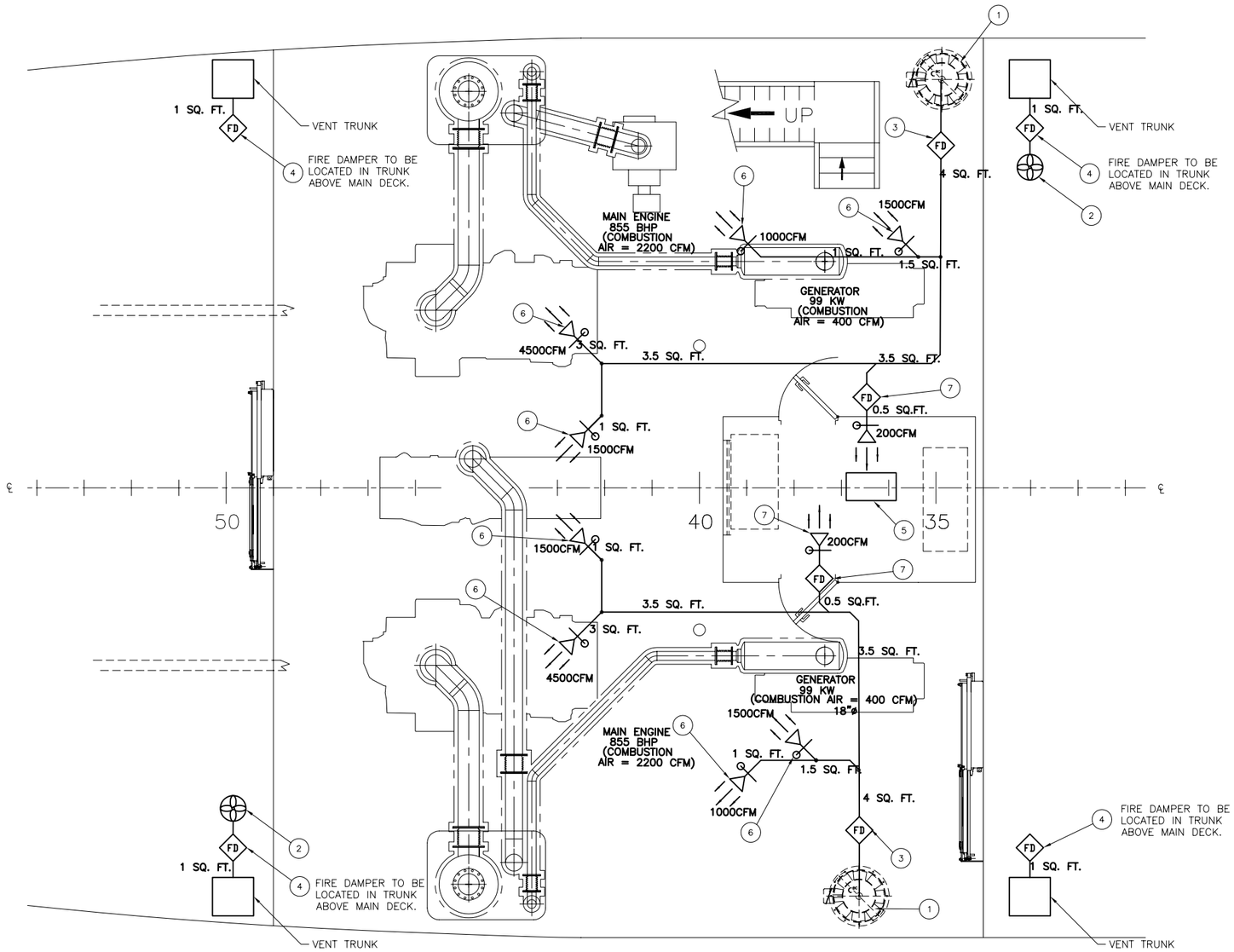

PLAN VIEW BELOW MAIN DECK

ENGINE ROOM EQUIPMENT LAYOUT

SCALE: 3/8 IN = 1 FT

FWD

3/8"=1'-0"

Seaworthy Systems, Inc.
MARINE ENGINEERS NAVAL ARCHITECTS
P.O. BOX 965
ESSEX, CT 06426
USA
TEL: 860-767-9061
FAX: 860-767-1263

FOR
MAINE STATE FERRY SERVICE
P.O. BOX 645 517A MAIN ST
ROCKLAND, ME 04841-0645

TITLE 154' RO/RO/PASS FERRY

ER VENTILATION

SCALE		SIZE	DRG No.	REV.	SHEET
AS STATED	DIMS IN INCHES UNLESS OTHERWISE STATED	D	575-02-510	—	2 OF 2

SSI FILE No. s:\active\projnumb\575-02\575-02-510.dwg

MATERIAL SCHEDULE

SERVICE	DESIGN TEMP & PRESSURE	SIZE	PIPE	TAKEDOWN JOINTS MATERIAL	TAKEDOWN JOINTS GASKETS	TAKEDOWN JOINTS BOLTS	TAKEDOWN JOINTS NUTS	FITTINGS	VALVES BODY	VALVES TRIM
HOT WATER	200° F 100 PSIG OPERATING PRESSURE: 35 PSIG	1" AND UNDER	SMLS. COPPER, ASTM B 88 TY K	FLANGES: SILBRAZE , BRONZE ASME SB62 UNIONS: BRAZED OR SCRD, BRONZE ASME SB61 OR SB62	1/16" THK FULL–FACE NON–ASBESTOS W/ NITRILE BINDER	CARBON STL., ASTM A307 GR B	CARBON STL., ASTM A563 GR A	SILBRAZE, COPPER ASME SB88 TY K	FLGD OR BRAZED, BRONZE ASME SB61 OR SB62 BUTTERFLY WAFER, D.I. ASTM A395	S.S. OR BRONZE
		OVER 1"	SMLS OR WELDED COPPER NICKEL ALLOY 90:10, ASME SB466 OR SB467							

DO NOT SCALE, IF IN DOUBT ASK

REVISIONS

REV.	DATE	DESCRIPTION	SHEET	ZONE	AUTH.
A	–	–			
B	–	–			
C	–	–			
D	–	–			

GENERAL NOTES:

1. ALL MATERIALS, WORKMANSHIP AND INSTALLATION TO MEET THE REQUIREMENTS OF CFR 46 SUBCHAPTER H AND ABS, AND BE TO THE SATISFACTION OF THE USCG OCMI.

2. ALL VALVES, COCKS AND CONNECTIONS SHALL BE READILY ACCESSIBLE FOR MAINTENANCE AND OPERATION. PIPE RUNS SHALL BE DESIGNED FOR EASY REMOVAL.

3. SYSTEM TO BE FILLED WITH PROPYLENE GLYCOL SOLUTION TO PROVIDE FREEZE PROTECTION TO –10 F.

4. PIPE JOINTS SHALL BE PROVIDED FOR EASE OF REMOVAL OF PIPES, VALVES AND EQUIPMENT TO THE DISCRETION OF THE OWNER'S REPRESENTATIVE.

5. PIPING PASSING THROUGH OIL OR WATERTIGHT BOUNDARIES SHALL BE FITTED WITH SLEEVES WELDED TO THE BOUNDARY AND THE PIPING.

6. HANGERS SHALL BE PROVIDED TO SUPPORT THE PIPING. HANGER LOCATIONS SHALL BE CHOSEN TO PREVENT VISIBLE PIPE VIBRATION.

7. TAKEDOWN JOINTS SHALL BE PROVIDED WHERE NECESSARY FOR REMOVAL AND SERVICE OF EQUIPMENT.

8. VENT LINES SHALL BE INSTALLED TO ENSURE CONTINUOUS DRAINAGE.

9. COMMON DRAINS & VENTS BELOW MAIN DECK MUST BE SO ARRANGED TO PREVENT PROGRESSIVE FLOODING BETWEEN WATERTIGHT COMPARTMENTS.

10. TOTAL QUANTITY AND CONFIGURATION OF BASEBOARD HEATERS WILL BE SUBJECT TO FINAL VENDOR INFORMATION AND PLACEMENT IN SPACE.

11. PIPE SIZES SUBJECT TO FINAL SELECTION OF HOT WATER BOILER AND PUMPS.

SYMBOL LEGEND

	SCREW–DOWN GLOBE VALVE	F	FREEZE–STAT
	SWING CHECK VALVE		CENTRIFUGAL PUMP
	BALL VALVE		THERMOSTATIC–CONTROLLED ELECTRIC HEATER
	GATE VALVE		THERMOSTATIC–CONTROLLED H.W. BASEBOARD HEATER
	ANGLE RELIEF VALVE		H.W. UNIT HEATER
T	THERMOSTAT		DUCT HEATER
V	VACUUM GAUGE		ITEM SUPPLIED W/PRINCIPAL COMPONENT
P	PRESSURE GAUGE	3/4"	LINE SIZE

SPACE HEATING REQUIREMENTS

SPACE	HEATING REQUIREMENT	TYPE
BOW THRUSTER RM.	5 kWe	ELECTRIC UNIT HEATER
AMR–1	45,000 BTU/HR	HYDRONIC UNIT HEATER
ENGINE ROOM	90,000 BTU/HR	2–HYDRONIC UNIT HEATERS
AMR–2	45,000 BTU/HR	HYDRONIC UNIT HEATER
STEERING GEAR RM.	5 kWe	ELECTRIC UNIT HEATER
STARBOARD PASSENGER SPACE	60,000 BTU/HR	HYDRONIC AIR HANDLER
STARBOARD PASSENGER SPACE	31,500 BTU/HR	HYDRONIC BASEBOARD CONVECTORS
PORT PASSENGER SPACE	60,000 BTU/HR	HYDRONIC AIR HANDLER
PORT PASSENGER SPACE	38,500 BTU/HR	HYDRONIC BASEBOARD CONVECTORS
CREW SPACE	7,000 BTU/HR	HYDRONIC BASEBOARD CONVECTORS
EACH WATER CLOSET	1,750 BTU/HR	HYDRONIC BASEBOARD CONVECTORS
PILOTHOUSE	14,000 BTU/HR	HYDRONIC BASEBOARD CONVECTORS
PILOTHOUSE	2 kWe	ELECTRIC FAN AND DUCT HEATER

STATE OF MAINE
JOHN A. HUNTER
NO. 10737
REGISTERED PROFESSIONAL ENGINEER
10-3-05

ITEM	PART CODE	DESCRIPTION	QTY
16	–	–	–
15	–	–	–
14	–	–	–
13	–	–	–
12	ELECTRIC UNIT HEATER	2.0 KW, ENCLOSED CU ELEMENTS, GALV. STEEL CAB 1–SPEED TEFC MOTOR.	1
11	ELECTRIC UNIT HEATER	INDEECO TRIAD 5.0 KW, CU ELMTS, STEEL CAB 1–SPEED TEFC MOTOR, MEET USCG & ABS REQUIREMENTS	1
10	UNDER DECK UNIT HEATER	TRANE UHP 102 PL UNIT HEATER 45,000 BTU/HR., CU ELEMENT, CU/AL FINS, STEEL CABL., 1–SPEED TEFC MOTOR	4
9	MAKEUP AIR HANDLER	TRANE BC HC 36, 60,000 BTU/HR, 1200 CFM, TWO ROW, CU COIL, CU/AL FINS VARIBLE SPD. FAN, MAKE UP/RECIRC AIR DAMPERS	2
8	BASEBOARD HEATERS	TRANE COMM. 1750 BTU/HR, SINGLE PASS CU TUBES, CU/AL FINS, GALV. STEEL COVERS	5
7	BASEBOARD HEATERS	TRANE COMM. 3500 BTU/HR, SINGLE PASS CU TUBES, CU/AL FINS, GALV. STEEL COVERS	28
6	WHEELHOUSE HW CIRC. PP	TACO 1400–10 5 GPM @15 TDH	1
5	AIR HANDLER CIRC. PUMP	TACO 1400–10 12.4 GPM @15 TDH	1
4	PASS. HW CIRC. PP	TACO 1400–10 10 GPM @15 TDH	1
3	BELOW MN DK HW CIRC. PP	TACO 1400–20 18.5 GPM @25 TDH	1
2	EXPANSION TANK	SHIPYARD SUPPLY	1
1	BURNHAM V–9	381,000 BTU/HR., OIL FIRED NATURAL CIRCULATION, C/W COMBUSTION BLOWER & OIL PUMP, BURNHAM V–9 OR EQUAL	1

BILL OF MATERIALS

NO.	REFERENCES
3	–
2	SPECIFICATIONS
1	575–02–533, DOMESTIC WATER SUPPLY SYSTEM DIAGRAM

APPROVALS:	SUBMIT DATE	APPROVED BY	APPROVED DATE	RE–SUBMIT DATE	APPROVED BY	APPROVED DATE
OWNER	–	–	–	–	–	–
USCG	–	–	–	–	–	–
ABS	–	–	–	–	–	–
USPHS	–	–	–	–	–	–

Seaworthy Systems, Inc.
MARINE ENGINEERS NAVAL ARCHITECTS
P.O. BOX 965
ESSEX, CT 06426
USA
TEL: 860–767–9061
FAX: 860–767–1263

FOR
MAINE STATE FERRY SERVICE
P.O. BOX 645, 517A MAIN STREET
ROCKLAND, ME 04841–0645

CHECKED BY	AUTH. BY	SCALE
JAH 09–30–05	JAH 08–01–05	NONE
DRAWN BY	ORIG. DATE	
JEK	08–07–05	DIMS IN INCHES UNLESS OTHERWISE STATED

TITLE 154' RO/RO/PASS FERRY

DOMESTIC HEATING SYSTEM DIAGRAM

SIZE	DRG No.	REV.	SHEET
D	575–02–511	–	1 OF 2

SSI FILE No. s:\active\projnumb\575–02\575–02–511.dwg

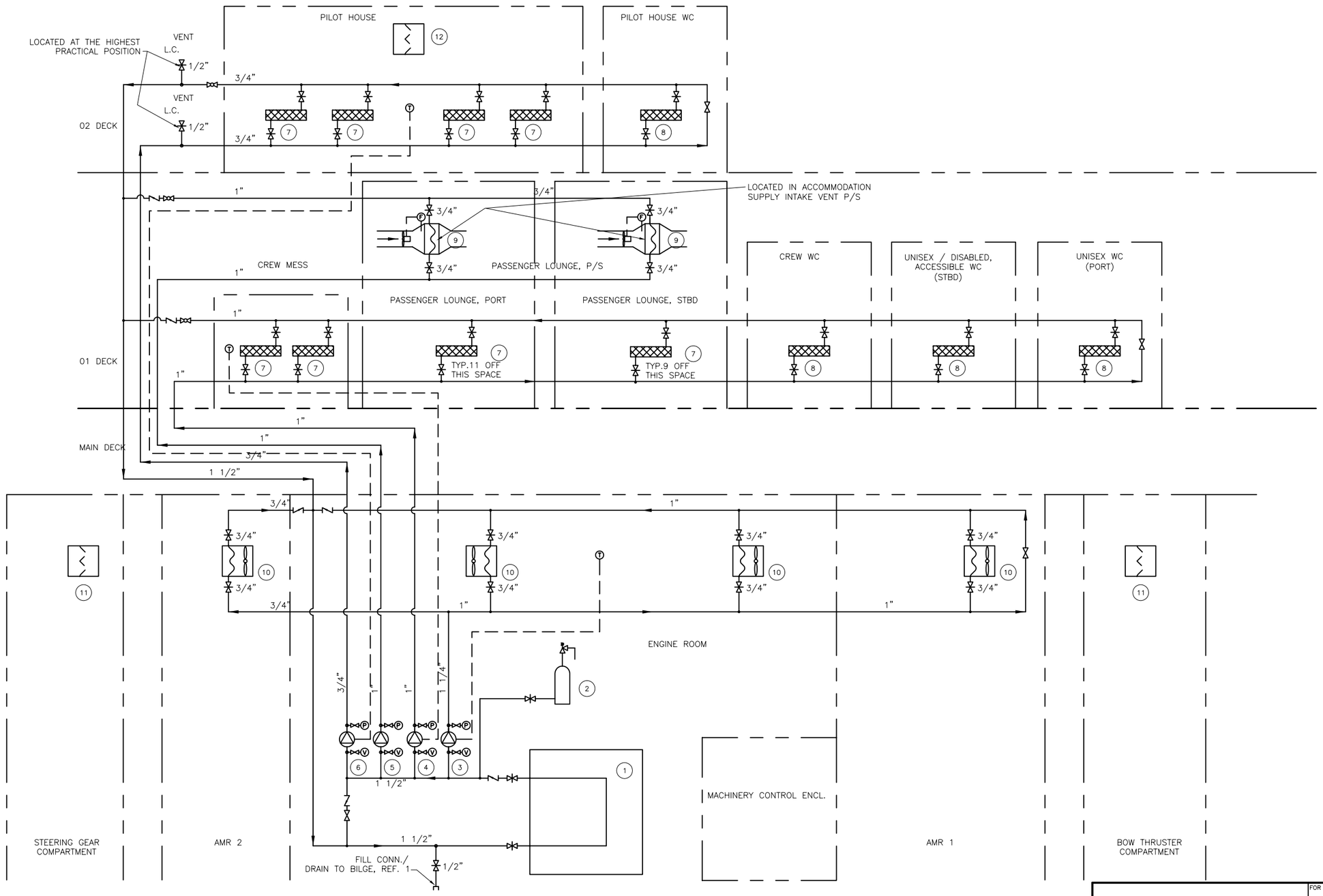

Seaworthy Systems, Inc.
MARINE ENGINEERS NAVAL ARCHITECTS
P.O. BOX 965
ESSEX, CT 06426
USA
TEL: 860-767-9061
FAX: 860-767-1263

FOR
MAINE STATE FERRY SERVICE
P.O. BOX 645, 517A MAINE ST
ROCKLAND, ME 04841-0645

TITLE 154' RO/RO/PASS FERRY

DOMESTIC HEATING SYSTEM DIAGRAM

SCALE: AS STATED

DIMS IN INCHES UNLESS OTHERWISE STATED

SIZE	DRG No.	REV.	SHEET
D	575-02-511	—	2 OF 2

SSI FILE No. s:\active\projumb\575-02\Drafting\Active\575-02-511.dwg

SYMBOLS LIST

0.25FT^2	VENT DUCT		DUCT RUNNING TOWARDS VIEWER
	VENTILATION FAN		EXHAUST LOUVER
	VENT. SUPPLY TERMINAL C/W ADJUST. DAMPER & DIRECTIONAL VANES		LOUVER DAMPER
	VENTILATION EXHAUST TERMINAL		

REVISIONS

REV.	DATE	DESCRIPTION	SHEET	ZONE	AUTH^{D}
A	–	–			
B	–	–			
C	–	–			
D	–	–			

GENERAL NOTES:

1. ALL MATERIALS, WORKMANSHIP AND INSTALLATION TO MEET THE REQUIREMENTS OF CFR 46 SUBCHAPTER H AND ABS, AND BE TO THE SATISFACTION OF THE USCG OCMI.

2. ALL WEATHER DECK VENTILATION INLET AND OUTLET TERMINALS SHALL BE PROVIDED WITH BIRD SCREENS AND WEATHER PROOF CLOSURES.

3. NOMINAL DISTRIBUTION DUCT VELOCITY: 800 FPM. INLET LOUVER VELOCITY: 400 FPM.

5. DESIGN BASED ON AVAILABLE DATA. FINAL DESIGN PENDING CERTIFIED VENDOR INFORMATION.

6. 6. GENERAL REQUIREMENTS FOR EXHAUST SHEET STEEL EXHAUST DUCTS:

A. ALL SHEET METAL DUCT PIPING AND FITTINGS ARE NOT TO BE LESS THAN USSG 18 GAGE.

B. DUCT WORK AND FITTINGS TO BE GALVANIZED STEEL "INDUSTRIAL CLAMP TOGETHER" OR "QUICK–FIT" SYSTEMS. CLAMPS ARE TO BE STAINLESS STEEL (S.S.).

C. A SUFFICIENT NUMBER OF JOINTS ARE TO BE USED IN ORDER TO MAKE THE DUCTS PORTABLE IWO MACHINERY, EQUIPMENT AND FITTINGS THAT REQUIRE DISMANTLING FOR PERIODIC OVERHAUL AND WHENEVER NECESSARY FOR ACCESS TO OTHER PIPING SYSTEMS, ELECTRICAL SYSTEMS AND FITTINGS.

D. HANGERS SHALL BE FITTED FOR PROPER SUPPORT OF ALL DUCTWORK AND TERMINALS, 8'–0" MAXIMUM SPACING.

7. FIRE DAMPERS TO BE PNEUMATICALLY OPERATED AND CONTROLLED FROM EMERGENCY STATION IN PILOTHOUSE.

8. A SUFFICIENT DEGREE OF CONTROL TO THE AIR HANDLERS SHALL BE INSTALLED TO PROVIDE A MINIMUM OF 5 AIR CHANGES PER HOUR PER SPACE WHILE MAINTAINING AN AIR HANDLER OUTLET TEMPERATURE OF 65 F WITH AN OUTSIDE AIR TEMPERATURE OF 0 F.

1. CALCULATIONS ARE BASED ON SNAME BULLETIN 4–16.
2. MINIMUM RATE OF AIR CHANGES:

	DESIGN	PRESENT	
PILOTHOUSE :	60 MIN	FAN: 100 CFM	2.5 AIR CHANGES / HOUR
PASS. LOUNGE P:	20 MIN	FAN: 1300 CFM	12 AIR CHANGES / HOUR *
PASS. LOUNGE S :	20 MIN	FAN: 1200 CFM	15 AIR CHANGES / HOUR
W.C :	4 MIN	FAN: 80 CFM	25 AIR CHANGES / HOUR

* RATE WITHOUT RECIRCULATION

3. MINIMUM DESIGN VOLUME OF OUTDOOR AIR: 12 CFM PER PERSON.

STATE OF MAINE JOHN A. HUNTER NO. 10737 REGISTERED PROFESSIONAL ENGINEER

10-3-05

BILL OF MATERIALS

ITEM	PART CODE	DESCRIPTION	QTY
7	FIRE DAMPER	GREENHECK MANUAL FIRE DAMPER	1
6	UNIT HEATER	PILOTHOUSE ELECTRIC UNIT HEATER/DEFOGGER UNIT	1
5	LOUVER	INLET AIR LOUVER, MOISTURE TRAP	2
4	FIRE DAMPER	GREENHECK PNEUMATIC OPERATED FIRE DAMPER, USCG APP.	2
3	AIR REGISTER	CEILING TYPE SQUARE DIFFUSER WITH DAMPER	11
2	W.C. EXHAUST FAN	KANALFLAKT K4XL 110 CFM @ 0.5" WC IN LINE DUCT FAN	4
1	ACCOMMODATION VENTILATION AIR HANDLER	GREENHECK MSCF SIZE 25 AIR HANDLER 1300 CFM NOM. WITH 60,000 BTU/HR HYDRONIC HEATING COIL	2

REFERENCES

NO.	
4	–
3	–
2	–
1	575–02–511, HOT WATER HEATING SYSTEM DIAGRAM

APPROVALS:	SUBMIT DATE	APPROVED BY	APPROVED DATE	RE–SUBMIT DATE	APPROVED BY	APPROVED DATE
OWNER	–	–	–	–	–	–
USCG	–	–	–	–	–	–
ABS	–	–	–	–	–	–
USPHS	–	–	–	–	–	–

Seaworthy Systems, Inc.
MARINE ENGINEERS NAVAL ARCHITECTS
P.O. BOX 965
ESSEX, CT 06426
USA
TEL: 860–767–9061
FAX: 860–767–1263

FOR
MAINE STATE FERRY SERVICE
P.O. BOX 645, 517A MAIN STREET
ROCKLAND, ME 04841–0645

CHECKED BY	AUTH^{D} BY	SCALE
DAR MM–DD–YY	JAH 08–01–05	NONE
DRAWN BY JEK	ORIG^{L} DATE 08–10–05	DIMS IN INCHES UNLESS OTHERWISE STATED

TITLE
154' RO/RO/PASS FERRY
DOMESTIC VENTILATION SYSTEM DIAGRAM

SIZE	DRG No.	REV.	SHEET
D	575–02–514	–	1 OF 3

SSI FILE No. s:\active\projnumb\575–02\575–02–514.dwg

2:12–03–2014

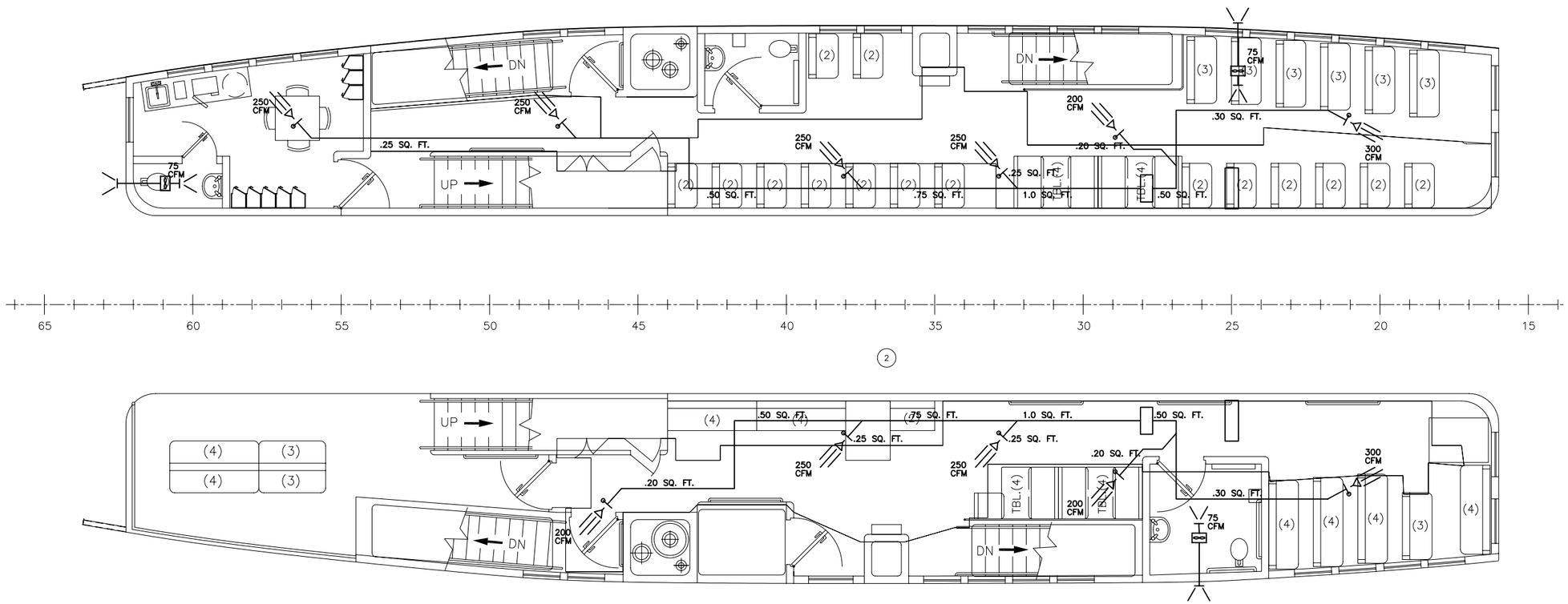

PLAN AT 01 DECK

N.T.S.

Seaworthy Systems, Inc.
MARINE ENGINEERS NAVAL ARCHITECTS
P.O. BOX 965
ESSEX, CT 06426
USA
TEL: 860-767-9061
FAX: 860-767-1263

FOR
MAINE STATE FERRY SERVICE
P.O. BOX 645, 517A MAIN STREET
ROCKLAND, ME 04841-0645

TITLE 154' RO/RO/PASS FERRY

DOMESTIC VENTILATION SYSTEM DIAGRAM

SCALE		SIZE	DRG No.	REV.	SHEET
N.T.S.	DIMS IN INCHES UNLESS OTHERWISE STATED	D	575-02-514	—	2 OF 3

SSI FILE No. s:\active\projnumb\575-02\575-02-514.dwg

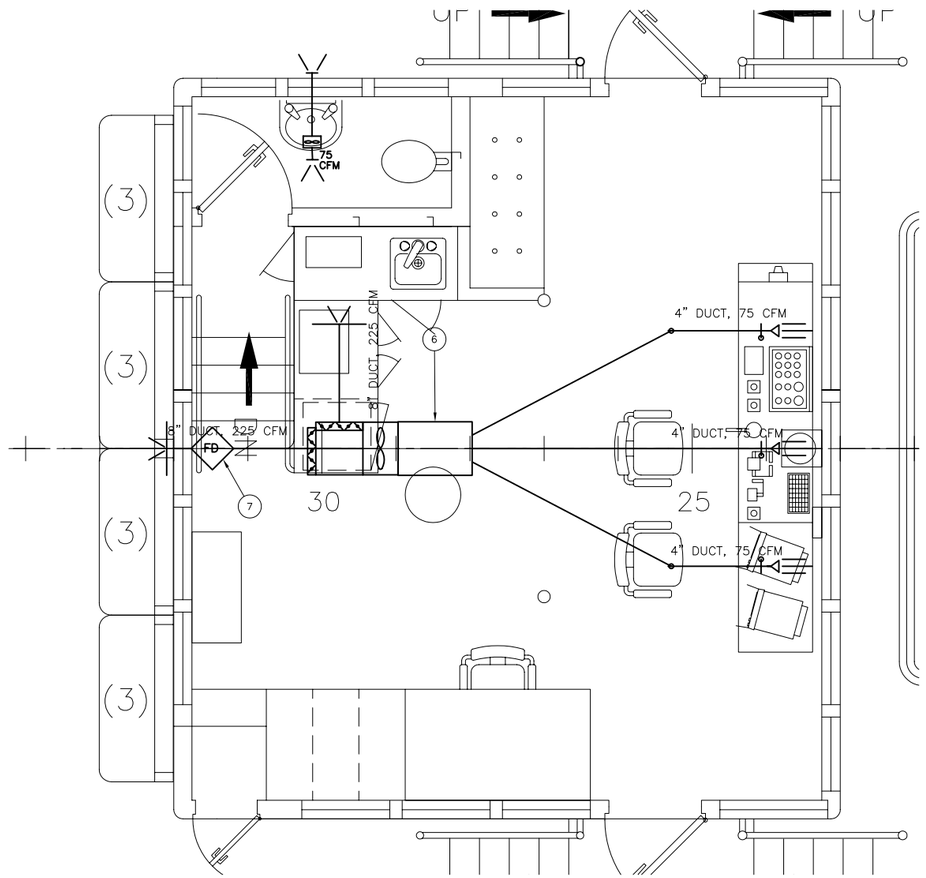

PILOT HOUSE

DUCT HEATER

SCALE: 1/2 IN = 1 FT

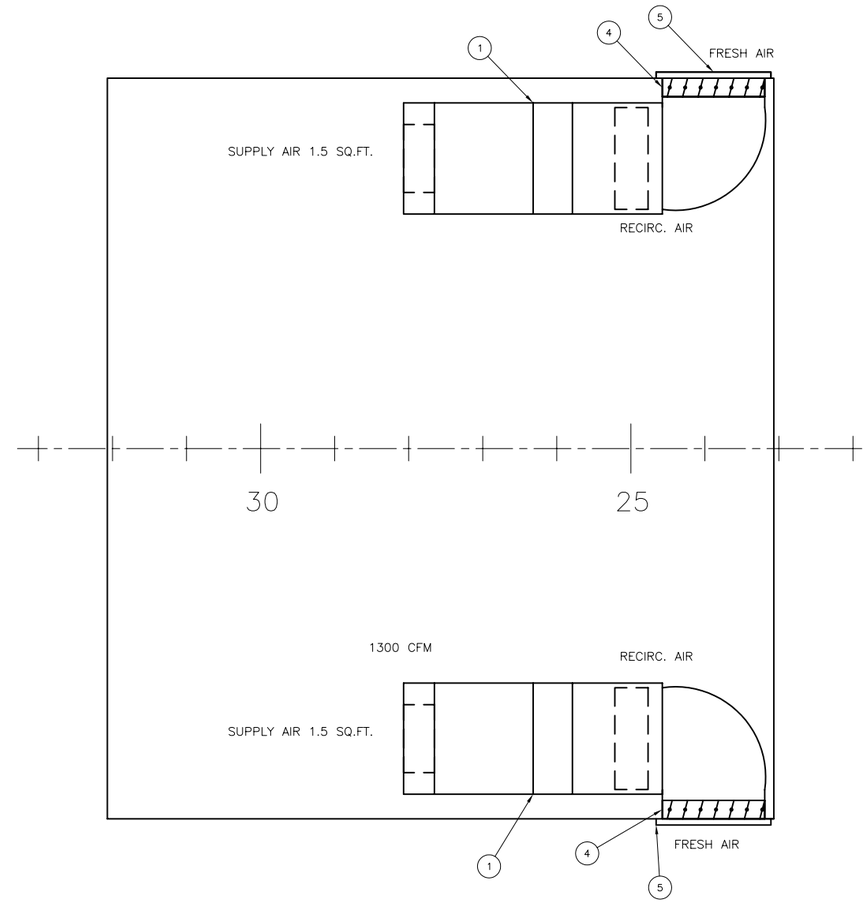

ACCOMODATION AIR HANDLER BENEATH PILOT HOUSE

SCALE: 1/2 IN = 1 FT

$\frac{1}{2}$"=1'-0"

Seaworthy Systems, Inc.
MARINE ENGINEERS NAVAL ARCHITECTS
P.O. BOX 965
ESSEX, CT 06426
USA
TEL: 860-767-9061
FAX: 860-767-1263

FOR

MAINE STATE FERRY SERVICE
P.O. BOX 645, 517A MAIN STREET
ROCKLAND, ME 04841-0645

TITLE 154' RO/RO/PASS FERRY

DOMESTIC VENTILATION SYSTEM DIAGRAM

SCALE		SIZE	DRG No.	REV.	SHEET
N.T.S.	DIMS IN INCHES UNLESS OTHERWISE STATED	D	575-02-514	—	3 OF 3

SSI FILE No. s:\active\projnumb\575-02\575-02-514.dwg

MATERIAL SCHEDULE

SERVICE	DESIGN TEMP & PRESSURE	SIZE	PIPE	TAKEDOWN JOINTS				FITTINGS	VALVES	
				MATERIAL	GASKETS	BOLTING	NUTS		BODY	TRIM
FIREMAIN	150 PSIG & 85° F	2" AND ABOVE	SEAMLESS STL, ASTM A106 GR. A OR B, SCH 40 GALV.	FLGD, S.W. OR SLIP-ON, CARBON STL, ASTM A105	1/16" THK FULL-FACE NON-ASBESTOS W/ NITRILE BINDER	CARBON STL, ASTM A307 GR B	CARBON STL, ASTM A563 GR A	BUTTWELD, CARBON STL, ASTM A234 GR WPB S.W., CARBON STL, ASTM A234 GR WPB OR A105	BUTTERFLY (WAFER OR LUG), D.I., ASTM A395 FLGD OR BUTTWELD, CARBON STL, ASTM A216 GR WCB OR A105	BRONZE OR S.S.
		1½" AND BELOW		UNIONS, S.W. OR SCRD, CARBON STL, ASTM A105				SCRD, BRONZE, ASME SB61 OR SB62	FLGD OR SCRD., BRONZE ASME SB61 OR SB62	BRONZE

CALCULATIONS

FIRE MAIN SYSTEM (46 CFR 76.10)

REQUIRED FIRE PUMP CAPACITY = 2/3 OF BILGE PUMP CAPACITY
BILGE PUMP CAPACITY = 400 FPM THROUGH 2.76" THEORETICAL PIPE SIZE (SEE REF. 2)
= 124.3 GPM [16.62 CFS]
MINIMUM FIRE PUMP CAPACITY = (2/3) * (124.3) = 83 GPM
PUMP TO SUPPLY TWO HIGHEST HYDRANTS ON VESSEL AT 50 PSI
FROM NVIC 6-72, SECT. A.7.1, REQ'D FLOW FOR EACH NOZZLE = 83 GPM (5/8" NOZZLE)
REQUIRED FIRE PUMP CAPACITY = 2 * 83 = 166 GPM
REQUIRED FIRE PUMP HEAD = 210 FT
PUMP MOTOR REQUIRED 15.2 BHP/MOTOR SIZE 20 HP

SPRINKLING SYSTEM (46 CFR 76.23)

REQUIRED SYSTEM COVERAGE = 12 GPM FOR EACH 100 SQ. FT. OF DECK AREA PROTECTED
= 306 GPM FOR 2550 SQ. FT. (1 ZONE)
USE 27 HEADS ("VIKING" VK712, 3/8" ORIFICE), FLOW RATE 12.5 GPM PER HEAD @ 20 PSI
AND 95 SQ. FT. COVERAGE
REQUIRED SPRINKLER PUMP CAPACITY = 12.5 * 27 = 336 GPM
REQUIRED SPRINKLER PUMP HEAD = 75 FT
PUMP MOTOR REQUIRED 10.1 BHP/MOTOR SIZE 15 HP

SYMBOLS LIST

	CENTRIFUGAL PUMP	P	PRESSURE GAUGE
	GATE VALVE	VP	VACUUM PRESSURE GAUGE
	BALL VALVE	M	MACHINERY SPACE FIRE STATION
	S.D.N.R. GLOBE VALVE	E	EXTERIOR FIRE STATION
	WAFER TYPE BUTTERFLY VALVE	I	INTERIOR FIRE STATION
	PLATE STRAINER	3/4"	LINE SIZE
R	REMOTE OPERATED VALVE		ITEM SUPPLIED W/PRINCIPAL COMPONENT
V	VACUUM GAUGE		STOP VALVE
	END OF HEADER OR DISTR'N MANIFOLD		SPRINKLER HEAD
PS	PRESSURE SWITCH		CHECK VALVE

REVISIONS

REV.	DATE	DESCRIPTION	SHEET	ZONE	AUTH.
A	–	–			
B	–	–			
C	–	–			
D	–	–			

GENERAL NOTES:

1. ALL MATERIALS, WORKMANSHIP AND INSTALLATION TO MEET THE REQUIREMENTS OF CFR 46 SUBCHAPTER H AND ABS, AND BE TO THE SATISFACTION OF THE USCG OCMI.

2. ALL VALVES, COCKS AND CONNECTIONS SHALL BE READILY ACCESSIBLE FOR MAINTENANCE AND OPERATION. PIPE RUNS SHALL BE DESIGNED FOR EASY REMOVAL.

3. HULL PIPE PENETRATION AND ADJOINING VALVES SHALL BE IN ACCORDANCE WITH REGULATORY REQUIREMENTS. PIPE FROM THE SEA CHEST TO THE SEAS SUCTION VALVE SHALL BE XS AND INTERNALLY COATED WITH HIGH SOLIDS EPOXY.

4. RELIEF VALVES ARE TO BE FITTED ON PUMP DISCHARGES ONLY AS REQUIRED FOR FIRE HOSE OVER PRESSURE PROTECTION. THESE VALVES ARE TO BE ARRANGED FOR SELF DRAINING AND DISCHARGE TO A VISIBLE BILGE LOCATION.

5. PIPE LAYOUT TO BE SELF DRAINING TOWARDS THE DRAIN VALVES LOCATED AT FIRE PUMPS. UNAVOIDABLE LOW POINTS IN PIPING SYSTEM SHALL BE FITTED WITH ½" HOSE VALVES FOR DRAINAGE.

6. PIPE JOINTS SHALL BE PROVIDED FOR EASE OF REMOVAL OF PIPES, VALVES AND EQUIPMENT TO THE DISCRETION OF THE OWNER'S REPRESENTATIVE.

7. PIPING PASSING THROUGH OIL OR WATERTIGHT BOUNDARIES SHALL BE FITTED WITH SLEEVES WELDED TO THE BOUNDARY AND THE PIPING.

8. HANGERS SHALL BE PROVIDED TO SUPPORT THE PIPING. HANGER LOCATIONS SHALL BE CHOSEN TO PREVENT VISIBLE PIPE VIBRATION.

9. MACHINERY SPACE ISOLATING VALVES ARE TO BE ACCESSIBLE OUTSIDE THE MACHINERY SPACES BEING SERVED.

STATE OF MAINE
JOHN HUNTER
NO. 10737
REGISTERED PROFESSIONAL ENGINEER
10-3-05

ITEM	PART CODE	DESCRIPTION	MATERIAL	QTY
10	PRESS. SWITCH	LOW PRESSURE SWITCH		2
9	MACH. SPACE FIRE STATION	1 1/2" HYDRANT VALVE, 50' 1 1/2" USCG APPROVED HOSE, NOZZLE NOZZLE, HOSE WRENCH, EXTERIOR RACK		5
8	GATE VALVE	6" – 150 GATE VALVE	BRONZE	5
7	SIMPLEX STRAINER	HAYWARD 6" SIMPLEX STRAINER, 10 MESH	BRONZE	3
6	EXT. FIRE STATION	1 1/2" HYDRANT VALVE, 50' 1 1/2" USCG APPROVED HOSE, NOZZLE NOZZLE, HOSE WRENCH, EXTERIOR RACK		4
5	INT. FIRE STATION	1 1/2" HYDRANT VALVE, 50' 1 1/2" USCG APPROVED HOSE, NOZZLE NOZZLE, HOSE WRENCH, INTERIOR RACK		2
4	SPRINKLER HEAD	VIKING VK712 SPRINKLER HEAD, K=2.8, 3/8" ORIFICE, 120 DEG.	BRONZE	27
3	FIRE/BILGE PUMP	DURCO 3X1.5 PEDESTAL PUMP, 170 GPM, 210' HEAD, 20 HP, 3500 RPM TEFC MOTOR W/SOFT START	SS	1
2	SPRINKLER PUMP	DURCO 4X3 PEDESTAL PUMP, 336 GPM, 75' HEAD, 15 HP, 3500 RPM TEFC MOTOR W/SOFT START	SS	1
1	FIRE PUMP	DURCO 3X1.5 PEDESTAL PUMP, 170 GPM, 210' HEAD, 20 HP, 3500 RPM TEFC MOTOR W/SOFT START	SS	1

BILL OF MATERIALS

NO.	REFERENCES
5	–
4	575-02-551, COMPRESSED AIR SYSTEM DIAGRAM
3	575-02-551, TANK VENTS SYSTEM DIAGRAM
2	575-02-529, BILGE SYSTEM DIAGRAM
1	575-02-528, DOMESTIC GRAY & BLACK WATER SYSTEM DIAGRAM

APPROVALS:	SUBMIT DATE	APPROVED BY	APPROVED DATE	RE-SUBMIT DATE	APPROVED BY	APPROVED DATE
OWNER	–	–	–	–	–	–
USCG	–	–	–	–	–	–
ABS	–	–	–	–	–	–
USPHS	–	–	–	–	–	–

Seaworthy Systems, Inc.
MARINE ENGINEERS NAVAL ARCHITECTS
P.O. BOX 965
ESSEX, CT 06426
USA
TEL: 860-767-9061
FAX: 860-767-1263

CHECKED BY	AUTH. BY	SCALE
JAH 09-30-05	JAH 09-30-05	NONE
DRAWN BY	ORIG. DATE	DIMS IN INCHES UNLESS OTHERWISE STATED
JEK	08-03-05	

FOR
MAINE STATE FERRY SERVICE
P.O. BOX 645, 517A MAIN STREET
ROCKLAND, ME 04841-0645

TITLE 154' RO/RO/PASS FERRY

FIRE, SPRINKLER & WASHDOWN SYSTEM DIAGRAM

SIZE	DRG No.	REV.	SHEET
D	575-02-521	–	1 OF 2

SSI FILE No. s:\active\projnumb\575-02\575-02-521.dwg

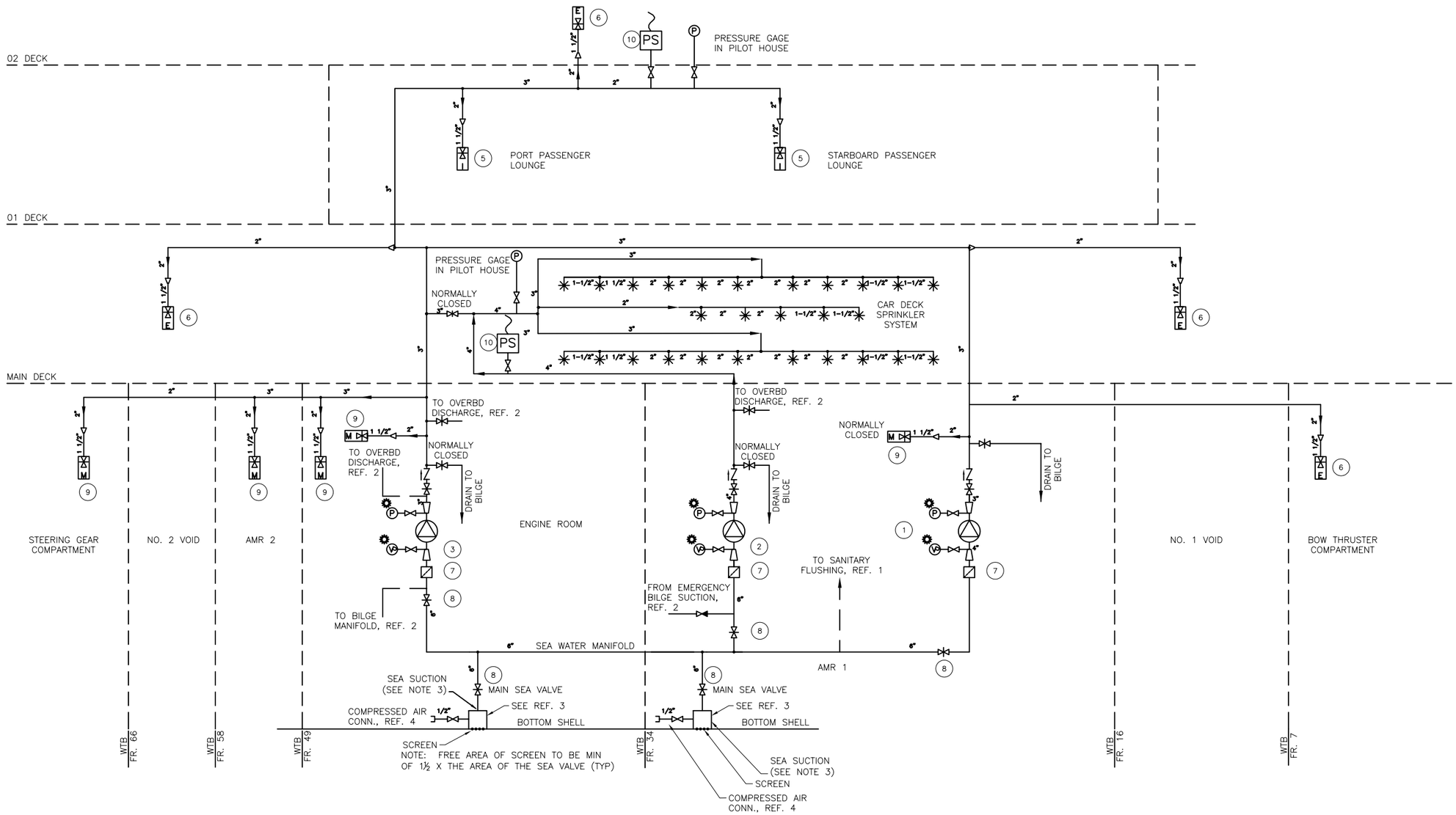

Seaworthy Systems, Inc.
MARINE ENGINEERS NAVAL ARCHITECTS
P.O. BOX 965
ESSEX, CT 06426
USA
TEL: 860-767-9061
FAX: 860-767-1263

FOR
MAINE STATE FERRY SERVICE
P.O. BOX 645, 517A MAIN STREET
ROCKLAND, ME 04841-0645

TITLE
154' RO/RO/PASS FERRY
FIRE, SPRINKLER AND WASHDOWN SYSTEM DIAGRAM

SCALE: N.T.S.
DIMS IN INCHES UNLESS OTHERWISE STATED

SIZE	DRG No.	REV.	SHEET
D	575-02-521	–	2 OF 2

SSI FILE No. s:\active\projnumb\575-02\575-02-521.dwg

MATERIAL SCHEDULE

SERVICE	DESIGN TEMP & PRESSURE	SIZE	PIPE	TAKEDOWN JOINTS				FITTINGS	VALVES	
				MATERIAL	GASKETS	BOLTS	NUTS		BODY	TRIM
GRAY WATER	100° F, 15 PSIG	ALL	GALVANIZED SMLS OR E.R.W. CARBON STL., ASTM A106 GR B OR A53 BG B TY S OR E	FLANGES: S.W. OR SLIP ON, GALVANIZED ASTM A105 UNIONS: S.W., GALVANIZED ASTM A105	1/16" THK FULL–FACE NON–ASBESTOS W/ NITRILE BINDER	CARBON STL., ASTM A307 GR B	CARBON STL., ASTM A563 GR A	BUTTWELD, CARBON STL., ASTM A234 GR WPB S.W., CARBON STL., ASTM A234 GR WPB OR A105	FLGD, D.I. ASTM A 395	S.S. OR BRONZE

GENERAL NOTES:

1. ALL MATERIALS, WORKMANSHIP AND INSTALLATION TO MEET THE REQUIREMENTS OF CFR 46 SUBCHAPTER H AND ABS, AND BE TO THE SATISFACTION OF THE USCG OCMI.

2. PIPING PASSING THROUGH OIL OR WATERTIGHT BOUNDARIES SHALL BE FITTED WITH SLEEVES WELDED TO THE BOUNDARY AND THE PIPING.

3. HANGERS SHALL BE PROVIDED TO SUPPORT THE PIPING. HANGER LOCATIONS SHALL BE CHOSEN TO PREVENT VISIBLE PIPE VIBRATION.

4. TAKEDOWN JOINTS SHALL BE PROVIDED WHERE NECESSARY FOR REMOVAL AND SERVICE OF EQUIPMENT.

5. DRAIN LINES SHALL BE INSTALLED TO ENSURE CONTINUOUS DRAINAGE.

6. CLEAN OUTS TO BE POSITIONED IN ACCCESSIBLE LOCATIONS ON ALL GRAVITY HEADERS AND RISERS.

ABBREVIATIONS

C.S.	CAST STEEL
D.I.	DUCTILE IRON
E.R.W.	ELECTRIC RESISTANCE WELDED
FGD.	FORGED
FLGD.	FLANGED
F.S.	FORGED STEEL
SCH.	SCHEDULE
SCRD.	SCREWED
SMLS.	SEAMLESS
S.S.	STAINLESS STEEL

SYMBOLS LIST

SYMBOL	DESCRIPTION	SYMBOL	DESCRIPTION
	PIPING		BUTTERFLY VALVE, WAFER TYPE
	GATE VALVE		ANGLE VALVE, STOP CHECK
	GLOBE VALVE		VENT
	BALL VALVE		SUCTION STRAINER
	HORIZ SWING CHECK VALVE		FILTER
	GLOBE STOP CHECK VALVE		FLEXIBLE CONNECTION
	COENCENTRIC REDUCER		GATE VALVE, WITH REMOTER OPERATOR
	Y STRAINER		
	FLANGED JOINT		SIMPLEX STRAINER
	BUTTERFLY VALVE, MANUALLY OPERATED		DUPLEX STRAINER
	DECK DRAIN, PLAN VIEW		DECK DRAIN, SECTION VIEW
	PIPE, TURNING UP OR TOWARD		PIPE, TURNING DOWN OR AWAY
	VOID VENT & GOOSENECK WITHOUT FLOAT BALL CHECK VALVE		VOID VENT & GOOSENECK WITH FLOAT BALL CHECK VALVE

REVISIONS

REV.	DATE	DESCRIPTION	SHEET	ZONE	AUTH.
A	–	–			
B	–	–			
C	–	–			
D	–	–			

STATE OF MAINE
JOHN A. HUNTER
NO. 10737
REGISTERED PROFESSIONAL ENGINEER
10-3-05

ITEM	PART CODE	DESCRIPTION	MATERIAL	QTY
5	–	–	–	–
4	–	–	–	–
3	–	–	–	–
2	–	–	–	–
1	–	–	–	–

BILL OF MATERIALS

NO.	REFERENCES
3	–
2	–
1	–

APPROVALS:	SUBMIT DATE	APPROVED BY	APPROVED DATE	RE–SUBMIT DATE	APPROVED BY	APPROVED DATE
OWNER	–	–	–	–	–	–
USCG	–	–	–	–	–	–
ABS	–	–	–	–	–	–
USPHS	–	–	–	–	–	–

Seaworthy Systems, Inc.
MARINE ENGINEERS NAVAL ARCHITECTS
P.O. BOX 965
ESSEX, CT 06426
USA
TEL: 860–767–9061
FAX: 860–767–1263

FOR
MAINE STATE FERRY SERVICE
P.O. BOX 645, 517A MAIN STREET
ROCKLAND, ME 04841–0645

CHECKED BY	AUTH. BY	SCALE
JAH 09–30–05	JAH 09–30–05	NONE
DRAWN BY LAG	ORIG. DATE 09–16–05	DIMS IN INCHES UNLESS OTHERWISE STATED

TITLE
154' RO/RO/PASS FERRY
SCUPPERS & DECK DRAINS SYSTEM DIAGRAM

SIZE	DRG No.	REV.	SHEET
D	575–02–526	–	1 OF 2

SSI FILE No. s:\active\projnumb\575–02\575–02–526.dwg

232–02–526

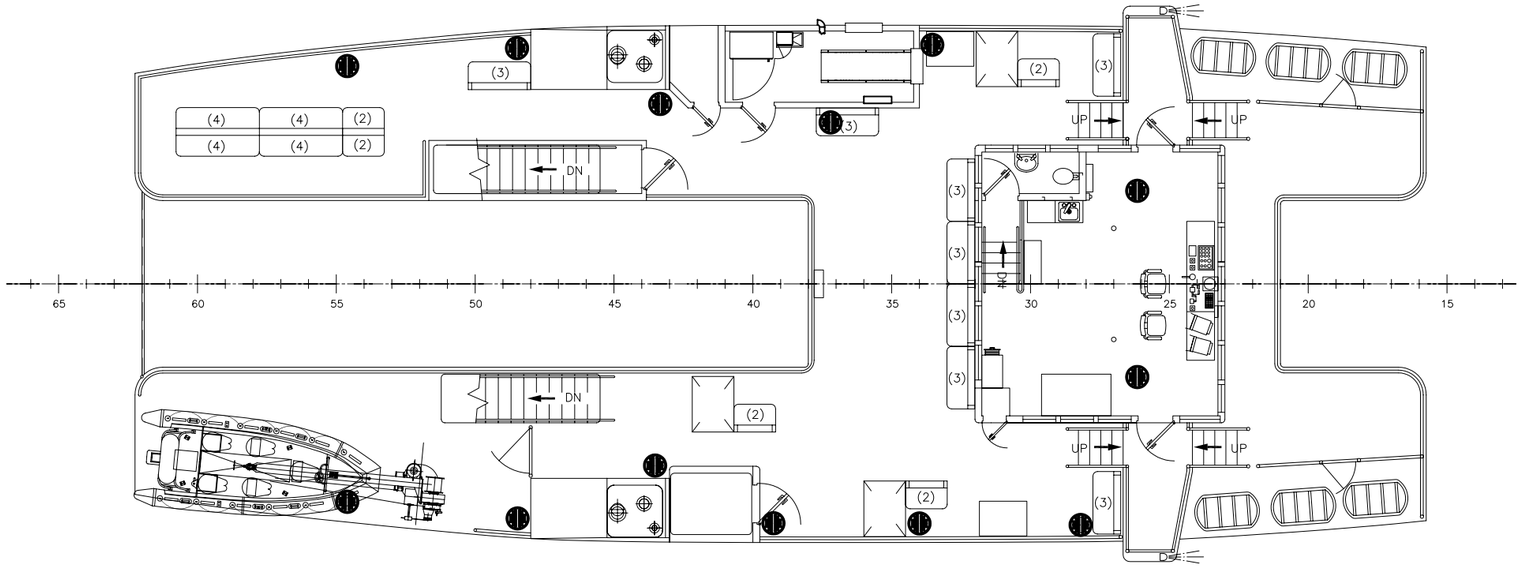

PLAN VIEW
02 DECK DRAINS
SCALE: 3/16 IN = 1 FT

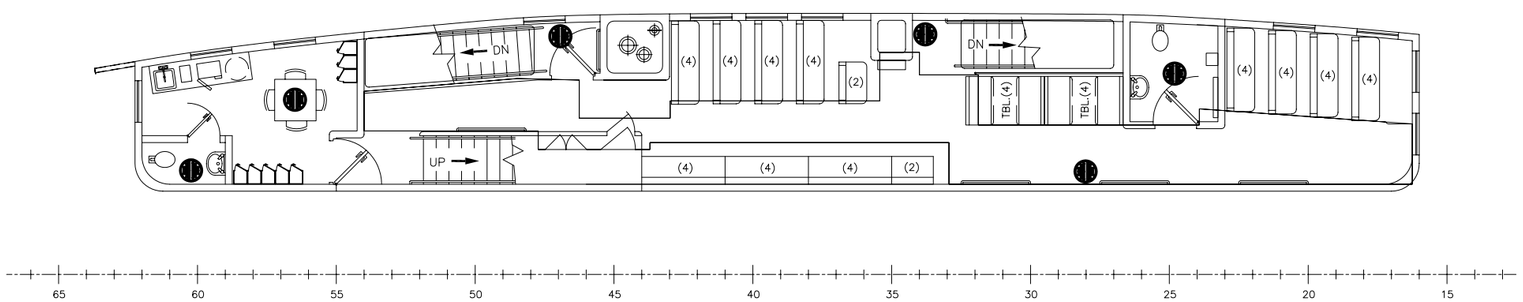

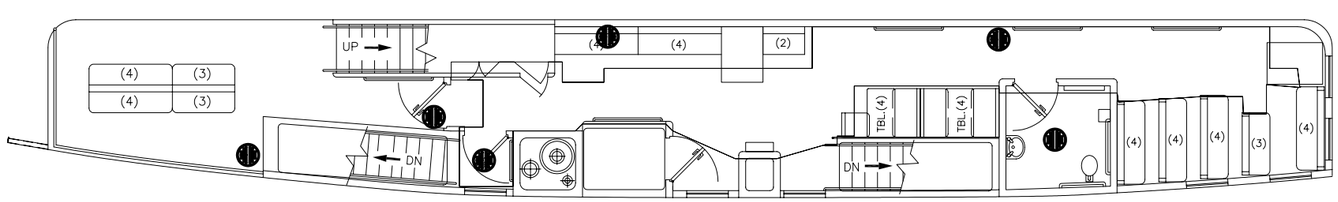

PLAN VIEW
01 DECK DRAINS
SCALE: 3/16 IN = 1 FT

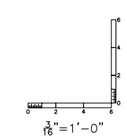

Seaworthy Systems, Inc.
MARINE ENGINEERS NAVAL ARCHITECTS
P.O. BOX 965
ESSEX, CT 06426
USA
TEL: 860-767-9061
FAX: 860-767-1263

FOR
MAINE STATE FERRY SERVICE
P.O. BOX 645, 517A MAIN STREET
ROCKLAND, ME 04841-0645

TITLE 154' RO/RO/PASS FERRY

SCUPPERS & DECK DRAINS
SYSTEM DIAGRAM

SCALE N.T.S.

DIMS IN INCHES UNLESS OTHERWISE STATED

SIZE	DRG No.	REV.	SHEET
D	575-02-526	—	2 OF 2

SSI FILE No. s:\active\projnumb\575-02\575-02-526.dwg

575-02-526

MATERIAL SCHEDULE

SERVICE	DESIGN TEMP & PRESSURE	SIZE	PIPE	TAKEDOWN JOINTS MATERIAL	TAKEDOWN JOINTS GASKETS	TAKEDOWN JOINTS BOLTS	TAKEDOWN JOINTS NUTS	FITTINGS	VALVES BODY	VALVES TRIM
GRAY WATER	100° F, 15 PSIG	ALL	GALVANIZED SMLS OR E.R.W. CARBON STL., ASTM A106 GR B OR A53 BG B TY S OR E	FLANGES: S.W. OR SLIP ON, GALVANIZED ASTM A105 UNIONS: S.W., GALVANIZED ASTM A105	1/16" THK FULL-FACE NON-ASBESTOS W/ NITRILE BINDER	CARBON STL., ASTM A307 GR B	CARBON STL., ASTM A563 GR A	BUTTWELD, CARBON STL., ASTM A234 GR WPB S.W., CARBON STL., ASTM A234 GR WPB OR A105	FLGD, D.I. ASTM A 395	S.S. OR BRONZE
SANITARY WATER	100° F 150 PSIG OPERATING PRESSURE: 80 PSIG	1" AND UNDER	SMLS. COPPER, ASTM B 88 TY K	FLANGES: SILBRAZE , BRONZE ASME SB62 UNIONS: BRAZED OR SCRD, BRONZE ASME SB61 OR SB62	1/16" THK FULL-FACE NON-ASBESTOS W/ NITRILE BINDER	CARBON STL., ASTM A307 GR B	CARBON STL., ASTM A563 GR A	SILBRAZE, COPPER ASME SB88 TY K	FLGD OR BRAZED, BRONZE ASME SB61 OR SB62 BUTTERFLY WAFER, D.I. ASTM A395	S.S. OR BRONZE
		OVER 1"	SMLS OR WELDED COPPER NICKEL ALLOY 90:10, ASME SB466 OR SB467							
SEWAGE DRAINS	100° F 150 PSIG OPERATING PRESSURE: 80 PSIG	ALL	SMLS. OR E.R.W., CARBON STL ASTM A106 GR B OR A53 TY S OR E	FLANGES: S.W. OR SLIP ON, ASTM A105 UNIONS: S.W., ASTM A105	1/16" THK FULL-FACE NON-ASBESTOS W/ NITRILE BINDER	CARBON STL., ASTM A307 GR B	CARBON STL., ASTM A563 GR A	BUTTWELD, CARBON STL., ASTM A234 GR WPB S.W., CARBON STL., ASTM A234 GR WPB OR A105	FLGD, D.I. ASTM A 395 OR CARBON STL ASTM A216 GR WCB OR A105 BRAZED OR SCRD, BRONZE ASME SB61 OR SB62	S.S. OR BRONZE

SYMBOLS LIST

	SCREW-DOWN GLOBE VALVE	3/4"G	LINE SIZE (GRAY WATER)
	GATE VALVE	3/4"B	LINE SIZE (BLACK WATER)
	S.D.N.R. GLOBE VALVE	3/4"V	LINE SIZE (VENT)
	SELF CLOSING DRAIN VALVE/ DRAIN OFF VALVE		DECK DRAIN C/W TRAP
V	VACUUM GAUGE		ITEM SUPPLIED W/PRINCIPAL COMPONENT
P	PRESSURE GAUGE		DRINKING FOUNTAIN
HLA	HIGH LEVEL ALARM		DUPLEX FILTER C/W CHANGE-OVER VALVE
LLA	LOW LEVEL ALARM		REDUCER
PS	PRESSURE SWITCH		FLAME TRAP VENT
	SUCTION BELLMOUTH		W.C.
	SCREWED CAP PIPE TERMINAL		URINAL
	HOSE CONNECTOR C/W CAP & KEEP CHAIN		SINK
	CENTRIFUGAL PUMP		
TLI	TLI		

REVISIONS

REV.	DATE	DESCRIPTION	SHEET	ZONE	AUTH
A	–	–			
B	–	–			
C	–	–			
D	–	–			

GENERAL NOTES:

1. ALL MATERIALS, WORKMANSHIP AND INSTALLATION TO MEET THE REQUIREMENTS OF CFR 46 SUBCHAPTER H AND ABS, AND BE TO THE SATISFACTION OF THE USCG OCMI.

2. ALL VALVES, COCKS AND CONNECTIONS SHALL BE READILY ACCESSIBLE FOR MAINTENANCE AND OPERATION. PIPE RUNS SHALL BE DESIGNED FOR EASY REMOVAL.

4. HULL PIPE PENETRATION AND ADJOINING VALVES SHALL BE IN ACCORDANCE WITH REGULATORY REQUIREMENTS.

5. PIPE JOINTS SHALL BE PROVIDED FOR EASE OF REMOVAL OF PIPES, VALVES AND EQUIPMENT TO THE DISCRETION OF THE OWNER'S REPRESENTATIVE.

6. PIPING PASSING THROUGH OIL OR WATERTIGHT BOUNDARIES SHALL BE FITTED WITH SLEEVES WELDED TO THE BOUNDARY AND THE PIPING.

7. HANGERS SHALL BE PROVIDED TO SUPPORT THE PIPING. HANGER LOCATIONS SHALL BE CHOSEN TO PREVENT VISIBLE PIPE VIBRATION.

8. DRAIN & VENT LINE SHALL BE INSTALLED TO ENSURE CONTINUOUS DRAINAGE.

9. COMMON DRAINS & VENTS BELOW MAIN DECK MUST BE ARRANGED TO PREVENT PROGRESSIVE FLOODING BETWEEN WATERTIGHT COMPARTMENTS.

10. CLEAN OUTS TO BE POSITIONED IN ACCESSIBLE LOCATION ON ALL GRAVITY HEADERS AND RISERS.

11. GRAVITY DRAINS TO HAVE A MINIMUM OF 1/4" PER FOOT SLOPE.

12. LEVEL TRANSMITTER, IF FITTED TO BOTTOM OF TANK SHALL HAVE VALVE TO PERMIT SERVICING TRANSMITTER WITHOUT DRAINING TANK.

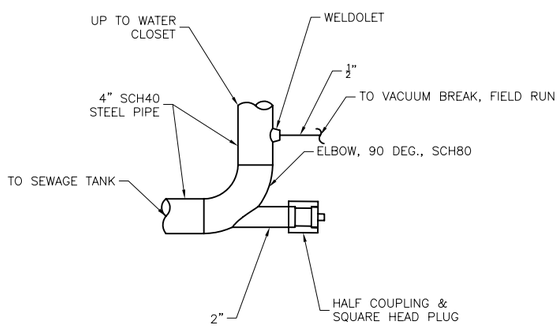

PROFILE VIEW, WATER CLOSET DRAIN
TYPICAL INSTALLATION
SCALE: N.T.S.

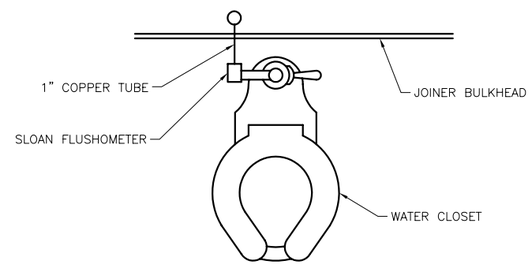

PLAN VIEW, WATER CLOSET
TYPICAL INSTALLATION
SCALE: N.T.S.

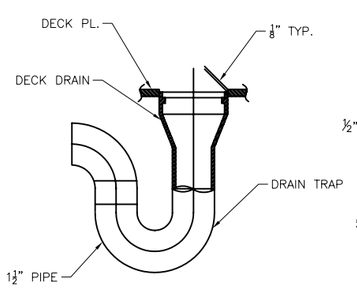

DECK DRAIN TRAP DETAIL
TYPICAL INSTALLATION
SCALE: N.T.S.

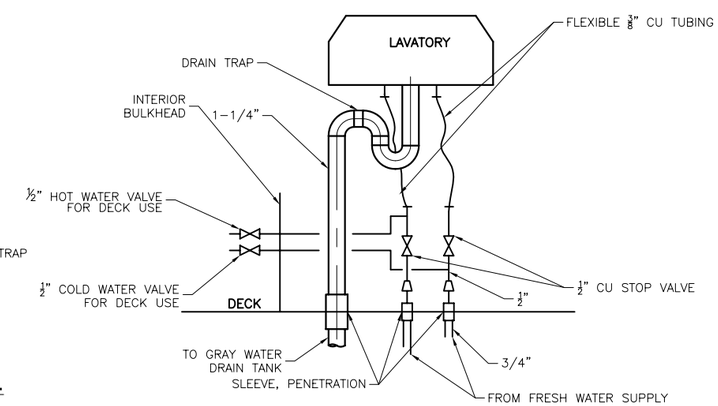

LAVATORY PIPING DETAIL
TYPICAL INSTALLATION
SCALE: N.T.S.

ITEM	PART CODE	DESCRIPTION		QTY
12	LEVEL XMITTER	KING PNEUMATIC LEVEL SENSOR/TRANSMITTER	SS	1
11	LEVEL ALARM SWITCH	MOBREY M-TYPE	SS	1
10	DUPLEX STRAINER	HAYWARD 53 BTX DUPLEX STRAINER, 2" WITH 20 MESH SS BASKET, FLANGED	BRONZE	1
9	WATER COOLER	HALSEY-TAYLOR SCW4A FREE STANDING WATER COOLER, 4 GPH	SS	1
8	SINK	AMERICAN STANDARD FREE STANDING WORK SINK WITH SLOAN POLARIS SL 1121 FAUCET SET.	SS	1
7	SINK	AMERICAN STANDARD CULINAIRE 18 SINGLE BOWL SINK W/SLOAN POLARIS SL-2731SINGLE HANDLE FAUCET SET.	SS	2
6	LAVATORY	AMERICAN STANDARD COMRADE LAVATORY WITH SLOAN POLARIS SL-0871 FAUCET SET.	VITREOUS CHINA	3
5	LAVATORY	AMERICAN STANDARD 9141.011 ADA COMPLIANT LAVATORY W/SLOAN POLARIS 0892 FAUCET.	VITREOUS CHINA	1
4	TOILET	AMERICAN STANDARD MADERA ELONGATED TOILET FOR PRESS. SYS. W/SEAT AND SLOAN DOLPHIN FLUSHOMETER	VITREOUS CHINA	3
3	TOILET	AMER. STANDARD MADERA 17"H ADA COMP. TOILET FOR PRESS. SYS. W/SEAT AND SLOAN DOLPHIN FLUSHOMETER	VITREOUS CHINA	1
2	SANI. PUMP SET	SANITARY PRESSURE TANK AND PUMP SET. 80 GAL. CAPACITY, 15 GPM PUMP, 45 PSIG	SS	1
1	HOLDING TANK	1800 GALLONS		1

BILL OF MATERIALS

STATE OF MAINE
JOHN A. HUNTER
NO. 10737
REGISTERED PROFESSIONAL ENGINEER
10-3-05

NO.	REFERENCES
5	–
4	575-02-506, TANK VENTS SYSTEM DIAGRAM
3	575-02-533, DOMESTIC WATER SUPPLY SYSTEM DIAGRAM
2	575-02-529, BILGE SYSTEM DIAGRAM
1	575-02-521, FIRE, SPRINKLER & WASHDOWN SYSTEM DIAGRAM

APPROVALS:	SUBMIT DATE	APPROVED BY	APPROVED DATE	RE-SUBMIT DATE	APPROVED BY	APPROVED DATE
OWNER	–	–	–	–	–	–
USCG	–	–	–	–	–	–
ABS	–	–	–	–	–	–
USPHS	–	–	–	–	–	–

Seaworthy Systems, Inc.
MARINE ENGINEERS NAVAL ARCHITECTS
P.O. BOX 965
ESSEX, CT 06426
USA
TEL: 860-767-9061
FAX: 860-767-1263

FOR
MAINE STATE FERRY SERVICE
P.O. BOX 645, 517A MAIN STREET
ROCKLAND, ME 04841-0645

TITLE 154' RO/RO/PASS FERRY
SANITARY GRAY & BLACK WATER SYSTEM DIAGRAM

CHECKED BY	AUTH BY	SCALE
JAH 09-30-05	JAH 09-30-05	NONE
DRAWN BY JEK	ORIG DATE 08-07-05	DIMS IN INCHES UNLESS OTHERWISE STATED

SIZE D | DRG No. 575-02-528 | REV. – | SHEET 1 OF 2
SSI FILE No. s:\active\projnumb\575-02\575-02-528.dwg

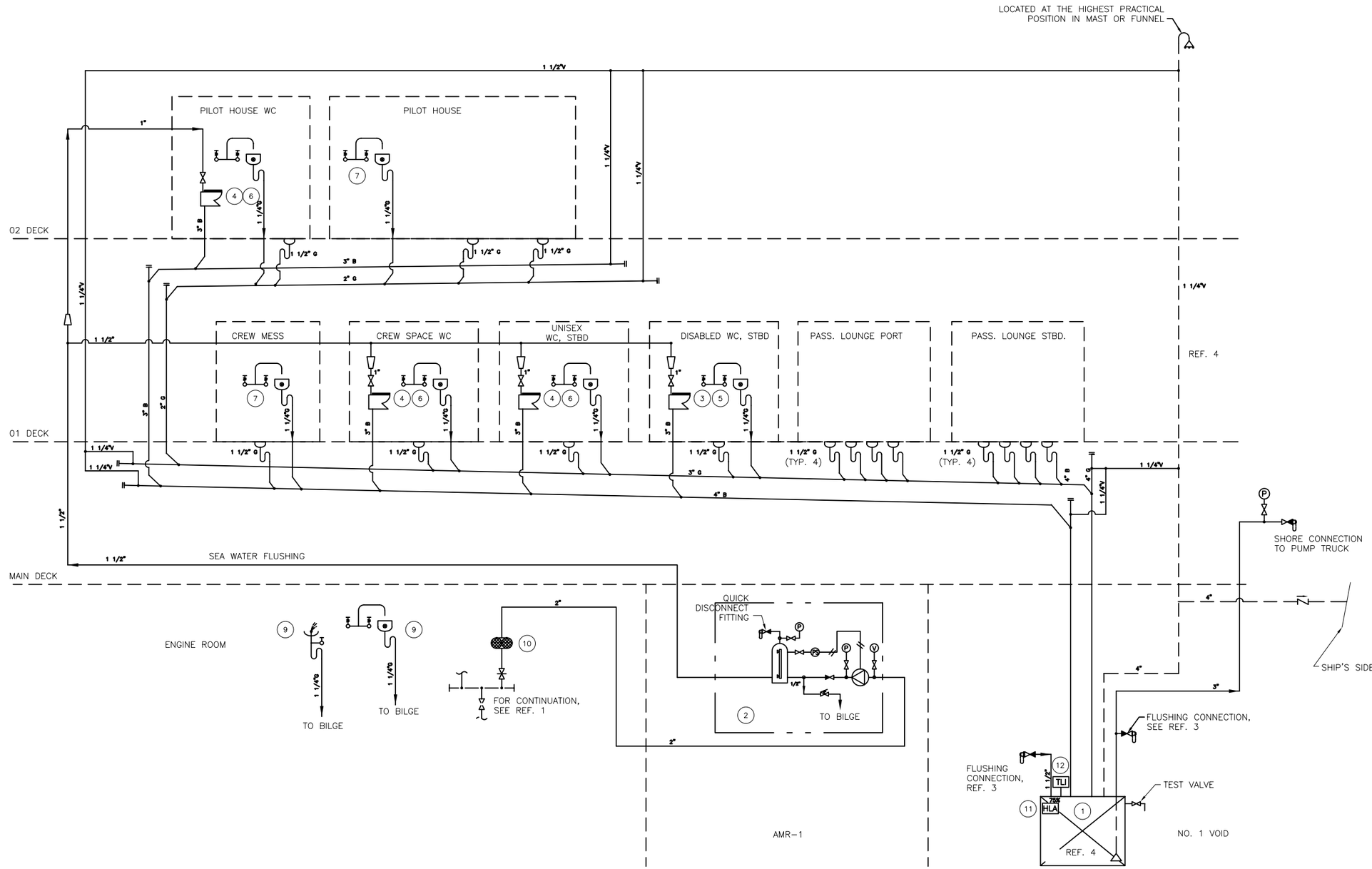

Seaworthy Systems, Inc.
MARINE ENGINEERS NAVAL ARCHITECTS
P.O. BOX 965
ESSEX, CT 06426
USA
TEL: 860-767-9061
FAX: 860-767-1263

FOR
MAINE STATE FERRY SERVICE
P.O. BOX 645, 517A MAIN STREET
ROCKLAND, ME 04841-0645

TITLE 154' RO/RO/PASS FERRY

SANITARY GRAY AND BLACK WATER SYSTEM DIAGRAM

SCALE		SIZE	DRG No.	REV.	SHEET
N.T.S.	DIMS IN INCHES UNLESS OTHERWISE STATED	D	575-02-528	—	2 OF 2

SSI FILE No. s:\active\projnumb\575-02\575-02-528.dwg

MATERIAL SCHEDULE

SERVICE	DESIGN TEMP & PRESSURE	SIZE	PIPE	TAKEDOWN JOINTS MATERIAL	TAKEDOWN JOINTS GASKETS	TAKEDOWN JOINTS BOLTING	TAKEDOWN JOINTS NUTS	FITTINGS	VALVES BODY	VALVES TRIM
BILGE	--	OVER 2"	SEAMLESS OR ERW STL ASTM A106 GR. B OR A53 GR. B	FLNGD SLIP-ON OR BUTTWELD, CARBON STL, ASTM A105	1/16" THK FULL-FACE NON-ASBESTOS	CARBON STL, ASTM A307 GR B	CARBON STL, ASTM A563 GR A	BUTTWELD, CARBON STL, ASTM A234 GR WPB S.W. OR SCRD., ASTM A234 GR WPB OR A105	FLGD, BUTTERFLY WAFER OR LUG, D.I. ASTM A395 OR CARBON STL ASTM A216 GR WCB (OR A105)	S.S. OR BRONZE
		2" AND BELOW		SCRD, CARBON STL, ASTM A105					SCRD, BRONZE, ASME SB61 OR SB62	S.S. OR BRONZE

PIPE SIZE CALCULATIONS PER USCG CFR 56.50-50(d)

BILGE MAIN

$d = 1 + \sqrt{L(B+D)/2500}$ – INCHES

L = 147.5, B = 36.33, D = 14.8

BILGE BRANCHES

$d = 1 + \sqrt{C(B+D)/1500}$ – INCHES

B = 38, D = 14.83

BILGE PUMP CAPACITY
PER U.S.C.G. 46 CFR 56.50-55(c) PUMP MUST DEVELOP NOT LESS THAN
400 FT/MIN VELOCITY IN THE BILGE MAIN
3" XS I.D. = 2.90"
Q = 137 GPM

BILGE MAIN & BRANCH

SERVICE	L OR C	B	D	ID	PIPE
MAINIFOLD	147.5	36.3	14.8	2.74	3"XS
FOREPPEAK	14	36.3	14.8	1.69	2"XS
BOW THRUSTER	18	36.3	14.8	1.78	2"XS
NO 1 VOID	18	36.3	14.8	1.78	2"XS
AMR 1	18	36.3	14.8	1.78	2"XS
ER	30	36.3	14.8	2.01	2"XS
AMR 2	18	36.3	14.8	1.78	2"XS
NO 2 VOID	16	36.3	14.8	1.74	2"XS
S.G. ROOM	16	36.3	14.8	1.74	2"XS

SYMBOLS LIST

	CENTRIFUGAL PUMP		PRESSURE GAUGE
	SCREW-DOWN GLOBE VALVE		SUCTION BELLMOUTH
	SWING CHECK VALVE		OVERBOARD DISCHARGE
	S.D.N.R. GLOBE VALVE		END OF HEADER OR DISTR. MANIFOLD
	BILGE MUD BOX	3/4"	LINE SIZE
	PLATE STRAINER		ITEM SUPPLIED W/PRINCIPAL COMPONENT
	ROSE BOX		GATE VALVE
	VACUUM GAUGE		VACUUM/PRESSURE GAUGE
	FLOAT SWITCH		

REVISIONS

REV.	DATE	DESCRIPTION	SHEET	ZONE	AUTH
A	–	–			
B	–	–			
C	–	–			
D	–	–			

GENERAL NOTES:

1. ALL MATERIALS, WORKMANSHIP AND INSTALLATION TO MEET THE REQUIREMENTS OF CFR 46 SUBCHAPTER H AND ABS, AND BE TO THE SATISFACTION OF THE USCG OCMI.

2. ALL VALVES, COCKS AND CONNECTIONS SHALL BE READILY ACCESSIBLE FOR MAINTENANCE AND OPERATION. PIPE RUNS SHALL BE DESIGNED FOR EASY REMOVAL.

3. HULL PIPE PENETRATION AND ADJOINING VALVES SHALL BE IN ACCORDANCE WITH REGULATORY REQUIREMENTS AND SHALL BE POSITIONED ABOVE THE WATER LINE.

4. MINOR DRAIN POCKETS CAUSED BY SHIP'S CONSTRUCTION DETAILS MAY BE SERVICED BY ADDITIONAL BILGE SUCTIONS OR ELIMINATED BY APPROVED FILLER COMPOUNDS.

5. PIPING PASSING THROUGH OIL OR WATERTIGHT BOUNDARIES SHALL BE FITTED WITH SLEEVES WELDED TO THE BOUNDARY AND THE PIPING.

6. HANGERS SHALL BE PROVIDED TO SUPPORT THE PIPING. HANGER LOCATIONS SHALL BE CHOSEN TO PREVENT VISIBLE PIPE VIBRATION.

7. THE BILGE MAIN AND BILGE PUMPS SHALL BE LOCATED INBOARD A MINIMUM OF 20% OF THE VESSEL'S MOLDED BEAM.

8. BILGE SUCTION STRAINERS AND ALARM FLOAT SWITCHED TO BE LOCATED IN DEEPEST PART OF THE COMPARTMENT SERVED.

9. BILGE MANIFOLD VALVE HANDWHEELS TO BE READILY ACCESSIBLE ABOVE DECK PLATES.

10. BILGE LINE STRAINERS (9) ARE TO BE READILY ACCESSIBLE FOR CLEANING.

ITEM	PART CODE	DESCRIPTION	MATERIAL	QTY
12	BILGE ALARM	GEMS LS-270	CuNi	9
11	PIPE	2"XS PIPE	CS	AR
10	STRAINER	2"-BILGE STRAINER, SCREWED	BRONZE	7
9	STRAINER	2"-150 SIMPLEX STRAINER, 5 MESH, SCREWED	BRONZE	1
8	STRAINER	HAYWARD 72 2"-150 SIMPLEX STRAINER, 20 MESH	BRONZE	1
7	STOP VLV	2"-150 SCREWED STOP/CHECK VALVE W/ REMOTE OPERATOR FROM MAIN DECK	BRONZE	2
6	STOP VLV	1-1/2"-150 SCREWED STOP/CHECK VALVE W/ REMOTE OPERATOR FROM MAIN DECK	BRONZE	1
5	STOP/CHECK VLV	2"-150 SCREWED STOP/CHECK VALVE	BRONZE	6
4	STRAINER	HAYWARD 72 3"-150 SIMPLEX STRAINER, 20 MESH	BRONZE	1
3	FIRE/BILGE PUMP	DURCO PEDESTAL PUMP, 170 GPM, 210' HEAD, 20 HP, 3500 RPM TEFC MOTOR W/SOFT START	SS	1
2	E.R. OILY WATER PP	FLOMAX MP-5 SELF PRIMING. PEDESTAL PUMP, 30 GPM, 3500 RPM, SINGLE SPEED TEFC MOTOR	CS	1
1	BILGE PUMP	DURCO PEDESTAL PUMP, 137 GPM, 40' HEAD, 5 HP, 1750 RPM SINGLE SPEED TEFC MOTOR	SS	1

BILL OF MATERIALS

STATE OF MAINE
JOHN A. HUNTER
NO. 10737
REGISTERED PROFESSIONAL ENGINEER
10-3-05

NO.	REFERENCES
3	SPECIFICATIONS, PIPING & VALVE MATERIAL STANDARDS
2	575-02-593, WASTE OIL & OILY WATER SYSTEM DIAGRAM
1	575-02-521, FIRE, SPRINKLER & WASHDOWN SYSTEM DIAGRAM

APPROVALS:	SUBMIT DATE	APPROVED BY	APPROVED DATE	RE-SUBMIT DATE	APPROVED BY	APPROVED DATE
OWNER	–	–	–	–	–	–
USCG	–	–	–	–	–	–
ABS	–	–	–	–	–	–
USPHS	–	–	–	–	–	–

Seaworthy Systems, Inc.
MARINE ENGINEERS NAVAL ARCHITECTS
P.O. BOX 965
ESSEX, CT 06426
USA
TEL: 860-767-9061
FAX: 860-767-1263

FOR
MAINE STATE FERRY SERVICE
P.O. BOX 645, 517A MAIN STREET
ROCKLAND, ME 04841-0645

TITLE
154' RO/RO/PASS FERRY

BILGE SYSTEM DIAGRAM

CHECKED BY	AUTH. BY	SCALE
JAH 09-30-05	JAH 09-30-05	NONE
DRAWN BY JEK	ORIG. DATE 08-01-05	DIMS IN INCHES UNLESS OTHERWISE STATED

SIZE	DRG No.	REV.	SHEET
D	575-02-529	–	1 OF 2

SSI FILE No. s:\active\projnumb\575-02\575-02-529.dwg

232-02-529

DO NOT SCALE, IF IN DOUBT ASK

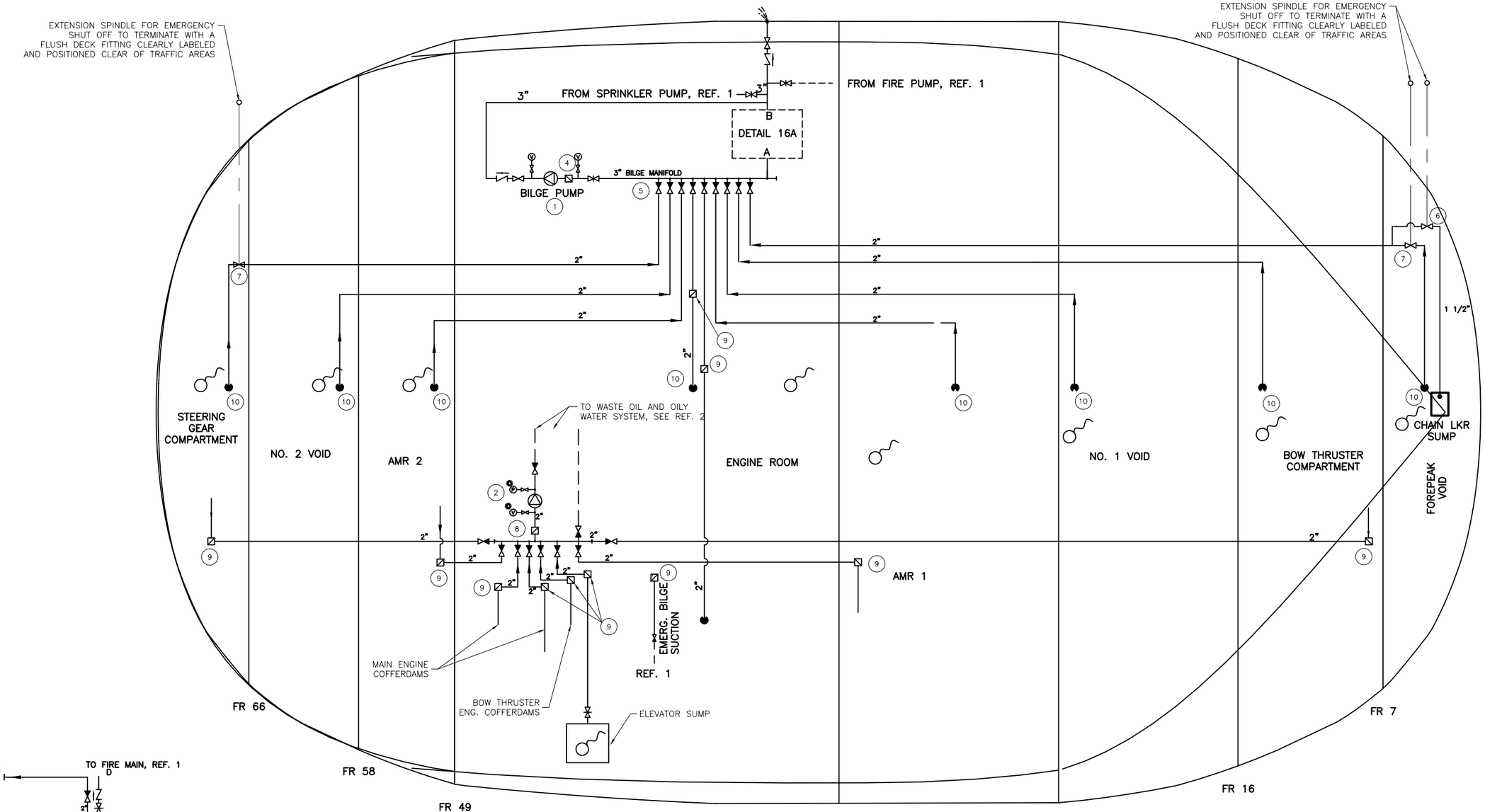

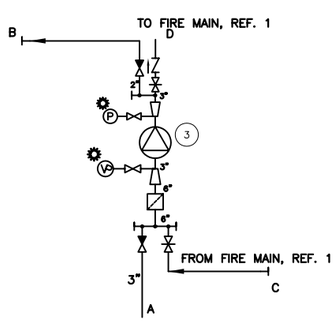

DETAIL 16A

N.T.S.

Seaworthy Systems, Inc.
P.O. BOX 965
ESSEX, CT 06426
USA
TEL: 860-767-9061
FAX: 860-767-1263

FOR
MAINE STATE FERRY SERVICE
P.O. BOX 645, 517A MAIN STREET
ROCKLAND, ME 04841-0645

TITLE
154' RO/RO/PASS FERRY
BILGE SYSTEM DIAGRAM

SCALE N.T.S.

DIMS IN INCHES UNLESS OTHERWISE STATED

SIZE	DRG No.	REV.	SHEET
D	575-02-529	–	2 OF 2

SSI FILE No. s:\active\projnumb\575-02\575-02-529.dwg

MATERIAL SCHEDULE

SERVICE	DESIGN TEMP & PRESSURE	SIZE	PIPE	TAKEDOWN JOINTS MATERIAL	TAKEDOWN JOINTS GASKETS	TAKEDOWN JOINTS BOLTS	TAKEDOWN JOINTS NUTS	FITTINGS	VALVES BODY	VALVES TRIM
FRESH WATER	100° F 150 PSIG OPERATING PRESSURE: 80 PSIG	1" AND UNDER	SMLS. COPPER, ASTM B 88 TY K	FLANGES: SILBRAZE , BRONZE ASME SB62 UNIONS: BRAZED OR SCRD, BRONZE ASME SB61 OR SB62	1/16" THK FULL-FACE NON-ASBESTOS W/ NITRILE BINDER	CARBON STL., ASTM A307 GR B	CARBON STL., ASTM A563 GR A	SILBRAZE, COPPER ASME SB88 TY K	FLGD OR BRAZED, BRONZE ASME SB61 OR SB62 BUTTERFLY WAFER, D.I. ASTM A395	S.S. OR BRONZE
		OVER 1"	SMLS OR WELDED COPPER NICKEL ALLOY 90:10, ASME SB466 OR SB467							

SYMBOLS LIST

	SCREW-DOWN GLOBE VALVE		PRESSURE GAUGE
	BALL VALVE		VACUUM GAUGE
	S.D.N.R. GLOBE VALVE		SUCTION BELLMOUTH
	SELF CLOSING DRAIN VALVE/ DRAIN OFF VALVE		HOSE CONNECTOR C/W CAP & KEEP CHAIN
	GATE VALVE		HOSE CONNECTION
	PRESSURE RELIEF VALVE	3/4"	LINE SIZE
	SWING CHECK VALVE		ITEM SUPPLIED W/PRINCIPAL COMPONENT
	SCREWED CAP PIPE TERMINAL		CENTRIFUGAL PUMP
TLI	TLI		BACK PRESSURE REGULATING VALVE
PS	PRESSURE SWITCH		DRINKING FOUNTAIN
	DUPLEX FILTER C/W CHANGEOVER VALVE		WASH BASIN

REVISIONS					
REV.	DATE	DESCRIPTION	SHEET	ZONE	AUTH.
A	–	–			
B	–	–			
C	–	–			
D	–	–			

GENERAL NOTES:

1. ALL MATERIALS, WORKMANSHIP AND INSTALLATION TO MEET THE REQUIREMENTS OF CFR 46 SUBCHAPTER H AND ABS, AND BE TO THE SATISFACTION OF THE USCG OCMI.

2. ALL VALVES, COCKS AND CONNECTIONS SHALL BE READILY ACCESSIBLE FOR MAINTENANCE AND OPERATION. PIPE RUNS SHALL BE DESIGNED FOR EASY REMOVAL.

3. HULL PIPE PENETRATION AND ADJOINING VALVES SHALL BE IN ACCORDANCE WITH REGULATORY REQUIREMENTS.

4. DRAIN & VENT LINES SHALL BE INSTALLED TO ENSURE CONTINUOUS DRAINAGE.

5. PIPE JOINTS SHALL BE PROVIDED FOR EASE OF REMOVAL OF PIPES, VALVES AND EQUIPMENT TO THE DISCRETION OF THE OWNER'S REPRESENTATIVE.

6. PIPING PASSING THROUGH OIL OR WATERTIGHT BOUNDARIES SHALL BE FITTED WITH SLEEVES WELDED TO THE BOUNDARY AND THE PIPING.

7. HANGERS SHALL BE PROVIDED TO SUPPORT THE PIPING. HANGER LOCATIONS SHALL BE CHOSEN TO PREVENT VISIBLE PIPE VIBRATION.

8. ALL WATER PIPES TO BE PROTECTED FROM FREEZING AS REQUIRED.

9. SPIGOTS PROVIDED FROM LAVATORY SUPPLY LINES TO BE SUFFICIENTLY HIGH TO PERMIT FILLING OF A 12 QUART UTILITY BUCKET.

10. TANK LEVEL TRANSMITTERS WHERE FITTED TO THE BOTTOM OF THE TANK SHALL HAVE SHUT OFF VALVES TO PERMIT SERVICING OF THE TRANSMITTER WITHOUT DRAINING THE TANK.

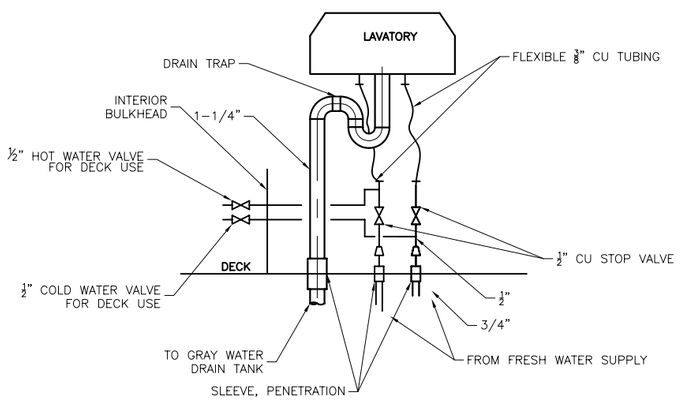

LAVATORY PIPING DETAIL
TYPICAL INSTALLATION
SCALE: N.T.S.

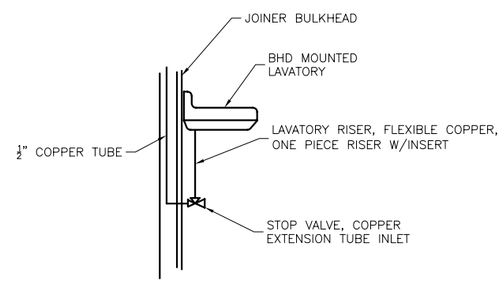

PROFILE VIEW, LAVATORY
TYPICAL INSTALLATION
SCALE: N.T.S.

ITEM	PART CODE	DESCRIPTION		QTY
11	LEVEL XMITTER	4-20MA LEVEL XMITTER	SS	1
10	DUPLEX STRAINER	HAYWARD 53 BTX, 1-1/2" DUPLEX STRAINER WITH 20 MESH SS BASKET, SCREWED	BRONZE	1
9	WATER COOLER	HALSEY-TAYLOR SCW4A FREE STANDING WATER COOLER, 4 GPH	SS	1
8	SINK	AMERICAN STANDARD FREE STANDING WORK SINK WITH SLOAN POLARIS SL 1121 FAUCET SET.	SS	1
7	SINK	AMERICAN STANDARD CULINAIRE 18 SINGLE BOWL SINK W/SLOAN POLARIS SL-2731SINGLE HANDLE FAUCET SET.	SS	2
6	LAVATORY	AMERICAN STANDARD COMRADE LAVATORY WITH SLOAN POLARIS SL-0871 FAUCET SET.	VITREOUS CHINA	4
5	LAVATORY	AMERICAN STANDARD 9141.011 ADA COMPLIANT LAVATORY W/SLOAN POLARIS 0892 FAUCET.	VITREOUS CHINA	1
4	VACUUM BREAK	1/2" VACCUUM BREAK, SCREWED	BRONZE	1
3	HOT WATER HTR.	RHEEM COMMERCIAL UNDER COUNTER WATER HEATER. 30 GAL., 240 V 1 PH 3 KW W/APPROVED T/P RELIEF VALVE	VARIOUS	1
2	FRESH WATER PUMP SET	FRESH WATER PRESSURE TANK AND PUMP SET. 80 GAL. CAPACITY, 15 GPM PUMP, 45 PSIG	VARIOUS	1
1	HOLDING TANK	FRESH WATER TANK 1800 GALLONS		1

BILL OF MATERIALS

STATE OF MAINE
JOHN A. HUNTER
NO. 10737
REGISTERED PROFESSIONAL ENGINEER
10-3-05

COLD WATER
HOT WATER
CONTROL OR INSTRUMENT CABLE/TUBE

NO.	REFERENCES
5	–
4	575-02-511, DOMESTIC HEATING SYSTEM DIAGRAM
3	575-02-506, TANK VENTS SYSTEM DIAGRAM
2	575-02-536, FRESH WATER COOLING SYSTEM DIAGRAM
1	575-02-528, DOMESTIC GREY & BLACK WATER SYSTEM DIAGRAM

APPROVALS:	SUBMIT DATE	APPROVED BY	APPROVED DATE	RE-SUBMIT DATE	APPROVED BY	APPROVED DATE
OWNER	–	–	–	–	–	–
USCG	–	–	–	–	–	–
ABS	–	–	–	–	–	–
USPHS	–	–	–	–	–	–

Seaworthy Systems, Inc.
P.O. BOX 965
ESSEX, CT 06426
USA
TEL: 860-767-9061
FAX: 860-767-1263
MARINE ENGINEERS NAVAL ARCHITECTS

CHECKED BY	AUTH. BY	SCALE
JAH 09-30-05	JAH 09-30-05	NONE
DRAWN BY JEK	ORIG. DATE 08-03-05	DIMS IN INCHES UNLESS OTHERWISE STATED

FOR
MAINE STATE FERRY SERVICE
P.O. BOX 645, 517A MAIN STREET
ROCKLAND, ME 04841-0645

TITLE 154' RO/RO/PASS FERRY

DOMESTIC WATER SUPPLY SYSTEM DIAGRAM

SIZE	DRG No.	REV.	SHEET
D	575-02-533	–	1 OF 2

SSI FILE No. s:\active\projnumb\575-02\575-02-533.dwg

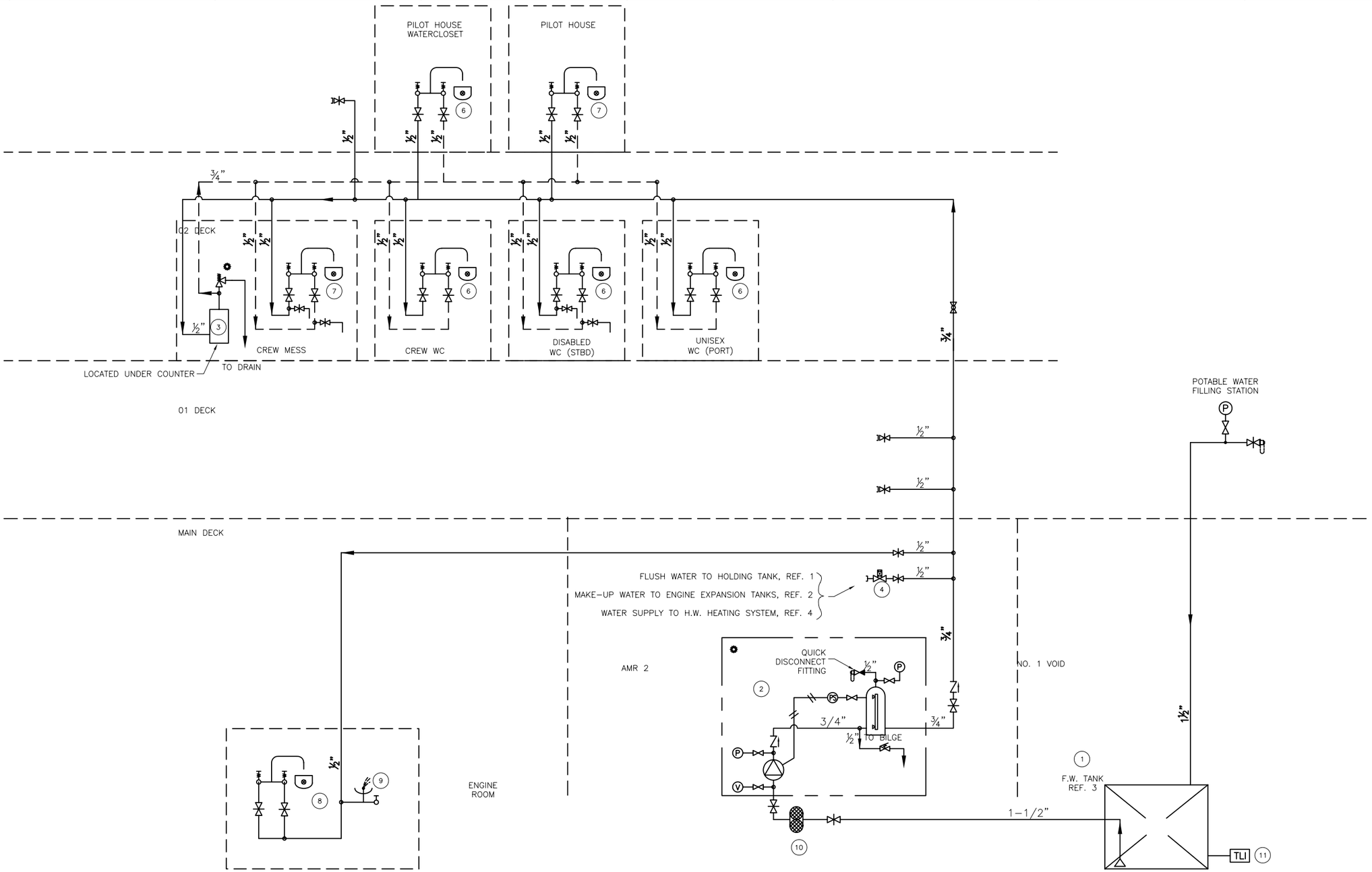

COLD WATER

HOT WATER

CONTROL OR INSTRUMENT CABLE/TUBE

Seaworthy Systems, Inc.
MARINE ENGINEERS NAVAL ARCHITECTS
P.O. BOX 965
ESSEX, CT 06426
USA
TEL: 860-767-9061
FAX: 860-767-1263

FOR
MAINE STATE FERRY SERVICE
P.O. BOX 645, 517A MAIN STREET
ROCKLAND, ME 04841-0645

TITLE
154' RO/RO/PASS FERRY

DOMESTIC WATER SUPPLY SYSTEM DIAGRAM

SCALE		SIZE	DRG No.	REV.	SHEET
N.T.S.	DIMS IN INCHES UNLESS OTHERWISE STATED	D	575-02-533	—	2 OF 2

SSI FILE No. s:\active\projnumb\575-02\575-02-533.dwg

232-03-223

MATERIAL SCHEDULE

SERVICE	DESIGN TEMP & PRESSURE	SIZE	PIPE	TAKEDOWN JOINTS				FITTINGS	VALVES	
				MATERIAL	GASKETS	BOLTING	NUTS		BODY	TRIM
FRESH WATER FOR ENGINE COOLING	50 PSIG AND 210° F	ALL	SMLS OR E.R.W. CARBON STL., ASM A106 GR B OR A53 GR B TY S OR E	FLGD & UNIONS, CARBON STL ASTM A105 SCRD UNIONS, BRONZE ASME SB61 OR SB62	RUBBER CLOTH INSERT	ASTM A307 GRADE B	ASTM A563 GRADE A	FLGD, CARBON STL ASTM A 234 GR WCB OR A105 S.W. OR THREADED, CARBON STEEL ASTM234 GR WPB SCRD, BRONZE ASTM SB61 OR SB62	BUTTERFLY WAFER, D.I. ASTM A395 FLGD OR B.W., CARBON STL ASTM A105 SCRD, BRONZE ASME SB61 OR SB62	S.S. OR BRONZE

ABBREVIATIONS

C.S.	CAST STEEL
D.I.	DUCTILE IRON
E.R.W.	ELECTRIC RESISTANCE WELDED
FGD.	FORGED
FLGD.	FLANGED
F.S.	FORGED STEEL
SCH.	SCHEDULE
SCRD.	SCREWED
SMLS.	SEAMLESS
S.S.	STAINLESS STEEL
S.W.	SOCKET WELD

SYMBOLS LIST

SYMBOL	DESCRIPTION	SYMBOL	DESCRIPTION
	PIPING		BUTTERFLY VALVE, WAFER TYPE, LUGGED
	GLOBE VALVE, SCREWED		3/8" HALF COUPLING WELDOLET, FOR TESTING
	BALL VALVE, SCREWED		VENT
	HORIZ SWING CK VLV, SCREWED		SUCTION BELLMOUTH
	THERMOMETER		FILTER, TEMPORARY COMMISSIONING, FLANGED
	ITEM SUPPLIED WITH PRINCIPLE COMPONENT		FLEXIBLE CONNECTION
	PUMP		PRESSURE GAUGE

REVISIONS

REV.	DATE	DESCRIPTION	SHEET	ZONE	AUTH.
A	–	–			
B	–	–			
C	–	–			
D	–	–			

GENERAL NOTES:

1. ALL MATERIALS, WORKMANSHIP AND INSTALLATION TO MEET THE REQUIREMENTS OF CFR 46 SUBCHAPTER H AND ABS, AND BE TO THE SATISFACTION OF THE USCG OCMI.

2. FINAL PIPING SIZES AND LENGTHS TO/FROM GRIDCOOLERS TO BE DETERMINED BY THE EXTERNAL RESISTANCE OF THE ENGINE DRIVEN PUMPS.

3. INSTALLATION OF KEEL COOLERS AND GUARDS TO BE IN ACCORDANCE WITH FERNSTRUM INSTRUCTIONS AND REFERENCE 5.

4. GRID COOLER TO BE FLUSH MOUNTED TO HULL, NOT IN A RECESS.

5. COOLER GUARD TO BE CONSTRUCTED OF 1/2" A36 PLATE AND WELDED. GUARD TO BE BLASTED AND COATED WITH SAME UNDERWATER COATING SCHEDULE AS HULL.

6. ALL HOLES CUT IN HULL TO BE SMOOTH, WITH NO RAGGED EDGES.

7. ALL MATERIALS TO BE GALVANICALLY COMPATIBLE TO ONE ANOTHER IN A MARINE ENVIRONMENT.

8. COFFERDAMS WILL BE INSTALLED ON ANY THROUGH HULL FASTENERS REQUIRED FOR MOUNTING THE GRIDCOOLER TO THE HULL. THE COFFERDAMS WILL BE CONSTRUCTED OF A SUITABLE DIAMETER SCH 80 PIPE AND ½" PLATE. COFFERDAMS SHALL HAVE AN ACCESS PLATE BOLTED TO AN ANSI 150# FLANGE.

9. FINAL INSTALLATION LOCATION OF GRIDCOOLERS TO BE DETERMINED BY THEIR PROXIMITY TO STRUCTURE, OTHER PIPING SYSTEMS AND OTHER INTERFERENCES. GRIDCOOLERS SHALL NOT BE MOUNTED DIRECTLY BENEATH ENGINES.

10. ½" COOLING PIPE VENT COCKS TO BE LOCATED AT THE HIGHEST POINTS OF COOLING WATER LINES TO FACILITATE FILLING OF SYSTEM.

11. GRID COOLER AND ZINC ANODES ARE NOT TO BE PAINTED.

12. TEMPORARY COMMISSIONING STRAINERS ARE TO BE INSTALLED ON THE INLET SIDE OF EACH GRID COOLER– 200%, 10 MESH.

12. FINAL KEEL COOLER PLACEMENT AND PIPING ARRANGEMENTS TO BE APPROVED BY OWNER.

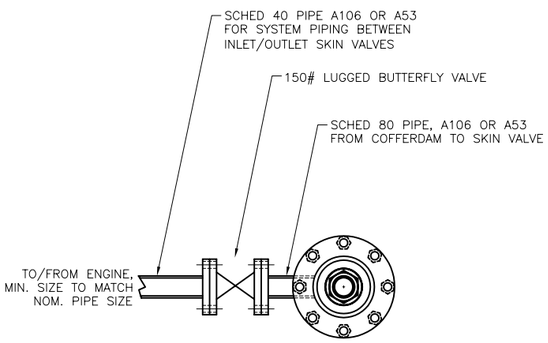

SECTION 7-B
COVER NOT SHOWN
SCALE: N.T.S.

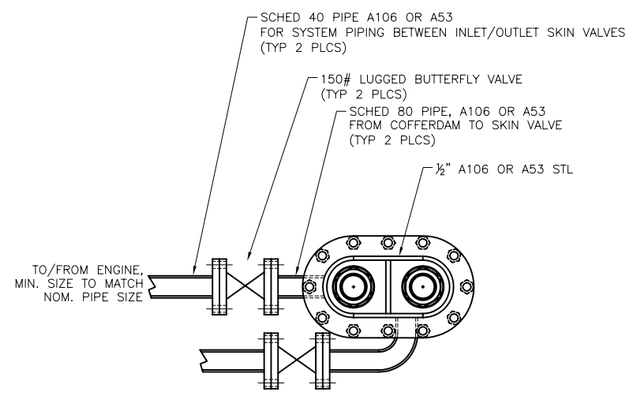

SECTION 5-B
TYPICAL
SCALE: N.T.S.

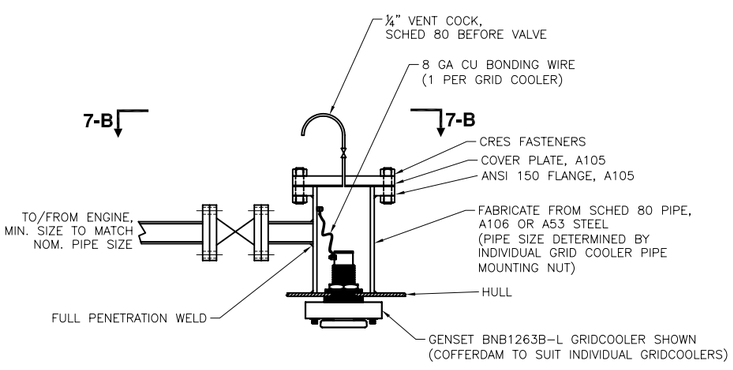

SINGLE PASS GRIDCOOLER COFFERDAM
TYPICAL (2 PLCS PER COOLER)
SCALE: N.T.S.

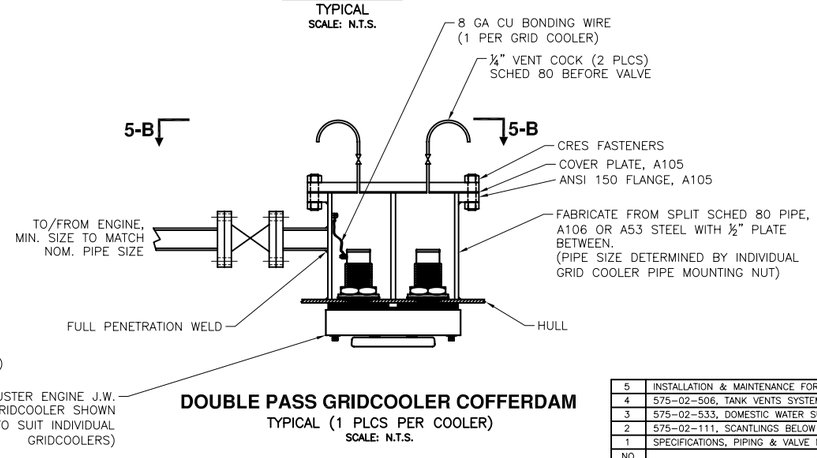

DOUBLE PASS GRIDCOOLER COFFERDAM
TYPICAL (1 PLCS PER COOLER)
SCALE: N.T.S.

STATE OF MAINE
JOHN A. HUNTER
NO. 10737
REGISTERED PROFESSIONAL ENGINEER
10-3-05

KEEL COOLER SIZING

KEEL COOLER	ESTIMATED FLOW RATE, REQUIRED HEAT REJECTION & TYPE
CAT C9 BOW THRUSTER ENGINE	76 GPM, 12,972 BTU/MIN (EST), DOUBLE PASS, HULL MOUNTED
CAT C9 BOW THRUSTER HPU HYDRAULIC OIL	60 GPM, 3,188 BTU/MIN (EST), DOUBLE PASS, HULL MOUNTED
NORTHERN LIGHTS M1066T GENSET	60 GPM, 4,452 BTU/MIN (EST), SINGLE PASS, HULL MOUNTED
CAT 3508B MAIN ENGINE AFTERCOOLER & GEAR	145 GPM, 9,748 BTU/MIN (EST), SINGLE PASS, HULL MOUNTED
CAT 3508B, MAIN ENGINE JACKET WATER	243 GPM, 17,824 BTU/MIN (EST), SINGLE PASS, HULL MOUNTED

BILL OF MATERIALS

ITEM	PART CODE	DESCRIPTION	QTY
14	TLI	GEMS SURESITE LEVEL INDICATOR	1
13	STEEL, A36	1/2" PLATE, FOR GRID COOLER GUARDS	A/R
12	–	PIPE, SCHED 40, ALL FW SYSTEM PIPING	A/R
11	–	BOW THRUST HYD OIL COOLER, FW COOLING CIRC. PUMP	1
10	–	COOLANT TRANSFER PUMP, 15 GPM	1
9		GENERATOR J.W. EXP. TANK, 10% OF REMOTE J.W. SYSTEM VOLUME	2
8		BOW THRUSTER J.W. EXP. TANK, 10% OF REMOTE J.W. SYSTEM VOLUME	1
7		M.E. AFTERCOOLER & GEAR AUX. EXP. TANK, 10% OF SYSTEM VOLUME	2
6	SHIPYARD FAB.	M.E. J.W. EXPANSION TANK, 10% OF REMOTE J.W. SYSTEM VOLUME	2
5	D16184U, FERNSTRUM	CAT C9, BOW THRUSTER ENGINE KEEL COOLER	1
4	D1299U, FERNSTRUM	CAT C9, BOW THRUSTER HPU HYD. OIL KEEL COOLER	1
3	BN1263B, FERNSTRUM	NORTHERN LIGHTS M1066T GENSET KEEL COOLER	2
2	D1099, FERNSTRUM	CAT 3508B MN ENG AFTERCOOLER & GEAR KEEL COOLER	2
1	D1457, FERNSTRUM	CAT 3508B, MN ENG JW KEEL COOLER	2

REFERENCES

NO.	
5	INSTALLATION & MAINTENANCE FORM 160, FERNSTRUM GRIDCOOLER
4	575–02–506, TANK VENTS SYSTEM DIAGRAM
3	575–02–533, DOMESTIC WATER SUPPLY SYSTEM DIAGRAM
2	575–02–111, SCANTLINGS BELOW MAIN DECK
1	SPECIFICATIONS, PIPING & VALVE MATERIAL STANDARDS

APPROVALS:	SUBMIT DATE	APPROVED BY	APPROVED DATE	RE–SUBMIT DATE	APPROVED BY	APPROVED DATE
OWNER	–	–	–	–	–	–
USCG	–	–	–	–	–	–
ABS	–	–	–	–	–	–
USPHS	–	–	–	–	–	–

Seaworthy Systems, Inc.
MARINE ENGINEERS NAVAL ARCHITECTS
P.O. BOX 965
ESSEX, CT 06426
USA
TEL: 860–767–9061
FAX: 860–767–1263

CHECKED BY	AUTH. BY	SCALE
JAH 09–30–05	WAW 09–30–05	AS SHOWN
DRAWN BY	ORIG. DATE	DIMS IN INCHES UNLESS OTHERWISE STATED
ERS	09–19–05	

FOR
MAINE STATE FERRY SERVICE
P.O. BOX 645, 517A MAIN STREET
ROCKLAND, ME 04841–0645

TITLE
154' RO/RO/PASS FERRY

FRESH WATER COOLING SYSTEM DIAGRAM

SIZE	DRG No.	REV.	SHEET
D	575–02–536	–	1 OF 3

SSI FILE No. s:\active\projnumb\575-02\575-02-536.dwg

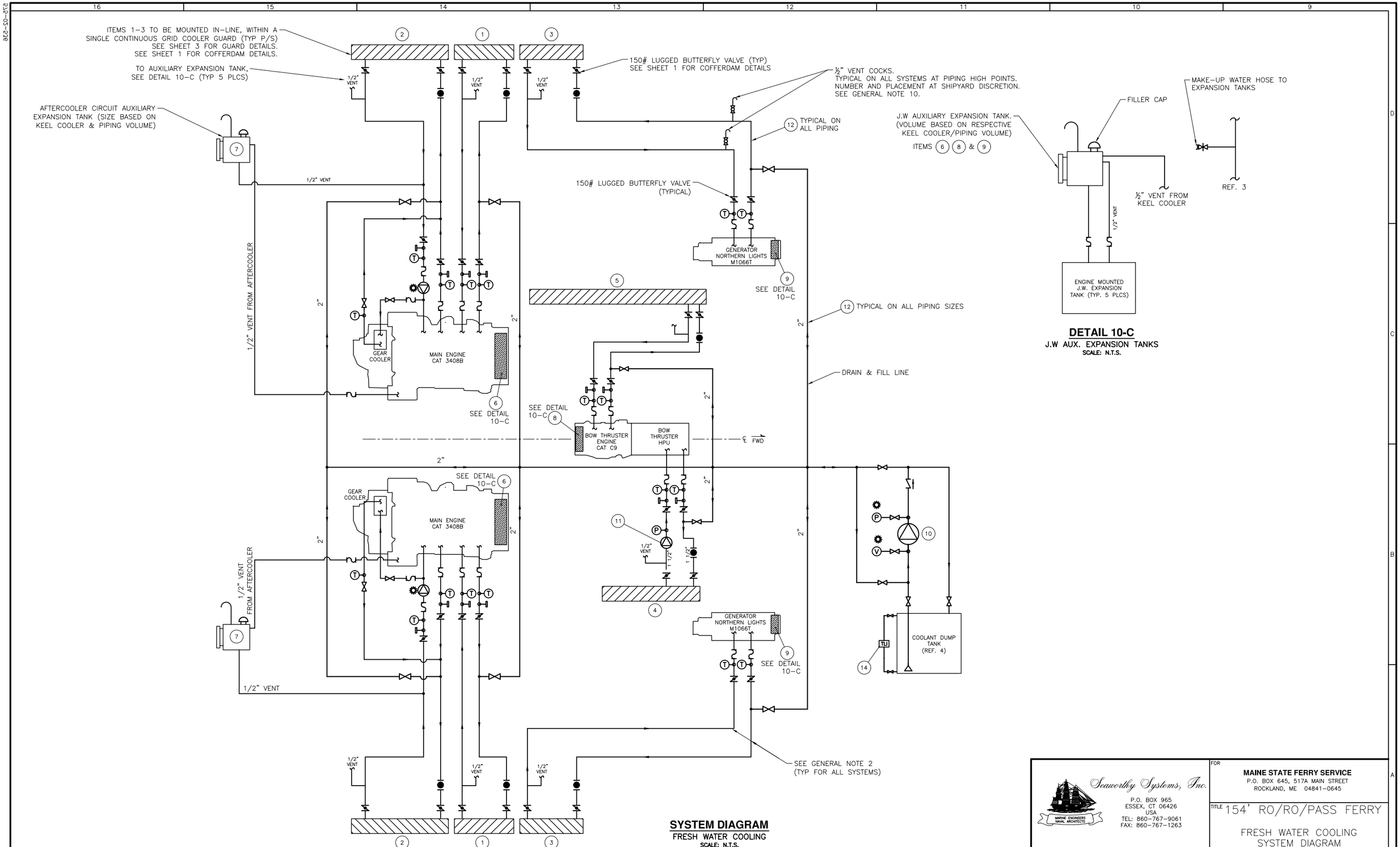

Seaworthy Systems, Inc.
MARINE ENGINEERS NAVAL ARCHITECTS
P.O. BOX 965
ESSEX, CT 06426
USA
TEL: 860–767–9061
FAX: 860–767–1263

FOR
MAINE STATE FERRY SERVICE
P.O. BOX 645, 517A MAIN STREET
ROCKLAND, ME 04841–0645

TITLE 154' RO/RO/PASS FERRY
FRESH WATER COOLING SYSTEM DIAGRAM

SCALE: AS SHOWN
DIMS IN INCHES UNLESS OTHERWISE STATED

SIZE	DRG No.	REV.	SHEET
D	575–02–536	—	2 OF 3

SSI FILE No. s:\active\projnumb\575–02\575–02–536.dwg

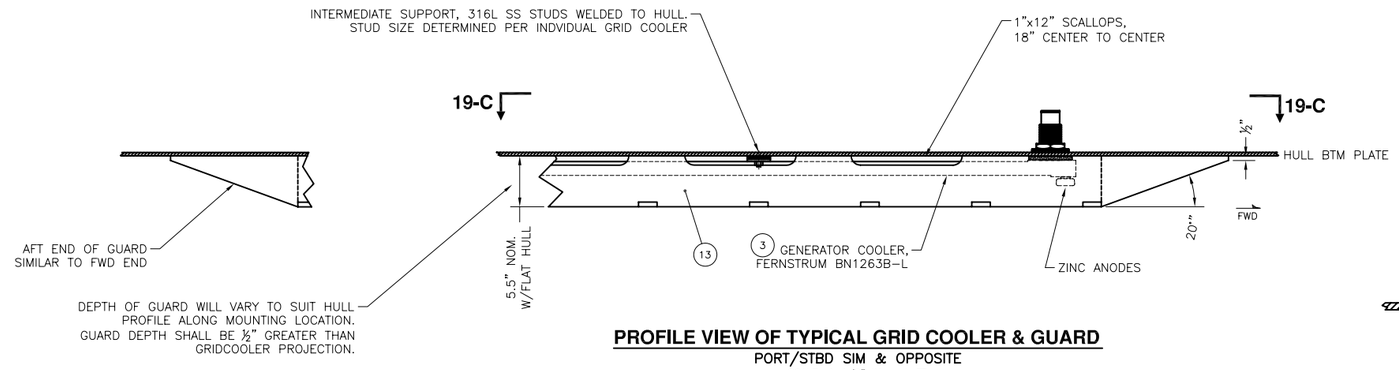

PROFILE VIEW OF TYPICAL GRID COOLER & GUARD

PORT/STBD SIM & OPPOSITE

SCALE: 1 1/2" IN = 1 FT

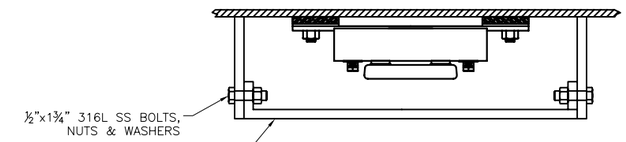

SECTION 17-D

SCALE: 3" IN = 1 FT

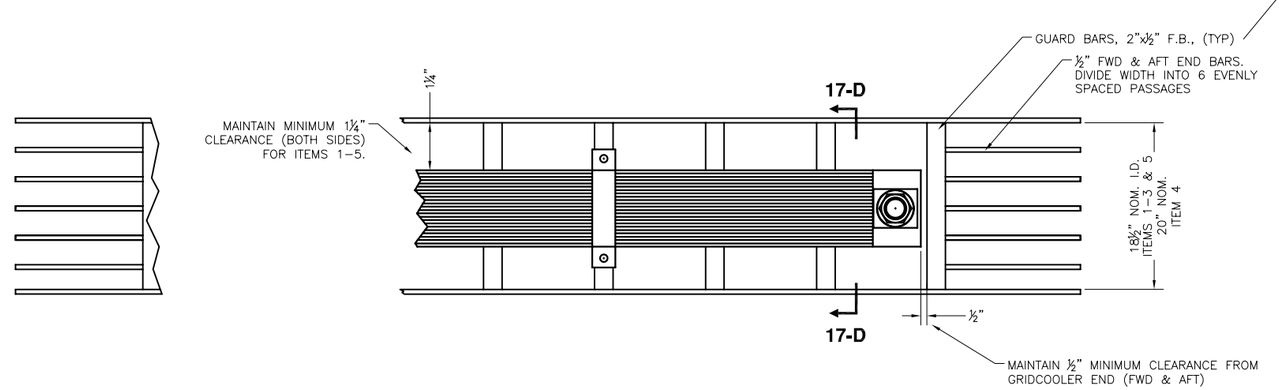

VIEW 19-C, PLAN VIEW OF TYPICAL GRID COOLER & GUARD

(HULL NOT SHOWN)

SCALE: 1 1/2" IN = 1 FT

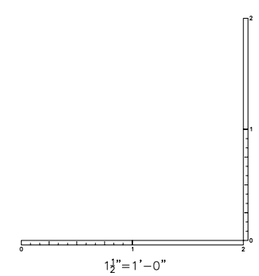

Seaworthy Systems, Inc.
MARINE ENGINEERS NAVAL ARCHITECTS
P.O. BOX 965
ESSEX, CT 06426
USA
TEL: 860-767-9061
FAX: 860-767-1263

FOR
MAINE STATE FERRY SERVICE
P.O. BOX 645, 517A MAIN STREET
ROCKLAND, ME 04841-0645

TITLE
154' RO/RO/PASS FERRY
FRESH WATER COOLING
SYSTEM DIAGRAM

SCALE		SIZE	DRG No.	REV.	SHEET
AS SHOWN	DIMS IN INCHES UNLESS OTHERWISE STATED	D	575-02-536	—	3 OF 3

SSI FILE No. s:\active\projnumb\575-02\575-02-536.dwg

MATERIAL SCHEDULE

SERVICE	DESIGN TEMP & PRESSURE	SIZE	PIPE	TAKEDOWN JOINTS				FITTINGS	VALVES	
				MATERIAL	GASKETS	BOLTING	NUTS		BODY	TRIM
LUBE OIL SYSTEM	100 F 65 PSIG	OVER 2"	SEAMLESS OR ERW STL ASTM A106 GR. B OR A53 GR. B	FLNGD SLIP-ON OR BUTTWELD, CARBON STL, ASTM A105	1/16" THK FULL-FACE NON-ASBESTOS	CARBON STL, ASTM A307 GR B	CARBON STL, ASTM A563 GR A	BUTTWELD, CARBON STL, ASTM A234 GR WPB S.W. OR SCRD., ASTM A234 GR WPB OR A105	FLGD, BUTTERFLY WAFER OR LUG, D.I. ASTM A395 OR CARBON STL ASTM A216 GR WCB (OR A105)	S.S. OR BRONZE
		2" AND BELOW		SCRD, CARBON STL, ASTM A105					SCRD, BRONZE, ASME SB61 OR SB62	S.S. OR BRONZE

SYMBOLS LIST

	SCREW-DOWN GLOBE VALVE		PRESSURE GAUGE
	BALL VALVE		SUCTION BELLMOUTH
	RELIEF VALVE		HOSE CONNECTOR C/W CAP & KEEP CHAIN
	SELF CLOSING DRAIN VALVE/ DRAIN OFF VALVE		FILLING FUNNEL C/W COVER & KEEP CHAIN
HLA	HIGH LEVEL ALARM	3/4"	LINE SIZE
LLA	LOW LEVEL ALARM		ITEM SUPPLIED W/PRINCIPAL COMPONENT
FM	FLOW METER		AIR PUMP
	SCREWED CAP PIPE TERMINAL		PNEUMATIC OPER. QUICK CLOSING VLV
TLI	TLI		

REVISIONS

REV.	DATE	DESCRIPTION	SHEET	ZONE	AUTH.
A	–	–			
B	–	–			
C	–	–			
D	–	–			

GENERAL NOTES:

1. ALL MATERIALS, WORKMANSHIP AND INSTALLATION TO MEET THE REQUIREMENTS OF CFR 46 SUBCHAPTER H AND ABS, AND BE TO THE SATISFACTION OF THE USCG OCMI.

2. ALL VALVES, COCKS AND CONNECTIONS SHALL BE READILY ACCESSIBLE FOR MAINTENANCE AND OPERATION. PIPE RUNS SHALL BE DESIGNED FOR EASY REMOVAL.

3. DRIP TRAYS/SAVEALLS TO BE FITTED AROUND ALL TANK VALVE ASSEMBLIES, PUMPS, FILTERS, ETC. AND DRAINED INTO A HEADER LEADING TO THE WASTE OIL TANK.

4. ALL TANK OUTLET VALVES SHOULD BE AS CLOSE TO TANK BULKHEAD AS PRACTICAL.

5. A SPARE ENGINE DRIVEN L.O. PUMP SHALL BE KEPT ON BOARD THE SHIP.

6. POSITION OF EQUIPMENT AND PIPING TO BE CONFIRMED BEFORE INSTALLATION.

7. PIPING PASSING THROUGH OIL OR WATERTIGHT BOUNDARIES SHALL BE FITTED WITH SLEEVES WELDED TO THE BOUNDARY AND THE PIPING.

8. HANGERS SHALL BE PROVIDED TO SUPPORT THE PIPING. HANGER LOCATIONS SHALL BE CHOSEN TO PREVENT VISIBLE PIPE VIBRATION.

9. EACH ENGINE IS EQUIPPED WITH A SELF-CONTAINED LUBRICATION SYSTEM.

10. DRAIN & VENT LINE SHALL BE INSTALLED AS SUCH TO ENSURE CONTINUOUS DRAINAGE.

11. PNEUMATIC OPERATED QUICK CLOSING VALVE TO OPERATE ON AIR SIGNAL FROM EMERGENCY STATION IN PILOTHOUSE.

STATE OF MAINE
JOHN A. HUNTER
NO. 10737
REGISTERED PROFESSIONAL ENGINEER
10-3-05

ITEM	PART CODE	DESCRIPTION	MATERIAL	QTY
9	QUICK CLOSING VALVE	3/4" PNEUMATIC OPERATED QUICK CLOSING VALVE	–	1
8	DRAIN VALVE	1" SELF-CLOSING DRAIN	–	1
7	LEVEL ALARM SWITCH	MOBREY TYPE M	SS	1
6	TLI	GEMS SURESITE LEVEL INDICATOR	SS	1
5	–	–	–	1
4	LUBE OIL STORAGE TANK	450 GAL.	–	1
3	AIR PUMP	ALEMITE 7216 INLINE XFER PUMP, 7 GPM	SS	1
2	HOSE REEL	ALEMITE 7880, 1/2" X 50' SPRING ASSIST REWIND – HOSE TO BE OF A TYPE APPROVED FOR OIL SERVICE C/W SELF CLOSING FILLING VALVE & NO DRIP NOZZLE		1
1	FLOW METER	3 TO 5 GPM MANUAL RESET W/CUMULATIVE READOUT, SUITABLE FOR LOW PRESS. GRAVITY SYSTEM, INSTALLED IN 3/4" NPS PIPE		1

BILL OF MATERIALS

NO.	REFERENCES
3	SPECIFICATIONS, PIPING & VALVE MATERIAL STANDARDS
2	575-02-506, TANK VENTS SYSTEM DIAGRAM
1	575-02-593, WASTE OIL & OILY WATER SYSTEM DIAGRAM

APPROVALS:	SUBMIT DATE	APPROVED BY	APPROVED DATE	RE-SUBMIT DATE	APPROVED BY	APPROVED DATE
OWNER	–	–	–	–	–	–
USCG	–	–	–	–	–	–
ABS	–	–	–	–	–	–
USPHS	–	–	–	–	–	–

Seaworthy Systems, Inc.
MARINE ENGINEERS NAVAL ARCHITECTS
P.O. BOX 965
ESSEX, CT 06426
USA
TEL: 860-767-9061
FAX: 860-767-1263

FOR
MAINE STATE FERRY SERVICE
P.O. BOX 645, 517A MAIN STREET
ROCKLAND, ME 04841-0645

CHECKED BY	AUTH. BY	SCALE
JAH 09-30-05	JAH 09-30-05	NONE
DRAWN BY	ORIG. DATE	
JEK	08-03-05	DIMS IN INCHES UNLESS OTHERWISE STATED

TITLE 154' RO/RO/PASS FERRY

LUBRICATING OIL SYSTEM DIAGRAM

SIZE	DRG No.	REV.	SHEET
D	575-02-543	–	1 OF 2

SSI FILE No. s:\active\projnumb\575-02\575-02-543.dwg

232-02-242

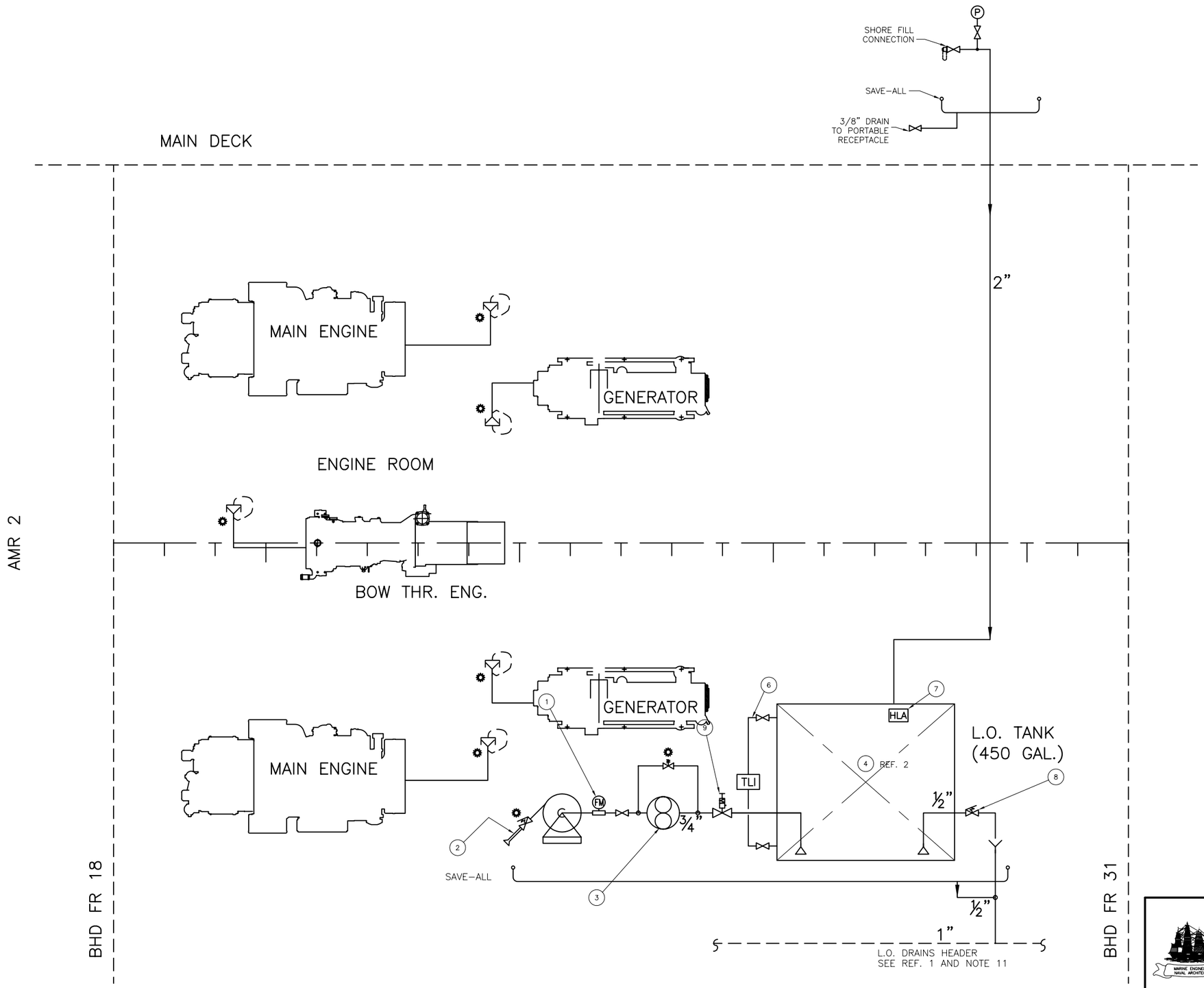

PLAN BELOW MAIN DECK

N.T.S.

Seaworthy Systems, Inc.
MARINE ENGINEERS NAVAL ARCHITECTS
P.O. BOX 965
ESSEX, CT 06426
USA
TEL: 860-767-9061
FAX: 860-767-1263

FOR
MAINE STATE FERRY SERVICE
P.O. BOX 645, 517A MAIN STREET
ROCKLAND, ME 04841-0645

TITLE 154' RO/RO/PASS FERRY

LUBRICATING OIL SYSTEM DIAGRAM

SCALE N.T.S.

DIMS IN INCHES UNLESS OTHERWISE STATED

SIZE	DRG No.	REV.	SHEET
D	575-02-543	—	2 OF 2

SSI FILE No. s:\active\projnumb\575-02\575-02-543.dwg

MATERIAL SCHEDULE

SERVICE	DESIGN TEMP & PRESSURE	SIZE	PIPE	TAKEDOWN JOINTS				FITTINGS	VALVES	
				MATERIAL	GASKETS	BOLTING	NUTS		BODY	TRIM
COMPRESSED AIR	100F, 150PSIG	1½" AND BELOW	SMLS. STL. ASTM A106 GR. B OR ASTM A53 GR. B SCH. 40 BLK.	3000# F.S. SCRD. UNION ASTM A105 GR. I OR II AND MSS-SP-83	1/16" THK. FULL-FACE NON-ASBESTOS W/ NITRILE BINDER	ALLOY STL. STUDS ASTM A193 GR. B7 FULL THD.	SEMI-FINISHED HEX HEAD ASTM A194 GR. 2H ANSI B18.2	3000# F.S. SCRD. OR S.W. ASTM A105 GR. I OR II ANSI B16.11	FORGED STL. ASTM A105 GR. II OR CAST STL. ASTM A216 GR. WCB ANSI B16.10	STN. STL.

SYMBOLS LIST

	SCREW-DOWN GLOBE VALVE	P	PRESSURE GAUGE
	BALL VALVE	PS	PRESSURE SWITCH
	S.D.N.R. GLOBE VALVE		'Y' STRAINER
S	SOLENOID VALVE		FLEXIBLE HOSE/CONNECTOR
	BALL VALVE WITH HOSE CONNECTION	LPA	LOW PRESSURE ALARM
	RELIEF VALVE (W/RELIEF PRESS. SETTING, PSI)	A	AUTOMATIC DRAIN
	PRESSURE REDUCING VALVE		AIR HORN

REVISIONS

REV.	DATE	DESCRIPTION	SHEET	ZONE	AUTH.
A	–	–			
B	–	–			
C	–	–			
D	–	–			

GENERAL NOTES:

1. ALL MATERIALS, WORKMANSHIP AND INSTALLATION TO MEET THE REQUIREMENTS OF CFR 46 SUBCHAPTER H AND ABS, AND BE TO THE SATISFACTION OF THE USCG OCMI.

2. ALL VALVES, COCKS AND CONNECTIONS SHALL BE READILY ACCESSIBLE FOR MAINTENANCE AND OPERATION. PIPE RUNS SHALL BE DESIGNED FOR EASY REMOVAL.

3. DRAIN & VENT LINES SHALL BE INSTALLED TO ENSURE CONTINUOUS DRAINAGE.

4. POSITION OF EQUIPMENT AND PIPING TO BE CONFIRMED BEFORE INSTALLATION.

5. PIPING PASSING THROUGH OIL OR WATERTIGHT BOUNDARIES SHALL BE FITTED WITH SLEEVES WELDED TO THE BOUNDARY AND THE PIPING.

6. HANGERS SHALL BE PROVIDED TO SUPPORT THE PIPING. HANGER LOCATIONS SHALL BE CHOSEN TO PREVENT VISIBLE PIPE VIBRATION.

7. ALL AIR SERVICE EQUIPMENT IS TO BE CONFIRMED WITH CERTIFIED VENDOR INFORMATION.

8. STARTING AIR COMPRESSORS AND RECEIVERS ARE TO HAVE SUFFICIENT CAPACITY TO PROVIDE A MINIMUM OF EIGHT CONSECUTIVE STARTS FOR ONE ENGINE.

9. AIR COMPRESSORS SHALL BE SIZED TO RECHARGE THE AIR RECIEVERS FROM ATMOSHERIC PRESSURE TO 150 PSIG WITHIN 1 HOUR, BOTH COMPRESSORS RUNNING.

10. ALL AIR PIPING IS TO BE THOROUGHLY BLOWN OUT WITH COMPRESSED AIR PRIOR TO INSTALLING FINAL CONNECTIONS TO AIR COMPRESSORS, PRESSURE REDUCING STATIONS, MACHINERY CONTROLS, ETC.

STARTING AIR RECEIVERS

	MAIN ENGINE	BOW THRUSTER ENGINE
AIR CONSUMPTION OF ENGINE'S STARTER MOTOR	Vs = 12.7 FT3/S	8.5 FT3/S
TOTAL CRANKING TIME FOR 8 STARTS	T = 21 SEC	9 SEC
ATMOSPHERIC PRESSURE	Pa = 14.7 PSI	14.7 PSI
INITIAL STORAGE TANK PRESSURE	Pt = 165 PSI	165 PSI
MINIMUM STORAGE TANK PRESSURE	Pmin = 80 PSI	80 PSI
REQUIRED VOLUME (Vs * T) (Pa) / (Pt – Pmin) =	46.3 CU.FT.	13.2 CU.FT.

TOTAL VOLUME = 46.3 + 13.2 = 59.5 CU.FT. – USE TWO RECEIVERS, 32 CU.FT. EACH

STARTING AIR COMPRESSORS

TOTAL STORAGE VOLUME	64 CU. FT.
TIME TO RECHARGE	T = 60 MINUTES
REC. AIR MASS AT ATMOS. PRESS. (85F)	M1 = 1/13.7 X 64 = 4.7 LB
REC. AIR MASS AT 150 PSIG (85F)	M2 = 1/1.22 X 64 = 52.4
AIR REC. MASS CHANGE, 0 TO 150 PSIG	M = 52.4–4.7 = 47.7 LB
MASS FLOW RATE, 0–150 PSIG	Mflow= 47.7/60 = 0.79 LB/MIN
VOL. FLOW RATE	Vflow = 0.79 X 13.7 = 10.9 SCFM

STATE OF MAINE JOHN A. HUNTER NO. 10737 REGISTERED PROFESSIONAL ENGINEER 10-3-05

ITEM	PART CODE	DESCRIPTION	MATERIAL	QTY
6	AIR DRYER	HANKISON HPR5-10 COMPRESSED AIR DRYER W/AUTO DRAIN	VARIOUS	1
5	PRESSURE SWITCH	PRESSURE SWITCH, 300 PSI RATED, FORM C CONTACTS	VARIOUS	3
4	WHIS./HORN	KAHLENBERG SH-2CHT SOLENOID AIR HORN	BRONZE	2
3	AIR FLASK	1 CUBIC FOOT AIR FLASK WITH RELIEF VALVE, 175 PSIG WP	CS	1
2	STARTING AIR REC.	240 GAL. HORIZONTAL, WITH RELIEF VALVE,175 PSIG WP. ASME STAMP, 1" OUTLET, AUTOMATIC AND MANUAL DRAIN VALVES, ASME STAMP	CS	2
1	AIR COMPRESSOR	SPEEDAIRE 2 CYL, 2 STAGE AIR COMP. 17.5 SCFM, 150 PSIG, W/PRESS. LUBRICATION, NEMA 1 STARTER, PRESS. CONT.	VARIOUS	2

BILL OF MATERIALS

NO.	REFERENCES
5	–
4	–
3	–
2	–
1	–

APPROVALS:	SUBMIT DATE	APPROVED BY	APPROVED DATE	RE-SUBMIT DATE	APPROVED BY	APPROVED DATE
OWNER	–	–	–	–	–	–
USCG	–	–	–	–	–	–
ABS	–	–	–	–	–	–
USPHS	–	–	–	–	–	–

Seaworthy Systems, Inc.
MARINE ENGINEERS NAVAL ARCHITECTS
P.O. BOX 965
ESSEX, CT 06426
USA
TEL: 860-767-9061
FAX: 860-767-1263

FOR
MAINE STATE FERRY SERVICE
P.O. BOX 645, 517A MAIN STREET
ROCKLAND, ME 04841-0645

TITLE 154' RO/RO/PASS FERRY

COMPRESSED AIR SYSTEM DIAGRAM

CHECKED BY	AUTH. BY	SCALE
JAH 09-30-05	JAH 09-30-05	NONE
DRAWN BY	ORIG. DATE	
JEK	08-03-05	DIMS IN INCHES UNLESS OTHERWISE STATED

SIZE	DRG No.	REV.	SHEET
D	575-02-551	–	1 OF 2

SSI FILE No. s:\active\projnumb\575-02\575-02-551.dwg

212-03-221

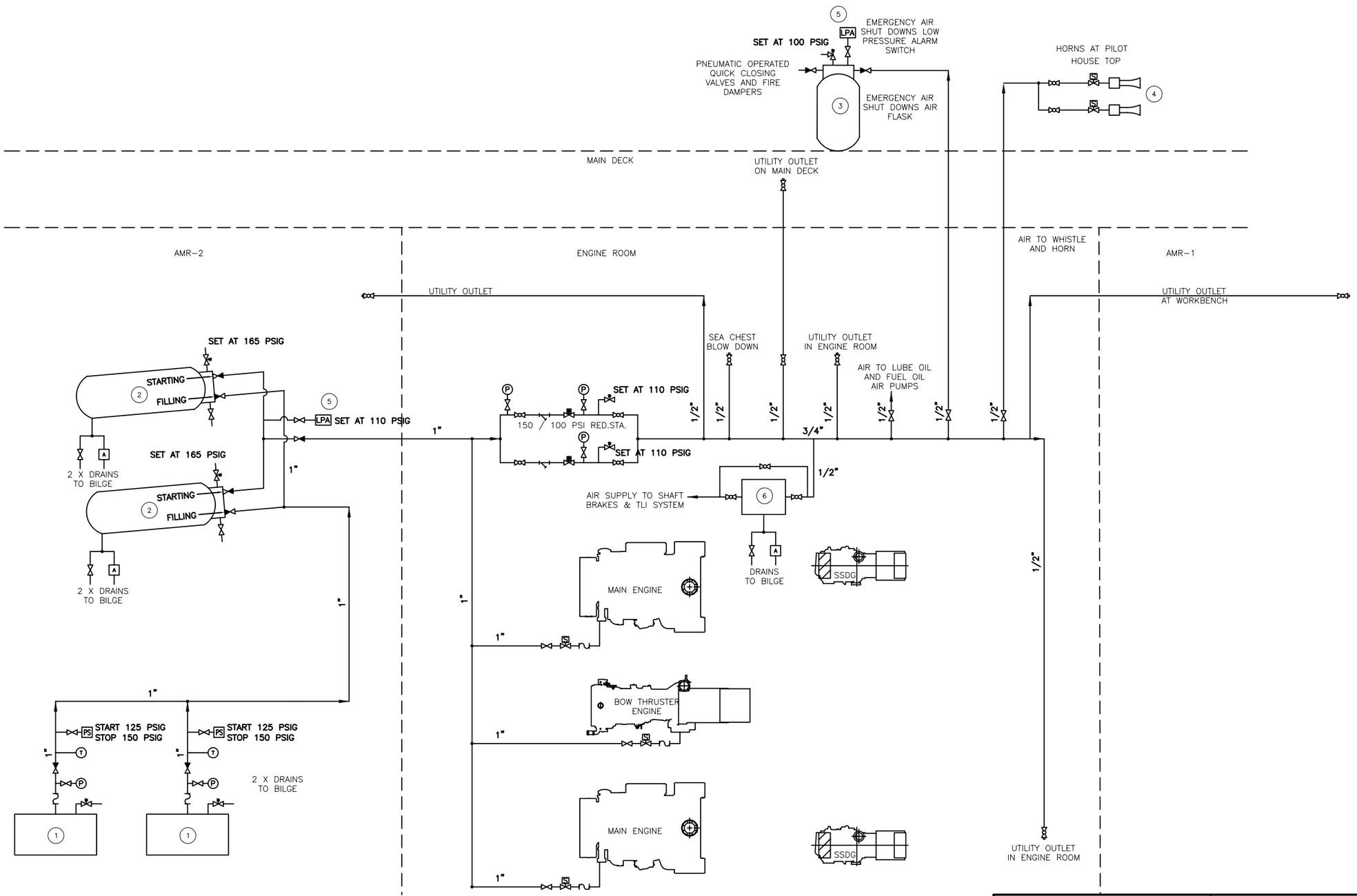

Seaworthy Systems, Inc.
MARINE ENGINEERS NAVAL ARCHITECTS
P.O. BOX 965
ESSEX, CT 06426
USA
TEL: 860-767-9061
FAX: 860-767-1263

FOR
MAINE STATE FERRY SERVICE
P.O. BOX 645, 517A MAIN STREET
ROCKLAND, ME 04841-0645

TITLE 154' RO/RO/PASS FERRY

COMPRESSED AIR SYSTEM DIAGRAM

SCALE N.T.S.

DIMS IN INCHES UNLESS OTHERWISE STATED

SIZE	DRG No.	REV.	SHEET
D	575-02-551	—	2 OF 2

SSI FILE No. s:\active\projnumb\575-02\575-02-551.dwg

DO NOT SCALE, IF IN DOUBT ASK

REVISIONS					
REV.	DATE	DESCRIPTION	SHEET	ZONE	AUTH^{D}
A	–	–			
B	–	–			
C	–	–			
D	–	–			

GENERAL NOTES:

1. ALL MATERIALS, WORKMANSHIP AND INSTALLATION TO MEET THE REQUIREMENTS OF CFR 46 SUBCHAPTER H AND BE TO THE SATISFACTION OF THE USCG OCMI.

2. ALL DIMENSIONS ARE APPROXIMATE AND SHOULD BE VERIFIED IN THE FIELD PRIOR TO INSTALLATION.

ITEM	PART CODE	DESCRIPTION	MATERIAL	QTY
17	–	3/4" BRACKET, 2" x 4"	–	???
16	–	SPLIT BEARING RETAINING RING, 14" OD; 10.85" ID; 3/8" THK HELD IN PLACE WITH (8) 1/2" 316L BOLTS	–	1
15	–	BEARING (1 PIECE), THORDON SXL, 9.85" ID, 11.85" OD, 9" LONG	–	1
14	–	BRONZE LINER, 8.85" ID; 9.85" OD; 12" LONG	–	1
13	–	RUDDER TRUNK TUBE, 14" OD; 11.5" ID; 2'–9" LONG	–	1
12	–	TUBE, 9" OD; 7" ID, 7" LONG	–	1
11	–	CARRIER BEARING– THORDON SXL 6.5" ID; 7" OD; 6" LONG	–	1
10	–	1/4" O–RING SEAL	–	1
9	–	3/4" RING, 14" OD; 9" ID	–	1
8	–	1/2" STUDS WITH NUTS	–	8
7	–	???SIZE???? SPLIT TILLER BOSS	–	1
6	–	3/4" SPLIT KEEPER KEY, 5" ID; 10" OD	–	1
5	–	1" SHOULDER EYE BOLT	–	1
4	–	1/2" BOLTS	–	4
3	–	8 7/8" RUDDER STOCK	–	A/R
2	–	3/4" THK ????Material????	–	A/R
1	–	2" THK ???MATERIAL????	–	A/R

BILL OF MATERIALS

STATE OF MAINE
JOHN A. HUNTER
NO. 10737
REGISTERED PROFESSIONAL ENGINEER
10-3-05

NO.	REFERENCES
3	–
2	–
1	–

APPROVALS:	SUBMIT DATE	APPROVED BY	APPROVED DATE	RE–SUBMIT DATE	APPROVED BY	APPROVED DATE
OWNER	–	–	–	–	–	–
USCG	–	–	–	–	–	–
ABS	–	–	–	–	–	–
USPHS	–	–	–	–	–	–

Seaworthy Systems, Inc.
MARINE ENGINEERS NAVAL ARCHITECTS
P.O. BOX 965
ESSEX, CT 06426
USA
TEL: 860–767–9061
FAX: 860–767–1263

FOR
MAINE STATE FERRY SERVICE
P.O. BOX 645, 517A MAIN STREET
ROCKLAND, ME 04841–0645

CHECKED BY	AUTH^{D} BY	SCALE
JAH 09–30–05	JAH 09–30–05	AS STATED
DRAWN BY	ORIG^{L} DATE	
ED/LAG	9–8–05	DIMS IN INCHES UNLESS OTHERWISE STATED

TITLE 154' RO/RO/PASS FERRY

RUDDER ARRANGEMENT

SIZE	DRG No.	REV.	SHEET
D	575–02–562	–	1 OF 2

SSI FILE No. s:\active\projnumb\575–02\575–02–562.dwg

NOTES
1. RUDDER DESIGN SPEED AHEAD 14.0K, ASTERN 7.0K
2. MAX ANGLE 35°
3. RUDDER AREA = 25.72 SQFT
4. ALL STEEL ABS GRADE A OR EQUAL; STOCK, FLANGES, BOLTS, NUTS ABS GR2 FORGINGS OR EQUAL
5. MAXIMUM RUDDER HYDRODYNAMIC TORQUE 59,600 LB–IN
6. C.L. OF RUDDER STOCK PENETRATES HULL 8" AFT FR68, 6'–9" OFF C.L. P&S
7. SHIPYARD TO PROVIDE INTERNAL RUDDER STOPS @ 36½°
8. ALL WELDING TO ABS RULES EXCEPT AS NOTED

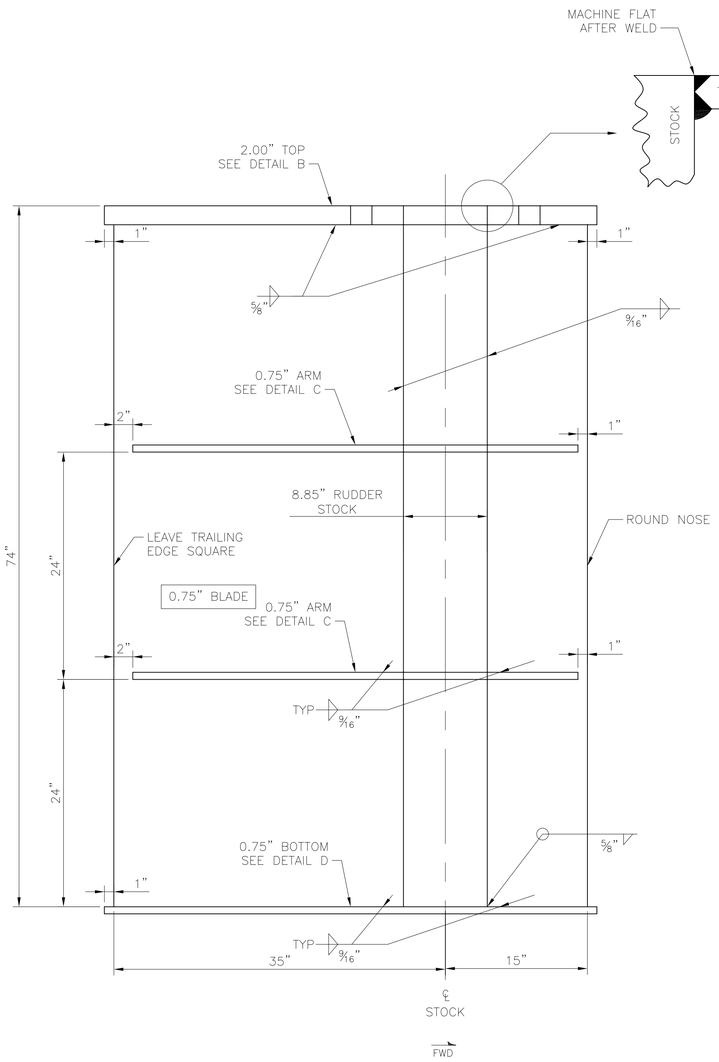

DETAIL A
RUDDER PROFILE VIEW
SCALE: 1 1/2 IN = 1 FT

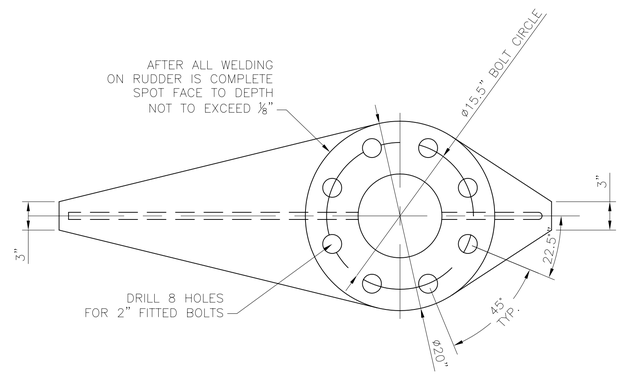

DETAIL B
TOP ARM COUPLING FLANGE
SCALE: 1 1/2 IN = 1 FT

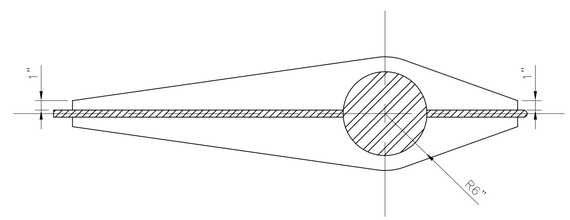

DETAIL C
TYPICAL MIDDLE ARM
SCALE: 1 1/2 IN = 1 FT

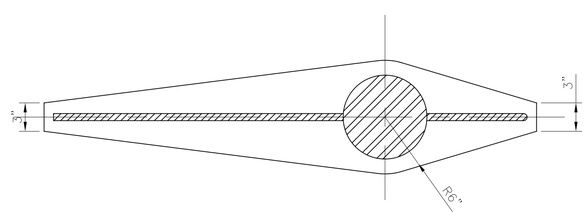

DETAIL D
BOTTOM ARM
SCALE: 1 1/2 IN = 1 FT

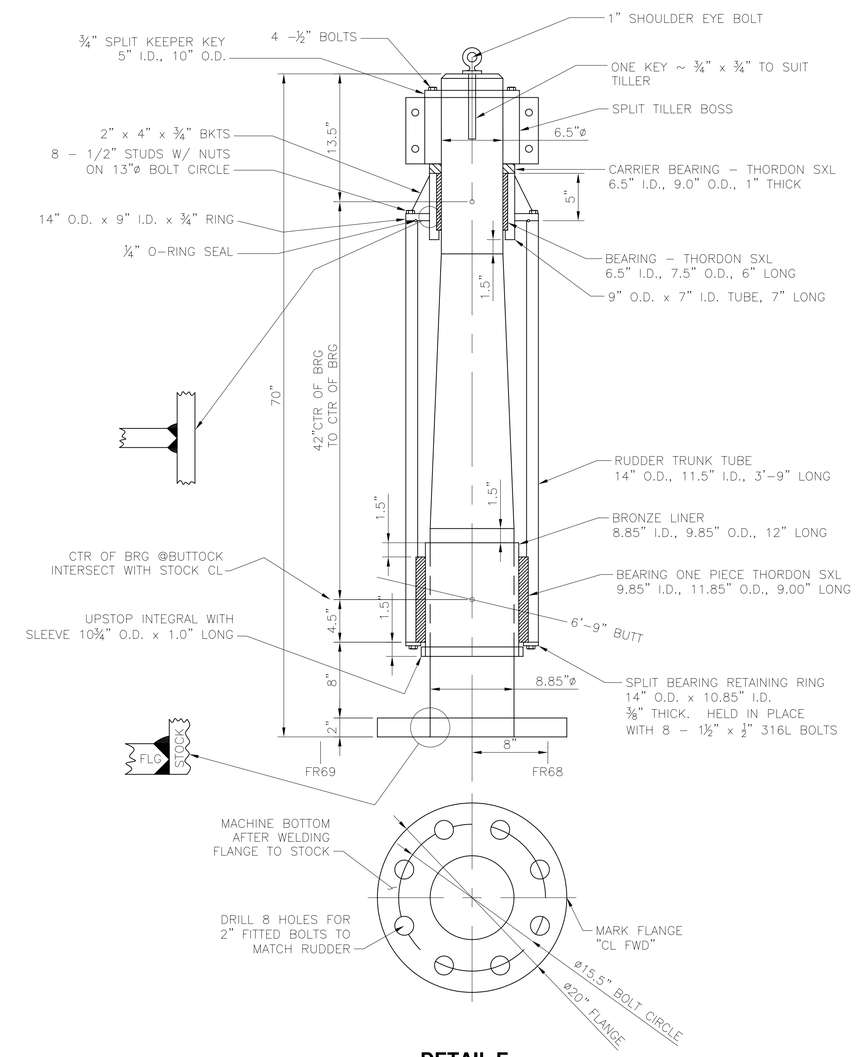

DETAIL E
RUDDER STOCK DETAIL
SCALE: 1 1/2 IN = 1 FT

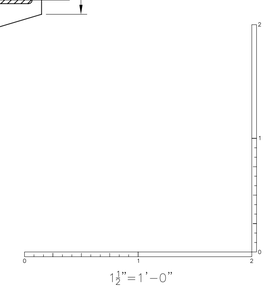

Seaworthy Systems, Inc.
MARINE ENGINEERS NAVAL ARCHITECTS
P.O. BOX 965
ESSEX, CT 06426
USA
TEL: 860–767–9061
FAX: 860–767–1263

FOR
MAINE STATE FERRY SERVICE
P.O. BOX 645, 517A MAINE ST
ROCKLAND, ME 04841–0645

TITLE 154' RO/RO/PASS FERRY

RUDDER ARRANGEMENT

SCALE		SIZE	DRG No.	REV.	SHEET
AS STATED	DIMS IN INCHES UNLESS OTHERWISE STATED	D	575–02–562	–	2 OF 2

SSI FILE No. s:\active\projnumb\575-02\Drafting\Active\575-02-562.dwg

MATERIAL SCHEDULE

SERVICE	DESIGN TEMP & PRESSURE	SIZE	PIPE	TAKEDOWN JOINTS				FITTINGS	VALVES	
				MATERIAL	GASKETS	BOLTING	NUTS		BODY	TRIM
HYDRAULIC SERVICE	150 PSIG AND 120 DEG F	1–1/4" TO 2"	SEAMLESS SCHEDULE 40 A 106 GR. B PIPE	CS FLANGES, WELDNECK OR SOCKET WELD OR SCREWED	NON–ASBESTOS SHEET PACKING	CrMo ASTM A193 BOLTS/STUDS Gr. B7	CS ASTM A194 NUTS Gr. 2H	BUTT WELD ASTM A234Gr. WPB OR SOCKETWELD ASTM A234 Gr. WPB OR A 106 OR SCREWED	SCREWED OR FLANGED OR BUTT WELD CS ASTM A 216 Gr. WCB OR A 105 OR SOCKETWELD ASTM A 234 Gr. WPB OR A 105	STEM/WEDGE/ DISC/SEAT RING CRES ASTM A 182 Gr. F6A INTEGRAL SEAT SAME AS VALVE BODY
	3000 PSIG AND 120 DEG F	1" AND BELOW	SEAMLESS XS AND XXS A 106 GR. B PIPE	CS WELDNECK OR SOCKETWELD FLANGES, UNIONS: FLARED, FLARELESS, COMPRESSION	METAL TO METAL, O–RING, FLEXITALLIC			SOCKETWELD ASTM A234 Gr. WPB OR A 106 OR JIC FLARE, FLARELESS COMPRESSION	JIC FLARED, OR FLARELESS COMPRESSION	

ABBREVIATIONS

C.S.	CAST STEEL
D.I.	DUCTILE IRON
E.R.W.	ELECTRIC RESISTANCE WELDED
FGD.	FORGED
FLGD.	FLANGED
F.S.	FORGED STEEL
SCH.	SCHEDULE
SCRD.	SCREWED
SMLS.	SEAMLESS
S.S.	STAINLESS STEEL
S.W.	SOCKET WELD

SYMBOLS LIST

SYMBOL	DESCRIPTION	SYMBOL	DESCRIPTION
	PIPING		FLEXIBLE HOSE
	FLOWMETER		

REVISIONS

REV.	DATE	DESCRIPTION	SHEET	ZONE	AUTH#
A	–	–			
B	–	–			
C	–	–			
D	–	–			

GENERAL NOTES:

1. ALL MATERIALS, WORKMANSHIP AND INSTALLATION TO MEET THE REQUIREMENTS OF CFR 46 SUBCHAPTER H AND BE TO THE SATISFACTION OF THE USCG OCMI

2. HOSES SHALL BE APPROVED BY THE USCG AND NOT EXCEED 30" IN LENGTH, UNLESS RELATIVE MOTION OF MACHINERY COMPONENTS DICTATES OTHERWISE.

3. HOSES SHALL BE RATED FOR USE BY THE FLUID AND THE WORKING PRESSURE OF THE SYSTEM. HOSES SHALL BE USED TO ISOLATE HYDRAULIC COMPONENTS AND ANY OTHER FIXED HYDRAULIC EQUIPMENT FROM VIBRATION.

4. HOSES SHALL BE ASSEMBLED USING CRIMP ON ENDS IN ACCORDANCE WITH MANUFACTURER'S SPECIFICATIONS.

5. HOSES SHALL BE FREE OF KINKS, TWISTS AND THE BEND RADII SHALL NOT BE LESS THAN SPECIFIED BY THE HOSE MANUFACTURER.

6. HYDRAULIC PIPING SHALL BE RATED FOR THE WORKING PRESSURE OF THE SYSTEM.

7. HYDRAULIC PIPING SHALL BE SIZED TO LIMIT SUCTION FLOW VELOCITIES TO 4 FPS AND DISCHARGE FLOW VELOCITIES TO 15 FPS.

8. JIC OR O–RING BOSS FITTINGS SHALL BE USED FOR ALL FLEXIBLE HOSES 1/2" AND ABOVE. SCREWED FITTINGS MAY BE USED FOR HOSE FITTINGS BELOW 1/2" IPS PROVIDED AN ANEROBIC SEALER IS USED TO SEAL THE THREADS.

9. HYDRAULIC PIPING SHALL BE PROPERLY SUPPORTED THROUGHOUT ITS LENGTH.

10. A SUFFICIENT NUMBER OF EXPANSION BENDS SHALL BE PROVIDED TO LIMIT LONGITUDINAL STRESS OF ANY LONG STRAIGHT PIPE RUN.

11. WHEN USING CARBON STEEL PIPE, THE PIPING MUST BE PICKLED, NEUTRALIZED, AND FLUSHED TO REMOVE ALL PIPE SCALE. ALL HOSES, TUBING, FITTINGS AND PIPING MUST BE CLEANED THOROUGHLY PRIOR TO FILLING THE SYSTEM WITH HYDRAULIC OIL.

12. INSTALLATION SHALL BE IN ACCORDANCE REFERENCE 1.

13. ALL PIPING TO BE HYDROSTATICALLY TESTED AT NOT LESS THAN 150% OF DESIGN PRESSURE.

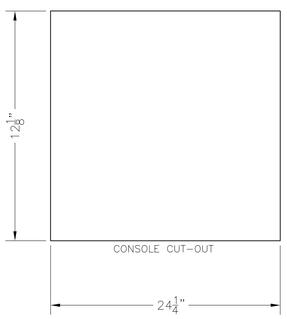

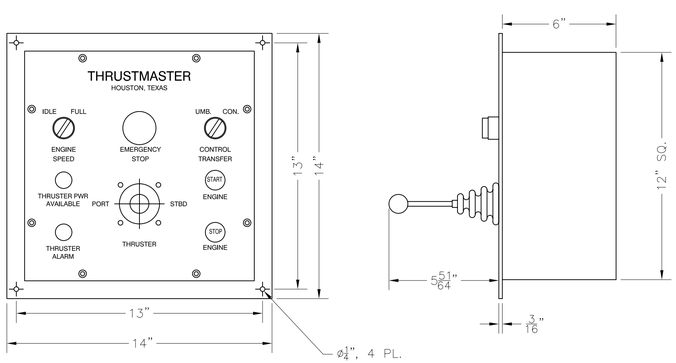

DETAIL 8-A

BOW THRUSTER BRIDGE CONSOLE

SCALE: 3 IN = 1 FT

DO NOT SCALE, IF IN DOUBT ASK

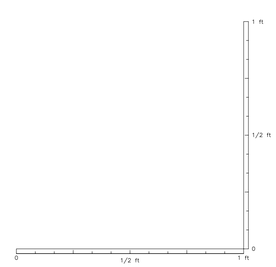

3"=1'–0"

PIPING SYSTEM	DESIGN PRESSURE @ 180° F
MAIN PUMP SYSTEM LINES	3000 PSIG
THRUSTER DRAIN AND FLUSH LINES	300 PSIG

STATE OF MAINE
JOHN A. HUNTER
NO. 10737
REGISTERED PROFESSIONAL ENGINEER

10-3-05

ITEM	PART CODE	DESCRIPTION	MATERIAL	QTY
10	–		–	A/R
9	–		–	1
8	–		–	A/R
7	–	3/4" HOSE SAE 100R1 TYPE AT	–	A/R
6	–	1 1/2" HOSE, SAE 100R13	–	A/R
5	–	1" HOSE, SAE 100R1 TYPE AT	–	A/R
4	–	1" SCH40 PIPE	–	A/R
3	–	2" SCH160 PIPE	–	A/R
2	36TT250L	TUNNEL THRUSTER, 250 HP, HYD., THRUSTMASTER OF TX	STL	1
1	CAT C9/SD 250	THRUSTER HPU SKID, ENG, HPU & RSVR, THRUSTMASTER OF TX	VAR	1

BILL OF MATERIALS

NO.	REFERENCES
3	SCANTLINGS BELOW MAIN DECK, 154' PASS. FERRY, DWG NO. 575–02–111
2	OUTLINE DWG, TUNNEL THRUSTER, 36TT250L, THRUSTMASTER OF TX DWG. NO. B103163–F, REV A, 8/03/05
1	INSTALLATION PROCEDURES, OPER. & MAINTENANCE MANUAL, HYDRAULIC TUNNEL THRUSTERS, SECTION 3, THRUSTMASTER OF TEXAS

APPROVALS:	SUBMIT DATE	APPROVED BY	APPROVED DATE	RE–SUBMIT DATE	APPROVED BY	APPROVED DATE
OWNER	–	–	–	–	–	–
USCG	–	–	–	–	–	–
ABS	–	–	–	–	–	–
USPHS	–	–	–	–	–	–

Seaworthy Systems, Inc.
MARINE ENGINEERS NAVAL ARCHITECTS
P.O. BOX 965
ESSEX, CT 06426
USA
TEL: 860–767–9061
FAX: 860–767–1263

FOR

MAINE STATE FERRY SERVICE
P.O. BOX 645, 517A MAIN STREET
ROCKLAND, ME 04841–0645

TITLE 154' RO/RO/PASS FERRY

BOW THRUSTER ARRANGEMENT

CHECKED BY	AUTH° BY	SCALE
JAH 09–30–05	JAH 09–30–05	AS STATED
DRAWN BY	ORIG° DATE	
ERS	09–12–05	DIMS IN INCHES UNLESS OTHERWISE STATED

SIZE	DRG No.	REV.	SHEET
D	575–02–568	–	1 OF 2

SSI FILE No. s:\active\projnumb\575–02\drafting\active\575–02–568.dwg

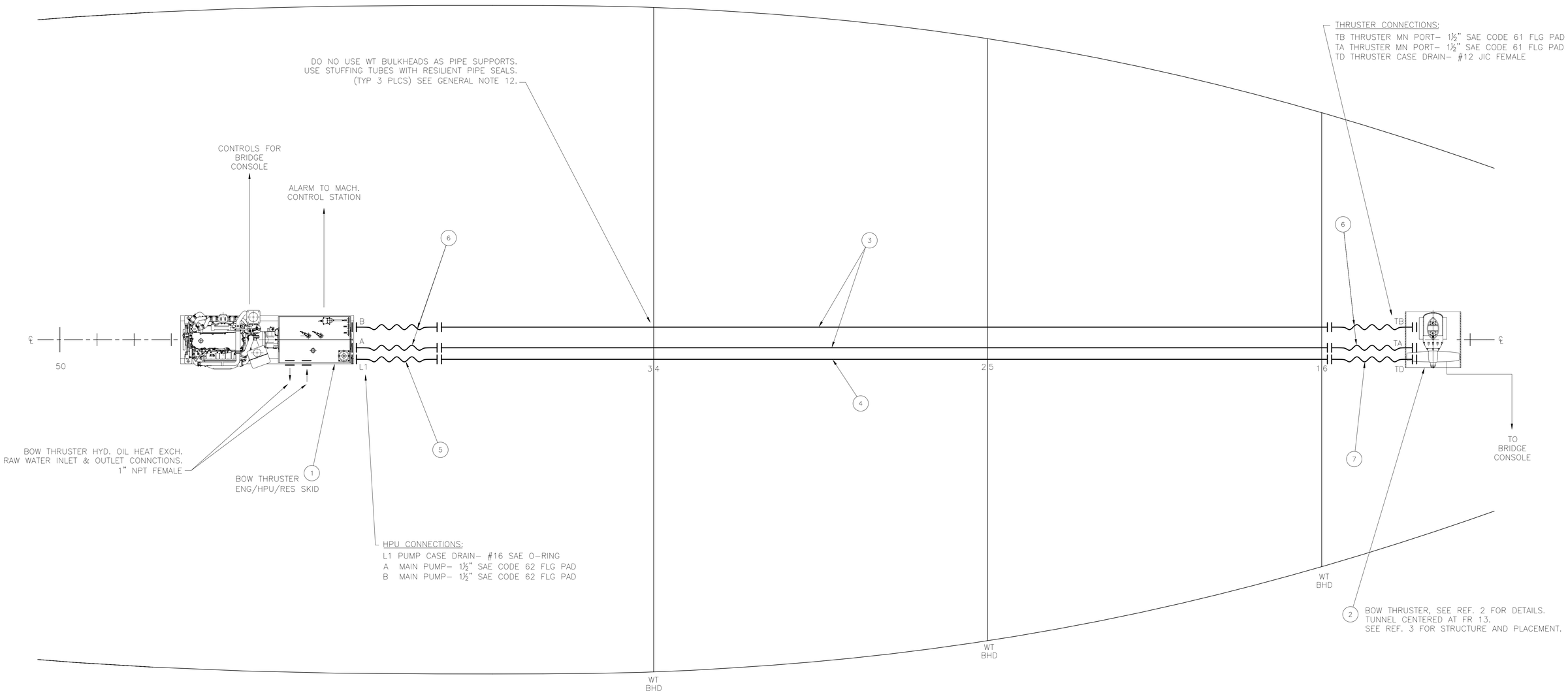

PLAN VIEW

BOW THRUSTER PIPING & ARRANGEMENT DIAGRAM

SCALE: N.T.S.

Seaworthy Systems, Inc.
MARINE ENGINEERS
NAVAL ARCHITECTS
P.O. BOX 965
ESSEX, CT 06426
USA
TEL: 860–767–9061
FAX: 860–767–1263

FOR

MAINE STATE FERRY SERVICE
P.O. BOX 645, 517A MAIN STREET
ROCKLAND, ME 04841–0645

TITLE 154' RO/RO/PASS FERRY

BOW THRUSTER ARRANGEMENT

SCALE		SIZE	DRG No.	REV.	SHEET
AS STATED	DIMS IN INCHES UNLESS OTHERWISE STATED	D	575–02–568	–	2 OF 2

SSI FILE No. s:\active\projnumb\575–02\575–02–568.dwg

DO NOT SCALE, IF IN DOUBT ASK

REVISIONS					
REV.	DATE	DESCRIPTION	SHEET	ZONE	AUTH^{R}
A	01/31/06	COMPLETE GENERAL REVISION TO ANCHOR ARRANGEMENT	1	VAR	JAH
B	–	–			
C	–	–			
D	–	–			

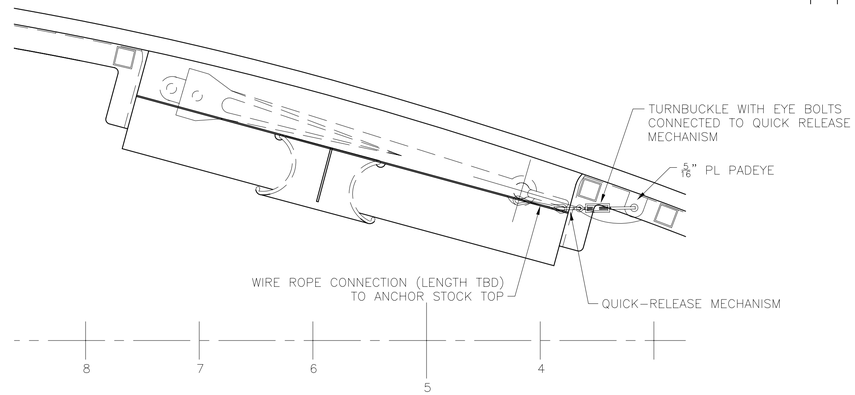

PLAN B-B

SCALE: 3/4 IN = 1 FT

GENERAL NOTES:

1. ALL MATERIALS, WORKMANSHIP AND INSTALLATION TO MEET THE REQUIREMENTS OF CFR 46 SUBCHAPTER H AND BE TO THE SATISFACTION OF THE USCG OCMI.

2. ALL DIMENSIONS AND ARRANGEMENTS ARE APPROXIMATE AND SHOULD BE FINALIZED WITH COMPONENTS CHOSEN PRIOR TO INSTALLATION.

3. ANCHOR CHAIN TO BE CONNECTED TO ANCHOR FOR IMMEDIATE RELEASE.

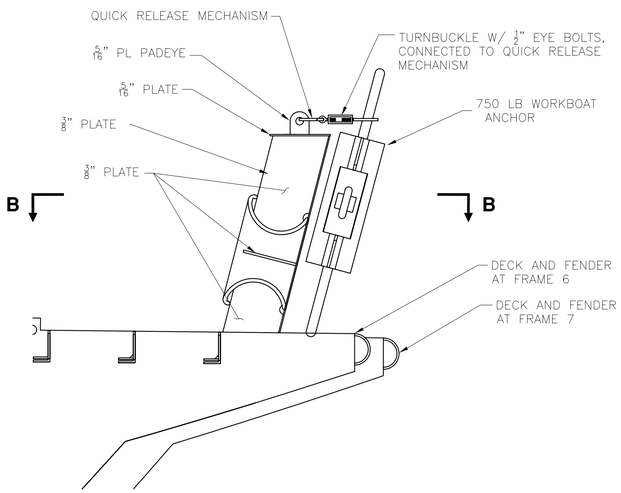

SECTION VIEW A-A

SCALE: 3/4 IN = 1 FT

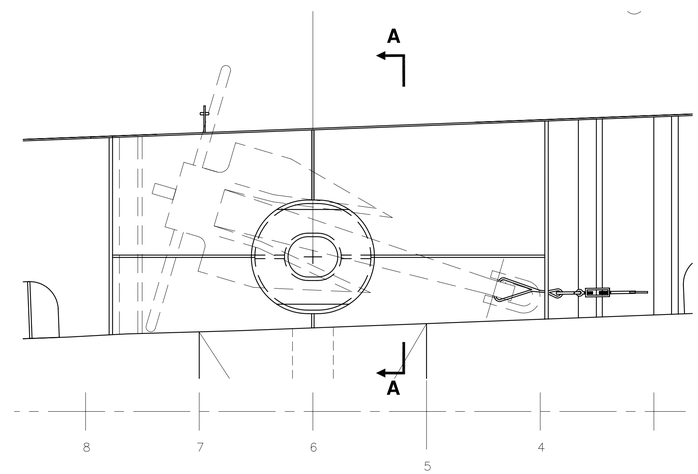

PROFILE VIEW

PORT BULWARK LKG OUTBD

SCALE: 3/4 IN = 1 FT

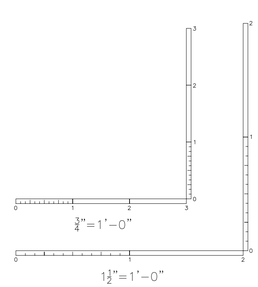

STATE OF MAINE JOHN A. HUNTER NO. 10737 REGISTERED PROFESSIONAL ENGINEER

10-3-05

NO.	REFERENCES					
3	–					
2	–					
1	–					
APPROVALS:	SUBMIT DATE	APPROVED BY	APPROVED DATE	RE-SUBMIT DATE	APPROVED BY	APPROVED DATE
OWNER	–	–	–	–	–	–
USCG	–	–	–	–	–	–
ABS	–	–	–	–	–	–
USPHS	–	–	–	–	–	–

Seaworthy Systems, Inc.
MARINE ENGINEERS NAVAL ARCHITECTS
P.O. BOX 965
ESSEX, CT 06426
USA
TEL: 860-767-9061
FAX: 860-767-1263

CHECKED BY	AUTH^{R} BY	SCALE
JAH 09-30-05	JAH 09-30-05	1/4" = 1' -0"
DRAWN BY	ORIG^{L} DATE	DIMS IN INCHES UNLESS OTHERWISE STATED
LAG	08-25-05	

FOR

MAINE STATE FERRY SERVICE
P.O. BOX 645, 517A MAIN STREET
ROCKLAND, ME 04841-0645

TITLE 154' RO/RO/PASS FERRY

ANCHOR ARRANGEMENT

SIZE	DRG No.	REV.	SHEET
D	575-02-581	A	1 OF 1

SSI FILE No. s:\active\projnumb\575-02\drafting\active\575-02-581.dwg

DO NOT SCALE, IF IN DOUBT ASK

REVISIONS					
REV.	DATE	DESCRIPTION	SHEET	ZONE	AUTH#
A	–	–			
B	–	–			
C	–	–			
D	–	–			

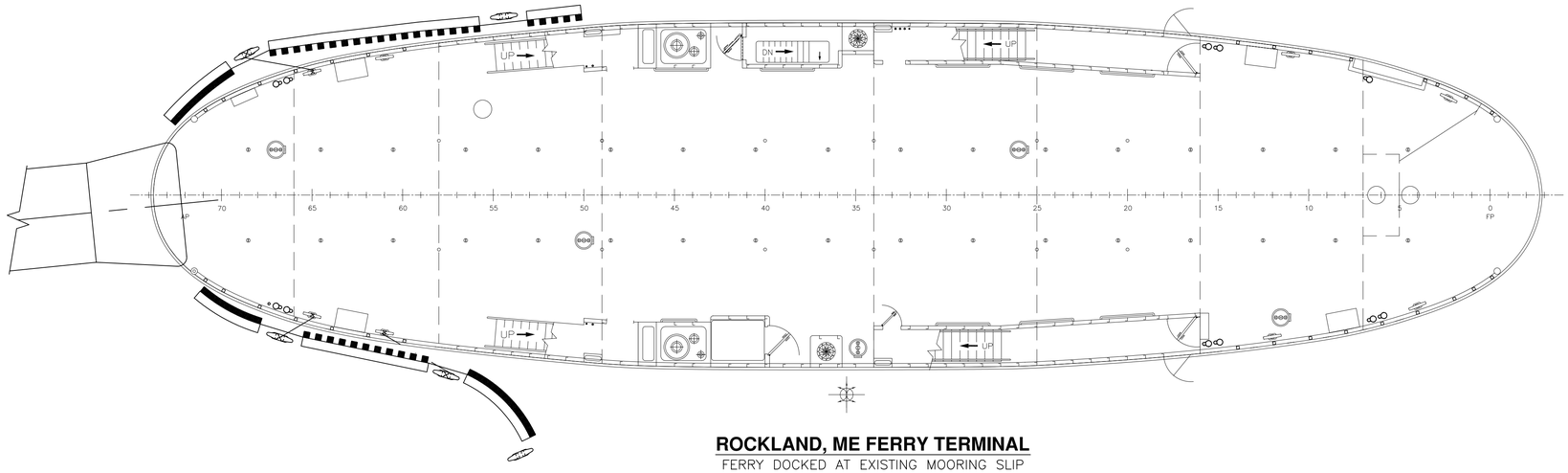

ROCKLAND, ME FERRY TERMINAL

FERRY DOCKED AT EXISTING MOORING SLIP

SCALE: 1/8 IN = 1 FT

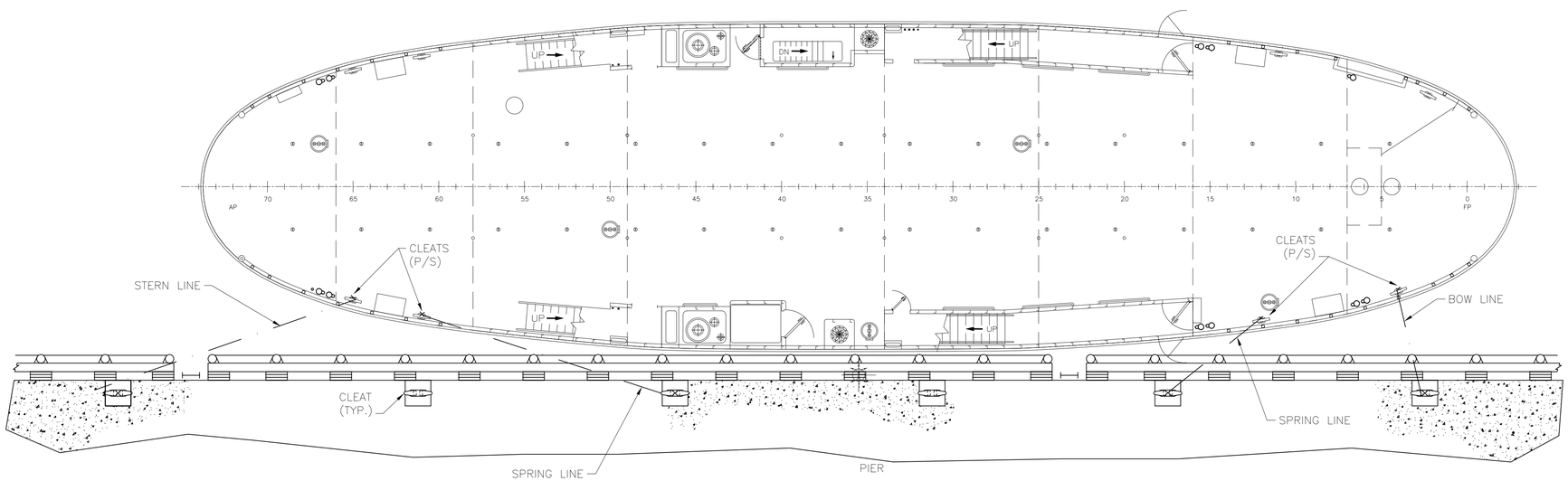

TYPICAL MOORING ARRANGEMENT

SCALE: 1/8 IN = 1 FT

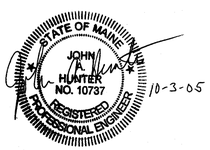

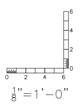

ABS GUIDANCE FOR MOORING LINES

ABS EQUIPMENT NUMERAL	U13
ABS EQUIPMENT NUMBER	410
MOORING LINE REQUIREMENT	MINIMUM 4 OFF X 462' EACH
MINIMUM BREAKING STRENGTH	22,000 LBS (SYNTHETIC OR FIBER ROPE)

NO.	REFERENCES
3	–
2	–
1	–

APPROVALS:	SUBMIT DATE	APPROVED BY	APPROVED DATE	RE-SUBMIT DATE	APPROVED BY	APPROVED DATE
OWNER	–	–	–	–	–	–
USCG	–	–	–	–	–	–
ABS	–	–	–	–	–	–
USPHS	–	–	–	–	–	–

Seaworthy Systems, Inc.
MARINE ENGINEERS NAVAL ARCHITECTS
P.O. BOX 965
ESSEX, CT 06426
USA
TEL: 860-767-9061
FAX: 860-767-1263

CHECKED BY	AUTH^{D} BY	SCALE
JAH 09-30-05	JAH 09-30-05	AS STATED
DRAWN BY	ORIG^{L} DATE	
CG	08-22-05	DIMS IN INCHES UNLESS OTHERWISE STATED

FOR

MAINE STATE FERRY SERVICE
P.O. BOX 645 517A MAINE ST
ROCKLAND, ME 04841-0645

TITLE

154' RO/RO/PASS FERRY

MOORING PLAN

SIZE	DRG No.	REV.	SHEET
D	575-02-582	–	1 OF 3

SSI FILE No. s:\active\projnumb\575-02\575-02-582.dwg

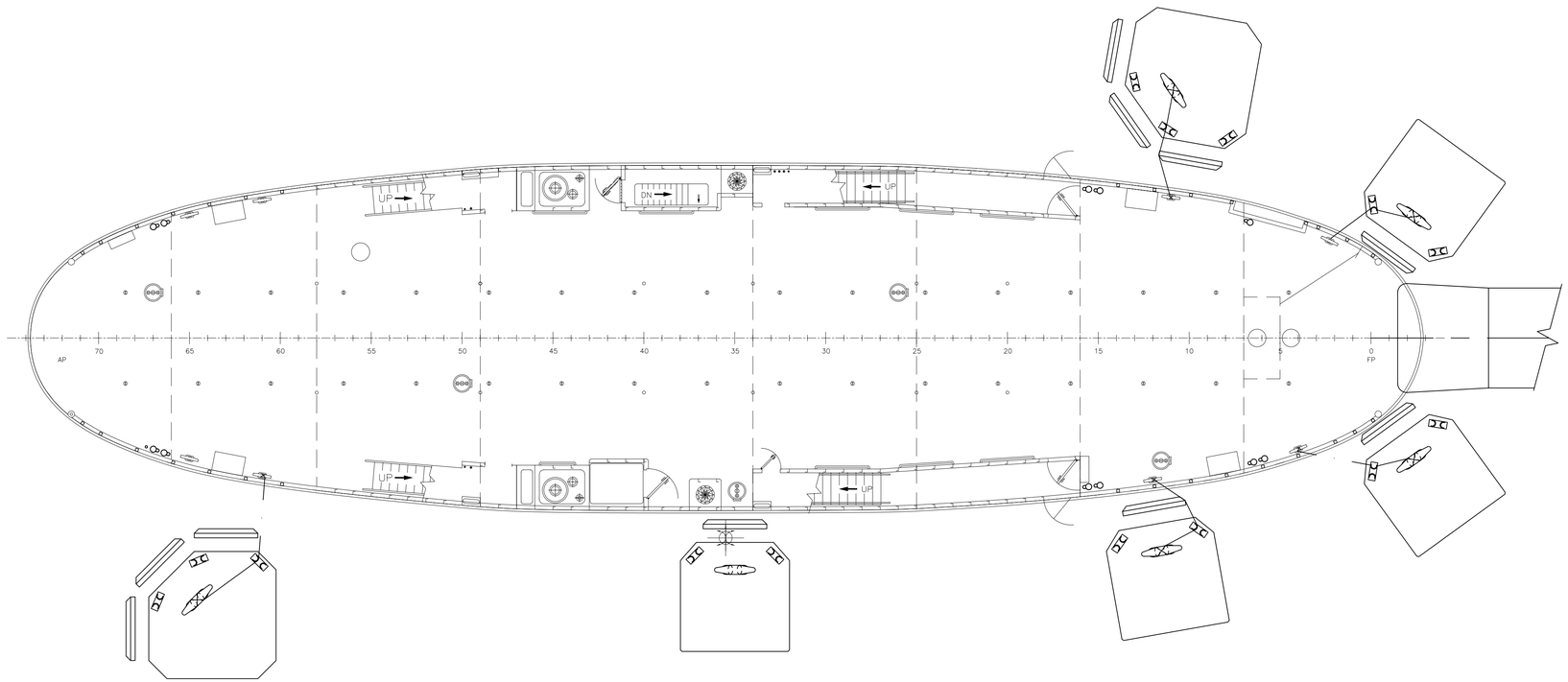

NORTH HAVEN, MAINE FERRY TERMINAL

FERRY DOCKED AT EXISTING FERRY SLIP

SCALE: 1/8 IN = 1 FT

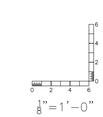

Seaworthy Systems, Inc.

MARINE ENGINEERS NAVAL ARCHITECTS

P.O. BOX 965
ESSEX, CT 06426
USA
TEL: 860-767-9061
FAX: 860-767-1263

FOR

MAINE STATE FERRY SERVICE
P.O. BOX 645, 517A MAINE ST
ROCKLAND, ME 04841-0645

TITLE

154' RO/RO/PASS FERRY

MOORING PLAN

SCALE		SIZE	DRG No.	REV.	SHEET
AS STATED	DIMS IN INCHES UNLESS OTHERWISE STATED	D	575-02-582	—	2 OF 3

SSI FILE No. s:\active\projnumb\575-02\575-02-582.dwg

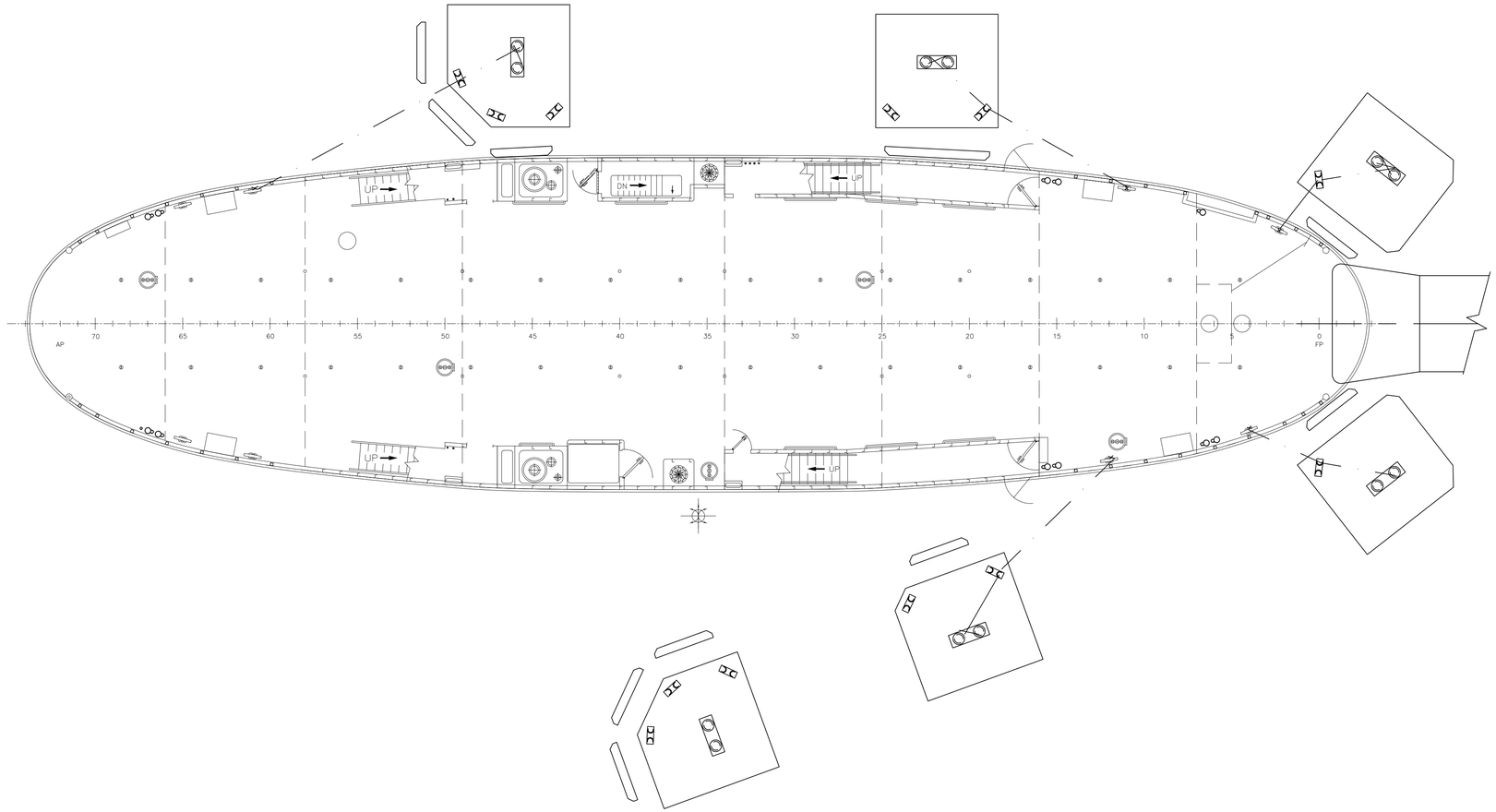

VINALHAVEN, MAINE FERRY TERMINAL

FERRY DOCKED AT NEW FERRY BERTH

SCALE: 1/8 IN = 1 FT

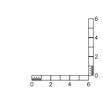

$\frac{1}{8}$"=1'-0"

Seaworthy Systems, Inc.

MARINE ENGINEERS NAVAL ARCHITECTS

P.O. BOX 965
ESSEX, CT 06426
USA
TEL: 860-767-9061
FAX: 860-767-1263

FOR

MAINE STATE FERRY SERVICE
P.O. BOX 645, 517A MAINE ST
ROCKLAND, ME 04841-0645

TITLE

154' RO/RO/PASS FERRY

MOORING PLAN

SCALE	DIMS IN INCHES UNLESS OTHERWISE STATED
AS STATED	

SIZE	DRG No.	REV.	SHEET
D	575-02-582	—	3 OF 3

SSI FILE No. s:\active\projnumb\575-02\575-02-582.dwg

DO NOT SCALE, IF IN DOUBT ASK

REVISIONS					
REV.	DATE	DESCRIPTION	SHEET	ZONE	AUTH^{D}
A	01/16/2006	REVISION TO GEN'L ARRGT, MOVE LV LKRS ON 02 DK	5,6–B	A	JAH
B	–	–			
C	–	–			
D	–	–			

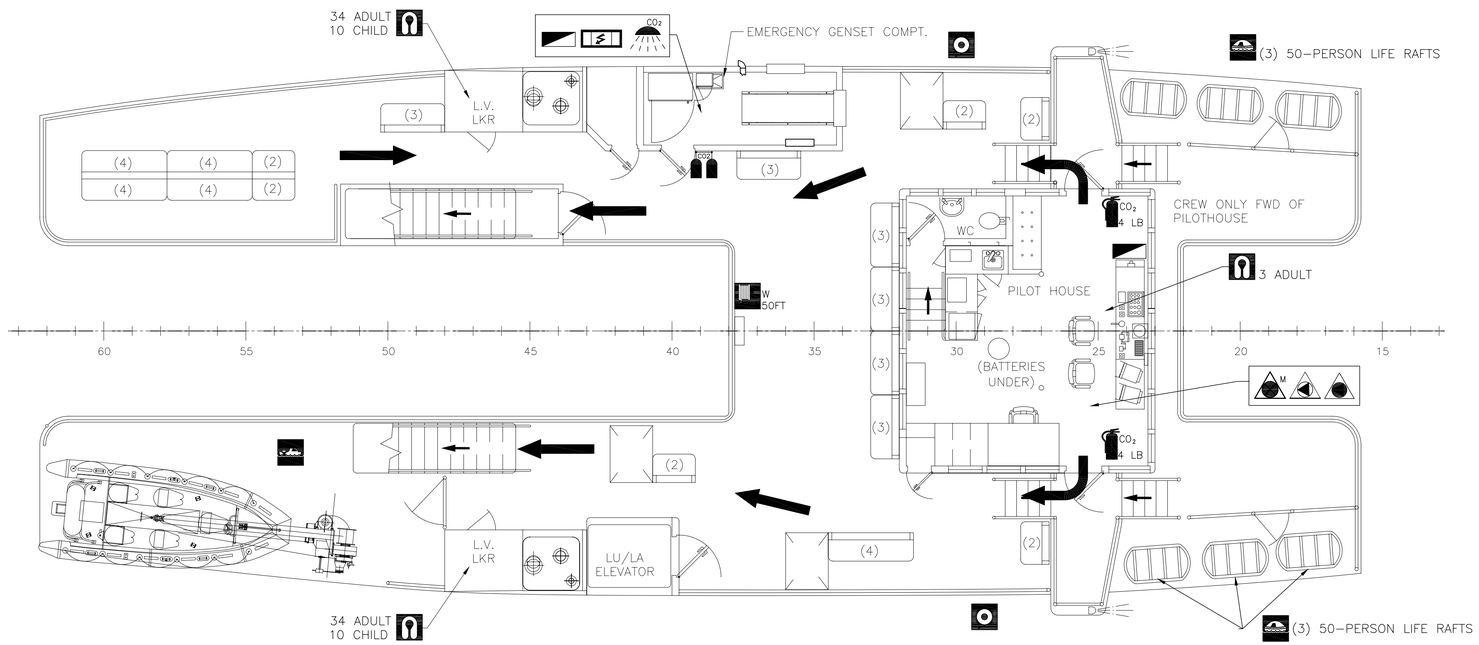

PLAN AT 02 DECK

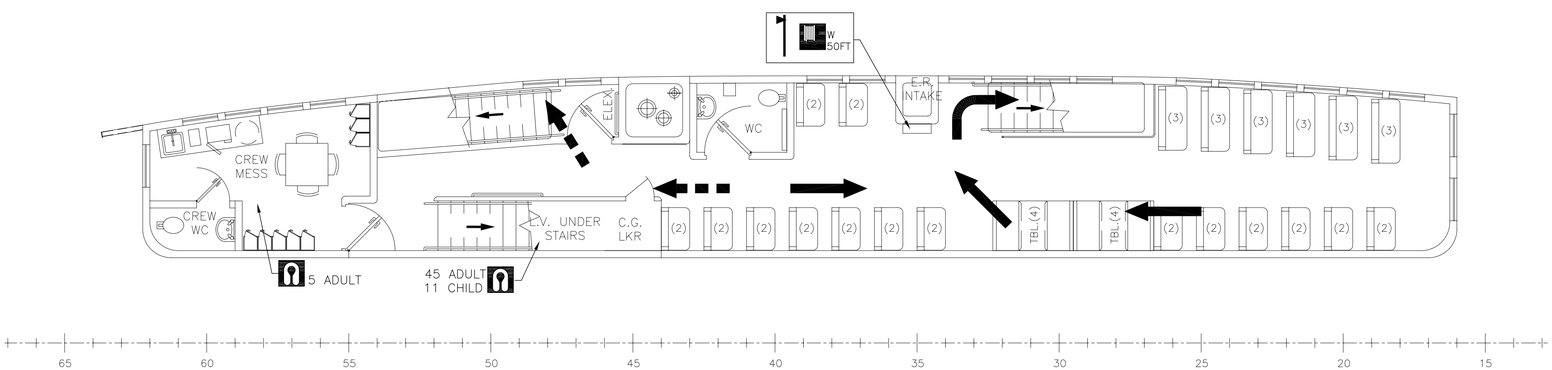

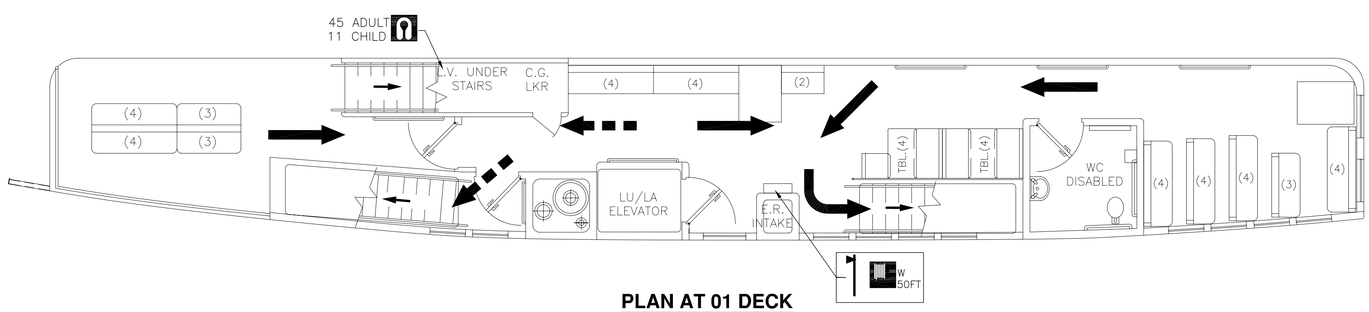

PLAN AT 01 DECK

SYMBOL KEY

WTD	WATER TIGHT DOOR
	LIFE RING W/LIGHT
	LIFE RING W/100 FT LINE
	LIFE JACKETS
	RESCUE BOAT
	LIFE RAFT (25 MAN)
	FIRE AXE
	ALARM PANEL
CO_2	REMOTE RELEASE STATION, CO2
CO_2	SPACE PROTECTED BY CO2
W 75FT	FIRE HOSE AND NOZZLE, WATER
CO_2 10 LB NO 10	EXTINGUISHER, CO2
	FIRE PUMP
	FIRE/BILGE PUMP
	PRIMARY ESCAPE ROUTE
	SECONDARY ESCAPE ROUTE
M	REMOTE VENTILATION (FAN) SHUT–OFF, MACHINERY SPACE
	REMOTE CONTROL, FIRE PUMP
	REMOTE SHUT OFF, FUEL OIL PUMP
	EMERGENCY SWITCHBOARD
CO_2	FIXED EXT. BATTERY, CO2
CO_2	CO2 RELEASE STATION

STATE OF MAINE
JOHN A. HUNTER
NO. 10737
REGISTERED PROFESSIONAL ENGINEER
10-3-05

PRELIMINARY

NO.	REFERENCES
3	–
2	–
1	–

APPROVALS:	SUBMIT DATE	APPROVED BY	APPROVED DATE	RE–SUBMIT DATE	APPROVED BY	APPROVED DATE
OWNER	–	–	–	–	–	–
USCG	–	–	–	–	–	–
ABS	–	–	–	–	–	–
USPHS	–	–	–	–	–	–

Seaworthy Systems, Inc.
MARINE ENGINEERS NAVAL ARCHITECTS
P.O. BOX 965
ESSEX, CT 06426
USA
TEL: 860–767–9061
FAX: 860–767–1263

CHECKED BY	AUTH^{D} BY	SCALE
JAH 09–30–05	JAH 09–30–05	NONE
DRAWN BY	ORIG^{N} DATE	DIMS IN INCHES UNLESS OTHERWISE STATED
JEK	07/25/05	

FOR
MAINE STATE FERRY SERVICE
P.O. BOX 645, 517A MAIN STREET
ROCKLAND, ME 04841–0645

TITLE 154' RO/RO/PASS FERRY

FIRE CONTROL AND SAFETY PLAN

SIZE	DRG No.	REV.	SHEET
D	575–02–583	A	1 OF 2

SSI FILE No. s:\active\projnumb\575–02\575–02–583.dwg

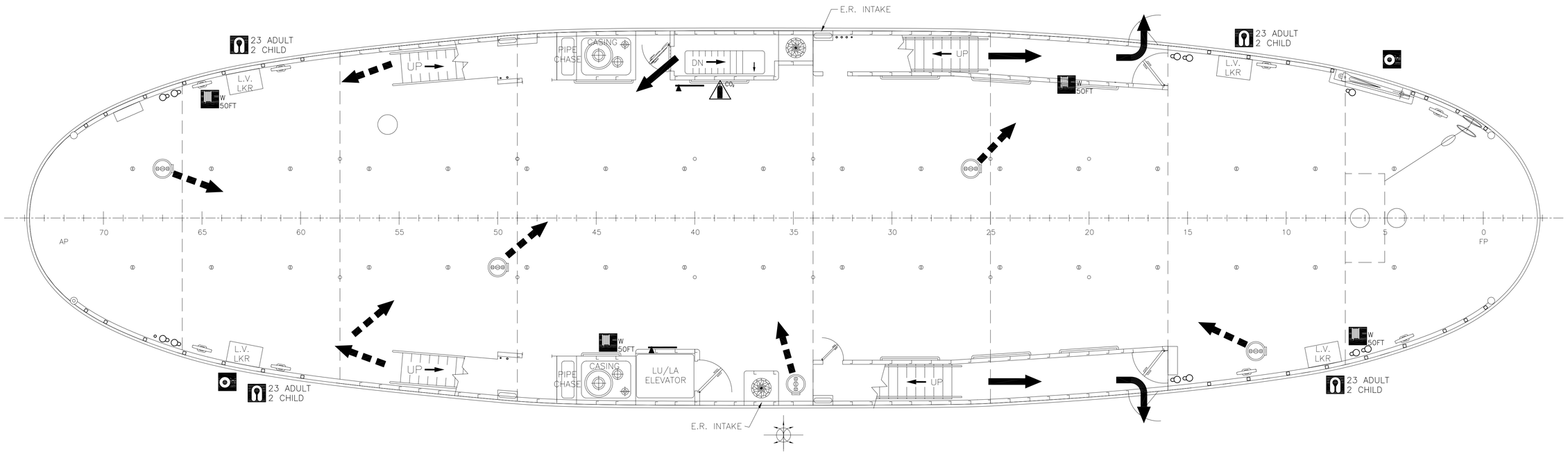

PLAN VIEW, MAIN DECK

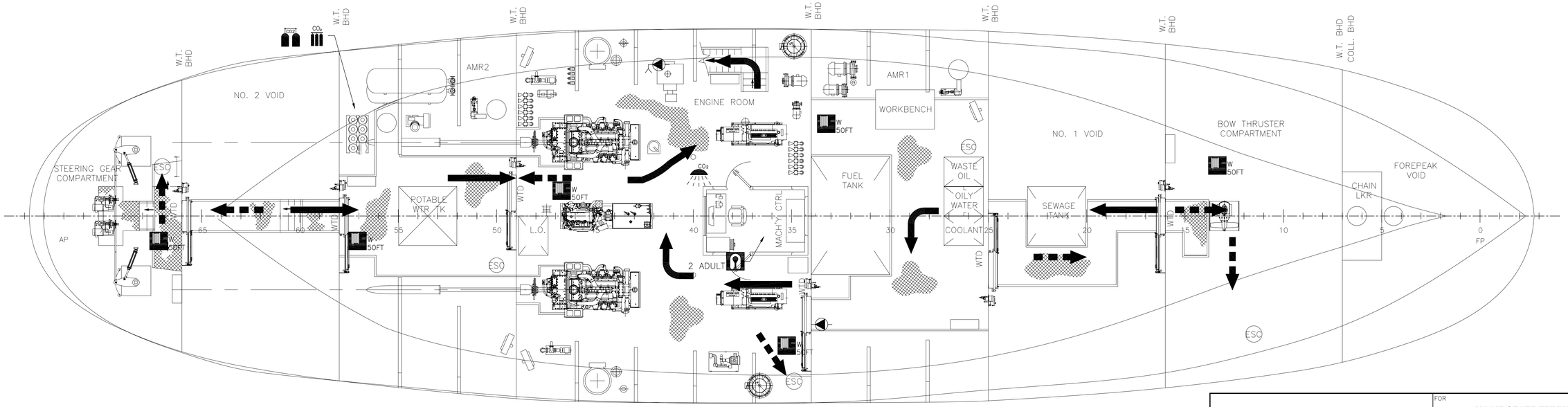

PLAN VIEW BELOW MAIN DECK

Seaworthy Systems, Inc.
MARINE ENGINEERS
NAVAL ARCHITECTS
P.O. BOX 965
ESSEX, CT 06426
USA
TEL: 860-767-9061
FAX: 860-767-1263

FOR
MAINE STATE FERRY SERVICE
P.O. BOX 645, 517A MAIN STREET
ROCKLAND, ME 04841-0645

TITLE 154' RO/RO/PASS FERRY

FIRE CONTROL
AND SAFETY PLAN

SCALE	DIMS IN INCHES UNLESS OTHERWISE STATED	SIZE	DRG No.	REV	SHEET
NONE		D	575-02-583	A	2 OF 2

SSI FILE No. s:\active\projnumb\575-02\575-02-583.dwg

MATERIAL SCHEDULE

SERVICE	DESIGN TEMP & PRESSURE	SIZE	PIPE	TAKEDOWN JOINTS				FITTINGS	VALVES	
				MATERIAL	GASKETS	BOLTING	NUTS		BODY	TRIM
OILY WATER SYSTEM	100 F 65 PSIG	OVER 2"	SEAMLESS OR ERW STL ASTM A106 GR. B OR A53 GR. B	FLNGD SLIP-ON OR BUTTWELD, CARBON STL, ASTM A105	1/16" THK FULL-FACE NON-ASBESTOS	CARBON STL, ASTM A307 GR B	CARBON STL, ASTM A563 GR A	BUTTWELD, CARBON STL, ASTM A234 GR WPB S.W. OR SCRD., ASTM A234 GR WPB OR A105	FLGD, BUTTERFLY WAFER OR LUG, D.I. ASTM A395 OR CARBON STL ASTM A216 GR WCB (OR A105)	S.S. OR BRONZE
		2" AND BELOW		SCRD, CARBON STL, ASTM A105					SCRD, BRONZE, ASME SB61 OR SB62	S.S. OR BRONZE

SYMBOLS LIST

	SCREW-DOWN GLOBE VALVE	P	PRESSURE GAUGE
	BALL VALVE	V	VACUUM GAUGE
L.C.	SELF CLOSING DRAIN VALVE (LOCKED CLOSED)		SUCTION BELLMOUTH
	GATE VALVE		HOSE CONNECTOR C/W CAP & KEEP CHAIN
	RELIEF VALVE		FUNNEL
	SWING CHECK VALVE	3/4"	LINE SIZE
	ROTARY PUMP		ITEM SUPPLIED W/PRINCIPAL COMPONENT
	SCREWED CAP PIPE TERMINAL		END OF HEADER OR DISTRIBUTION MANIFOLD
HLA	HIGH LEVEL ALARM		BALL TYPE VENT HEAD C/W CORROSION RES. FLAME SCREEN
	DUPLEX FILTER C/W CHANGEOVER VALVE		FLEXIBLE HOSE/CONNECTOR
TLI	TLI		

REVISIONS

REV.	DATE	DESCRIPTION	SHEET	ZONE	AUTH.
A	–	–			
B	–	–			
C	–	–			
D	–	–			

GENERAL NOTES:

1. ALL MATERIALS, WORKMANSHIP AND INSTALLATION TO MEET THE REQUIREMENTS OF CFR 46 SUBCHAPTER H AND ABS, AND BE TO THE SATISFACTION OF THE USCG OCMI.

2. ALL VALVES, COCKS AND CONNECTIONS SHALL BE READILY ACCESSIBLE FOR MAINTENANCE AND OPERATION. PIPE RUNS SHALL BE DESIGNED FOR EASY REMOVAL.

3. DECK CONNECTIONS TO BE FITTED WITH BRASS PLATES IDENTIFYING TYPE OF OIL.

4. DRAIN & VENT LINES SHALL BE INSTALLED TO ENSURE CONTINUOUS DRAINAGE.

5. PIPING PASSING THROUGH OIL OR WATERTIGHT BOUNDARIES SHALL BE FITTED WITH SLEEVES WELDED TO THE BOUNDARY AND THE PIPING.

6. HANGERS SHALL BE PROVIDED TO SUPPORT THE PIPING. HANGER LOCATIONS SHALL BE CHOSEN TO PREVENT VISIBLE PIPE VIBRATION.

7. DRIP TRAYS/SAVEALLS TO BE FITTED AROUND ALL TANK VALVE ASSEMBLIES, PUMPS, FILTERS, ETC. AND DRAINED INTO A HEADER LEADING TO THE WASTE OIL TANK.

8. ALL EMERGENCY SHUT-OFF VALVES SHOULD BE AS CLOSE TO THE BULKHEAD AS PRACTICAL.

9. EACH ENGINE IS EQUIPPED WITH A SELF-CONTAINED LUBRICATION SYSTEM.

10. AUTOMATIC CUT OFF FOR PUMPS, TRIGGERED BY WASTE OIL TANK ALARM.

11. THE OILY WATER DISCHARGE PORTABLE ADAPTER THAT MEETS 33 CFR 155.430 SHALL BE STORED ONBOARD.

12. FLEXIBLE HOSES SHALL BE OF AN APPROVED TYPE FOR THE SERVICE AND LIMITED TO 30" IN LENGTH.

STATE OF MAINE
JOHN A. HUNTER
NO. 10737
REGISTERED PROFESSIONAL ENGINEER
10-3-05

ITEM	PART CODE	DESCRIPTION	MATERIAL	QTY
6	TLI	GEMS SURESITE LEVEL INDICATOR	SS	2
5	LEVEL SWITCH	MOBREY TYPE M	SS	2
4	STRAINER	HAYWARD 53 BTX 2" DUPLEX STRAINER, 20 MESH	CS	1
3	WASTE OIL TANK (SLUDGE TANK)	450 GALLONS		1
2	OILY WATER TANK	450 GALLONS		1
1	E.R. WASTE OIL PP	VIKING 5195HL POSITIVE DISPL. PEDESTAL PUMP, 30 GPM,1750 RPM, SINGLE SPEED TEFC MOTOR	CS	1

BILL OF MATERIALS

NO.	REFERENCES
5	–
4	–
3	575-02-506, TANK VENTS SYSTEM DIAGRAM
2	575-02-261, FUEL OIL SYSTEM DIAGRAM
1	575-02-529, BILGE SYSTEM DIAGRAM

APPROVALS:	SUBMIT DATE	APPROVED BY	APPROVED DATE	RE-SUBMIT DATE	APPROVED BY	APPROVED DATE
OWNER	–	–	–	–	–	–
USCG	–	–	–	–	–	–
ABS	–	–	–	–	–	–
USPHS	–	–	–	–	–	–

Seaworthy Systems, Inc.
MARINE ENGINEERS NAVAL ARCHITECTS
P.O. BOX 965
ESSEX, CT 06426
USA
TEL: 860-767-9061
FAX: 860-767-1263

FOR
MAINE STATE FERRY SERVICE
P.O. BOX 645, 517A MAIN STREET
ROCKLAND, ME 04841-0645

TITLE 154' RO/RO/PASS FERRY

WASTE OIL AND OILY WATER SYSTEM DIAGRAM

CHECKED BY	AUTH. BY	SCALE
JAH 09-30-05	JAH 09-30-05	NONE
DRAWN BY JEK	ORIG. DATE 08-03-05	DIMS IN INCHES UNLESS OTHERWISE STATED

SIZE	DRG No.	REV.	SHEET
D	575-02-593	–	1 OF 2

SSI FILE No. s:\active\projnumb\575-02\575-02-593.dwg

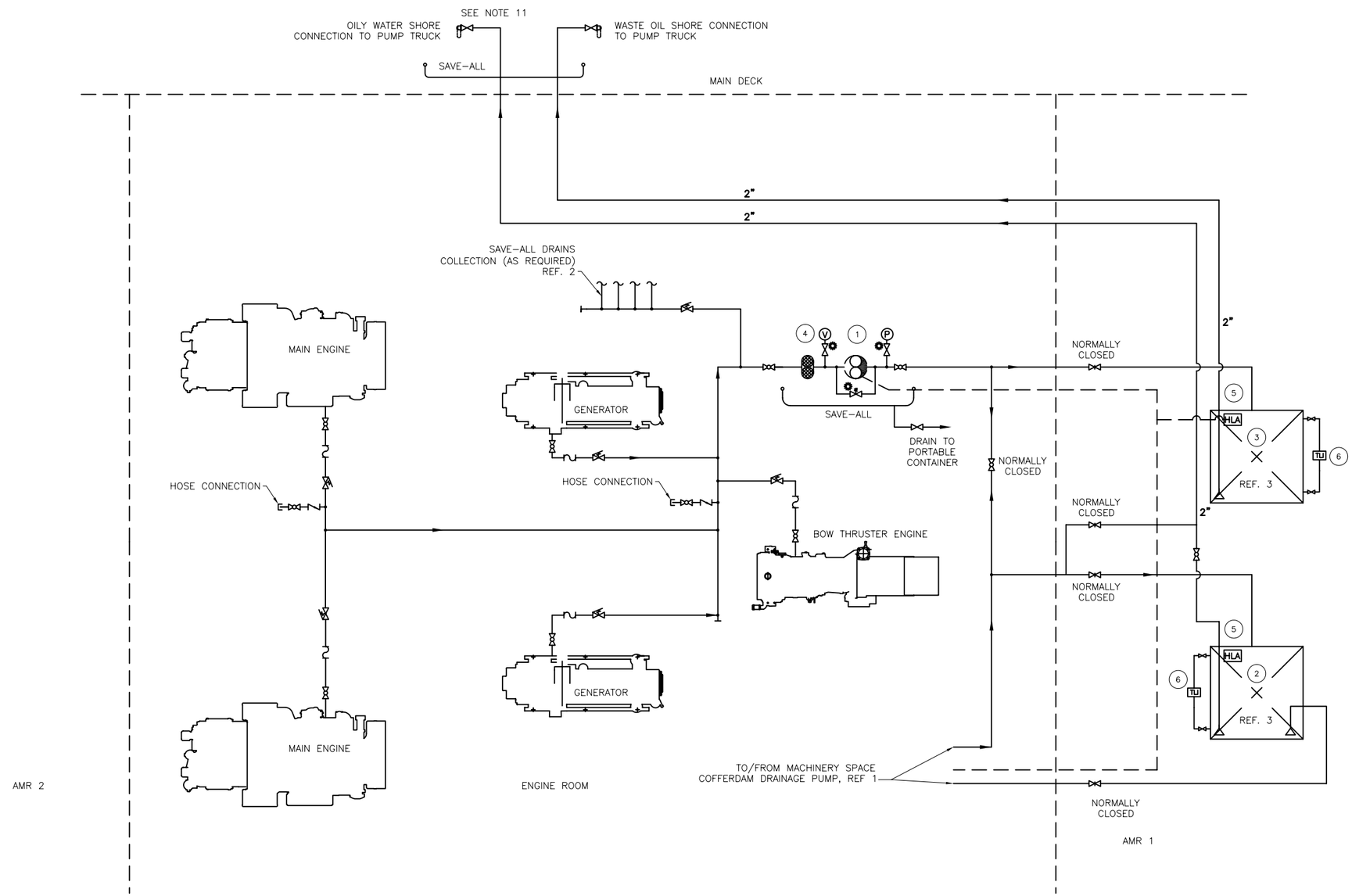

Seaworthy Systems, Inc.
MARINE ENGINEERS NAVAL ARCHITECTS
P.O. BOX 965
ESSEX, CT 06426
USA
TEL: 860-767-9061
FAX: 860-767-1263

FOR
MAINE STATE FERRY SERVICE
P.O. BOX 645, 517A MAIN STREET
ROCKLAND, ME 04841-0645

TITLE
154' RO/RO/PASS FERRY

WASTE OIL AND OILY WATER SYSTEM DIAGRAM

SCALE		SIZE	DRG No.	REV.	SHEET
N.T.S.	DIMS IN INCHES UNLESS OTHERWISE STATED	D	575-02-593	—	2 OF 2

SSI FILE No. s:\active\projnumb\575-02\575-02-593.dwg

DO NOT SCALE, IF IN DOUBT ASK

REVISIONS					
REV.	DATE	DESCRIPTION	SHEET	ZONE	AUTH#
A	–	–			
B	–	–			
C	–	–			
D	–	–			

GENERAL NOTES:

1. ALL MATERIALS, WORKMANSHIP AND INSTALLATION TO MEET THE REQUIREMENTS OF CFR 46 SUBCHAPTER H AND BE TO THE SATISFACTION OF THE USCG OCMI.

2. ALL DIMENSIONS ARE APPROXIMATE AND SHOULD BE VERIFIED IN THE FIELD PRIOR TO INSTALLATION.

LOA	~ 153'–8" (4" PIPE GUARDS)
LBP	143'–10⅞"
BOG	~ 38'–9" (4" PIPE GUARDS)
LOD	153'–0"
BREADTH, HULL	38'–0"
DWL	9'–0"

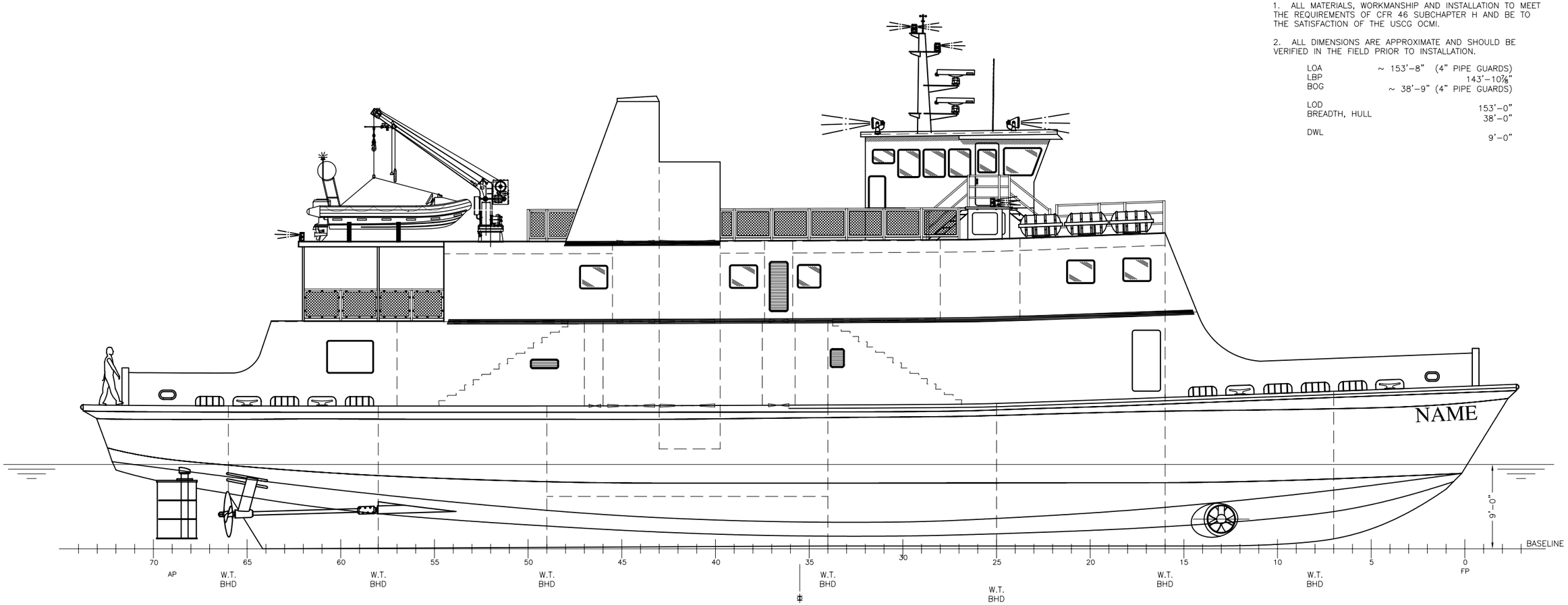

OUTBOARD PROFILE

STBD SIDE

SCALE: 3/16 IN = 1 FT

STATE OF MAINE
JOHN A. HUNTER
NO. 10737
REGISTERED PROFESSIONAL ENGINEER
10-3-05

5	–	–	–	–
4	–	–	–	–
3	–	–	–	–
2	–	–	–	–
1	–	–	–	–
ITEM	PART CODE	DESCRIPTION	MATERIAL	QTY

BILL OF MATERIALS

3	–
2	–
1	–
NO.	REFERENCES

APPROVALS:	SUBMIT DATE	APPROVED BY	APPROVED DATE	RE–SUBMIT DATE	APPROVED BY	APPROVED DATE
OWNER	–	–	–	–	–	–
USCG	–	–	–	–	–	–
ABS	–	–	–	–	–	–
USPHS	–	–	–	–	–	–

3/16"=1'–0"

Seaworthy Systems, Inc.
P.O. BOX 965
ESSEX, CT 06426
USA
TEL: 860–767–9061
FAX: 860–767–1263
MARINE ENGINEERS NAVAL ARCHITECTS

FOR

MAINE STATE FERRY SERVICE
P.O. BOX 645, 517A MAIN STREET
ROCKLAND, ME 04841–0645

TITLE 154' RO/RO/PASS FERRY

GENERAL ARRANGEMENT

CHECKED BY	AUTH# BY	SCALE
JAH 05/04/05	JAH 05/04/05	3/16"=1'–0"
DRAWN BY	ORIG. DATE	
JEK	05/04/05	DIMS IN INCHES UNLESS OTHERWISE STATED

SIZE	DRG No.	REV.	SHEET
D	575–02–601	–	1 OF 6

SSI FILE No. s:\active\projnumb\575-02\575-02-601.dwg

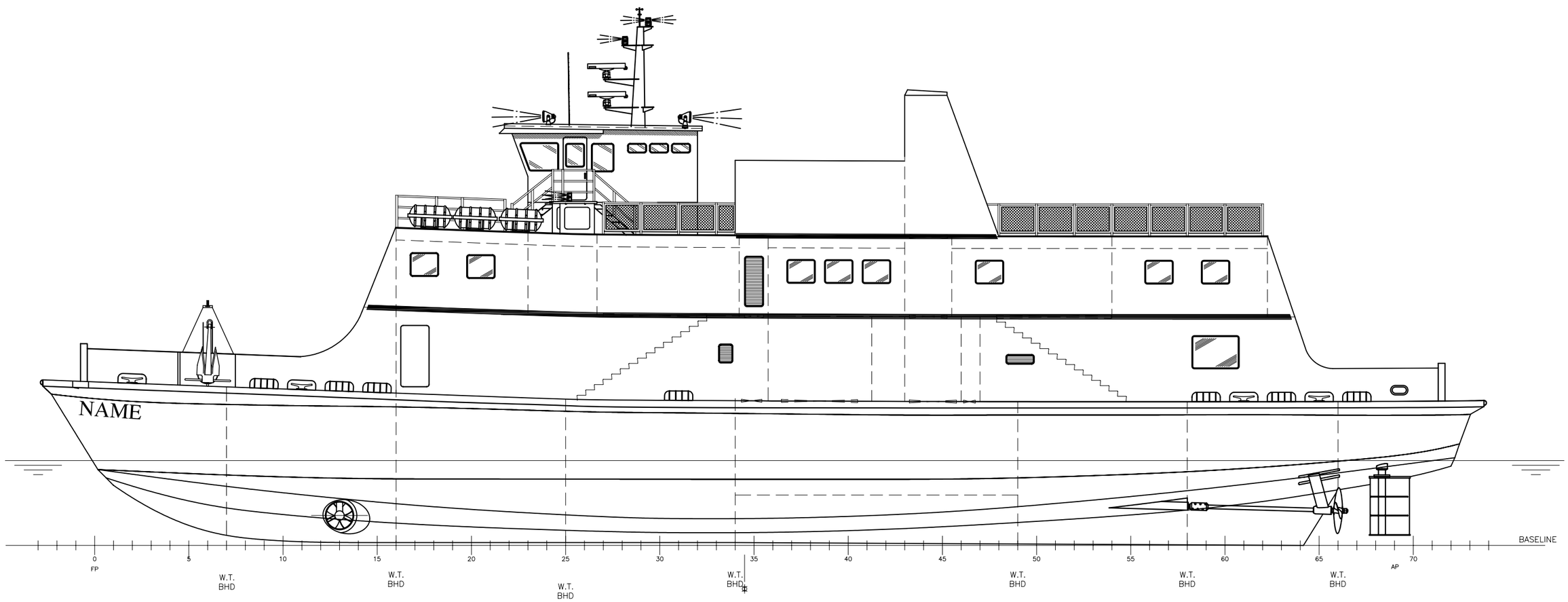

OUTBOARD PROFILE

PORT SIDE

SCALE: 3/16 IN = 1 FT

3/16"=1'-0"

Seaworthy Systems, Inc.
MARINE ENGINEERS NAVAL ARCHITECTS
P.O. BOX 965
ESSEX, CT 06426
USA
TEL: 860-767-9061
FAX: 860-767-1263

FOR

MAINE STATE FERRY SERVICE
P.O. BOX 645, 517A MAIN STREET
ROCKLAND, ME 04841-0645

TITLE 154' RO/RO/PASS FERRY

GENERAL ARRANGEMENT

SCALE		SIZE	DRG No.	REV.	SHEET
3/16"=1'-0"	DIMS IN INCHES UNLESS OTHERWISE STATED	D	575-02-601	—	2 OF 6

SSI FILE No. s:\active\projnumb\575-02\575-02-601.dwg

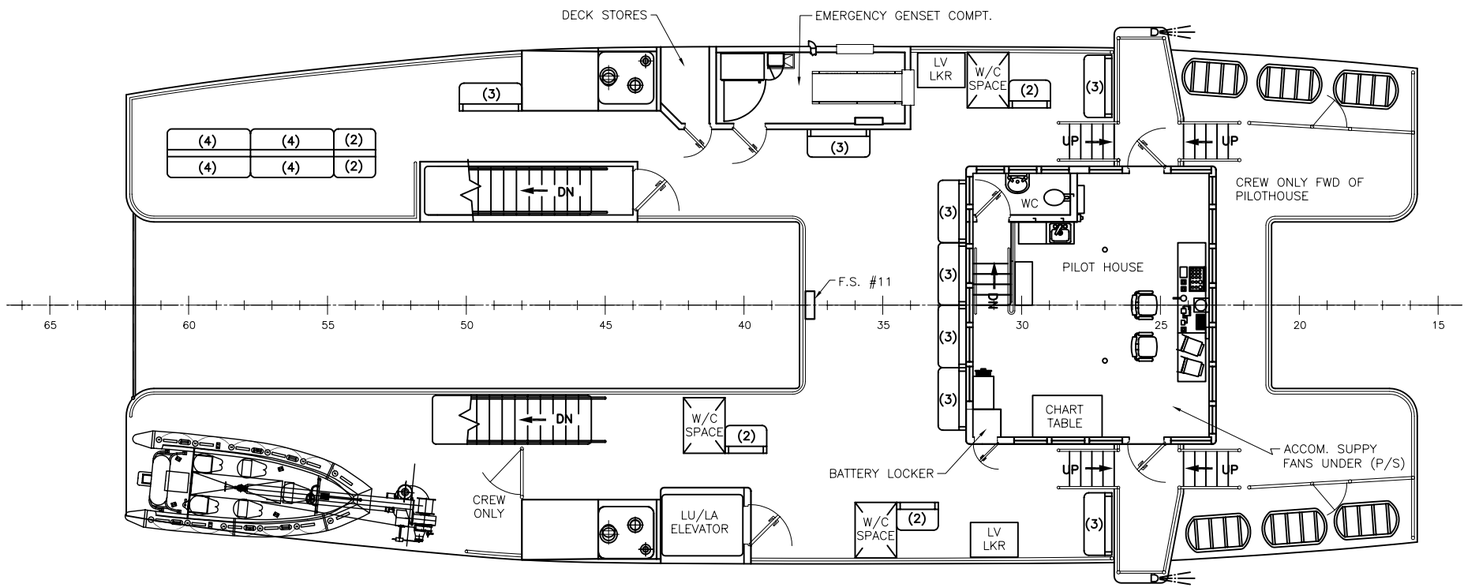

PLAN AT 02 DECK

32' 3" ABOVE BASELINE, 16'-8" ABOVE MAIN DECK

SCALE: 3/16" = 1'-0"

TOTAL SEATS:	163
TOTAL SEATS ON 01 DECK:	110
BENCH SEATS	91
TABLE SEATS	16
WHEELCHAIRS	3
TOTAL SEATS ON 02 DECK:	53
BENCH SEATS	50
WHEELCHAIRS	3
PASSENGERS IN CARS	48
STANDING PASSENGERS	39
TOTAL PASSENGERS	250

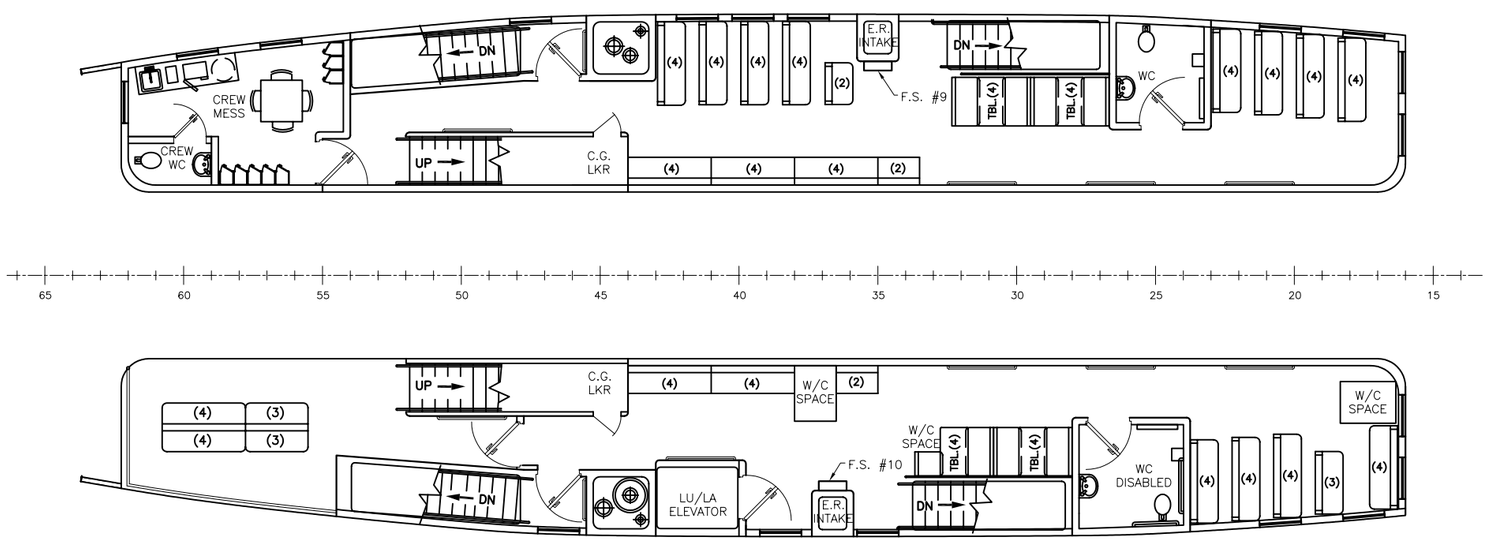

PLAN AT 01 DECK

23' 11" ABOVE BASELINE, 8'-4" ABOVE MAIN DECK

SCALE: 3/16" = 1'-0"

3/16"=1'-0"

Seaworthy Systems, Inc.

MARINE ENGINEERS NAVAL ARCHITECTS

P.O. BOX 965
ESSEX, CT 06426
USA
TEL: 860-767-9061
FAX: 860-767-1263

FOR

MAINE STATE FERRY SERVICE
P.O. BOX 645, 517A MAIN STREET
ROCKLAND, ME 04841-0645

TITLE 154' RO/RO/PASS FERRY

GENERAL ARRANGEMENT

SCALE 3/16"=1'-0"

DIMS IN INCHES UNLESS OTHERWISE STATED

SIZE	DRG No.	REV.	SHEET
D	575-02-601	—	3 OF 6

SSI FILE No. s:\active\projnumb\575-02\575-02-601.dwg

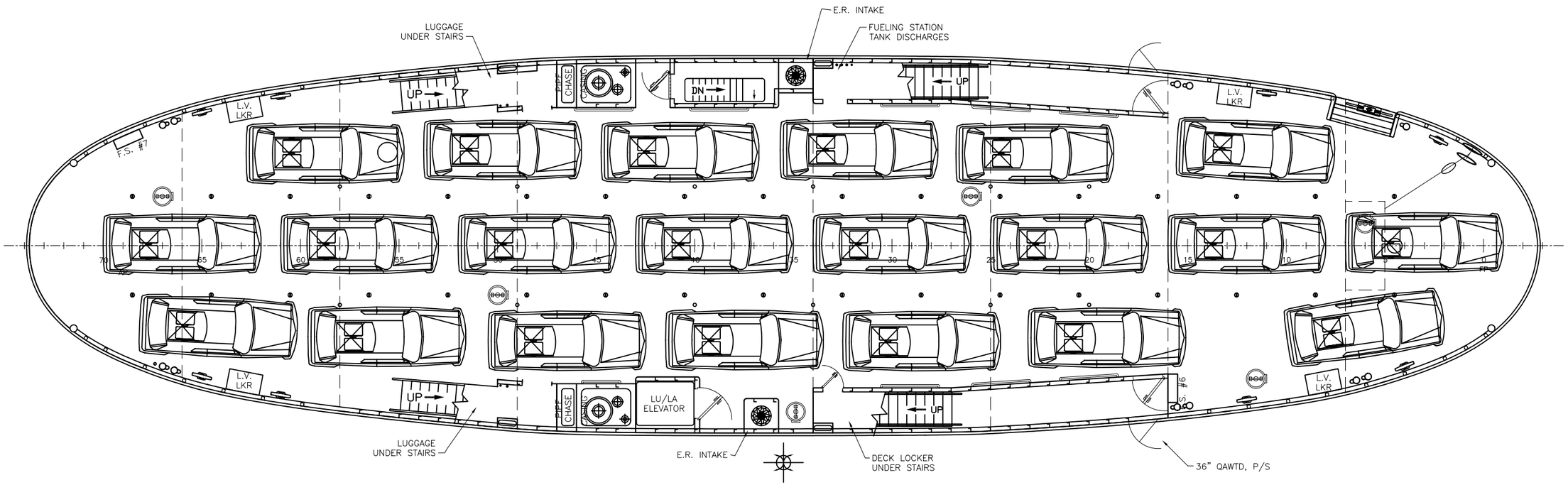

PLAN VIEW, MAIN DECK

15'-7" ABOVE BASELINE

SCALE: 3/16"=1'-0"

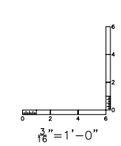

$\frac{3}{16}$"=1'-0"

Seaworthy Systems, Inc.
MARINE ENGINEERS NAVAL ARCHITECTS
P.O. BOX 965
ESSEX, CT 06426
USA
TEL: 860-767-9061
FAX: 860-767-1263

FOR
MAINE STATE FERRY SERVICE
P.O. BOX 645, 517A MAIN STREET
ROCKLAND, ME 04841-0645

TITLE
154' RO/RO/PASS FERRY
GENERAL ARRANGEMENT

SCALE		SIZE	DRG No.	REV.	SHEET
3/16"=1'-0"	DIMS IN INCHES UNLESS OTHERWISE STATED	D	575-02-601	—	4 OF 6

SSI FILE No. s:\active\projnumb\575-02\575-02-601.dwg

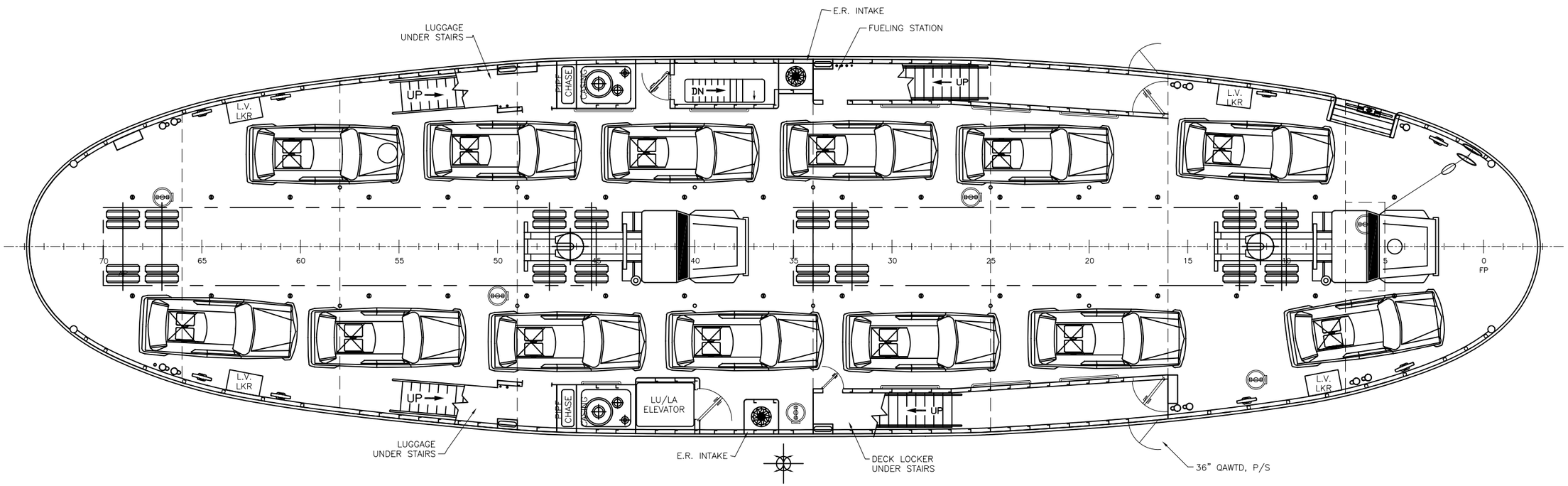

PLAN VIEW, MAIN DECK

15'-7" ABOVE BASELINE

SCALE: 3/16"=1'-0"

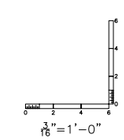

$\frac{3}{16}$"=1'-0"

Seaworthy Systems, Inc.

MARINE ENGINEERS NAVAL ARCHITECTS

P.O. BOX 965
ESSEX, CT 06426
USA
TEL: 860-767-9061
FAX: 860-767-1263

FOR

MAINE STATE FERRY SERVICE
P.O. BOX 645, 517A MAIN STREET
ROCKLAND, ME 04841-0645

TITLE 154' RO/RO/PASS FERRY

GENERAL ARRANGEMENT

SCALE 3/16"=1'-0"

DIMS IN INCHES UNLESS OTHERWISE STATED

SIZE	DRG No.	REV.	SHEET
D	575-02-601	—	5 OF 6

SSI FILE No. s:\active\projnumb\575-02\575-02-601.dwg

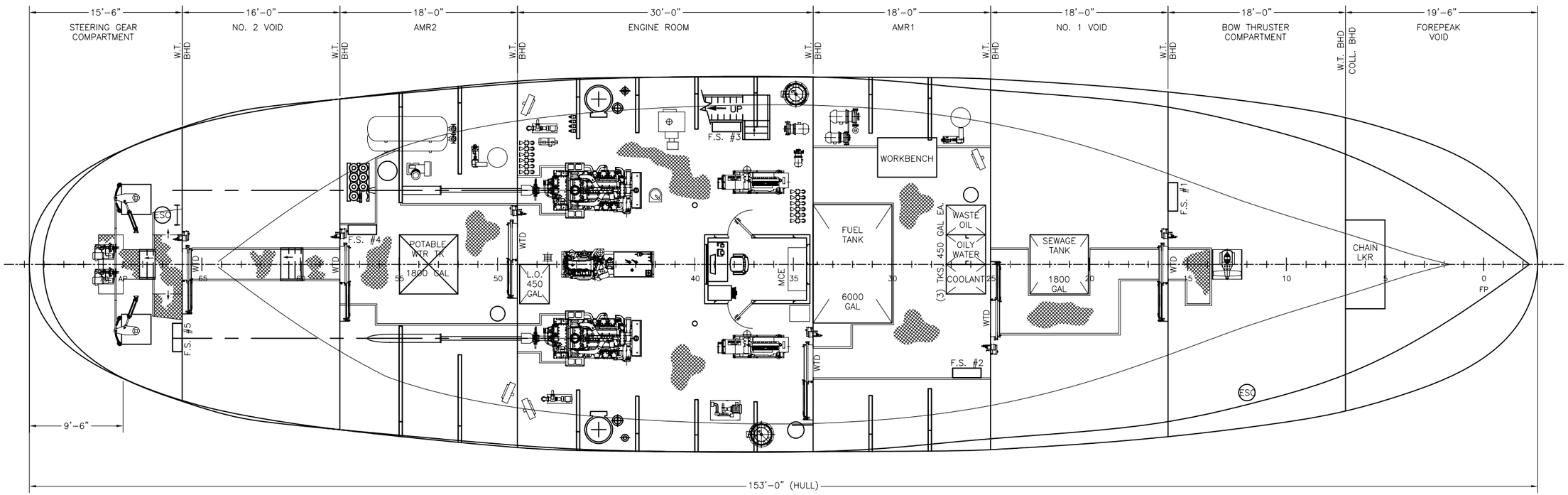

PLAN VIEW BELOW MAIN DECK

SCALE: 3/16"=1'-0"

3/16" = 1'-0"

Seaworthy Systems, Inc.
MARINE ENGINEERS NAVAL ARCHITECTS
P.O. BOX 965
ESSEX, CT 06426
USA
TEL: 860-767-9061
FAX: 860-767-1263

FOR
MAINE STATE FERRY SERVICE
P.O. BOX 645, 517A MAIN STREET
ROCKLAND, ME 04841-0645

TITLE 154' RO/RO/PASS FERRY
GENERAL ARRANGEMENT

SCALE 3/16"=1'-0"

DIMS IN INCHES UNLESS OTHERWISE STATED

SIZE	DRG No.	REV.	SHEET
D	575-02-601	—	6 OF 6

SSI FILE No. s:\active\projnumb\575-02\575-02-601.dwg

DO NOT SCALE, IF IN DOUBT ASK

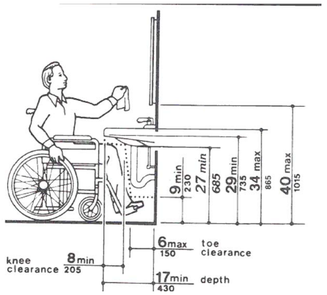

DETAIL 8D

TYPICAL ELEVATION, LAVATORY INSTALLATION

N.T.S.

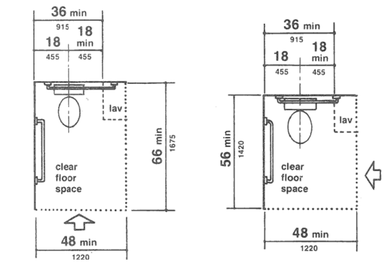

DETAIL 6D

PLAN VIEW, REQUIRED WC CLEARANCES

N.T.S.

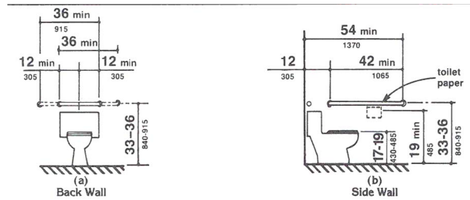

DETAIL 4D

REQUIRED CLEARANCES FOR WC'S AND FIXTURES

N.T.S.

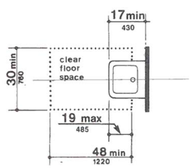

DETAIL 8C

PLAN VIEW, REQUIRED LAVATORY CLEARANCES

N.T.S.

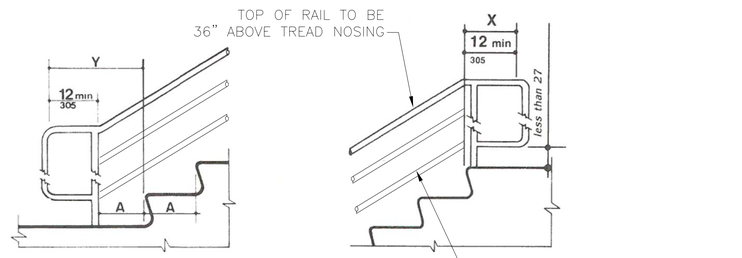

NOTE: ALL STAIRWAY HANDRAILS TO BE 1" SCH 40 PIPE. INTERMEDIATE SUPPORTS TO BE 2" SCH 40 PIPE, SPACED 36" BETWEEN

DETAIL 6C

STAIRWAY RAILINGS AND HANDRAIL EXTENSIONS

N.T.S.

REVISIONS

REV.	DATE	DESCRIPTION	SHEET	ZONE	AUTH.
A	–	–			
B	–	–			
C	–	–			
D	–	–			

GENERAL NOTES:

1. ALL MATERIALS, WORKMANSHIP AND INSTALLATION TO MEET THE REQUIREMENTS OF CFR 46 SUBCHAPTER H AND BE TO THE SATISFACTION OF THE USCG OCMI.

2. ALL DIMENSIONS ARE APPROXIMATE AND SHOULD BE VERIFIED IN THE FIELD PRIOR TO INSTALLATION.

3. ACCESSIBILITY INFORMATION TAKEN FROM "RECOMMENDATIONS FOR ACCESSIBILITY GUIDELINES FOR PASSENGER VESSELS: FINAL REPORT," DATED DECEMBER 2000. ADDITIONAL INFORMATION OBTAINED FROM "AMERICANS WITH DISABILITIES ACT: ACCESSIBILITY GUIDELINES FOR TRANSPORTATION VEHICLES," DATED SEPTEMBER 1994.

4. CONTROLS AND OPERATING MECHANISMS (INCLUDING THOSE FOR DOORS, LAVATORIES, WATER CLOSETS, ETC.) SHALL BE OPERABLE WITH ONE HAND AND SHALL NOT REQUIRE TIGHT GRASPING, PINCHING, OR TWISTING OF THE WRIST. THE FORCE REQUIRED TO ACTIVATE CONTROLS SHALL NOT BE GREATER THAN 5 LBF.

5. CLEAR FLOOR SPACE THAT ALLOWS A FORWARD OR PARALLEL APPROACH BY A PERSON USING A WHEELCHAIR SHALL BE PROVIDED AT CONTROLS, DISPENSERS, RECEPTACLES, AND OTHER OPERABLE EQUIPMENT.

6. WATER CLOSETS AND ASSOCIATED GRAB BARS AND FIXTURES SHALL BE INSTALLED AS INDICATED IN DETAILS E7 AND E9. FLUSH CONTROLS SHALL BE EITHER HAND OPERATED COMPLYING WITH NOTE 4, OR AUTOMATIC. TOILET PAPER DISPENSERS SHALL NOT BE OF A TYPE THAT CONTROLS DELIVERY OR DOES NOT ALLOW CONTINUOUS PAPER FLOW.

7. LAVATORIES SHALL BE INSTALLED WITH FLOOR SPACE AND KNEE AND TOE CLEARANCES AS INDICATED IN DETAILS E11 AND D12.

8. HANDRAILS AND GRAB BARS SHALL BE BETWEEN $1\frac{1}{4}$" AND $1\frac{1}{2}$" IN DIAMETER. THE SPACE BETWEEN THE WALL AND THE GRAB BAR SHALL BE $1\frac{1}{2}$". THE SPACE BETWEEN THE GRAB BAR AND PROJECTING OBJECTS ABOVE SHALL BE 15" MINIMUM.

9. HOT WATER AND DRAIN PIPES UNDER LAVATORIES SHALL BE INSULATED OR OTHERWISE CONFIGURED TO PROTECT AGAINST CONTACT. THERE SHALL BE NO SHARP OR ABRASIVE SURFACES UNDER LAVATORIES.

10. MIRRORS SHALL BE MOUNTED WITH THE BOTTOM EDGE OF THE REFLECTING SURFACE 40 INCHES MAXIMUM ABOVE THE DECK SURFACE.

11. ACCESSIBLE ELEVATOR SHALL INCLUDE ALL ACCESSIBLE CONTROLS, INDICATORS AND SIGNAGE AS DETAILED IN THE SPECIFICATIONS.

12. CLEAR DECK SPACE SHALL BE 30" X 48" MINIMUM FOR MOST ACCESSIBLE AREAS.

13. OBJECTS WITH LEADING EDGES LOCATED BETWEEN 6 AND 80 INCHES ABOVE THE FINISHED DECK SURFACE SHALL PROTRUDE FROM THE WALL 4 INCHES MAXIMUM (WITH THE EXCEPTION OF HANDRAILS, WHICH SHALL PROTRUDE $4\frac{1}{2}$" MAXIMUM) INTO THE CIRCULATION PATH.

14. PROTRUDING OBJECTS SHALL NOT REDUCE THE CLEAR WIDTH REQUIRED FOR ACCESSIBLE ROUTES.

15. REACH RANGES SHALL BE IN ACCORDANCE WITH REFERENCE 2.

16. DETECTABLE WARNINGS ON WALKING SURFACES (AT BASE OF STAIRWAYS) SHALL CONSIST OF RAISED TRUNCATED DOMES WITH A NOMINAL DIAMETER OF 0.9", A HEIGHT OF NOMINAL 0.2" AND A CENTER-TO-CENTER SPACING OF NOMINAL 2.35" AND SHALL CONTRAST VISUALLY WITH ADJOINING SURFACES, EITHER LIGHT-ON-DARK OR DARK-ON-LIGHT.

17. HANDRAILS SHALL EXTEND BEYOND THE TREADS OF ALL STAIRWAYS (TOP AND BOTTOM) AS INDICATED IN DETAIL C9.

18. THE UNDERSIDES OF STAIR NOSINGS SHALL NOT BE ABRUPT. THE RADIUS OF CURVATURE AT THE LEADING EDGE OF THE TREAD SHALL BE NO GREATER THAN $\frac{1}{2}$". RISERS SHALL BE SLOPED OR THE UNDERSIDE OF THE NOSING SHALL HAVE AN ANGLE NOT LESS THAN 60 DEGREES FROM THE HORIZONTAL. NOSINGS SHALL PROJECT NO MORE THAN $1\frac{1}{2}$". SEE DETAIL B10 FOR STAIR CONSTRUCTION REFERENCE.

19. THE SWEEP PERIOD OF DOOR CLOSERS SHALL BE ADJUSTED SO THAT FROM AN OPEN POSITION OF 70 DEGREES, THE DOOR WILL TAKE AT LEAST 3 SECONDS TO MOVE TO A POINT 3" FROM THE LATCH, MEASURED TO THE LEADING EDGE OF THE DOOR.

20. AUDIBLE EMERGENCY ALARMS SHALL PRODUCE A SOUND THAT EXCEEDS THE PREVAILING EQUIVALENT SOUND LEVEL IN THE SPACE BY AT LEAST 15 DBA OR EXCEEDS ANY MAXIMUM SOUND LEVEL WITH A DURATION OF 60 SECONDS BY 5 DBA, WHICHEVER IS LOUDER. SOUND LEVELS FOR ALARM SIGNALS SHALL NOT EXCEED 120 DBA.

21. ADA SIGNAGE SHALL BE PROVIDED IN ACCORDANCE WITH REF. 2 TO INDICATE ACCESSIBLE ROUTE FROM MAIN DECK TO 01 DECK STBD SIDE PASSENGER AREA.

STATE OF MAINE JOHN A. HUNTER NO. 10737 REGISTERED PROFESSIONAL ENGINEER

10-3-05

NO.	REFERENCES
3	–
2	–
1	–

APPROVALS:	SUBMIT DATE	APPROVED BY	APPROVED DATE	RE-SUBMIT DATE	APPROVED BY	APPROVED DATE
OWNER	–	–	–	–	–	–
USCG	–	–	–	–	–	–
ABS	–	–	–	–	–	–
USPHS	–	–	–	–	–	–

Seaworthy Systems, Inc.
MARINE ENGINEERS NAVAL ARCHITECTS
P.O. BOX 965
ESSEX, CT 06426
USA
TEL: 860-767-9061
FAX: 860-767-1263

CHECKED BY	AUTH. BY	SCALE
JAH 09-30-05	JAH 09-30-05	N.T.S.
DRAWN BY JEK	ORIG. DATE 8/26/05	DIMS IN INCHES UNLESS OTHERWISE STATED

FOR

MAINE STATE FERRY SERVICE
P.O. BOX 645, 517A MAIN STREET
ROCKLAND, ME 04841-0645

TITLE 154' RO/RO/PASS FERRY

ADA DETAILS

SIZE	DRG No.	REV.	SHEET
D	575-02-602	–	1 OF 1

SSI FILE No. s:\active\projumb\575-02\575-02-602.dwg

DO NOT SCALE, IF IN DOUBT ASK

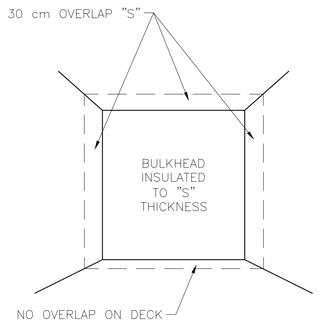

DETAIL 8D

INSULATION OVERLAP REQUIREMENT

N.T.S.

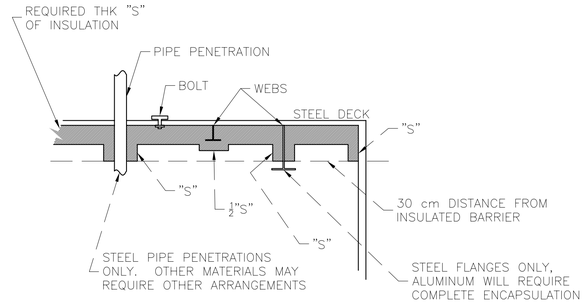

DETAIL 7D

INSULATION OVERLAP DETAILS

N.T.S.

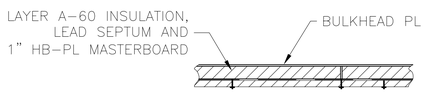

DETAIL 7C

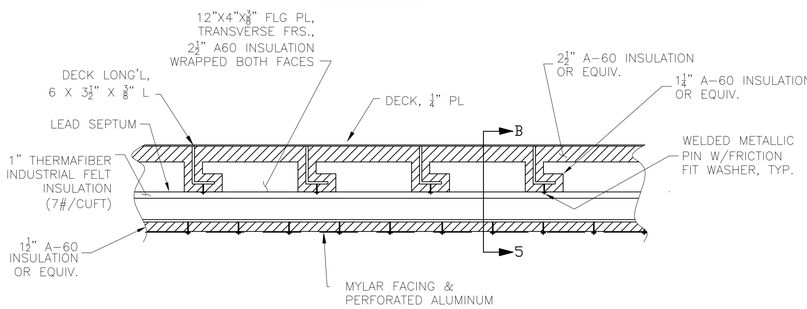

SECTION 8B

ENGINE ROOM OVERHEAD INSULATION

1"=1'

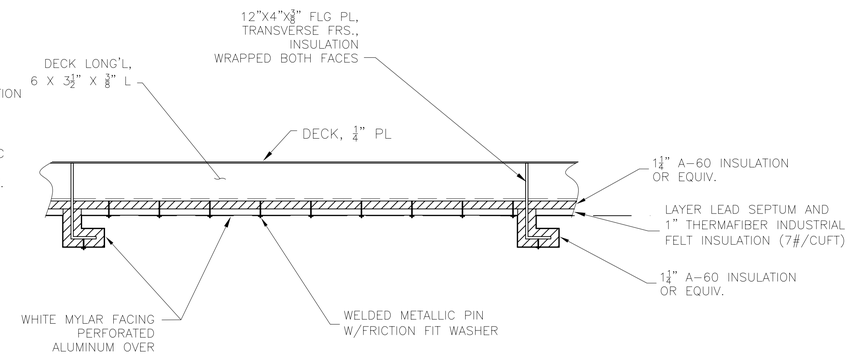

SECTION 5B

ENGINE ROOM OVERHEAD INSULATION

1"=1'

GENERAL NOTES (CONT'D):

13. BULKHEAD TO BULKHEAD JOINTS AND BULKHEAD TO OVERHEAD JOINTS SHALL BE OVERLAPPED FOR A DISTANCE OF 30 CM (12 IN.) AT THE FULL THICKNESS OF THE INSULATION. SEE DETAIL E10.

14. ALL SEAMS AND PENETRATIONS ARE TO BE COVERED WITH A USCG APPROVED REINFORCED POLYESTER TAPE.

15. B-0 CLASS BULKHEADS ARE TO BE A MINIMUM OF $\frac{1}{16}$" THICK STEEL AND SUITABLY STIFFENED.

16. C CLASS BULKHEADS ARE TO BE OF NONCOMBUSTIBLE CONSTRUCTION.

17. MAS MARINE INSULATION, 3" THICK BLANKET, FABRICATED WITH 2 MIL ALUMINUM FOIL BARRIER FACING. INSULATION TO BE SECURED WITH 12 GAUGE WELD PINS AND CLIPS WITH JOINTS AND PENTERATIONS SEALED WITH PRESSURE SENSITIVE FOIL TAPE CONFORMING TO USCG 164.012.

18. MAIN AND SECOND DECK CABIN OVERHEAD THERMAL INSULATION TO BE COVERED WITH 1" THICK, HB-PL MASTERBOARD (USCG 164.109) AND FACED WITH MAS-CF FIBERGLASS CLOTH (USCG 164.009).

19. WINDOWS FACING AREAS OF REFUGE SHALL BE FITTED IN A FRAMING SYSTEM WITH STEEL CLIPS DESIGNED TO HOLD THE GLASS IN PLACE IN THE EVENT OF A FIRE.

20. ALL PINS TO BE FITTED WITH CAPS.

REVISIONS

REV.	DATE	DESCRIPTION	SHEET	ZONE	AUTH^{D}
A	01/13/2006	REVISION OF BOUNDARIES BASED ON GA REVS	2,3,4,5	MULT.	JAH
B	–	–			
C	–	–			
D	–	–			

GENERAL NOTES:

1. ALL MATERIALS, WORKMANSHIP AND INSTALLATION TO MEET THE REQUIREMENTS OF CFR 46 SUBCHAPTER H AND BE TO THE SATISFACTION OF THE USCG OCMI.

2. ALL DIMENSIONS ARE APPROXIMATE AND SHOULD BE VERIFIED IN THE FIELD PRIOR TO INSTALLATION.

3. BULKHEADS AND DECKS ARE TO BE CONSTRUCTED AS INDICATED, BASED ON DEFINITIONS PROVIDED IN 46 CFR 72.05-10.

4. INSULATION IS TO BE CAREFULLY FITTED TO MINIMIZE NOISE TRANSMISSION.

5. ELEVATOR IS TO BE BUILT TO ANSI/ASME A17.1 SPECIFICATIONS WITH DOORS HAVING A 1½ HOUR RATING. INSULATION OF TRUNK SHALL BE AS INDICATED ON THIS DRAWING.

6. A-0 CLASS BULKHEADS AND DECKS ARE TO BE MINIMUM $\frac{1}{8}$" THICK STEEL AND SUITABLY STIFFENED.

7. BASE INSULATION TO BE 'S' = 2½" THICK, 7 LB MASTERSHIELD (THERMAFIBER INDUSTRIAL FELT MINERAL WOOL, USCG APPROVAL 164.$^{007}/_{0040}$/0). ANY SUBSTITUTIONS SHALL PROVIDE EQUIVALENT LEVEL OF INSULATION AND SHALL BE USCG APPROVED.

8. WHERE A-60 CLASS BULKHEADS AND DECKS ARE REQUIRED, INSTALL 'S' THICKNESS AGAINST DECK AND FACE WITH MAS-CF FIBERGLASS CLOTH (USCG 164.009). BULKHEAD/DECK STIFFENERS TO BE WRAPPED WITH ½ 'S' THICKNESS INSULATION AS INDICATED IN DETAIL 8A.

9. WHERE A-60 CLASS DECKS ARE INDICATED TO BE POURED INSULATION DECKING, DEX-O-TEX DECKLITE DECKING IS TO BE INSTALLED, WITH MAGNESITE (MAGNESIUM OXYCHLORIDE CEMENT) OVER ⅛" THICK "MAGNABOND#3" COATING FOR TOTAL THICKNESS OF 1.375 INCHES IN ACCORDANCE WITH MANUFACTURER'S INSTRUCTIONS.(USCG APPROVAL 164.006/64/0.)

10. WHERE A-30 CLASS BULKHEADS AND DECKS ARE REQUIRED, INSTALL ¾ 'S' THICKNESS AGAINST BULKHEAD OR DECK AND FACE WITH MAS-CF FIBERGLASS CLOTH (USCG 164.009). BULKHEAD/DECK STIFFENERS TO BE WRAPPED WITH ⅜ 'S' THICKNESS INSULATION AS INDICATED IN DETAIL 6A.

11. IN THE ENGINE ROOM OVERHEAD (A-60 CLASS), INSTALL 'S' THICKNESS A-60 INSULATION, LEAD SEPTUM INSERT AND AN ADDITIONAL 1" THICK HB-PL MASTERBOARD (USCG 164.109) AGAINST DECK LONGITUDINALS WITH MAS-CF FIBERGLASS CLOTH (USCG 164.009) AND PERFORATED ALUMINUM LAYER OVER TOP. SEE DETAIL C11 AND SECTION B11. ENGINE ROOM OVERHEAD INSULATION TO BE CONTINUED DOWN FORWARD AND AFT BULKHEADS AND SIDE SHELL PLATING FOR A DISTANCE OF 7 FEET.

12. ENGINE UPTAKES TO BE INSULATED WITH 'S' THICKNESS A-60 INSULATION, LEAD SEPTUM INSERT AND AN ADDITIONAL 1" HB-PL MASTERBOARD (USCG 164.109) AGAINST THE BULKHEAD, COVERED WITH MAS-CF FIBERGLASS CLOTH AS SHOWN IN DETAIL C7.

13. BULKHEAD AND DECK STRUCTURAL FIRE PROTECTION INSULATION TO BE INSTALLED WITH STEEL PINS ON LESSER OF 12" CENTERS OR MANUFACTURER'S SPECIFICATIONS, AND SECURED WITH FRICTION FIT WASHERS. PINS TO BE LOCATED NO MORE THAN 2" AWAY FROM BLANKET JOINTS.

14. THE INSULATION OF A BULKHEAD SHALL EXTEND OVER ANY PROTRUSIONS OUT TO 30 CM (12 IN.) NORMAL FROM THE BULKHEAD. FOR PROTRUSIONS THAT ARE FULLY WRAPPED, SUCH AS SMALL STIFFENERS, THE INSULATION THICKNESS NEED ONLY BE HALF OF WHAT IS REQUIRED FOR THE BULKHEAD. FOR PROTRUSIONS THAT ARE NOT FULLY COVERED BECAUSE THEY EXTEND OUT MORE THAN 30 CM (12 IN.) SUCH AS DEEP WEBS, PIPES, CABLES, OR VENT DUCTING, THE INSULATION SHALL BE THE SAME THICKNESS AS THE BULKHEAD INSULATION OUT TO A DISTANCE OF 30 CM (12 IN.). SEE DETAILS 8D AND 7D.

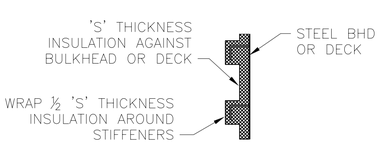

DETAIL 8A

A-60 BULKHEAD OR DECK INSULATION

N.T.S.

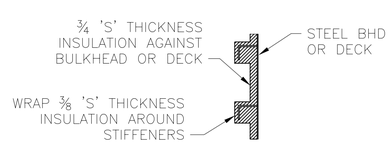

DETAIL 6A

A-30 BULKHEAD OR DECK INSULATION

N.T.S.

KEY

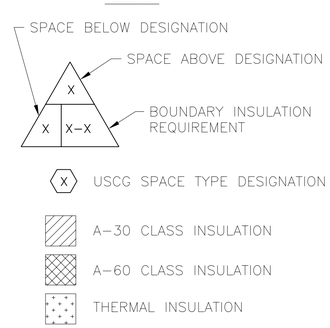

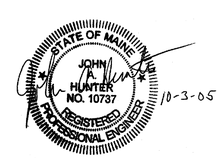

NO.	REFERENCES
3	–
2	–
1	USCG NVIC 9-97, GUIDE TO STRUCTURAL FIRE PROTECTION

APPROVALS:	SUBMIT DATE	APPROVED BY	APPROVED DATE	RE-SUBMIT DATE	APPROVED BY	APPROVED DATE
OWNER	–	–	–	–	–	–
USCG	–	–	–	–	–	–
ABS	–	–	–	–	–	–
USPHS	–	–	–	–	–	–

Seaworthy Systems, Inc.
P.O. BOX 965
ESSEX, CT 06426
USA
TEL: 860-767-9061
FAX: 860-767-1263
MARINE ENGINEERS NAVAL ARCHITECTS

CHECKED BY	AUTH^{D} BY	SCALE
JAH	JAH 07/13/05	AS NOTED
DRAWN BY JEK	ORIG^{D} DATE 07/13/05	DIMS IN INCHES UNLESS OTHERWISE STATED

FOR **MAINE STATE FERRY SERVICE**
P.O. BOX 645, 517A MAIN STREET
ROCKLAND, ME 04841-0645

TITLE 154' RO/RO/PASS FERRY

STRUCTURAL FIRE PROTECTION AND INSULATION DETAILS

SIZE	DRG No.	REV.	SHEET
D	575-02-635	A	1 OF 5

SSI FILE No. s:\active\projnumb\575-02\575-02-635.dwg

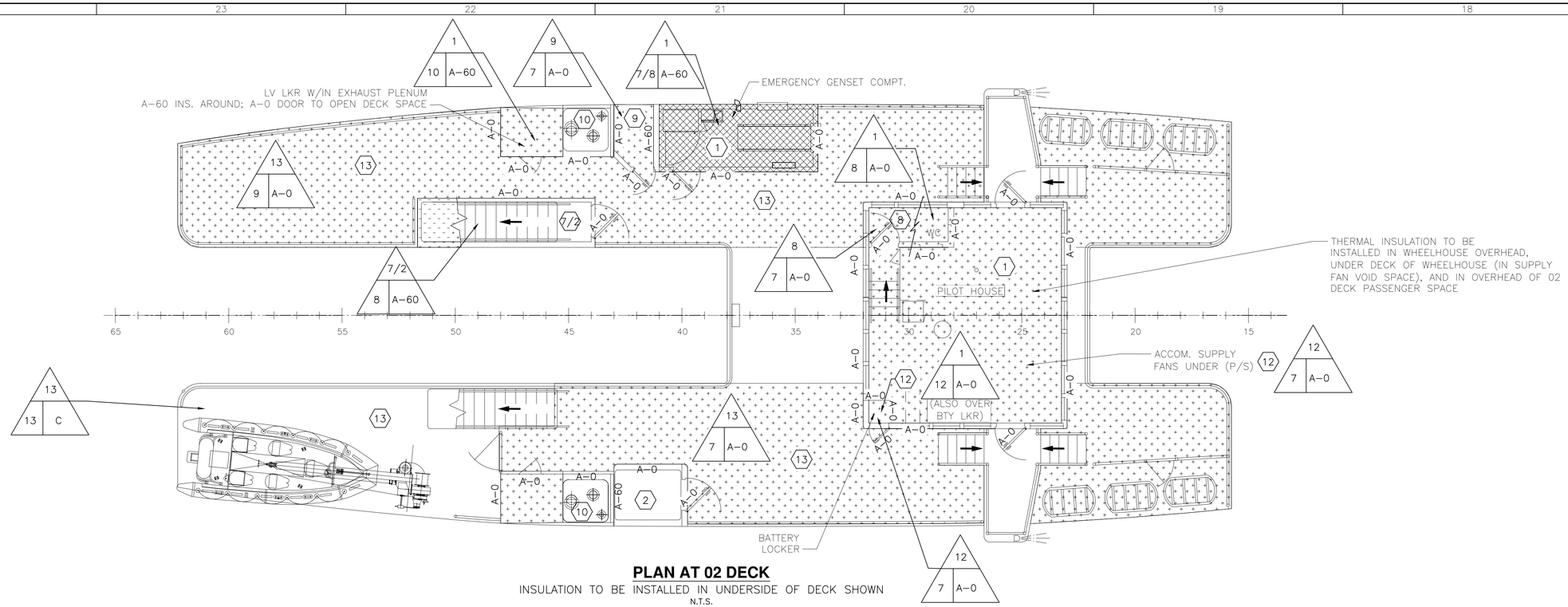

PLAN AT 02 DECK

INSULATION TO BE INSTALLED IN UNDERSIDE OF DECK SHOWN

N.T.S.

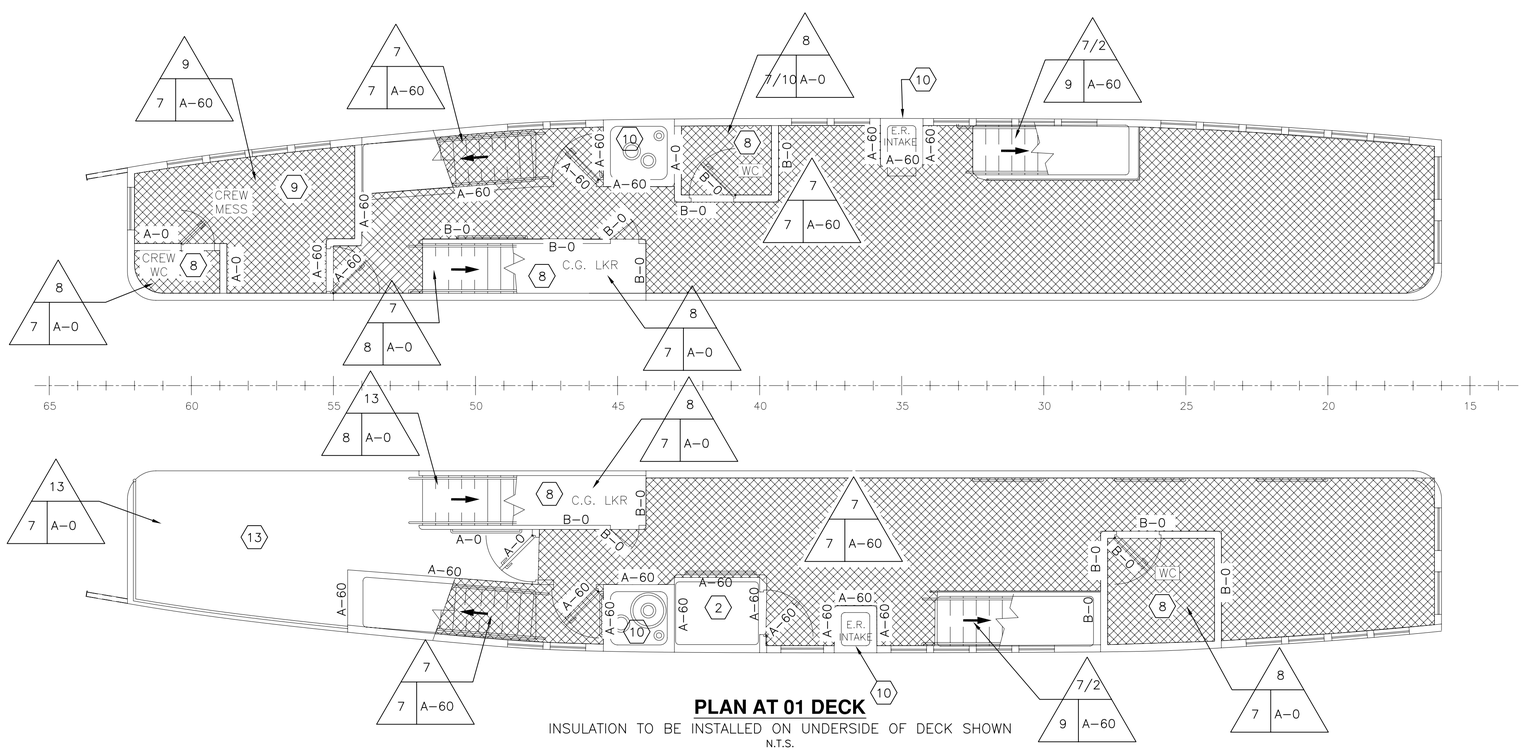

PLAN AT 01 DECK

INSULATION TO BE INSTALLED ON UNDERSIDE OF DECK SHOWN

N.T.S.

KEY

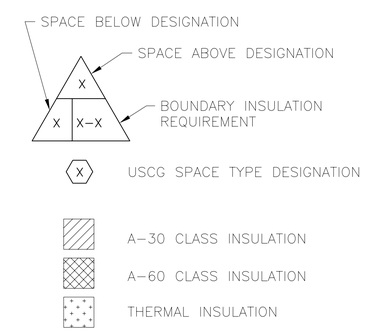

Seaworthy Systems, Inc.
MARINE ENGINEERS NAVAL ARCHITECTS
P.O. BOX 965
ESSEX, CT 06426
USA
TEL: 860-767-9061
FAX: 860-767-1263

FOR
MAINE STATE FERRY SERVICE
P.O. BOX 645, 517A MAIN STREET
ROCKLAND, ME 04841-0645

TITLE 154' RO/RO/PASS FERRY

STRUCTURAL FIRE PROTECTION AND INSULATION DETAILS

SCALE		SIZE	DRG No.	REV.	SHEET
N.T.S.	DIMS IN INCHES UNLESS OTHERWISE STATED	D	575-02-635	A	3 OF 5

SSI FILE No. s:\active\projnumb\575-02\575-02-635.dwg

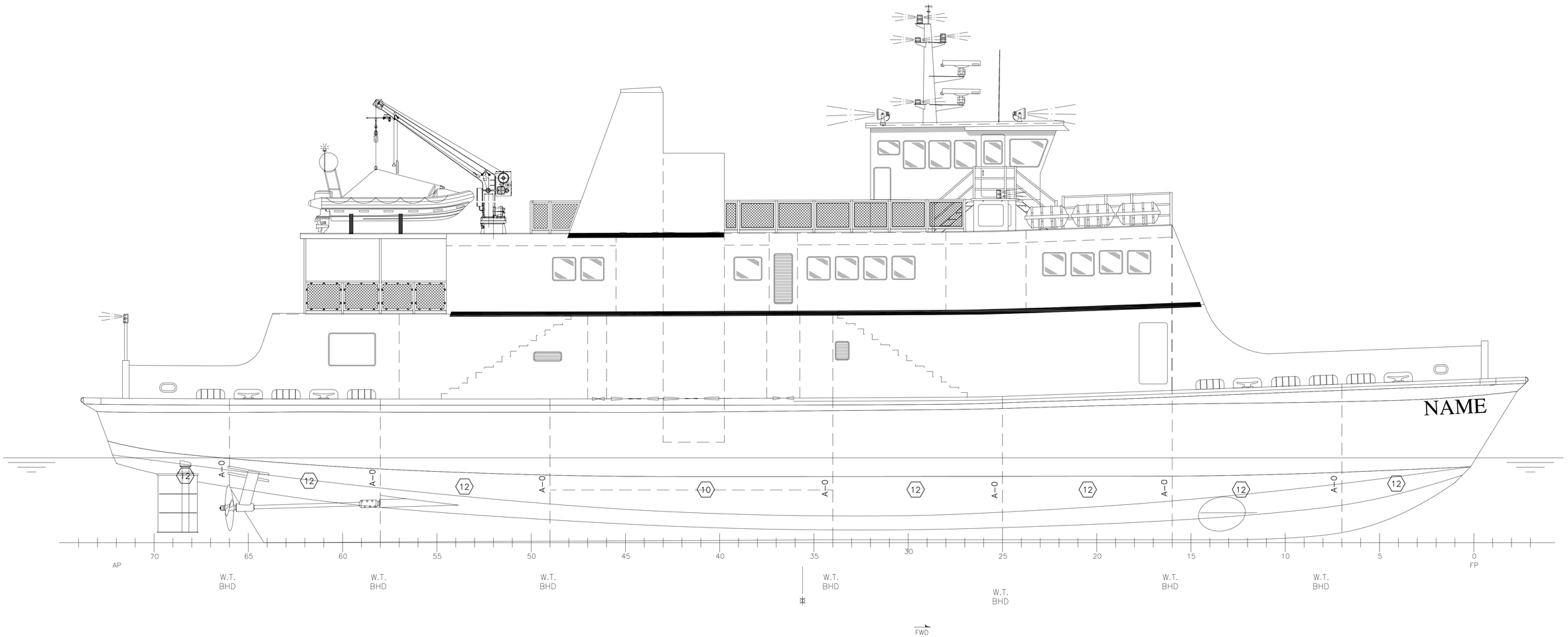

OUTBOARD PROFILE

STBD SIDE

N.T.S.

KEY

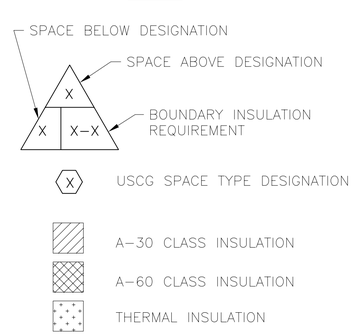

Seaworthy Systems, Inc.
MARINE ENGINEERS NAVAL ARCHITECTS
P.O. BOX 965
ESSEX, CT 06426
USA
TEL: 860-767-9061
FAX: 860-767-1263

SCALE: N.T.S.

DIMS IN INCHES UNLESS OTHERWISE STATED

FOR
MAINE STATE FERRY SERVICE
P.O. BOX 645, 517A MAIN STREET
ROCKLAND, ME 04841-0645

TITLE 154' RO/RO/PASS FERRY

STRUCTURAL FIRE PROTECTION AND INSULATION DETAILS

SIZE	DRG No.	REV.	SHEET
D	575-02-635	A	2 OF 5

SSI FILE No. s:\active\projnumb\575-02\575-02-635.dwg

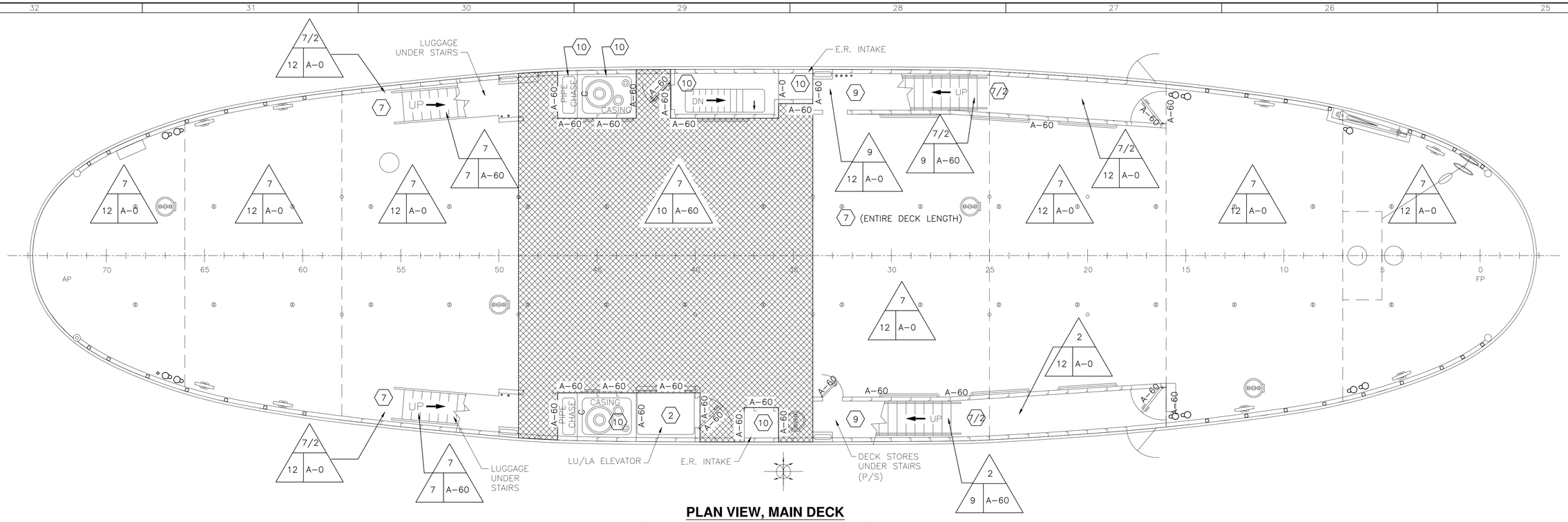

PLAN VIEW, MAIN DECK

INSULATION TO BE INSTALLED IN UNDERSIDE OF DECK SHOWN

N.T.S.

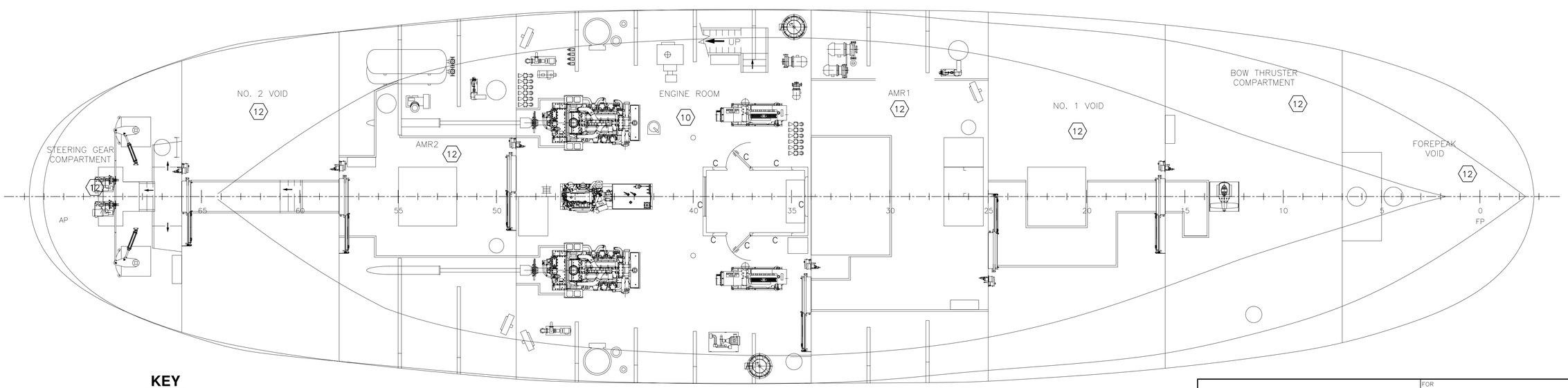

PLAN VIEW BELOW MAIN DECK

N.T.S.

KEY

- A–30 CLASS INSULATION
- A–60 CLASS INSULATION
- THERMAL INSULATION

SPACE BELOW DESIGNATION
SPACE ABOVE DESIGNATION
BOUNDARY INSULATION REQUIREMENT

X — USCG SPACE TYPE DESIGNATION

Seaworthy Systems, Inc.
MARINE ENGINEERS NAVAL ARCHITECTS
P.O. BOX 965
ESSEX, CT 06426
USA
TEL: 860–767–9061
FAX: 860–767–1263

FOR
MAINE STATE FERRY SERVICE
P.O. BOX 645, 517A MAIN STREET
ROCKLAND, ME 04841–0645

TITLE
154' RO/RO/PASS FERRY
STRUCTURAL FIRE PROTECTION AND INSULATION DETAILS

SCALE	DIMS IN INCHES UNLESS OTHERWISE STATED	SIZE	DRG No.	REV	SHEET
N.T.S.		D	575–02–635	A	4 OF 5

SSI FILE No. s:\active\projnumb\575–02\575–02–635.dwg

Joiner Doors

All doors must meet requirements of 72.05-25.

Door	Location DK	Location FR	Space	Qty.	Sill Height	Clear Opening	Mat'l	Glass Thick.	Glass Size	Glass Type	Fire Rating	Comments
1	Mn	17 P/S	Stairwell	2	3"	3'-0" x 6'-8"	304SS	3/8"	100 sq.in.	wire	A-60	self-closing, ADA weatherstripped
2	Mn	34 S	Deck Locker	1	3"	2' 0" x 6'-8"	304SS	none	none	none	A-60	ADA weatherstripped
3	Mn	57 P/S	Stairwell	2	3"	3'-0" x 6'-8"	304SS	3/8"	100 sq.in.	wire	A-60	self-closing, ADA weatherstripped
4	01	27 S	Head	1	1/4"	3'-0" x 6'-8"	304SS	none	none	none	B-0	self-closing, ADA
5	01	25 P	Head	1	1/4"	3'-0" x 6'-8"	304SS	none	none	none	B-0	self-closing, ADA
6	01	45 P/S	Deck Locker	2	3"	2'-0" x 6'-8"	304SS	none	none	none	B-0	ADA weatherstripped
7	01	48 S	Passenger	1	1/4"	3'-0" x 6'-8"	304SS	3/8"	24" x 30"	wire	A-0	self-closing, ADA weatherstripped, thermally insulated
8	01	55 P	Crew Mess	1	1/4"	3'-0" x 6'-8"	304SS	none	none	none	A-60	self-closing, ADA
9	01	60 P	Crew Head	1	1/4"	2'-6" x 6'-8"	304SS	none	none	none	A-0	self-closing, ADA
10	02	26 P/S	Pilot House	2	3"	2'-6" x 6'-8"	304SS	3/8"	24" x 30"	tempered	A-0	self-closing, ADA weatherstripped
11	Mn, 01 02	40 S	Elevator	3	1/4"	3'-0" x 6'-8"	304SS	3/8"	100 sq.in.	wire	UL B 1.5 hr (450°F), A-15	supplied w/elevator
12	Eng Rm	37 P/S	Noise Ctrl Booth	2	3"	2'-6" x 6'-8"	304SS	tbd	24" x 30"	tbd	C	self-closing, ADA weatherstripped, thermally insulated
13	02	31 P	Pilot House Head	1	3"	2'-6" x 6'-8"	304SS	none	none	none	A-0	ADA weatherstripped
14	02	40 P	EDG	1	3"	2'-6" x 6'-8"	304SS	none	none	none	A-0	ADA weatherstripped
15	02	44 P	Passenger	1	1/4"	3'-0" x 6'-8"	304SS	3/8"	24" x 30"	wire	A-0	self-closing, ADA weatherstripped, thermally insulated
16	02	42 P	Deck locker	1	3"	2'-6" x 6'-8"	304SS	none	none	none	A-0	ADA weatherstripped
17	02	31 S	Battery Locker	1	3"	2'-0" x 6'-8"	304SS	none	none	none	A-0	ADA weatherstripped
				24	Total Joiner Doors							

Watertight Doors

								Class				
1	Mn	37 P	Eng Rm	1	6"	2'-4" x 6'-6"	CS	1	none	none	A-0	Quick Acting w/Lever & hold back
2	Mn	17 P/S	Muster	2	6"	3' - 0"x 6' -6"	CS	1	none	none	A-0	Quick Acting w/Lever & hold back
3	Hold	16	BHD	1	6"	3' - 0"x 6' -6"	CS	3	none	none	A-0	ASTM F1196 & F1197
4	Hold	25	BHD	1	6"	3' - 0"x 6' -6"	CS	3	none	none	A-0	ASTM F1196 & F1197
5	Hold	34	BHD	1	6"	3' - 0"x 6' -6"	CS	3	none	none	A-0	ASTM F1196 & F1197
6	Hold	49	BHD	1	6"	3' - 0"x 6' -6"	CS	3	none	none	A-0	ASTM F1196 & F1197
7	Hold	58	BHD	1	6"	3'-0" x 6'-6"	CS	3	none	none	A-0	ASTM F1196 & F1197
8	Hold	66	BHD	1	6"	2'-6" x 5'-0"	CS	3	none	none	A-0	ASTM F1196 & F1197
				9	Total WT Doors							

Windows

Location	FR	Qty.	Rough Opening	Style	Model No.	Frame Material	Glass Tint	Glass Type	Glass Thick.	Comments
01 DK	16 P/S	4	36"x30"	Half-drop	CC-1338	CRES	No	Lamin.	3/8"	Fire clips
01 DK	18 P/S	2	36" x 30"	Half-drop	CC-1338	CRES	No	Lamin.	3/8"	Fire clips
01 DK	21 P/S	2	36" x 30"	Half-drop	CC-1338	CRES	No	Lamin.	3/8"	Fire clips
01 DK	37 P	1	36"x30"	Half-drop	CC-1338	CRES	No	Tempered	3/8"	
01 DK	39 P/S	2	36"x30"	Half-drop	CC-1338	CRES	No	Tempered	3/8"	
01 DK	41 P	1	36"x30"	Half-drop	CC-1338	CRES	No	Tempered	3/8"	
01 DK	35 S	1	30" x 30"	Half-drop	CC-1338	CRES	No	Tempered	3/8"	
01 DK	47 P	1	36"x30"	Half-drop	CC-1338	CRES	No	Tempered	3/8"	
01 DK	56 P	1	36"x30"	Half-drop	CC-1338	CRES	No	Tempered	3/8"	
01 DK	59 P	1	36"x30"	Half-drop	CC-1338	CRES	No	Tempered	3/8"	
01 DK	47 S	1	36"x30"	Half-drop	CC-1338	CRES	No	Tempered	3/8"	
01 DK	62 P	1	36"x 30"	Half-drop	CC-1338	CRES	No	Lamin.	3/8"	Fire clips
PH	23	3	36"x 30"	fixed	CC-1208	CRES	No	Lamin.	1/2"	Heated and wiper
PH	23	2	36"x 30"	open out	CC-1337	CRES	No	Tempered	3/8"	
PH	23	2	36"x24"	open out	CC-1337	CRES	No	Tempered	3/8"	
PH	32	1	36"x 30"	fixed	CC-1208	CRES	No	Lamin.	1/2"	Heated and wiper
PH	32	3	36"x 30"	open out	CC-1337	CRES	No	Tempered	3/8"	
PH	32	1	36"x 24"	fixed	CC-1305	CRES	No	Tempered	3/8"	
PH	32	2		fixed	CC-1305	CRES	No	Tempered	3/8"	
PH	29-31 P	3		fixed	CC-1305	CRES	No	Tempered	3/8"	
PH	27 P/S	2	36" x 28.5"	Half-drop	CC-1338	CRES	No	Tempered	3/8"	
PH	28-31 P	3	36" x 28.5"	fixed	CC-1305	CRES	No	Tempered	3/8"	
PH	24 P/S	2	tbd	fixed	CC-1305	CRES	No	Tempered	3/8"	

DO NOT SCALE, IF IN DOUBT ASK

REVISIONS					
REV.	DATE	DESCRIPTION	SHEET	ZONE	AUTH^{D}
A	01/06/2005	FURNISHINGS ARRG'T REVS PER MSFS COMMENTS	1	6–C	JAH
B	–	–			
C	–	–			
D	–	–			

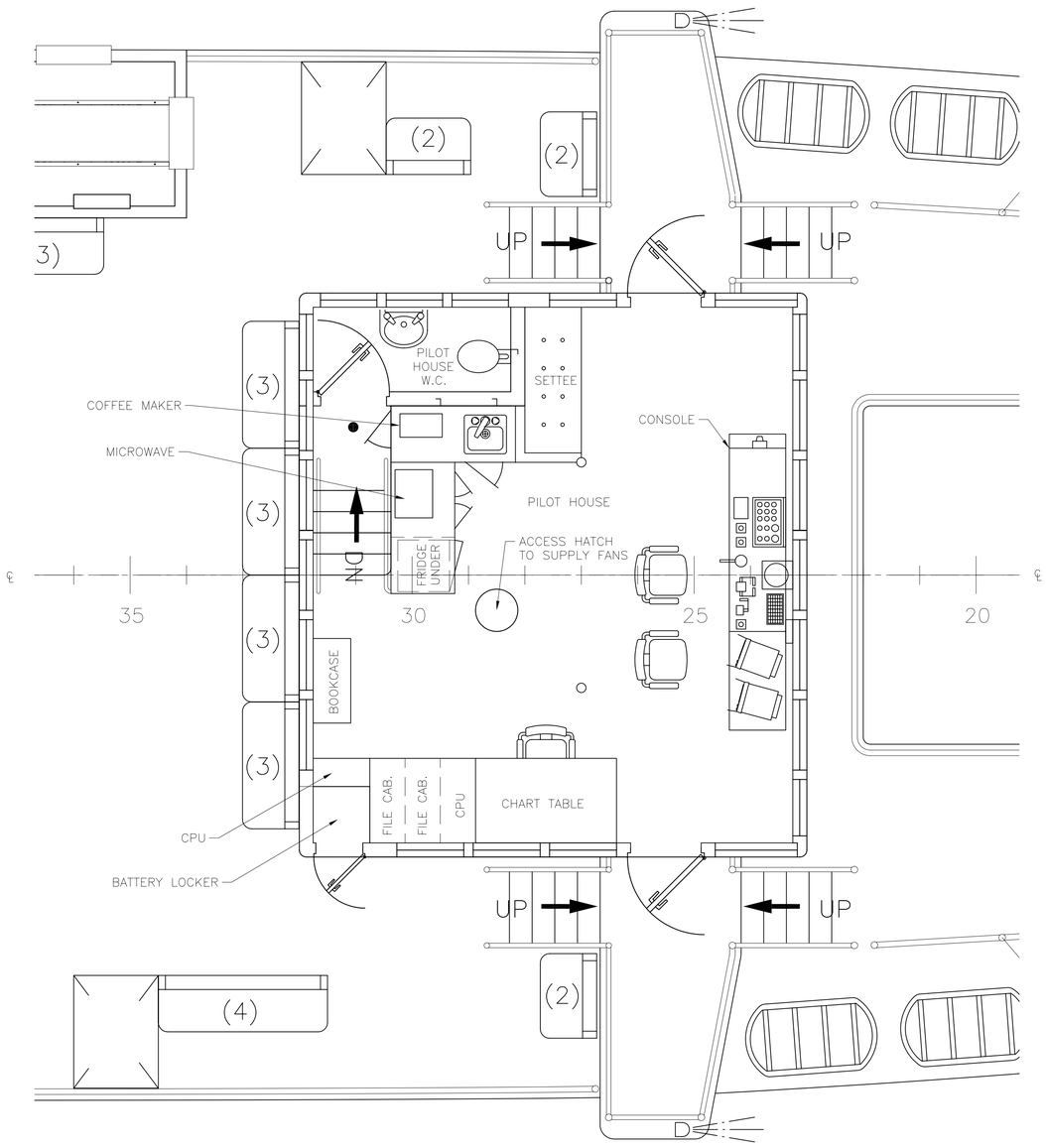

PLAN VIEW

PILOT HOUSE GENERAL ARRANGEMENT

SCALE: 3/8 IN = 1 FT

GENERAL NOTES:

1. ALL MATERIALS, WORKMANSHIP AND INSTALLATION TO MEET THE REQUIREMENTS OF CFR 46 SUBCHAPTER H AND BE TO THE SATISFACTION OF THE USCG OCMI.

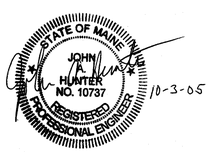

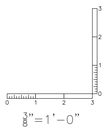

ITEM	PART CODE	DESCRIPTION	MATERIAL	QTY
5	–	–	–	–
4	–	–	–	–
3	–	–	–	–
2	–	–	–	–
1	–	–	–	–

BILL OF MATERIALS

NO.	REFERENCES
3	–
2	–
1	–

APPROVALS:	SUBMIT DATE	APPROVED BY	APPROVED DATE	RE–SUBMIT DATE	APPROVED BY	APPROVED DATE
OWNER	–	–	–	–	–	–
USCG	–	–	–	–	–	–
ABS	–	–	–	–	–	–
USPHS	–	–	–	–	–	–

Seaworthy Systems, Inc.
MARINE ENGINEERS NAVAL ARCHITECTS
P.O. BOX 965
ESSEX, CT 06426
USA
TEL: 860–767–9061
FAX: 860–767–1263

FOR

MAINE STATE FERRY SERVICE
P.O. BOX 645, 517A MAIN STREET
ROCKLAND, ME 04841–0645

TITLE 154' RO/RO/PASS FERRY

PILOT HOUSE GENERAL ARRANGEMENT

CHECKED BY	AUTH^{D} BY	SCALE
JAH 09–30–05	JAH 09–30–05	NONE
DRAWN BY	ORIG^{L} DATE	
LAG	09–27–05	DIMS IN INCHES UNLESS OTHERWISE STATED

SIZE	DRG No.	REV.	SHEET
D	575–02–661	A	1 OF 1

SSI FILE No. s:\active\projnumb\575–02\575–02–661.dwg