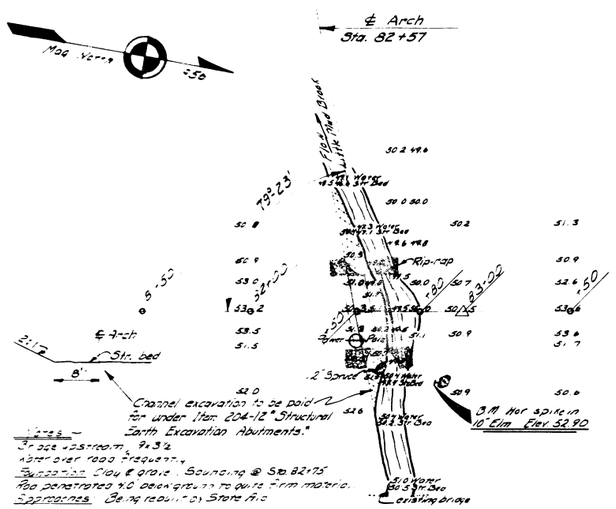

—PLAN—

Scale: 1" = 30'

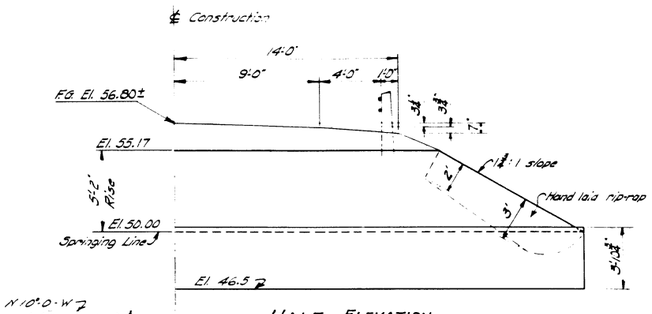

HALF ELEVATION

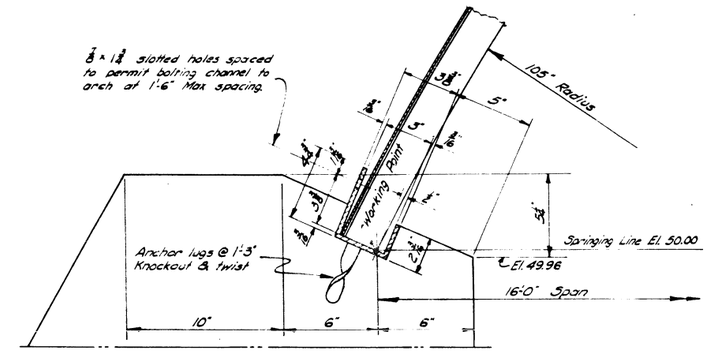

UNBALANCED CHANNEL

Fill channel on both sides with asphaltic material.

Unbalanced channel to be furnished in lengths of 6 to 12 feet to make up 52 feet for each abutment. Other types of lugs may be used to anchor channel if approved by the Engineer.

Channels shall be not dip galvanized after fabrication.

Locate construction joints at center of abutments; unbalanced channel to fit joints.

Reinforcing steel to extend thru construction joints.

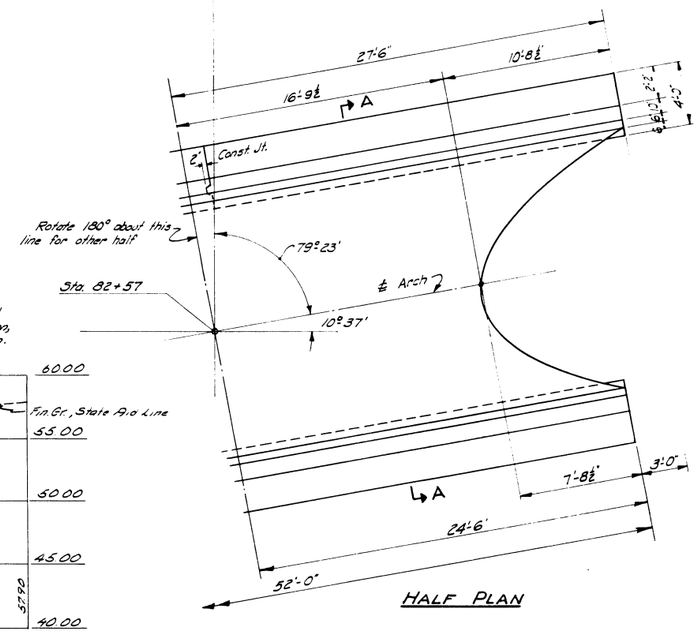

HALF PLAN

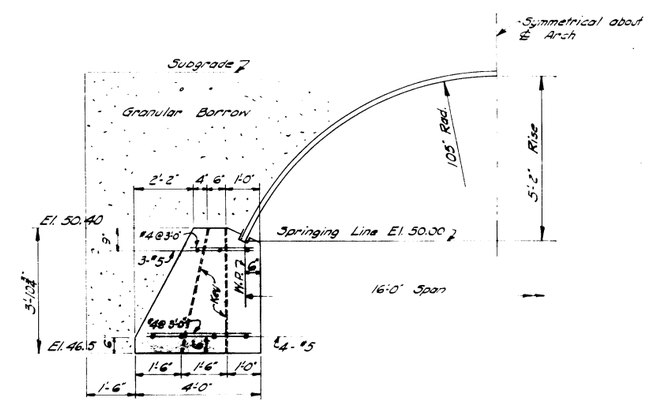

HALF SECT. A-A

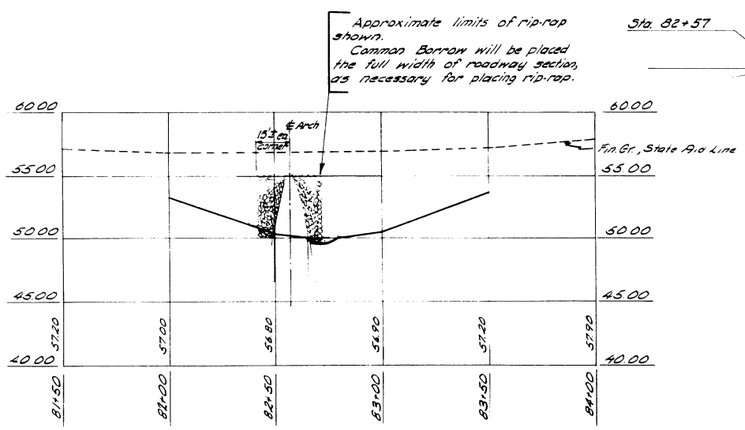

—PROFILE—

Scales: Hor. 1" = 30', Vert. 1" = 5'

MATERIAL REQUIRED

One structural plate arch, #5 gage with ends cut to slope and skew as shown, Span 16'-0", Rise 5'-2". 104 feet unbalanced channel.

Span and Rise may be varied slightly if approved by the Engineer. Any such changes shall be furnished to the Engineer before construction is started.

Length for payment 52'-0"

Reinforcing Steel: 14-#5 x 27'-0" } Splice
14-#5 x 25'-6" }
18-#4 x 3'-3" } Tie bars
18-#4 x 1'-9" }

Specifications - State of Maine - Standard 1956
Loading - H20-44

Concrete - Class B

DESIGN — G.W. Clark TRACE — " CHECK — FERGUSON	BRIDGE — 5707 SURVEY — BLAKE PLOT — BACHELDER

STATE HIGHWAY COMMISSION
BRIDGE DIVISION

LITTLE MUD BROOK BRIDGE

IN

PRENTISS PLANTATION

PENOBSCOT COUNTY

SHEET 1 OF 1 AUGUSTA, MAINE JULY 1956

64-187

0 1 2 3 4 5 INCHES