# BRUNSWICK
# &
# FREEPORT

# PIN 12841-12908-13094-13095

**Updated** 1/6/06

# FEDERAL PROJECT

**July 6, 2005**
**Supersedes August 4, 2004**

# BIDDING INSTRUCTIONS

FOR ALL PROJECTS:

1. Use pen and ink to complete all paper Bids.

2. As a minimum, the following must be received prior to the time of Bid opening:

   For a Paper Bid:
   a) a copy of the Notice to Contractors, b) the completed Acknowledgement of Bid Amendments form, c) the completed Schedule of Items, d) two copies of the completed and signed Contract Offer, Agreement & Award form, e) a Bid Guaranty, and f) any other certifications or Bid requirements listed in the Bid Documents as due by Bid opening.

   For an Electronic Bid:
   a) a completed Bid using Expedite® software and submitted via the Bid Express™ web-based service, b) a Bid Guaranty (as described below) or a faxed copy of a Bid Bond (with original to be delivered within 72 hours), and c) any other certifications or Bid requirements listed in the Bid Documents as due by Bid opening.

3. Include prices for all required items in the Schedule of Items. ("Zero is not considered a Bid price.")

4. Include a Bid Guaranty. Acceptable forms are:

   a. a properly completed and signed Bid Bond on the Department's prescribed form (or on a form that does not contain any significant variations from the Department's form as determined by the Department) for 5% of the Bid Amount or

   b. an Official Bank Check, Cashier's Check, Certified Check, U.S. Postal Money Order or Negotiable Certificate of Deposit in the amount stated in the Notice to Contractors.

5. If a paper Bid is to be sent, Federal Express overnight delivery is suggested as the package is delivered directly to the DOT Headquarters Building in Augusta. Other means, such as U.S. Postal Service's Express Mail has proven not to be reliable.

IN ADDITION, FOR FEDERAL AID PROJECTS:

6. Complete the DBE Proposed Utilization form in the proper amounts, and deliver to the Contracts section by 4:30 PM on bid opening day

If you need further information regarding Bid preparation, call the DOT Contracts Section at (207)624-3410.

For complete bidding requirements, refer to Section 102 of the Maine Department of Transportation, Standard Specifications, Revision of December 2002.

January 30, 2004
Supercedes February 11, 2003

# NOTICE

**The Maine Department of Transportation is attempting to improve the way Bid Amendments/Addendums are handled, and allow for an electronic downloading of bid packages from our website, while continuing to maintain a planholders list.**

**Prospective bidders, subcontractors or suppliers who wish to download a copy of the bid package and receive a courtesy notification of project specific bid amendments, must provide an email address to Diane Barnes or Mike Babb at the MDOT Contracts mailbox at: MDOT.contracts@maine.gov. Each bid package will require a separate request.**

**Additionally, interested parties will be responsible for reviewing and retrieving the Bid Amendments from our web site, and acknowledging receipt and incorporating those Bid Amendments in their bids using the Acknowledgement of Bid Amendment Form.**

**The downloading of bid packages from the MDOT website is not the same as providing an electronic bid to the Department. Electronic bids must be submitted via http://www.BIDX.com. For information on electronic bidding contract Larry Childs at Larry.Childs@maine.gov.**

# NOTICE

For security and other reasons, all Bid Packages which are mailed, shall be provided in double (one envelope inside the other) envelopes. The *Inner Envelope* shall have the following information provided on it:

Bid Enclosed - Do Not Open
PIN:
Town:
Date of Bid Opening:
Name of Contractor with mailing address and telephone number:

In Addition to the usual address information, the *Outer Envelope* should have written or typed on it:

Double Envelope: Bid Enclosed
PIN:
Town:
Date of Bid Opening:
Name of Contractor:
*This should not be much of a change for those of you who use Federal Express or similar services.*

Hand-carried Bids may be in one envelope as before, and should be marked with the following infrormation:

Bid Enclosed: Do Not Open
PIN:
Town:
Name of Contractor:

# STATE OF MAINE DEPARTMENT OF TRANSPORTATION

Bid Guaranty-Bid Bond Form

**KNOW ALL MEN BY THESE PRESENTS THAT**_____

_____, of the City/Town of _____and State of_____

as Principal, and _____as Surety, a

Corporation duly organized under the laws of the State of_____and having a usual place of

Business in _____and hereby held and firmly bound unto the Treasurer of

the State of Maine in the sum of_____,for payment which Principal and Surety bind

themselves, their heirs, executers, administrators, successors and assigns, jointly and severally.

The condition of this obligation is that the Principal has submitted to the Maine Department of Transportation, hereafter Department, a certain bid, attached hereto and incorporated as a part herein, to enter into a written contract for the construction of _____

_____

_____and if the Department shall accept said bid and the Principal shall execute and deliver a contract in the form attached hereto (properly completed in accordance with said bid) and shall furnish bonds for this faithful performance of said contract, and for the payment of all persons performing labor or furnishing material in connection therewith, and shall in all other respects perform the agreement created by the acceptance of said bid, then this obligation shall be null and void; otherwise it shall remain in full force, and effect.

Signed and sealed this_____day of _____20_____

WITNESS:

_____

_____

_____

WITNESS

_____

_____

_____

PRINCIPAL:

By_____

By:_____

By:_____

SURETY:

By_____

By:_____

Name of Local Agency: _____

SAMPLE

# NOTICE

Bidders:

Please use the attached “Request for Information” form when faxing questions and comments concerning specific Contracts that have been Advertised for Bid. Include additional numbered pages as required. Questions are to be faxed to the number listed in the Notice to Contractors. This is the only allowable mechanism for answering Project specific questions. Maine DOT will not be bound to any answers to Project specific questions received during the Bidding phase through other processes.

State of Maine
Department of Transportation

# REQUEST FOR INFORMATION

Date _____ Time _____

**Information Requested:** **PIN:** _____ **Town(s):** _____

_____

_____

_____

_____

_____

_____

_____

_____

_____

_____

_____

_____

**Request by:** _____ **Phone: (_____)**_____
**Bid Date:** _____ **Fax: (_____)**_____

**Complete top portion of form and transmit to the number listed in the Notice to Contractors**

**RFI No:** _____ **RFI received:** _____

**Response:**_____

_____

_____

_____

_____

_____

_____

_____

_____

_____

_____

Response By:_____ Date: _____

# NOTICE

## Disadvantaged Business Enterprise Proposed Utilization

The Apparent Low Bidder must submit the Disadvantaged Business Enterprise Proposed Utilization form by close of Business (4:30 P.M.) on Bid day.

The Contractor's Disadvantaged Business Enterprise Proposed Utilization Plan form contains additional information that is required by USDOT.

The Contractor's Disadvantaged Business Enterprise Proposed Utilization Plan form must be used.

A copy of the new Contractor's Disadvantaged Business Enterprise Proposed Utilization Plan and instructions for completing it are attached.

Note: Questions about DBE firms, or to obtain a printed copy of the DBE Directory, contact the Civil Rights Office at (207) 624-3066.

MDOTs DBE Directory of Certified firms can also be obtained at www.maine.gov/mdot/disadvantaged-business-enterprises/dbe-home.php

# INSTRUCTIONS FOR PREPARING THE CONTRACTOR'S DISADVANTAGED BUSINESS ENTERPRISE UTILIZATION PLAN

The Contractor Shall:

1. Submit a completed Contractor's Disadvantaged Business Enterprise Utilization Plan to the Contract's Engineer by 4:30 P.M. on the Bid day.

2. Extend equal opportunity to MDOT certified DBE firms (as listed in MDOT's DBE Directory of Certified Businesses) in the selection and utilization of Subcontractors and Suppliers.

SPECIFIC INSTRUCTIONS FOR COMPLETING THE FORM:

Insert Contractor name, the name of the person(s) preparing the form, and that person(s) telephone and fax number.

Provide total Bid price, Federal Project Identification Number, and location of the Project work.

In the columns, name each DBE firm to be used, provide the Unit or Item cost of the Work/Product to be provided by the DBE firm, give a brief description of the Work, and the dollar value of the Work.

If no DBE firm is to be utilized, the Contractor must document the reason(s) why no DBE firms are being used. Specific supporting evidence of good faith efforts taken by Contractors to solicit DBE Bidders must be attached. This evidence, as a minimum, includes phone logs, e-mail and/or mail DBE solicitation records, and the documented results of these solicitations.

# NOTICE

## Maine Department of Transportation
## Disadvantaged Business Enterprise Program

Notice is hereby given that in accordance with US DOT regulation 49 CFR Part 26, the Maine Department of Transportation has established a DBE Program for disadvantaged business participation in the federal-aid construction program; MaineDOT contracts covered by the program include consulting, construction, supplies, manufacturing, and service contracts.

For FFY 2006 (October 1, 2005 through September 30, 2006), MaineDOT has established a DBE participation goal of 5% to be achieved through race/gender neutral means, with an additional 1.6% to be achieved through race/gender conscious contract goals.

Interested parties may view MaineDOT's DBE goal setting methodology for the next 30 days during normal business hours (8-4, M-F) at the Maine Department of Transportation, Office of Civil Rights, 16 State House Station, Augusta ME 04333-0016. Appointments may be scheduled by telephone at (207) 624-3066. The goal setting methodology is also available for viewing on the MaineDOT website: http://www.maine.gov/mdot/disadvantaged-business-enterprises/dbe-home.php.

Comments on the goal will be accepted for 45 days from the date of this notice. Written comments should be addressed to Holly Anderson, Maine Department of Transportation, Civil Rights Office, 16 State House Station, Augusta, Maine 04333-0016 or by e-mail at: holly.anderson@maine.gov.

____ **Original Submission** **Page ___ of ___**

____ **Revision # _____**

**MaineDOT CONTRACTOR'S DISADVANTAGED BUSINESS ENTERPRISE PROPOSED UTILIZATION FORM**

**Low Bidder must furnish this form to Contracts Section Bid Opening day.**

**Contractor: _____** **Telephone: _____**

**Prepared by:_____** **Fax: _____**

**BID PRICE: $_____** **BID DATE: _____/_____/_____**

**FEDERAL PIN # _____** **PROJECT LOCATION: _____**

**TOTAL DBE _____ % PARTICIPATION FOR THIS PROJECT**

| WBE• | DBE• | Firm Name | Unit/Item Cost | Unit # | Description of Work & Item Number | Actual $ Value |
|---|---|---|---|---|---|---|
| | | | | | | |
| | | | | | | |
| | | | | | | |
| | | | | | | |
| | | | | | | |
| | | | | | | |
| | | | | | | |
| | | | | | | |
| | | | | | **Total ›** | |

**Attach supporting evidence to the maximum participation of DBEs on this project. This is a requirement. This evidence must include name of firm(s) contacted, date contacted, and outcome of solicitation.**

Equal Opportunity Use:

Form received: ___/___/___ Verified by: _____

____ Accepted ____ Rejected _____

cc: ☐ Contracts ☐ Other _____

- **WBEs are non-minority women owned firms certified by MaineDOT**
- **DBEs are male and minority owned firms certified by MaineDOT**

**For a complete list of certified firms go to http://www.state.me.us/mdot/disadvantaged-business-enterprises/dbe-home.php**

**Rev. 12/23/05**

# MaineDOT's

# CIVIL RIGHTS OFFICE

**To search for a specific work item, click on the binoculars, type in the word you want to search for and click on find. To go to the next selected item, click on the binoculars with the arrow.**

## MAINE DEPARTMENT OF TRANSPORTATION

### CERTIFIED DISADVANTAGED AND WOMEN BUSINESS ENTERPRISE

## DECEMBER 2005

**Information is updated on an ongoing basis and can be retrieved by visiting our Website:**
**www.maine.gov/mdot/disadvantaged-business-enterprises/dbe-home.php**

State of Maine

# VENDOR FORM

For New Vendors & for Updates on Current Vendors

Special Instructions:

PLEASE PRINT CLEARLY

**Return this form to:**

*** = MUST BE COMPLETED TO PROCESS**

**ONLY ONE NAME/VENDOR PER FORM**

| New Vendor | Address Change | Multi Address | Name Change | Contact Update | ID # Change |
|---|---|---|---|---|---|
| | | | | | |

Social Security Number*
Individual or Sole Proprietor

S

Business name in "DBA" field below.

***OR***

**Please fill in ONE.**

Federal Taxpayer ID Number*
Corporation

E

Business name in "Name" field below.

**This form will affect all transactions with ALL state agencies.**

| **NEW:*** | **OLD:** |
|---|---|
| **Remit to Address:** Individual or Business Name. | Old number: |
| Name* | Name |
| DBA or C/O | DBA or C/O |
| Address* | Address |
| | |
| | |
| Tel #* | Tel # |

| | | | |
|---|---|---|---|
| | Is this the same name on your Social Security card? | Acct # | |
| | If not, have you told Social Security about your name change? | Provider # | |

Signature*

Contact Name

Print Name or Title

Accounts Receivable Contact Name

Date* (within 3 months)

Phone # if Different or for Contact Info

Vendor Indicators: Enter Y (Yes) For All Categories Listed Below That Apply To This Vendor

| | | | | | |
|---|---|---|---|---|---|
| Dealer: | | Manufacturer: | | Factory Rep: | |
| Jobber: | | Retailer: | | Commodity: | |
| Individual: | | Partnership: | | Incorporated: | |
| Minority: | | Small Business: | | In-State: | |

Information on State Agency Submitting Vendor Form

State Agency* & SHS #

Contact Person Name & Title*

Telephone #*

**Send to:** Maine Department of Transportation/ Contracts 16 SHS, Augusta, ME 04333-0014 Attn: Pat Brown

May-04

# INSTRUCTIONS FOR COMPLETING VENDOR FORM

1. **Print Clearly**
2. **All sections marked with an * must be completed for processing**
3. **Send completed form to requesting State agency OR remit to address at bottom of form.**
4. **Do NOT send by Fax. Only originals will be accepted.**

| **FIELDS** | **INFORMATION NEEDED FOR FIELD** |
|---|---|
| *Special Instructions* | *Instructions to Vendor from Agency requesting information.* |
| *Return to* | *The location of agency where the form is to be mailed back to. If none use address at bottom of form.* |
| Boxes above SSN/EIN Fields | Please check mark all that apply to the vendor. If other, please specify.<br>If it's a new vendor only one will apply: "New Vendor" |
| Social Security Number | Individuals, individuals "doing business as", and individuals without a Federal Taxpayer ID #. Use if not using EIN |
| Federal Taxpayer ID Number* | Businesses or professionals providing services.<br>(ID # needs to be use for REMITTANCE purposes.) Use if not using SSN |
| New | Current Information |
| Old | Old information (If another ID# had been used please put it next to "OLD") |
| Name | Individual's Name or Business Name. ONLY ONE name per a form. |
| DBA or C/O | "Doing business as" or "In Care Of" |
| Address | REMITTANCE ADDRESS - Street Address OR PO Box (one or the other) |
| Tel # | Phone Number of individual or business |
| Signature | Individual or authorized representative of individual or authorized representative of the business |
| Date | Current Date (no more than 3 months old) |
| Contact Name | Contact person at business |
| Accounts Receivable Contact Name | Contact person at business for accounts receivables. |
| Phone # | Phone for Act Rec Contact |
| Vendor Indicators | Indicate all that apply for the vendor, as needed |
| Agency Info | For Agency personnel submitting the form. Contact info incase of questions. |

# STATE OF MAINE DEPARTMENT OF TRANSPORTATION
# NOTICE TO CONTRACTORS

Sealed Bids addressed to the Maine Department of Transportation, Augusta, Maine 04333 and endorsed on the wrapper "Bid for **Hot Mix Asphalt Overlay, Pavement Milling, Drainage and Safety Improvements** in the towns of **Brunswick and Freeport**" will be received from contractors at the Reception Desk, Maine DOT Building, Child Street, Augusta, Maine, until 11:00 o'clock A.M. (prevailing time) on **July 19, 2006,** and at that time and place publicly opened and read. Bids will be accepted from contractors prequalified by the Department of Transportation for highway construction and paving projects. All other Bids may be rejected. **MDOT provides the option of electronic bidding. We accept electronic bids for those bid packages posted on the bidx.com website. Electronic bids do not have to be accompanied by paper bids. Please note: the Department will accept a facsimile of the bid bond; however, the original bid bond must then be received at the MDOT Contract Section within 72 hours of the bid opening. Until further notice, dual bids (one paper, one electronic) will be accepted, with the paper copy taking precedence.**

Description: Maine Federal Aid Project Nos., STP-1284(100)X, PIN 12841.00; NH-1290(800)E, PIN 12908.00; STP-1309(400)X, PIN 13094.00; and STP-1309(500)X, PIN 13095.00

Location: In Cumberland County, Project No. STP-1284(100)X is located on Pleasant Street, beginning at Route 1 and extending easterly 0.50 mi. to 0.14 mi east of Union Street. Project No. NH-1290(800)E is located on US Route 1, beginning at Pleasant Street and extending northerly 0.50 mi. to Route 24. Project No. STP-1309(400)X is located on Mallett Drive (Route 125), beginning at Route 1 and extending northwesterly 0.58 mile. Project No. STP-1309(500)X is located on Route 1, beginning at West Street and extending northerly 0.52 mile to Mallett Drive (Route 125).

Outline of Work: Hot Mix Asphalt Overlay, Pavement Milling, Drainage and Safety Improvements and other incidental work.

For general information regarding Bidding and Contracting procedures, contact Scott Bickford at (207)624-3410. Our webpage at http://www.state.me.us/mdot/project/design/homepg.htm contains a copy of the schedule of items, Plan Holders List, written portions of bid amendments (not drawings), and bid results. For Project-specific information fax all questions to **James Andrews** at (207)624-3431. Questions received after 12:00 noon of Monday prior to bid date will not be answered. Bidders shall not contact any other Departmental staff for clarification of Contract provisions, and the Department will not be responsible for any interpretations so obtained. Hearing impaired persons may call the Telecommunication Device for the Deaf at (207) 624-3007.

Plans, specifications and bid forms may be seen at the Maine DOT Building in Augusta, Maine. They may be purchased from the Department between the hours of 8:00 a.m. to 4:30 p.m. by cash, credit card (Visa/Mastercard) or check payable to Treasurer, State of Maine sent to Maine Department of Transportation, Attn.: Mailroom, 16 State House Station, Augusta, Maine 04333-0016. They also may be purchased by telephone at (207)624-3536 between the hours of 8:00 a.m. to 4:30 p.m., Bid Book $10 ($13 by mail), payment in advance, all non-refundable.

Each Bid must be made upon blank forms provided by the Department and must be accompanied by a bid bond at 5% of the bid amount or an official bank check, cashier's check, certified check, certificate of deposit, or United States postal money order in the amount of $20,000 payable to Treasurer, State of Maine as a Bid guarantee. A Contract Performance Surety Bond and a Contract Payment Surety Bond, each in the amount of 100 percent of the Contract price, will be required of the successful Bidder.

This Contract is subject to all applicable Federal Laws. This contract is subject to compliance with the Disadvantaged Business Enterprise program requirements as set forth by the Maine Department of Transportation.

All work shall be governed by "State of Maine, Department of Transportation, Standard Specifications, Revision of December 2002", price $10 [$13 by mail], and Standard Details, Revision of December 2002, price $20 [$25 by mail] Standard Detail updates can be found at http://www.state.me.us/mdot/project/design/homepg.htm

The right is hereby reserved to the MDOT to reject any or all Bids.

Augusta, Maine
June 28, 2006

MDOT [illegible] Bids.

JOHN E. DORITY
CHIEF ENGINEER

Brunswick & Freeport
PINS; 12841,12908.00,13094.00, & 13095.00
August 3, 2004
Supercedes March 17, 2004

**SPECIAL PROVISION 102.7.3**
**ACKNOWLEDGMENT OF BID AMENDMENTS**

With this form, the Bidder acknowledges its responsibility to check for all Amendments to the Bid Package. For each Project under Advertisement, Amendments are located at http://www.maine.gov/mdot/comprehensive-list-projects/project-information.php It is the responsibility of the Bidder to determine if there are Amendments to the Project, to download them, to incorporate them into their Bid Package, and to reference the Amendment number and the date on the form below. The Maine DOT will not post Bid Amendments any later than noon the day before Bid opening without individually notifying all the planholders.

| Amendment Number | Date |
|---|---|
| | |
| | |
| | |
| | |
| | |
| | |
| | |
| | |
| | |
| | |

The Contractor, for itself, its successors and assigns, hereby acknowledges that it has received all of the above referenced Amendments to the Bid Package.

CONTRACTOR

_____
Date

_____
Signature of authorized representative

_____
(Name and Title Printed)

CONTRACT ID: 012908.00 PROJECT(S): STP-1284(100)X
NH-1290(800)E
STP-1309(400)X
OTHERS

CONTRACTOR :_____

| LINE NO | ITEM DESCRIPTION | APPROX. QUANTITY AND UNITS | UNIT PRICE DOLLARS | UNIT PRICE CTS | BID AMOUNT DOLLARS | BID AMOUNT CTS |
|---|---|---|---|---|---|---|
| | SECTION 0001 PROJECT ITEMS | | | | | |
| 0010 | 202.202 REMOVING PAVEMENT SURFACE | 24570.000 SY | | | | |
| 0020 | 202.2021 REMOVING PAVEMENT SURFACE - SIDEWALK | 30.000 SY | | | | |
| 0030 | 202.203 PAVEMENT BUTT JOINTS | 2130.000 SY | | | | |
| 0040 | 204.41 REHABILITATION OF EXISTING SHOULDERS, PLAN QUANTITY | 220.000 SY | | | | |
| 0050 | 211.20 INSLOPE EXCAVATION | 600.000 LF | | | | |
| 0060 | 211.30 DITCH EXCAVATION | 920.000 LF | | | | |
| 0070 | 304.10 AGGREGATE SUBBASE COURSE - GRAVEL | 10.000 CY | | | | |
| 0080 | 403.209 HOT MIX ASPHALT 9.5 MM HMA (SIDEWALKS, DRIVES, INCIDENTALS) | 290.000 T | | | | |
| 0090 | 403.210 HOT MIX ASPHALT 9.5 MM HMA | 1810.000 T | | | | |

CONTRACT ID: 012908.00 PROJECT(S): STP-1284(100)X
NH-1290(800)E
STP-1309(400)X
OTHERS

CONTRACTOR :_____

| LINE NO | ITEM DESCRIPTION | APPROX. QUANTITY AND UNITS | UNIT PRICE DOLLARS | UNIT PRICE CTS | BID AMOUNT DOLLARS | BID AMOUNT CTS |
|---|---|---|---|---|---|---|
| 0100 | 403.211 HOT MIX ASPHALT (SHIMMING) | 1720.000 T | | | | |
| 0110 | 409.15 BITUMINOUS TACK COAT APPLIED | 3050.000 G | | | | |
| 0120 | 411.10 UNTREATED AGGREGATE SURFACE COURSE (TRUCK MEASURE) | 20.000 CY | | | | |
| 0130 | 604.161 ALTERING CATCH BASIN | 34.000 EA | | | | |
| 0140 | 604.164 REBUILDING CATCH BASIN | 4.000 EA | | | | |
| 0150 | 604.18 ADJUSTING MANHOLE OR CATCH BASIN TO GRADE | 12.000 EA | | | | |
| 0160 | 606.1722 BRIDGE TRANSITION - TYPE 2 | 4.000 EA | | | | |
| 0170 | 606.178 GUARDRAIL BEAM | 263.000 LF | | | | |
| 0180 | 606.24 GUARDRAIL TYPE 3D - SINGLE RAIL | 1101.000 LF | | | | |
| 0190 | 606.242 GUARDRAIL TYPE 3D - OVER 15 FOOT RADIUS | 50.000 LF | | | | |

CONTRACT ID: 012908.00 PROJECT(S): STP-1284(100)X
NH-1290(800)E
STP-1309(400)X
OTHERS

CONTRACTOR :_____

| LINE NO | ITEM DESCRIPTION | APPROX. QUANTITY AND UNITS | UNIT PRICE DOLLARS | UNIT PRICE CTS | BID AMOUNT DOLLARS | BID AMOUNT CTS |
|---|---|---|---|---|---|---|
| 0200 | 606.353 REFLECTORIZED FLEXIBLE GUARDRAIL MARKER | 8.000 EA | | | | |
| 0210 | 606.3651 GUARDRAIL-REMOVE, MODIFY, AND RESET EXISTING TO 3D | 1614.000 LF | | | | |
| 0220 | 606.367 REPLACE UNUSABLE EXISTING GUARDRAIL POSTS | 6.000 EA | | | | |
| 0230 | 606.48 SINGLE GALVANIZED STEEL POST | 11.000 EA | | | | |
| 0240 | 606.79 GUARDRAIL 350 FLARED TERMINAL | 4.000 EA | | | | |
| 0250 | 608.26 CURB RAMP DETECTABLE WARNING FIELD | 70.000 SF | | | | |
| 0260 | 608.46 REGRADING SIDEWALK | 1610.000 SY | | | | |
| 0270 | 609.31 CURB TYPE 3 | 3312.000 LF | | | | |
| 0280 | 609.34 CURB TYPE 5 | 65.000 LF | | | | |
| 0290 | 609.35 CURB TYPE 5 - CIRCULAR | 25.000 LF | | | | |

CONTRACT ID: 012908.00 PROJECT(S): STP-1284(100)X
NH-1290(800)E
STP-1309(400)X
OTHERS

CONTRACTOR :_____

| LINE NO | ITEM DESCRIPTION | APPROX. QUANTITY AND UNITS | UNIT PRICE DOLLARS | UNIT PRICE CTS | BID AMOUNT DOLLARS | BID AMOUNT CTS |
|---|---|---|---|---|---|---|
| 0300 | 609.38 RESET CURB TYPE 1 | 363.000 LF | | | | |
| 0310 | 615.07 LOAM | 90.000 CY | | | | |
| 0320 | 618.1301 SEEDING METHOD NUMBER 1 - PLAN QUANTITY | 22.000 UN | | | | |
| 0330 | 618.1401 SEEDING METHOD NUMBER 2 - PLAN QUANTITY | 23.000 UN | | | | |
| 0340 | 619.1201 MULCH - PLAN QUANTITY | 45.000 UN | | | | |
| 0350 | 627.711 WHITE OR YELLOW PAINTED PAVEMENT MARKING LINE (PLAN QUANTITY) | 36050.000 LF | | | | |
| 0360 | 627.75 WHITE OR YELLOW PAVEMENT AND CURB MARKING | 4860.000 SF | | | | |
| 0370 | 627.76 TEMPORARY PVMT. MARK LINE, W OR YELLOW | LUMP | LUMP | | | |
| 0380 | 627.77 REMOVING PAVEMENT MARKINGS | 2450.000 SF | | | | |
| 0390 | 629.05 HAND LABOR, STRAIGHT TIME | 46.000 HR | | | | |

CONTRACT ID: 012908.00 PROJECT(S): STP-1284(100)X
NH-1290(800)E
STP-1309(400)X
OTHERS

CONTRACTOR :_____

| LINE NO | ITEM DESCRIPTION | APPROX. QUANTITY AND UNITS | UNIT PRICE DOLLARS | UNIT PRICE CTS | BID AMOUNT DOLLARS | BID AMOUNT CTS |
|---|---|---|---|---|---|---|
| 0400 | 631.12 ALL PURPOSE EXCAVATOR (INCLUDING OPERATOR) | 28.000 HR | | | | |
| 0410 | 631.133 SKID STEER (INCLUDING OPERATOR) | 23.000 HR | | | | |
| 0420 | 631.172 TRUCK - LARGE (INCLUDING OPERATOR) | 41.000 HR | | | | |
| 0430 | 631.18 CHAIN SAW RENTAL (INCLUDING OPERATOR) | 2.000 HR | | | | |
| 0440 | 639.19 FIELD OFFICE TYPE B | 1.000 EA | | | | |
| 0450 | 645.271 REGULATORY, WARNING, CONFIRMATION AND ROUTE MARKER ASSEMBLY SIGNS, TYPE I | 40.000 SF | | | | |
| 0460 | 652.39 WORK ZONE TRAFFIC CONTROL | LUMP | LUMP | | | |
| 0470 | 652.41 PORTABLE - CHANGEABLE MESSAGE SIGN | 8.000 EA | | | | |
| 0480 | 656.75 TEMPORARY SOIL EROSION AND WATER POLLUTION CONTROL | LUMP | LUMP | | | |
| 0490 | 659.10 MOBILIZATION | LUMP | LUMP | | | |
| | SECTION 0001 TOTAL | | | | | |

CONTRACT ID: 012908.00 PROJECT(S): STP-1284(100)X
NH-1290(800)E
STP-1309(400)X
OTHERS

CONTRACTOR :_____

| LINE NO | ITEM DESCRIPTION | APPROX. QUANTITY AND UNITS | UNIT PRICE DOLLARS | UNIT PRICE CTS | BID AMOUNT DOLLARS | BID AMOUNT CTS |
|---|---|---|---|---|---|---|
| | TOTAL BID | | | | | |

# CONTRACT AGREEMENT, OFFER & AWARD

AGREEMENT made on the date last signed below, by and between the State of Maine, acting through and by its Department of Transportation (Department), an agency of state government with its principal administrative offices located at Child Street, Augusta, Maine, with a mailing address at 16 State House Station, Augusta, Maine 04333-0016, and _____ a corporation or other legal entity organized under the laws of the State of _____, with its principal place of business located at _____ _____

The Department and the Contractor, in consideration of the mutual promises set forth in this Agreement (the "Contract"), hereby agree as follows:

**A. The Work.**

The Contractor agrees to complete all Work as specified or indicated in the Contract including Extra Work in conformity with the Contract, **STP-1284(100)X, PIN 12841.00; NH-1290(800)E, PIN 12908.00; STP-1309(400)X; PIN 13094.00; and STP-13090(500)X, PIN 13095.00 for the Hot Mix Asphalt Overlay, Pavement Milling, Drainage and Safety Improvements in the towns of Brunswick and Freeport, County of Cumberland, Maine**. The Work includes construction, maintenance during construction, warranty as provided in the Contract, and other incidental work.

The Contractor shall be responsible for furnishing all supervision, labor, equipment, tools supplies, permanent materials and temporary materials required to perform the Work including construction quality control including inspection, testing and documentation, all required documentation at the conclusion of the project, warranting its work and performing all other work indicated in the Contract.

The Department shall have the right to alter the nature and extent of the Work as provided in the Contract; payment to be made as provided in the same.

**B. Time.**

The Contractor agrees to complete all Work, except warranty work, on or before **October 14, 2006.** Further, the Department may deduct from moneys otherwise due the Contractor, not as a penalty, but as Liquidated Damages in accordance with Sections 107.7 and 107.8 of the State of Maine Department of Transportation Standard Specifications, Revision of December 2002.

**C. Price.**

The quantities given in the Schedule of Items of the Bid Package will be used as the basis for determining the original Contract amount and for determining the amounts of the required Performance Surety Bond and Payment Surety Bond, and that the amount of this offer is _____

_____

**$**_ _____ Performance Bond and Payment Bond each being 100% of the amount of this Contract.

**D. Contract.**

This Contract, which may be amended, modified, or supplemented in writing only, consists of the Contract documents as defined in the Plans, Standard Specifications, Revision of December 2002, Standard Details Revision of December 2002 as updated through advertisement, Supplemental Specifications, Special Provisions, Contract Agreement; and Contract Bonds. It is agreed and understood that this Contract will be governed by the documents listed above.

**E. Certifications.**

By signing below, the Contractor hereby certifies that to the best of the Contractor's knowledge and belief:

1. All of the statements, representations, covenants, and/or certifications required or set forth in the Bid and the Bid Documents, including those in Appendix A to Division 100 of the Standard Specifications Revision of December 2002 (Federal Contract Provisions Supplement), and the Contract are still complete and accurate as of the date of this Agreement.

2. The Contractor knows of no legal, contractual, or financial impediment to entering into this Contract.

3. The person signing below is legally authorized by the Contractor to sign this Contract on behalf of the Contractor and to legally bind the Contractor to the terms of the Contract.

**F. Offer.**

The undersigned, having carefully examined the site of work, the Plans, Standard Specifications Revision of December 2002, Standard Details Revision of December 2002 as updated through advertisement, Supplemental Specifications, Special Provisions, Contract Agreement; and Contract Bonds contained herein for construction of: **STP-1284(100)X, PIN 12841.00; NH-1290(800)E, PIN 12908.00; STP-1309(400)X; PIN 13094.00; and STP-13090(500)X, PIN 13095.00 for the Hot Mix Asphalt Overlay, Pavement Milling, Drainage and Safety Improvements in the towns of Brunswick and Freeport, County of Cumberland, State of Maine**, on which bids will be received until the time specified in the "Notice to Contractors" do(es) hereby bid and offer to enter into this contract to supply all the materials, tools, equipment and labor to construct the whole of the Work in strict accordance with the terms and conditions of this Contract at the unit prices in the attached "Schedule of Items".

The Offeror agrees to perform the work required at the price specified above and in accordance with the bids provided in the attached "Schedule of Items" in strict accordance with the terms of this solicitation, and to provide the appropriate insurance and bonds if this offer is accepted by the Government in writing.

As Offeror also agrees:

First: To do any extra work, not covered by the attached "Schedule of Items", which may be ordered by the Resident, and to accept as full compensation the amount determined upon a "Force Account" basis as provided in the Standard Specifications, Revision of December 2002, and as addressed in the contract documents.

Second: That the bid bond at 5% of the bid amount or the official bank check, cashier's check, certificate of deposit or U. S. Postal Money Order in the amount given in the "Notice to Contractors", payable to the Treasurer of the State of Maine and accompanying this bid, shall be forfeited, as liquidated damages, if in case this bid is accepted, and the undersigned shall fail to abide by the terms and conditions of the offer and fail to furnish satisfactory insurance and Contract bonds under the conditions stipulated in the Specifications within 15 days of notice of intent to award the contract.

Third: To begin the Work as stated in Section 107.2 of the Standard Specifications Revision of December 2002 and complete the Work within the time limits given in the Special Provisions of this Contract.

Fourth: The Contractor will be bound to the Disadvantaged Business Enterprise (DBE) Requirements contained in the attached Notice (Additional Instructions to Bidders) and submit a completed Contractor's Disadvantaged Business Enterprise Utilization Plan by 4:30pm on the day of bid opening to the Contracts Engineer.

Fifth: That this offer shall remain open for 30 calendar days after the date of opening of bids.

Sixth: The Bidder hereby certifies, to the best of its knowledge and belief that: the Bidder has not, either directly or indirectly, entered into any agreement, participated in any collusion, or otherwise taken any action in restraint of competitive bidding in connection with its bid, and its subsequent contract with the Department.

IN WITNESS WHEREOF, the Contractor, for itself, its successors and assigns, hereby execute two duplicate originals of this Agreement and thereby binds itself to all covenants, terms, and obligations contained in the Contract Documents.

CONTRACTOR

| | |
|---|---|
| _____ | _____ |
| Date | (Signature of Legally Authorized Representative of the Contractor) |
| _____ | _____ |
| Witness | (Name and Title Printed) |

**G. Award.**

Your offer is hereby accepted. This award consummates the Contract, and the documents referenced herein.

MAINE DEPARTMENT OF TRANSPORTATION

| | |
|---|---|
| _____ | _____ |
| Date | By: David A. Cole, Commissioner |
| _____ | |
| Witness | |

# CONTRACT AGREEMENT, OFFER & AWARD

AGREEMENT made on the date last signed below, by and between the State of Maine, acting through and by its Department of Transportation (Department), an agency of state government with its principal administrative offices located at Child Street, Augusta, Maine, with a mailing address at 16 State House Station, Augusta, Maine 04333-0016, and _____ a corporation or other legal entity organized under the laws of the State of _____, with its principal place of business located at _____ _____

The Department and the Contractor, in consideration of the mutual promises set forth in this Agreement (the "Contract"), hereby agree as follows:

**A. The Work.**

The Contractor agrees to complete all Work as specified or indicated in the Contract including Extra Work in conformity with the Contract, **STP-1284(100)X, PIN 12841.00; NH-1290(800)E, PIN 12908.00; STP-1309(400)X; PIN 13094.00; and STP-13090(500)X, PIN 13095.00 for the Hot Mix Asphalt Overlay, Pavement Milling, Drainage and Safety Improvements in the towns of Brunswick and Freeport, County of Cumberland, Maine**. The Work includes construction, maintenance during construction, warranty as provided in the Contract, and other incidental work.

The Contractor shall be responsible for furnishing all supervision, labor, equipment, tools supplies, permanent materials and temporary materials required to perform the Work including construction quality control including inspection, testing and documentation, all required documentation at the conclusion of the project, warranting its work and performing all other work indicated in the Contract.

The Department shall have the right to alter the nature and extent of the Work as provided in the Contract; payment to be made as provided in the same.

**B. Time.**

The Contractor agrees to complete all Work, except warranty work, on or before **October 14, 2006.** Further, the Department may deduct from moneys otherwise due the Contractor, not as a penalty, but as Liquidated Damages in accordance with Sections 107.7 and 107.8 of the State of Maine Department of Transportation Standard Specifications, Revision of December 2002.

**C. Price.**

The quantities given in the Schedule of Items of the Bid Package will be used as the basis for determining the original Contract amount and for determining the amounts of the required Performance Surety Bond and Payment Surety Bond, and that the amount of this offer is _____

_____

**$**_ _____ Performance Bond and Payment Bond each being 100% of the amount of this Contract.

**D. Contract.**

This Contract, which may be amended, modified, or supplemented in writing only, consists of the Contract documents as defined in the Plans, Standard Specifications, Revision of December 2002, Standard Details Revision of December 2002 as updated through advertisement, Supplemental Specifications, Special Provisions, Contract Agreement; and Contract Bonds. It is agreed and understood that this Contract will be governed by the documents listed above.

**E. Certifications.**

By signing below, the Contractor hereby certifies that to the best of the Contractor's knowledge and belief:

1. All of the statements, representations, covenants, and/or certifications required or set forth in the Bid and the Bid Documents, including those in Appendix A to Division 100 of the Standard Specifications Revision of December 2002 (Federal Contract Provisions Supplement), and the Contract are still complete and accurate as of the date of this Agreement.

2. The Contractor knows of no legal, contractual, or financial impediment to entering into this Contract.

3. The person signing below is legally authorized by the Contractor to sign this Contract on behalf of the Contractor and to legally bind the Contractor to the terms of the Contract.

**F. Offer.**

The undersigned, having carefully examined the site of work, the Plans, Standard Specifications Revision of December 2002, Standard Details Revision of December 2002 as updated through advertisement, Supplemental Specifications, Special Provisions, Contract Agreement; and Contract Bonds contained herein for construction of: **STP-1284(100)X, PIN 12841.00; NH-1290(800)E, PIN 12908.00; STP-1309(400)X; PIN 13094.00; and STP-13090(500)X, PIN 13095.00 for the Hot Mix Asphalt Overlay, Pavement Milling, Drainage and Safety Improvements in the towns of Brunswick and Freeport, County of Cumberland, State of Maine**, on which bids will be received until the time specified in the "Notice to Contractors" do(es) hereby bid and offer to enter into this contract to supply all the materials, tools, equipment and labor to construct the whole of the Work in strict accordance with the terms and conditions of this Contract at the unit prices in the attached "Schedule of Items".

The Offeror agrees to perform the work required at the price specified above and in accordance with the bids provided in the attached "Schedule of Items" in strict accordance with the terms of this solicitation, and to provide the appropriate insurance and bonds if this offer is accepted by the Government in writing.

As Offeror also agrees:

First: To do any extra work, not covered by the attached "Schedule of Items", which may be ordered by the Resident, and to accept as full compensation the amount determined upon a "Force Account" basis as provided in the Standard Specifications, Revision of December 2002, and as addressed in the contract documents.

Second: That the bid bond at 5% of the bid amount or the official bank check, cashier's check, certificate of deposit or U. S. Postal Money Order in the amount given in the "Notice to Contractors", payable to the Treasurer of the State of Maine and accompanying this bid, shall be forfeited, as liquidated damages, if in case this bid is accepted, and the undersigned shall fail to abide by the terms and conditions of the offer and fail to furnish satisfactory insurance and Contract bonds under the conditions stipulated in the Specifications within 15 days of notice of intent to award the contract.

Third: To begin the Work as stated in Section 107.2 of the Standard Specifications Revision of December 2002 and complete the Work within the time limits given in the Special Provisions of this Contract.

Fourth: The Contractor will be bound to the Disadvantaged Business Enterprise (DBE) Requirements contained in the attached Notice (Additional Instructions to Bidders) and submit a completed Contractor's Disadvantaged Business Enterprise Utilization Plan by 4:30pm on the day of bid opening to the Contracts Engineer.

Fifth: That this offer shall remain open for 30 calendar days after the date of opening of bids.

Sixth: The Bidder hereby certifies, to the best of its knowledge and belief that: the Bidder has not, either directly or indirectly, entered into any agreement, participated in any collusion, or otherwise taken any action in restraint of competitive bidding in connection with its bid, and its subsequent contract with the Department.

IN WITNESS WHEREOF, the Contractor, for itself, its successors and assigns, hereby execute two duplicate originals of this Agreement and thereby binds itself to all covenants, terms, and obligations contained in the Contract Documents.

CONTRACTOR

| | |
|---|---|
| _____ | _____ |
| Date | (Signature of Legally Authorized Representative of the Contractor) |
| _____ | _____ |
| Witness | (Name and Title Printed) |

**G. Award.**

Your offer is hereby accepted. This award consummates the Contract, and the documents referenced herein.

MAINE DEPARTMENT OF TRANSPORTATION

| | |
|---|---|
| _____ | _____ |
| Date | By: David A. Cole, Commissioner |
| _____ | |
| Witness | |

# CONTRACT AGREEMENT, OFFER & AWARD

AGREEMENT made on the date last signed below, by and between the State of Maine, acting through and by its Department of Transportation (Department), an agency of state government with its principal administrative offices located at 1705 U.S. Route 202, Winthrop, Maine, with a mailing address at 16 State House Station, Augusta, Maine 04333-0016, and **(Name of the firm bidding the job)** a corporation or other legal entity organized under the laws of the State of Maine, with its principal place of business located at **(address of the firm bidding the job)**

The Department and the Contractor, in consideration of the mutual promises set forth in this Agreement (the "Contract"), hereby agree as follows:

SAMPLE

**A. The Work.**

The Contractor agrees to complete all Work as specified or indicated in the Contract including Extra Work in conformity with the Contract, PIN No. **1224.00**, for the **Hot Mix Asphalt Overlay** in the town/city of **West Eastport**, County of **Washington**, Maine. The Work includes construction, maintenance during construction, warranty as provided in the Contract, and other incidental work.

The Contractor shall be responsible for furnishing all supervision, labor, equipment, tools supplies, permanent materials and temporary materials required to perform the Work including construction quality control including inspection, testing and documentation, all required documentation at the conclusion of the project, warranting its work and performing all other work indicated in the Contract.

The Department shall have the right to alter the nature and extent of the Work as provided in the Contract; payment to be made as provided in the same.

**B. Time.**

The Contractor agrees to complete all Work, except warranty work, on or before **November 15**, 2003**.** Further, the Department may deduct from moneys otherwise due the Contractor, not as a penalty, but as Liquidated Damages in accordance with Sections 107.7 and 107.8 of the State of Maine Department of Transportation Standard Specifications, Revision of December 2002.

**C. Price.**

The quantities given in the Schedule of Items of the Bid Package will be used as the basis for determining the original Contract amount and for determining the amounts of the required Performance Surety Bond and Payment Surety Bond, and that the amount of this offer is **____(Place bid here in alphabetical form such as One Hundred and Two dollars and 10 cents)**
**$_ (repeat bid here in numerical terms, such as $102.10)**_____ Performance Bond and Payment Bond each being 100% of the amount of this Contract.

**D. Contract.**

This Contract, which may be amended, modified, or supplemented in writing only, consists of the Contract documents as defined in the Plans, Standard Specifications, Revision of December 2002, Standard Details Revision of December 2002, Supplemental Specifications, Special Provisions, Contract Agreement; and Contract Bonds. It is agreed and understood that this Contract will be governed by the documents listed above.

**E. Certifications.**

By signing below, the Contractor hereby certifies that to the best of the Contractor's knowledge and belief:

1. All of the statements, representations, covenants, and/or certifications required or set forth in the Bid and the Bid Documents, including those in Appendix A to Division 100 of the Standard Specifications Revision of December 2002 (Federal Contract Provisions Supplement), and the Contract are still complete and accurate as of the date of this Agreement.

2. The Contractor knows of no legal, contractual, or financial impediment to entering into this Contract.

3. The person signing below is legally authorized by the Contractor to sign this Contract on behalf of the Contractor and to legally bind the Contractor to the terms of the Contract.

**F. Offer.**

SAMPLE

The undersigned, having carefully examined the site of work, the Plans, Standard Specifications, Revision of December 2002, Standard Details Revision of December 2002, Supplemental Specifications, Special Provisions, Contract Agreement; and Contract Bonds contained herein for construction of:

**_____PIN 1234.00 West Eastport, Hot Mix Asphalt Overlay_____,**
State of Maine, on which bids will be received until the time specified in the "Notice to Contractors" do(es) hereby bid and offer to enter into this contract to supply all the materials, tools, equipment and labor to construct the whole of the Work in strict accordance with the terms and conditions of this Contract at the unit prices in the attached "Schedule of Items".

The Offeror agrees to perform the work required at the price specified above and in accordance with the bids provided in the attached "Schedule of Items" in strict accordance with the terms of this solicitation, and to provide the appropriate insurance and bonds if this offer is accepted by the Government in writing.

SAMPLE

As Offeror also agrees:

First: To do any extra work, not covered by the attached "Schedule of Items", which may be ordered by the Resident, and to accept as full compensation the amount determined upon a "Force Account" basis as provided in the Standard Specifications, Revision of December 2002, and as addressed in the contract documents.

Second: That the bid bond at 5% of the bid amount or the official bank check, cashier's check, certificate of deposit or U. S. Postal Money Order in the amount given in the "Notice to Contractors", payable to the Treasurer of the State of Maine and accompanying this bid, shall be forfeited, as liquidated damages, if in case this bid is accepted, and the undersigned shall fail to abide by the terms and conditions of the offer and fail to furnish satisfactory insurance and Contract bonds under the conditions stipulated in the Specifications within 15 days of notice of intent to award the contract.

Third: To begin the Work on the date specified in the Engineer's "Notice to Commence Work" as stated in Section 107.2 of the Standard Specifications Revision of 2002 and complete the Work within the time limits given in the Special Provisions of this Contract.

Fourth: The Contractor will be bound to the Disadvantaged Business Enterprise (DBE) Requirements contained in the attached Notice (Additional Instructions to Bidders) and submit a completed Contractor's Disadvantaged Business Enterprise Utilization Plan by 4:30pm on the day of bid opening to the Contracts Engineer.

Fifth: That this offer shall remain open for 30 calendar days after the date of opening of bids.

Sixth: The Bidder hereby certifies, to the best of its knowledge and belief that: the Bidder has not, either directly or indirectly, entered into any agreement, participated in any collusion, or otherwise taken any action in restraint of competitive bidding in connection with its bid, and its subsequent contract with the Department.

IN WITNESS WHEREOF, the Contractor, for itself, its successors and assigns, hereby execute two duplicate originals of this Agreement and thereby binds itself to all covenants, terms, and obligations contained in the Contract Documents.

CONTRACTOR

| | |
|---|---|
| _____ | **(Sign Here)**_____ |
| Date | (Signature of Legally Authorized Representative of the Contractor) |
| ____(**Witness Sign Here)**_____ | **(Print Name Here)**_____ |
| Witness | (Name and Title Printed) |

SAMPLE

**G. Award.**

Your offer is hereby accepted. This award consummates the Contract, and the documents referenced herein.

MAINE DEPARTMENT OF TRANSPORTATION

| | |
|---|---|
| _____ | _____ |
| Date | By: David A. Cole, Commissioner |

_____
(Witness)

BOND # _____

CONTRACT PERFORMANCE BOND
(Surety Company Form)

KNOW ALL MEN BY THESE PRESENTS: That _____ _____ **and the State of** _____, as principal, and…….....,
a corporation duly organized under the laws of the State of ..... and having a usual place of business ..... .....,
as Surety, are held and firmly bound unto the Treasurer of the State of Maine in the sum of _____ **and 00/100 Dollars ($ )**, to be paid said Treasurer of the State of Maine or his successors in office, for which payment well and truly to be made, Principal and Surety bind themselves, their heirs, executors and administrators, successors and assigns, jointly and severally by these presents.

The condition of this obligation is such that if the Principal designated as Contractor in the Contract to construct Project Number _____ in the Municipality of _____ promptly and faithfully performs the Contract, then this obligation shall be null and void; otherwise it shall remain in full force and effect.

The Surety hereby waives notice of any alteration or extension of time made by the State of Maine.

Signed and sealed this ..... day of ....., 20….. .

| WITNESSES: | SIGNATURES: |
|---|---|
| | CONTRACTOR: |
| Signature..... | .....…..... |
| Print Name Legibly ..... | Print Name Legibly ...……..... |
| | SURETY: |
| Signature ..... | .....……..... |
| Print Name Legibly ..... | Print Name Legibly ..... |
| SURETY ADDRESS: | NAME OF LOCAL AGENCY: |
| ..... | ADDRESS ..... |
| ..... | ...……..... |
| ..... | .....……..... |
| TELEPHONE..... | .....……..... |

SAMPLE

BOND # _____

CONTRACT PAYMENT BOND
(Surety Company Form)

KNOW ALL MEN BY THESE PRESENTS: That _____ _____ **and the State of** _____, as principal, and.....….....
a corporation duly organized under the laws of the State of ..... and having a usual place of business in .....……., as Surety, are held and firmly bound unto the Treasurer of the State of Maine for the use and benefit of claimants as herein below defined, in the sum of _____ **and 00/100 Dollars ($ )** for the payment whereof Principal and Surety bind themselves, their heirs, executors and administrators, successors and assigns, jointly and severally by these presents.

The condition of this obligation is such that if the Principal designated as Contractor in the Contract to construct Project Number _____ in the Municipality of _____ promptly satisfies all claims and demands incurred for all labor and material, used or required by him in connection with the work contemplated by said Contract, and fully reimburses the obligee for all outlay and expense which the obligee may incur in making good any default of said Principal, then this obligation shall be null and void; otherwise it shall remain in full force and effect.

A claimant is defined as one having a direct contract with the Principal or with a Subcontractor of the Principal for labor, material or both, used or reasonably required for use in the performance of the contract.

Signed and sealed this ..... day of ...……....., 20 ... .

| | |
|---|---|
| WITNESS: | SIGNATURES: |
| | CONTRACTOR: |
| Signature……..... | .....…..... |
| Print Name Legibly .....……. | Print Name Legibly …..... |
| | SURETY: |
| Signature..... | ...…..... |
| Print Name Legibly ..... | Print Name Legibly …..... |
| SURETY ADDRESS: | NAME OF LOCAL AGENCY: |
| ...…..... | ADDRESS …..... |
| ..... | …….....…..... |
| TELEPHONE ..... | …….....…..... |

SAMPLE

January 26, 1999

# SPECIAL PROVISION
# PARTNERING

The successful bidder will have the opportunity to enter into a cooperative partnership agreement with the State Department of Transportation for the contract. The objective of this agreement is the effective completion of the work on time and to the standard of quality that will be a source of pride to both the State and the Contractor. The partnering agreement will not affect the terms of the contract. It is intended only to establish an environment of cooperation between the parties. If the partnering agreement is accepted.

1. Contractor shall select and provide a third-party facilitator to conduct the team building workshop for the Contractor and Department personnel. Facilitator selection shall require Department concurrence. The cost for the facilitator and his associated expenses will be shared equally by the Department on the next monthly estimate, following receipt of invoice(s) from the Contractor, on an extra work basis.

2. Contractor and Department will exchange lists of the key personnel to be participants in the workshop. The list will contain the name and job title of each person, a contact phone number, and the address for job related correspondence.

3. The Contractor shall select the location and make all arrangements for space as required by facilitator, and for any meals required. This cost to be shared equally.

4. A working arrangement for the partnership will be agreed upon in writing at the workshop. The arrangement will set out the mutually recognized goals and expectation of the parties.

5. The Contractor and the Department agree to make an effort to maintain identified key personnel assigned to the work for its duration. A timely notice by each shall be given if changes by either must be made.

6. Project issues shall be processed in the manner agreed upon by the parties during the orientation.

7. Follow-up workshops may be held periodically throughout the duration of the contract as agreed by the Contractor and the Department.

8. The Partnering Agreement is not intended to be a legal document. Failure by either party to follow the process identified will not be grounds for any claim under the contract.

9. ARE YOU INTERESTED IN THIS OPPORTUNITY? YES _____ NO _____

# STATE OF MAINE
# DEPARTMENT OF TRANSPORTATION

## STP-1284(100)X

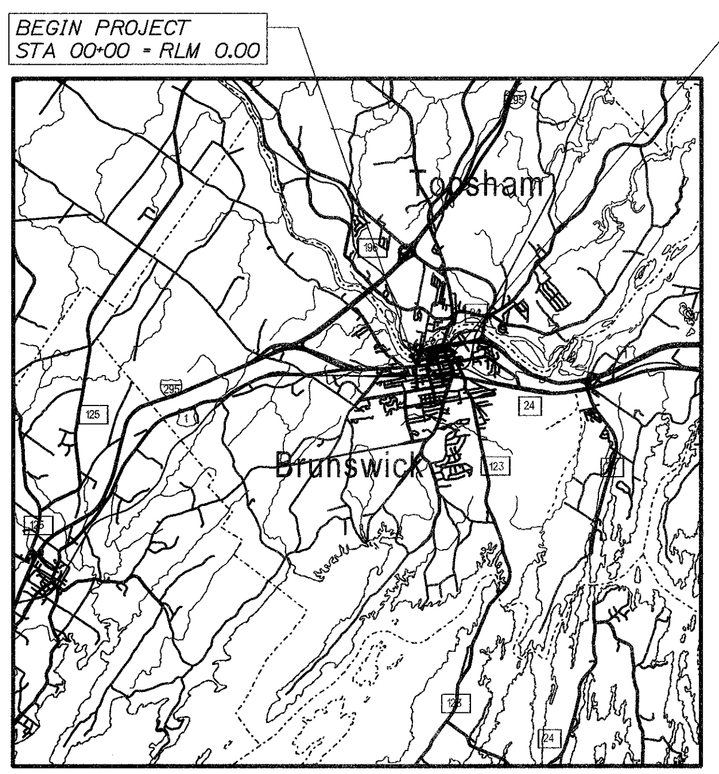


LOCATION MAP

2 0 2 4

Scale in Miles

# BRUNSWICK

## CUMBERLAND COUNTY

PLEASANT STREET

## STP-1284(100)X

PROJECT LENGTH : 0.50mi.

## LEVEL 2

HOT MIX ASPHALT OVERLAY,
PAVEMENT MILLING, AND SAFETY IMPROVEMENTS

### TRAFFIC DATA

| | |
|---|---|
| Current (2006) AADT | 10400 |
| Future (2018) AADT | 11650 |
| DHV - % of AADT | 10% |
| Design Hour Volume | 1248 |
| % Heavy Trucks (AADT) | 6% |
| % Heavy Trucks (DHV) | 4% |
| Directional Distribution (DHV) | 55% |
| 18 kip Equivalent P 2.0 | 288 |
| 18 kip Equivalent P 2.5 | 283 |
| Design Speed (mph) | 25 |

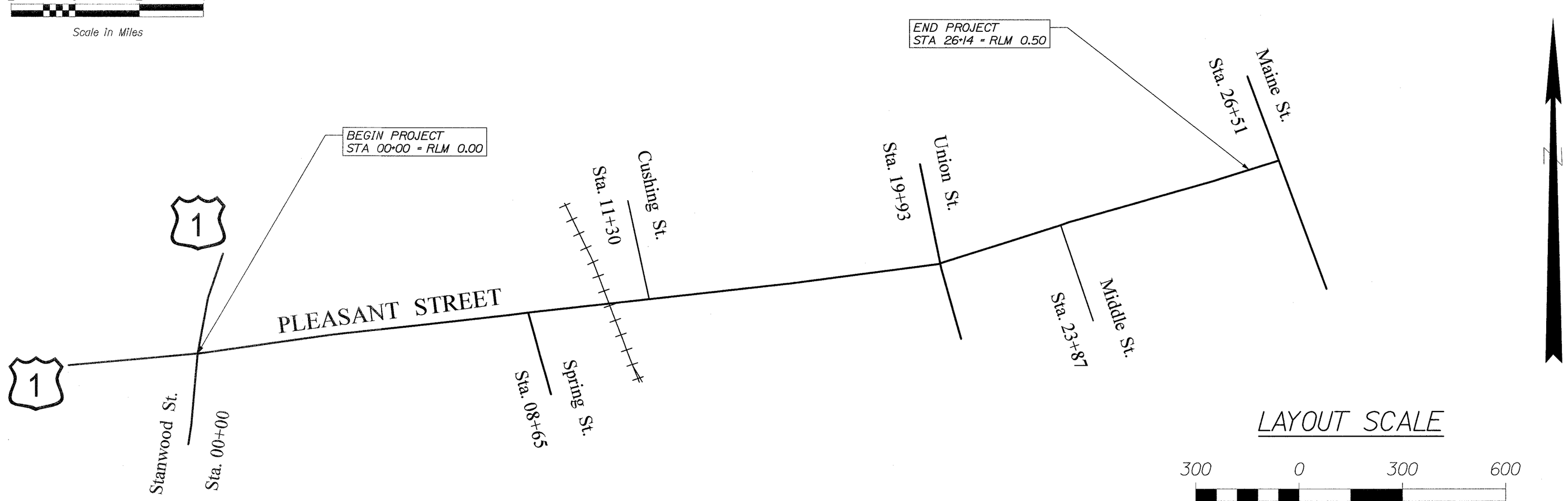


LAYOUT SCALE

300 0 300 600

Scale in Feet

STATE OF MAINE
DEPARTMENT OF TRANSPORTATION

APPROVED

| | DATE |
|---|---|
| COMMISSIONER: | 6/14/06 |
| CHIEF ENGINEER: | 06/14/06 |

STATE OF MAINE
DEAN A. LESSARD
#8225
REGISTERED PROFESSIONAL ENGINEER

| | |
|---|---|
| SIGNATURE | |
| P.E. NUMBER | 8225 |
| DATE | 6/12/06 |

PROJECT INFORMATION

| | |
|---|---|
| PROGRAM | |
| PROJECT MANAGER | REGIONAL HIGHWAY PROG. |
| DESIGNER | DEAN LESSARD |
| CONSULTANT | GILE COURTEMANCHE |
| PROJECT RESIDENT | ANTHONY FONTAINE |
| CONTRACTOR | |
| PROJECT COMPLETION DATE | |

PIN 12841.00

STP-1284(100)X

BRUNSWICK
PLEASANT STREET

TITLE SHEET

SHEET NUMBER

1

OF 1

Filename: ...\00\HIGHWAY\MSTA\001_Title.dgn Division: HIGHWAY Username: randy.jillian Date:6/9/2006

# 3/4 " Hot Mix Asphalt Overlay
## Mill and Fill

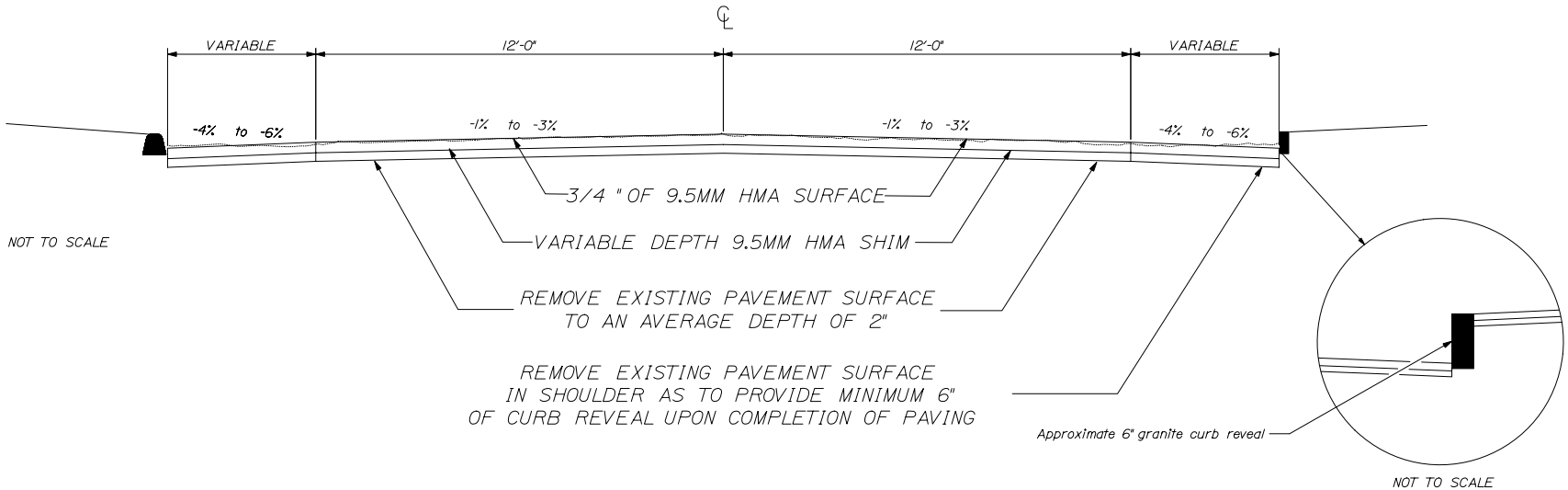


STATE OF MAINE
DEPARTMENT OF TRANSPORTATION

STP-1284(100)X

PIN 12841.00 HIGHWAY PLANS

| | | | |
|---|---|---|---|
| PROJ. MANAGER | DEAN LESSARD | BY | DATE |
| DESIGN-DETAILED | | G. COURTEMANCHE | |
| CHECKED-DETAILED | | | |
| DESIGN2-DETAILED | | | SIGNATURE |
| DESIGN3-DETAILED3 | | | |
| REVISIONS 1 | | | P.E. NUMBER |
| REVISIONS 2 | | | |
| REVISIONS 3 | | | DATE |
| REVISIONS 4 | | | |
| FIELD CHANGES | | | |

BRUNSWICK
PLEASANT STREET

TYPICAL SECTIONS

SHEET NUMBER

1

OF 1

# Project Stationing

| Left Side | Station | Right Side |
|---|---|---|
| | **End Project**<br>**26+14** | |
| | 23+87 | Middle St. |
| | 21+01 | CMP Pole 7 1/2 |
| Union St. | 19+93 | Union St. |
| | 16+54 | CMP Pole 10 1/2 |
| | 12+58 | CMP Pole 14 |
| Cushing St. | 11+30 | |
| Railroad Crossing | 10+98 | Railroad Crossing |
| | 8+89 | CMP Pole 18 |
| | 8+65 | Spring St. |
| | 5+00 | CMP Pole 21 1/2 |
| | 2+47 | CMP Pole 23 |
| | 0+02 | CMP Pole 26 |
| Mill St. (Rte 1) | **0+00**<br>**Begin Project** | |

# Pavement Marking

| Note | Pvmt Markings | Center Line Station | Pvmt Markings | Note |
|---|---|---|---|---|
| **End Project** | | **26+14** | | **End Project** |
| | | DASH | | |
| | CROSSWALK | 21+93 | CROSSWALK | |
| | | DASH | | |
| | CROSSWALK | 20+18 | CROSSWALK | |
| | | DASH | | |
| | | 19+93 | CROSSWALK | |
| Union St. | | GAP | | Union St. |
| | | 19+59 | STOPBAR | |
| | CROSSWALK | 19+69 | CROSSWALK | |
| | CROSSWALK | 16+86 | CROSSWALK | |
| | | DASH | | |
| | CROSSWALK | 11+30 | | |
| | | DASH | | |
| | | 11+18 | | |
| | STOP BAR | 10+78 | STOP BAR | |
| | STOP BAR | 9+55 | STOP BAR | |
| | R**X**R | 9+30 | R**X**R | |
| | STOP BAR | 9+05 | STOP BAR | |
| | | DASH | | |
| **Begin Project** | | **0+00** | | **Begin Project** |

# Construction Notes

## 202.202 REMOVING PAVEMENT SURFACE

| Station | To | Station | Length(Ft) | Width(Ft) |
|---|---|---|---|---|
| 0+00 | | 8+27 | 827 | 35 |
| 8+27 | | 26+14 | 1787 | 40 |

Milling grades and/or elevations will be set in the field by the Resident prior to milling operations.

## 202.2021 REMOVING PAVEMENT SURFACE - SIDEWALK

| Station | To | Station | Side |
|---|---|---|---|
| 0+00 | | 0+38 | LT |

## 202.203 PAVEMENT BUTT JOINTS

| Description | Quantity |
|---|---|
| Paved Drives | 5 |

## 411.10 UNTREATED AGGREGATE SURFACE COURSE, TRUCK MEASURE

This Item to be used to back up gravel drives as directed by Resident.

## 604.161 ALTERING CATCH BASIN

| Station | Side |
|---|---|
| 0+71 | LT |
| 9+65 | RT |
| 11+34 | RT |
| 19+60 | RT |
| 23+45 | RT |
| 23+65 | LT |
| 24+14 | LT |
| 25+79 | LT |
| 25+92 | RT |

# Construction Notes (cont.)

## 604.164 REBUILDING CATCH BASIN

| Station | Side |
|---|---|
| 10+55 | LT |

## 604.18 ADJUSTING MANHOLE OR CATCH BASIN TO GRADE

| Station | Side |
|---|---|
| 1+61 | RT |
| 8+11 | LT |
| 8+30 | RT |

## 609.31 CURB TYPE 3

| Station | To | Station | Side |
|---|---|---|---|
| 0+00 | | 0+86 | LT |
| 1+11 | | 1+48 | LT |
| 1+74 | | 1+48 | LT |
| 9+35 | | 9+63 | RT |

## 609.38 RESET CURB TYPE 1

| Station | To | Station | Side |
|---|---|---|---|
| 19+57 | | 19+63 | RT |

## 615.07 LOAM

This Item to be used as directed by Resident.

## 618.1301 SEEDING METHOD NUMBER 1, PLAN QUANTITY

This Item to be used in locations where Loam has been placed, and/or as directed by the Resident.

## 619.1201 MULCH, PLAN QUANTITY

This Item to be used in all areas where the soil has been disturbed.

## Construction Notes (cont.)

## 627.75 WHITE OR YELLOW PAVEMENT & CURB MARKING

| | |
|---|---|
| 18" Stop Bar | 60 $ft^2$ |
| 24" Stop Bar | 480 $ft^2$ |
| Crosswalk | 912 $ft^2$ |
| Single Arrow | 13 $ft^2$ |
| Double Arrow | 29 $ft^2$ |
| R**X**R | 135 $ft^2$ |

## 627.76 TEMP. PAVEMENT MARKING LINE WHITE OR YELLOW

This Item will require the use of painted temporary marking lines on the milled pavement surface, and Temporary Object Markers (TOMs) on the shim.

## 629.05 HAND LABOR, STRAIGHT TIME
## 631.12 ALL PURPOSE EXCAVATOR (INCLUDING OPERATOR)
## 631.133 SKID STEER (INCLUDING OPERATOR)
## 631.172 TRUCK - LARGE (INCLUDING OPERATOR)

These Items to be used as directed by the Resident.

## 656.75 TEMPORARY SOIL EROSION AND WATER POLLUTION CONTROL

Contractor shall prepare, submit, and implement a Soil Erosion and Water Pollution Control Plan, in accordance with the required documentation.

## GENERAL NOTES

1) All joints between existing and proposed hot bituminous pavement shall be butted. Payment shall be made under Item 202.203 Pavement Butt Joint.

2) Construct Butt Joints at all paved drives and entrances.

3) All waste material not used on the project shall be disposed of off the project in waste areas approved by the Resident

4) The Town of Brunswick Public Works department will be given first right of refusal for all catch basin grates and/or frames that are not reused. All catch basin items not so claimed by the Town of Brunswick will become the property of the contractor.

5) Any damage to the slopes caused by the Contractor's equipment, personnel, or operation shall be repaired to the satisfaction of the Resident. All work, equipment and materials required to make repairs shall be at the Contractor's expense.

6) A 3 ft paved lip shall be placed at all gravel entrances, except woods and field entrances, unless otherwise directed by the Resident.

7) Item # 411.10, Untreated Aggregate Surface Course, may also meet the gradation requirements of item # 204.20, Add Shoulder Aggregate.

8) Any necessary cleaning of existing pavement prior to paving shall be incidental to the related paving items.

9) All existing paved shoulders and widenings to be resurfaced as directed by the Resident.

10) Shoulder shim shall taper to 0 inch at face of existing curb and guardrail.

11) No existing drainage shall be abandoned, removed or plugged without prior approval of the Resident.

12) In areas where curb Type 1 will be reset, the existing curb suitable for use as terminal ends shall be utilized as such and paid for under Item 609.38 (Reset Curb Type 1).

13) Backing up bituminous curb is incidental to the curb items. In areas where new bituminous curb is designated to replace existing, the removal of the old bituminous curb shall be incidental to the new curb.

14) Trim all tree branches to 20 ft above pavement. Payment shall be made under the appropriate labor and equipment rental items.

15) "Undetermined Locations" shall be determined by the Resident.

## GENERAL NOTES

16) Stations referenced are approximate.

17) Grind transition tapers at Catch Basins under Item No. 202.203, Pavement Butt Joints, as directed by the Resident.

18) All work shall be done in accordance with the Maine Department of Transportation's Best Management Practices for Erosion Control & Sediment Control, January, 2000.

19) Contractor will final stripe the project. The Contractor is responsible for transferring the existing striping pattern to the surface course.

20) Temporary Pavement Marking Lines will be painted on all milled surfaces at the conclusion of the day on which the pavement was milled. Temporary Object Markers (TOMs) will be acceptable for use only on shim and surface.

21) Milling depths will average 2 inches, with grades and elevations being determined in the field by the Resident.

22) All millings shall become property of the MDOT, and shall be delivered and stockpiled at the Topsham maintenance camp. Payment for delivery and stockpiling will be incidental to Item 202.202. Stockpiling shall include all equipment, personnel and all other necessary incidentals required to construct stockpiles as per normal construction practices.

# STATE OF MAINE
# DEPARTMENT OF TRANSPORTATION

## NH-1290(800)E

BEGIN PROJECT STA 39+20 = RLM 76.50

END PROJECT STA 65+83 = RLM 77.00

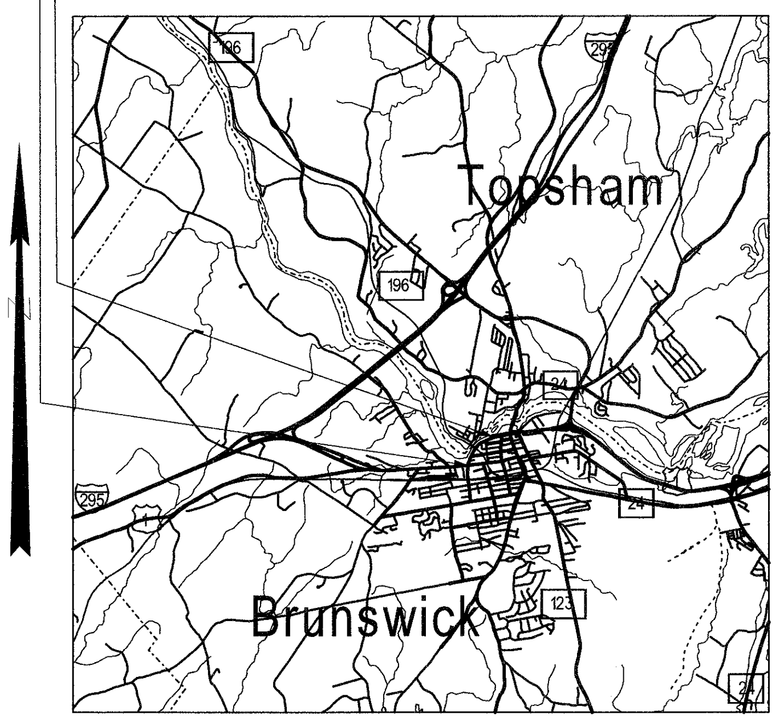


LOCATION MAP

# BRUNSWICK

## CUMBERLAND COUNTY

ROUTE 1

## NH-1290(800)E

PROJECT LENGTH : 0.50 mi.

## LEVEL 2

HOT MIX ASPHALT OVERLAY,
PAVEMENT MILLING, DRAINAGE,
AND SAFETY IMPROVEMENTS

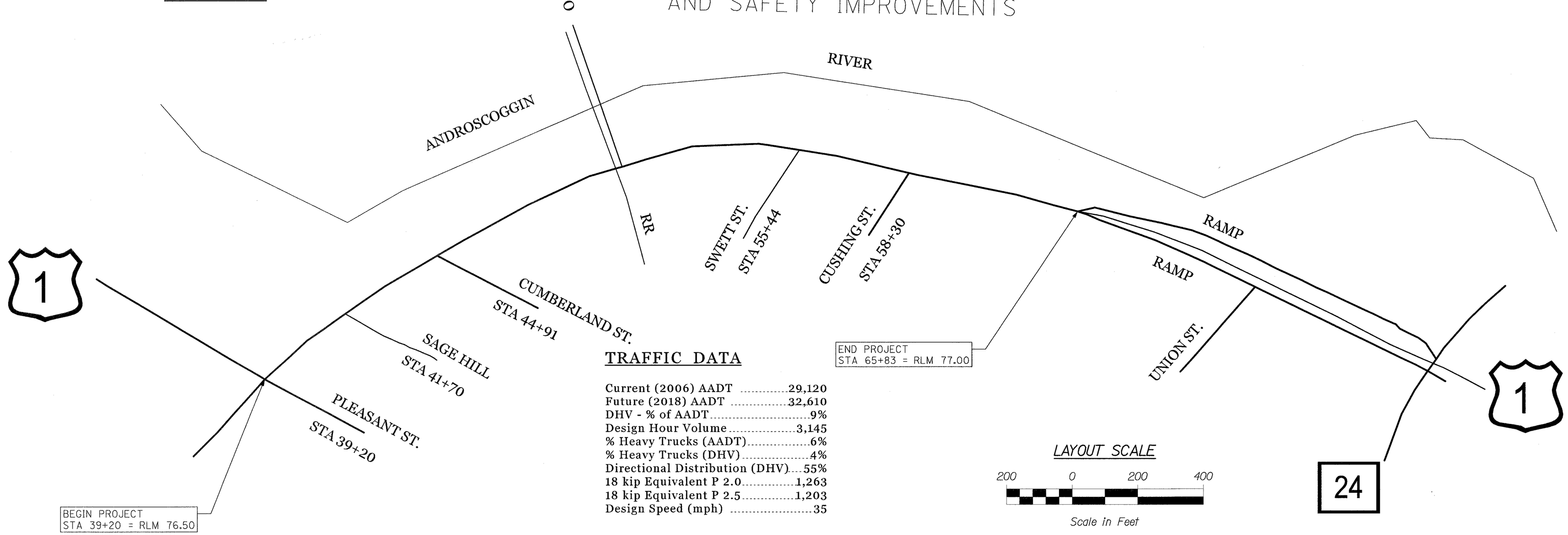


### TRAFFIC DATA

| | |
|---|---|
| Current (2006) AADT | 29,120 |
| Future (2018) AADT | 32,610 |
| DHV - % of AADT | 9% |
| Design Hour Volume | 3,145 |
| % Heavy Trucks (AADT) | 6% |
| % Heavy Trucks (DHV) | 4% |
| Directional Distribution (DHV) | 55% |
| 18 kip Equivalent P 2.0 | 1,263 |
| 18 kip Equivalent P 2.5 | 1,203 |
| Design Speed (mph) | 35 |

LAYOUT SCALE

200 0 200 400

Scale in Feet

PIN 12908.00

NH-1290(800)E

STATE OF MAINE
DEPARTMENT OF TRANSPORTATION

APPROVED

| | DATE |
|---|---|
| COMMISSIONER: | 6/1/06 |
| CHIEF ENGINEER: | 06/1/06 |

STATE OF MAINE DEAN A. LESSARD #8225 REGISTERED PROFESSIONAL ENGINEER

| | |
|---|---|
| SIGNATURE | |
| P.E. NUMBER | 8225 |
| DATE | 5/24/06 |

PROJECT INFORMATION

| | |
|---|---|
| PROGRAM | REGIONAL HIGHWAY PROG. |
| PROJECT MANAGER | DEAN LESSARD |
| DESIGNER | TONY FONTAINE |
| CONSULTANT | |
| PROJECT RESIDENT | |
| CONTRACTOR | |
| PROJECT COMPLETION DATE | |

BRUNSWICK
ROUTE 1

TITLE SHEET

SHEET NUMBER

1

OF 1

Filename: ...\00\HIGHWAY\MSTA\001_Title.dgn Division: HIGHWAY Username: randy.jillian Date:5/23/2006

# 3/4 " Hot Mix Asphalt Overlay

## Mill and Fill

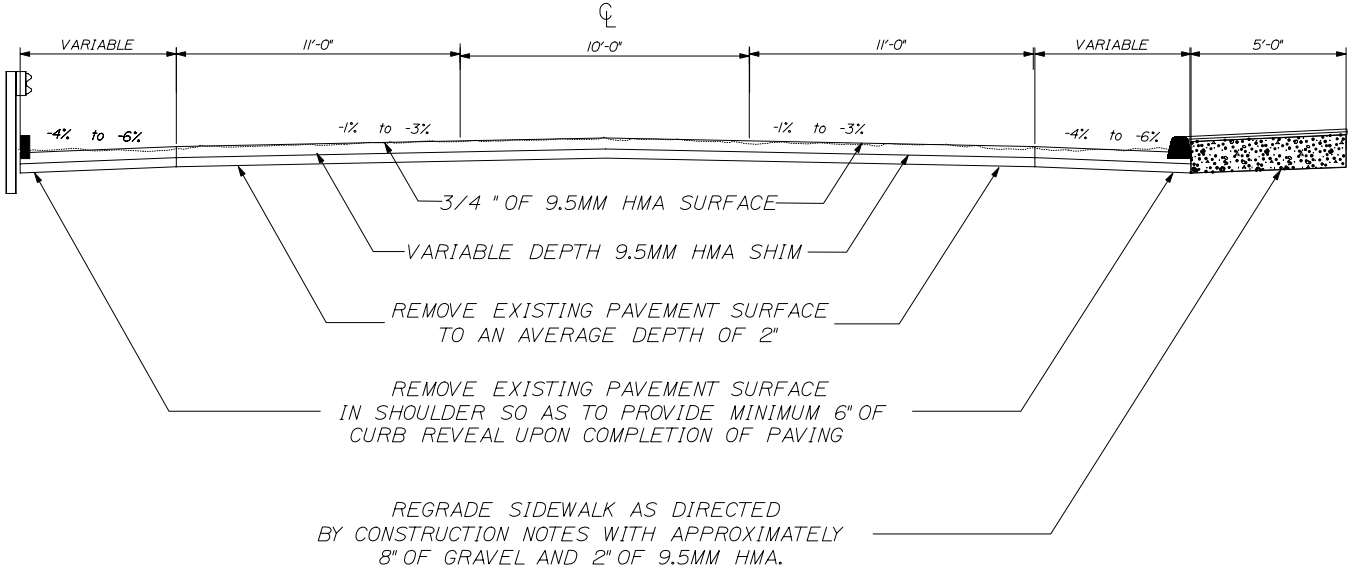


NOT TO SCALE

STATE OF MAINE
DEPARTMENT OF TRANSPORTATION

NH-1290(800)E

PIN 12908.00

HIGHWAY PLANS

| | | BY | DATE |
|---|---|---|---|
| PROJ. MANAGER | DEAN LESSARD | | |
| DESIGN-DETAILED | ------ | G. COURTEMANCHE | |
| CHECKED-REVIEWED | ------ | ------ | |
| DESIGN-DETAILED2 | ------ | ------ | |
| DESIGN-DETAILED3 | ------ | ------ | |
| REVISIONS 1 | ------ | ------ | |
| REVISIONS 2 | ------ | ------ | |
| REVISIONS 3 | ------ | ------ | |
| REVISIONS 4 | ------ | ------ | |
| FIELD CHANGES | ------ | ------ | |

SIGNATURE

P.E. NUMBER

DATE

BRUNSWICK
ROUTE 1

TYPICAL SECTIONS

SHEET NUMBER

1

OF 1

Filename: $file$ Division: $wkgroup$ Username: $user$ Date:$date$

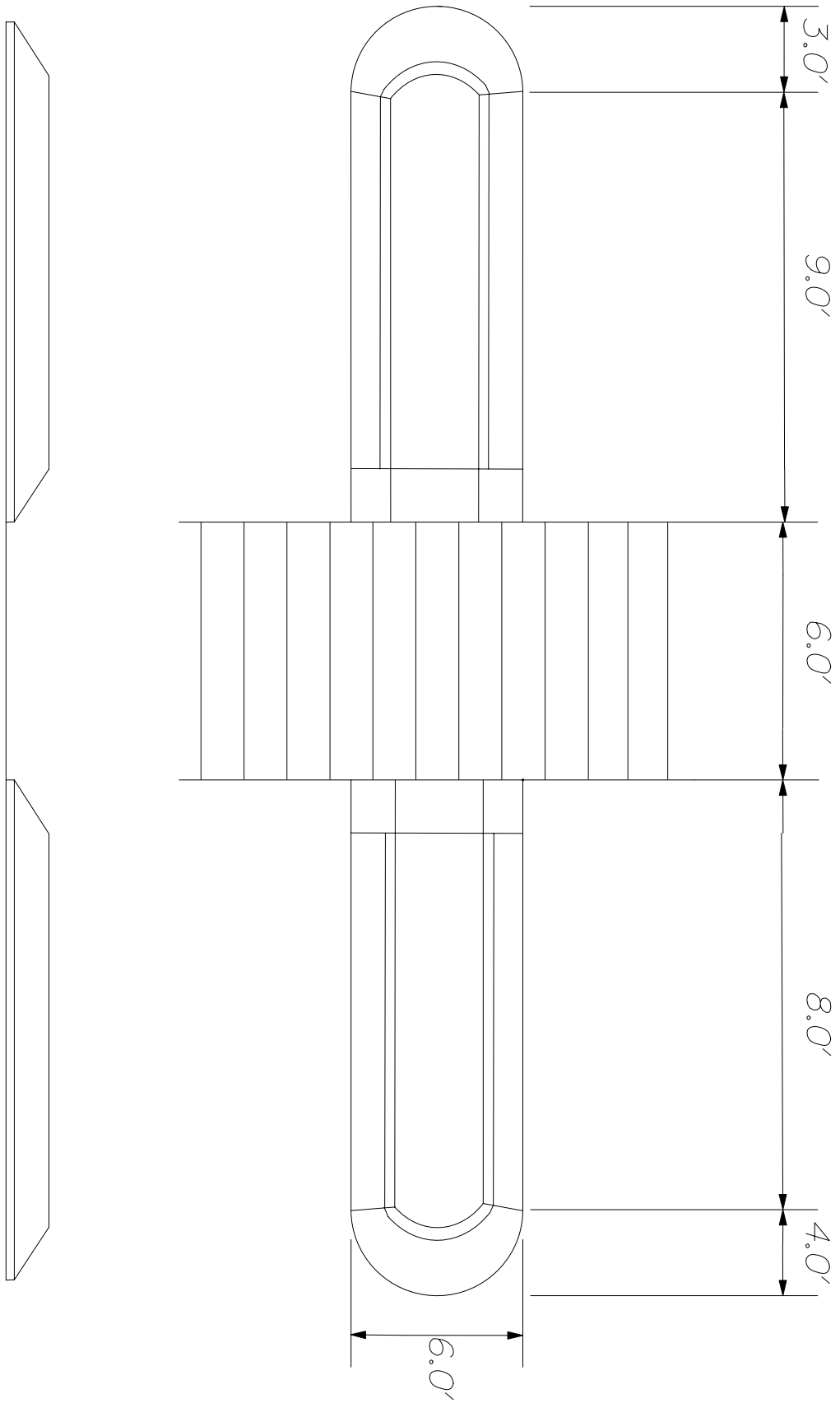


SHEET NUMBER 1 OF 1

BRUNSWICK
ROUTE 1

ISLAND DETAILS

| PROJ. MANAGER | DEAN LESSARD | BY | DATE |
|---|---|---|---|
| DESIGN-DETAILED | ANTONY. FONTAINE | DURTEMANCHE | |
| CHECKED-REVIEWED | ------ | ------ | ------ |
| DESIGN2-DETAILED2 | ------ | ------ | ------ |
| DESIGN3-DETAILED3 | ------ | ------ | ------ |
| REVISIONS 1 | ------ | | ------ |
| REVISIONS 2 | ------ | | ------ |
| REVISIONS 3 | ------ | | ------ |
| REVISIONS 4 | ------ | | ------ |
| FIELD CHANGES | ------ | | ------ |

SIGNATURE

P.E. NUMBER

DATE

STATE OF MAINE
DEPARTMENT OF TRANSPORTATION

NH-1290(800)E

PIN
12908.00

HIGHWAY PLANS

# PAVEMENT MARKING PLAN

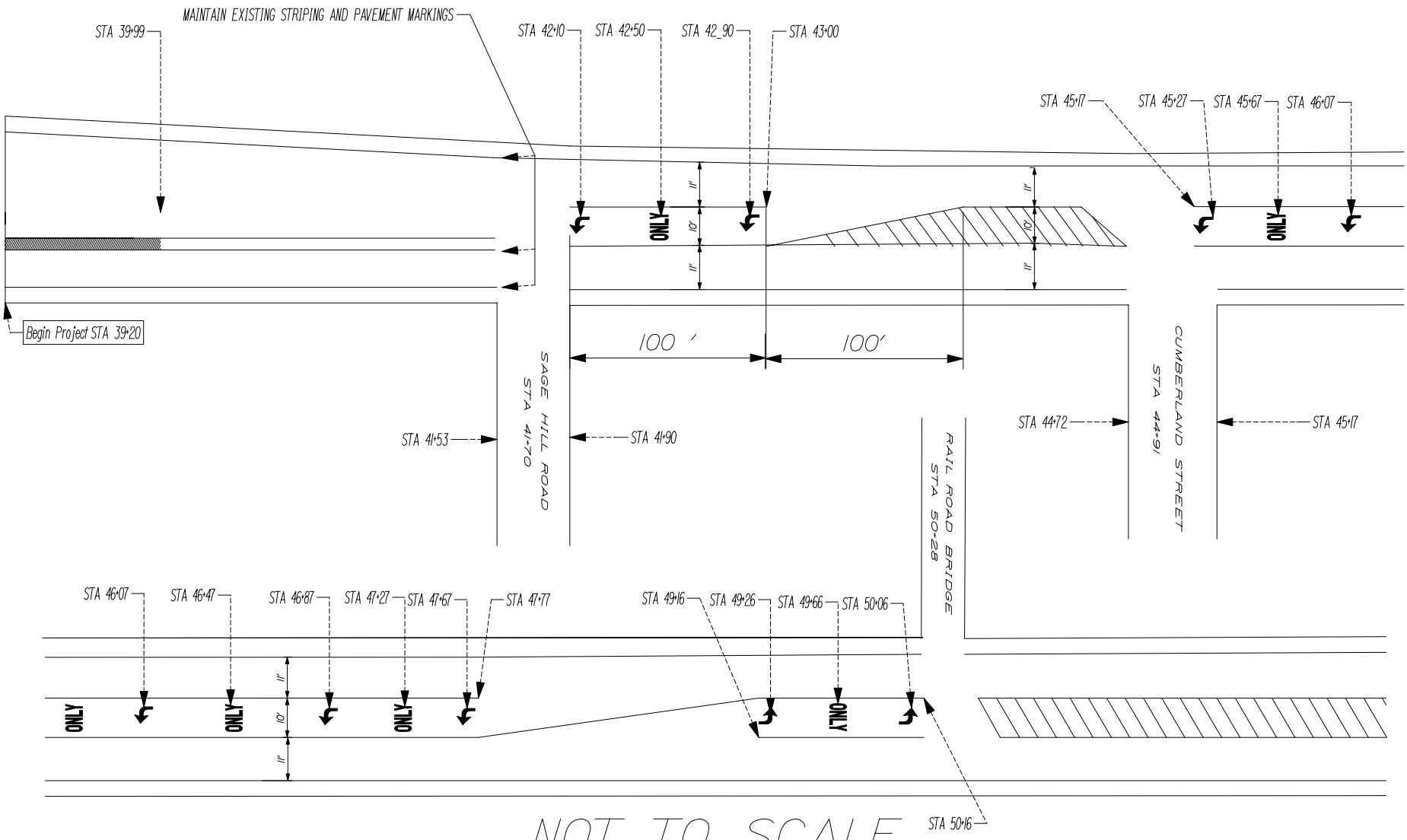


NOT TO SCALE

STATE OF MAINE
DEPARTMENT OF TRANSPORTATION

NH-1290(800)E

PIN 12908.00

HIGHWAY PLANS

| | | | |
|---|---|---|---|
| PROJ. MANAGER | DEAN LESSARD | BY | DATE |
| DESIGN-DETAILED | G. COURTEMANCHE | | |
| CHECKED-REVIEWED | | | |
| DESIGN2-DETAILED2 | | | SIGNATURE |
| DESIGN3-DETAILED3 | | | |
| REVISIONS 1 | | | P.E. NUMBER |
| REVISIONS 2 | | | |
| REVISIONS 3 | | | |
| REVISIONS 4 | | | DATE |
| FIELD CHANGES | | | |

BRUNSWICK
ROUTE 1

STRIPING PLAN

SHEET NUMBER

1

OF 2

Filename: $file$ Division: $wkgroup$ Username: $user$ Date:$date$

# PAVEMENT MARKING PLAN CONT.

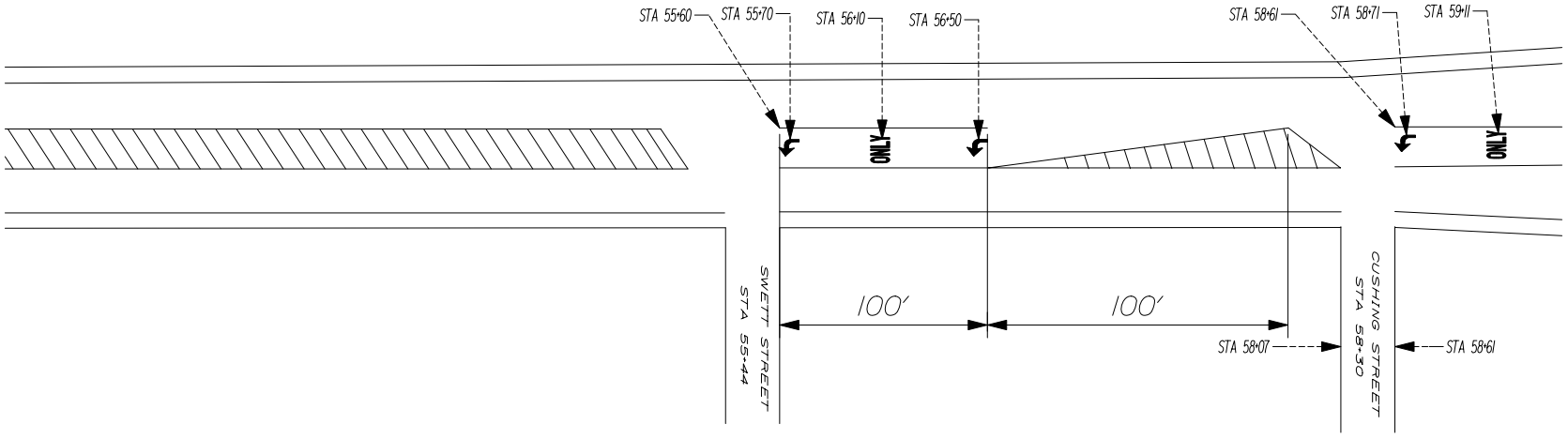


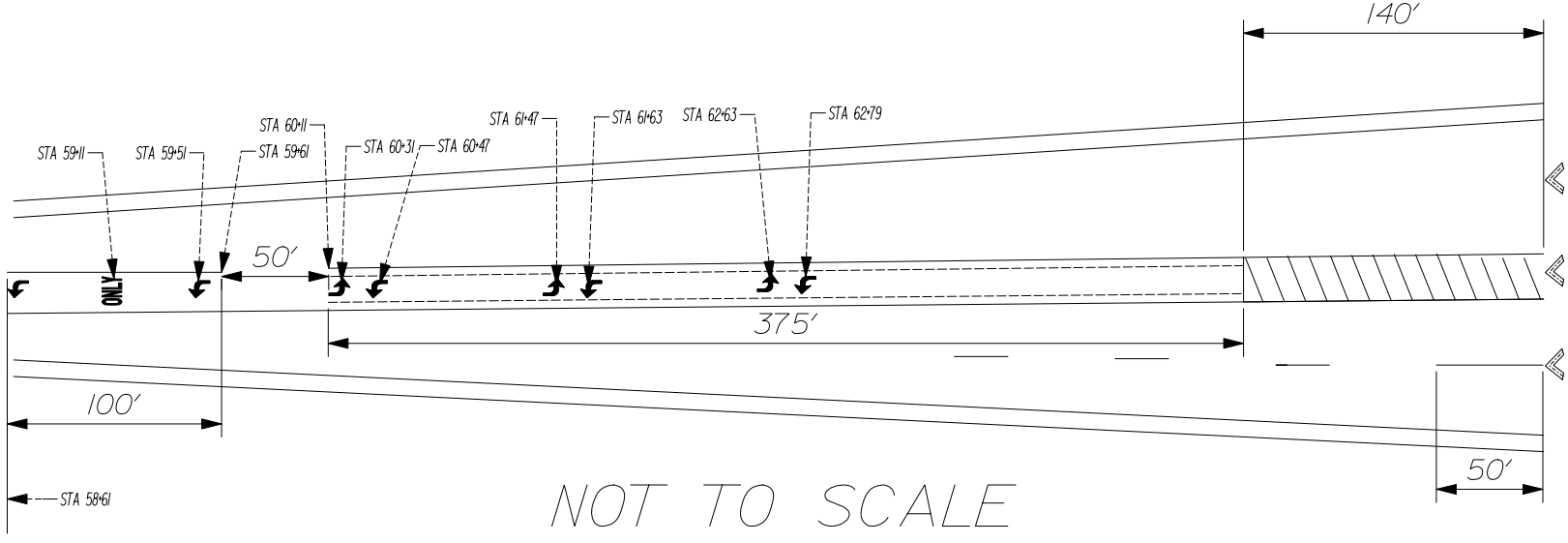


NOT TO SCALE

STATE OF MAINE
DEPARTMENT OF TRANSPORTATION

NH-1290(600)E

PIN
12908.00

HIGHWAY PLANS

| | | | |
|---|---|---|---|
| PROJ. MANAGER | DEAN LESSARD | BY | DATE |
| DESIGN-DETAILED | | G. COURTEMANCHE | |
| CHECKED-DETAILED | | ------ | SIGNATURE |
| DESIGN2-DETAILED2 | | ------ | ------ |
| DESIGN3-DETAILED3 | | ------ | ------ |
| | | | P.E. NUMBER |
| REVISIONS 1 | | ------ | ------ |
| REVISIONS 2 | | ------ | ------ |
| REVISIONS 3 | | ------ | ------ |
| REVISIONS 4 | | ------ | DATE |
| FIELD CHANGES | | ------ | ------ |

BRUNSWICK
ROUTE 1

STRIPING PLAN

SHEET NUMBER
2
OF 2

Filename: $file$ Division: $wkgroup$ Username: $user$ Date:$date$

**Brunswick**
**NH-1290(800)E**
**Route 1, Level 2**

# Project Stationing

| Left Side | Station | Right Side |
|---|---|---|
| | **End Project** | |
| Maine St. ramp | **65+83** | Maine St. ramp |
| | 64+31 | Hydrant |
| | 61+00 | Cmp Pole 10 |
| | 58+30 | Cushing St. |
| | 55+44 | Swett St. |
| | 52+58 | (Pedestrian Crossing 300') |
| RR Bridge | 50+28 | |
| | 48+35 | CMP Pole 22/20 |
| | 46+74 | SIGN (14' 0") |
| Hydrant | 44+63 | |
| | 44+91 | Cumberland St. |
| | 43+04 | CMP Pole 26 |
| | 41+70 | Sage Hill Rd. |
| | 40+23 | CMP Pole 28/26 |
| | **39+20** | Pleasant St. |
| | **Begin Project** | |

# Construction Notes

## 202.202 REMOVING PAVEMENT SURFACE

| Station | To | Station | Length(Ft) | Avg. Width(Ft) |
|---|---|---|---|---|
| 39+20 | | 39+99 | 79 | 47.5 |
| 39+99 | | 41+70 | 171 | 42.5 |
| 41+70 | | 44+91 | 321 | 40.5 |
| 44+91 | | 46+74 | 183 | 38.5 |
| 46+74 | | 47+29 | 55 | 35.0 |
| 47+29 | | 48+35 | 106 | 34.5 |
| 48+35 | | 52+99 | 464 | 35.0 |
| 52+99 | | 55+44 | 245 | 38.0 |
| 55+44 | | 56+99 | 155 | 41.0 |
| 56+99 | | 58+30 | 131 | 41.5 |
| 58+30 | | 61+00 | 270 | 41.5 |
| 61+00 | | 62+19 | 119 | 41.0 |
| 62+19 | | 64+31 | 212 | 55.0 |
| 64+31 | | 65+83 | 152 | 84.5 |

Milling grades and/or elevations will be set in the field by the Resident prior to milling operations.

## 202.203 PAVEMENT BUTT JOINTS

| Description | Station |
|---|---|
| Begin Project | 39+20 |
| End Project | 65+83 |

| Description | Quantity |
|---|---|
| Paved Drives | 13 |
| Sideroads | 5 |

## 411.10 UNTREATED AGGREGATE SURFACE COURSE, TRUCK MEASURE

This Item to be used to back up gravel drives as directed by Resident.

# Construction Notes (cont.)

## 604.161 ALTERING CATCH BASIN

| Station | Side |
|---|---|
| 40+54 | LT |
| 41+35 | RT |
| 41+35 | LT |
| 42+79 | LT |
| 44+51 | LT |
| 47+00 | LT |
| 49+65 | LT |
| 49+68 | RT |
| 51+72 | RT |
| 51+72 | LT |
| 55+21 | RT |
| 55+68 | RT |
| 55+90 | RT |
| 55+90 | LT |
| 58+08 | RT |
| 58+68 | LT |
| 58+78 | RT |
| 59+69 | LT |
| 61+69 | RT |
| 61+69 | LT |

## 606.178 GUARDRAIL BEAM

This Item to be used to replaced ± 21 damaged beams at various locations as directed by the Resident.

## 606.353 REFLECTORIZED FLEXIBLE GUARDRAIL MARKER

| Quantity |
|---|
| 6 |

This Item to be used @ each of the new GR 350 Flared Terminals per MDOT standards.

# Construction Notes (cont.)

## 606.3651 GUARDRAIL - REMOVE, MODIFY, AND RESET EXISTING TO 3D

| Station | To | Station | Side | Note |
|---|---|---|---|---|
| 47+36 | | 50+15 | LT | GR posts' location will **not** change. |
| 50+41 | | 56+43 | LT | GR posts' location will **not** change. |
| 59+00 | | 65+83 | LT | GR posts **will** require relocation except as noted for Item 606.48. |

This Item to be used to relocate and modify existing GR type 3B to type 3D per MDOT standards.

## 606.367 REPLACE UNUSEABLE EXISTING GUARDRAIL POSTS

This Item to be used to replace any existing damaged GR posts at undetermined locations as directed by the Resident.

## 606.48 SINGLE GALVANIZED STEEL POST

| Station | To | Station | Side | Quantity (ea) |
|---|---|---|---|---|
| 60+07 | | 61+71 | LT | 11 |

These posts are to be **8'** in length due to their proximity to slope, and will replace existing 6' posts during Remove/Modify/Reset of existing GR.

## 606.79 GUARDRAIL 350 FLARED TERMINAL

| Station | Side |
|---|---|
| 46+98 | LT |
| 56+81 | LT |
| 59+38 | LT |

# Construction Notes (cont.)

## 608.26 CURB RAMP DETECTABLE WARNING FIELD

| Station | Side |
|---|---|
| 41+51 | RT |
| 41+92 | RT |
| 44+67 | LT |
| 44+66 | RT |
| 45+26 | RT |
| 55+17 | RT |
| 55+72 | RT |
| 58+07 | RT |
| 58+27 | LT |
| 58+66 | RT |

This item to be used at each pedestrian crosswalk.

## 608.46 REGRADING SIDEWALK

| Station | To | Station | Side | Width (ft) |
|---|---|---|---|---|
| 39+73 | | 41+51 | RT | 5 |
| 41+92 | | 44+66 | RT | 5 |
| 45+26 | | 47+23 | RT | 5 |
| 47+43 | | 55+17 | RT | 5 |
| 55+72 | | 56+49 | RT | 5 |
| 56+72 | | 58+07 | RT | 5 |
| 58+61 | | 58+98 | RT | 5 |
| 59+29 | | 59+96 | RT | 5 |
| 60+33 | | 62+42 | RT | 5 |
| 62+57 | | 63+52 | RT | 5 |
| 63+68 | | 64+03 | RT | 5 |
| 64+19 | | 64+74 | RT | 5 |
| 65+19 | | 65+83 | RT | 5 |
| 40+78 | | 42+12 | LT | 5 |
| 42+70 | | 44+67 | LT | 5 |
| 58+30 | | 58+62 | LT | 5 |
| 58+97 | | 62+30 | LT | 5 |

# Construction Notes (cont.)

## 609.31 CURB TYPE 3, (mold 1)

| Left Side | | | Right Side | | |
|---|---|---|---|---|---|
| **Station** | **To** | **Station** | **Station** | **To** | **Station** |
| 40+78 | | 42+12 | 39+20 | | 41+51 |
| 42+70 | | 45+50 | 41+92 | | 44+66 |
| 58+30 | | 58+62 | 45+26 | | 47+23 |
| 58+97 | | 62+30 | 47+43 | | 55+17 |
| 58+02 | | 58+91 | 55+72 | | 56+49 |
| | | | 56+72 | | 58+07 |
| | | | 58+61 | | 58+98 |
| | | | 59+29 | | 59+96 |
| | | | 60+33 | | 62+42 |
| | | | 62+57 | | 63+52 |
| | | | 63+68 | | 64+03 |
| | | | 64+19 | | 64+74 |
| | | | 65+19 | | 65+83 |

## 609.38 RESET CURB TYPE 1

| Station | To | Station | Side |
|---|---|---|---|
| 62+30 | | 65+87 | LT |

## 609.34 CURB TYPE 5

**Pedestrian Island Exact location to be set in the field by resident**
**45 LF**

## 609.35 CURB TYPE 5 CIRCULAR

**Pedestrian Island Exact location to be set in the field by resident**
**12 LF**

## 615.07 LOAM

This Item to be used behind sidewalks in landscaped areas, and/or as directed by the Resident.

## 618.1301 SEEDING METHOD NUMBER 1, PLAN QUANTITY

This Item to be used in areas where loam has been placed, and/or as directed by the Resident.

# Construction Notes (cont.)

## 618.1401 SEEDING METHOD NUMBER 2, PLAN QUANTITY

This Item to be used in areas where the soil has been disturbed, and/or as directed by the resident.

## 619.1201 MULCH, PLAN QUANTITY

This Item to be used in all areas where the soil has been disturbed, and/or as directed by the resident.

## 627.75 WHITE OR YELLOW PAVEMENT & CURB MARKING

| | |
|---|---|
| **12" Stop Bar** | **17 ft** |
| **Crosswalks** | **350 $ft^2$** |
| **Single Arrows** | **337 $ft^2$** |
| **Double Arrows** | **87 $ft^2$** |
| **"ONLY"** | **154 $ft^2$** |
| **Misc.** | **1607** |

## 627.76 TEMP. PAVEMENT MARKING LINE WHITE OR YELLOW

This Item will require the use of painted temporary marking lines on the milled pavement surface, and Temporary Object Markers (TOMs) on the shim.

## 629.05 HAND LABOR, STRAIGHT TIME
## 631.12 ALL PURPOSE EXCAVATOR (INCLUDING OPERATOR)
## 631.133 SKID STEER (INCLUDING OPERATOR)
## 631.172 TRUCK - LARGE (INCLUDING OPERATOR)
## 631.18 CHAIN SAW RENTAL (INCLUDING OPERATOR)

These Items to be used as directed by the Resident.

## 656.75 TEMPORARY SOIL EROSION AND WATER POLLUTION CONTROL

Contractor shall prepare, submit, and implement a Soil Erosion and Water Pollution Control Plan, in accordance with the required documentation.

## GENERAL NOTES

1) All joints between existing and proposed hot bituminous pavement shall be butted. Payment shall be made under Item 202.203 Pavement Butt Joint.

2) Construct Butt Joints at all paved drives and entrances.

3) Where deemed necessary by the Resident, winter sand shall be removed from the edges of shoulders and placed in designated areas or disposed of. Payment will be made under the appropriate hourly rental items.

4) All non-guardrail inslopes shall be rototilled, or graded, if necessary, so that the slope does not exceed 3:1 from the edge of the shoulder break. Excess material will be placed in designated areas, or disposed of, as designated by the Resident. Payment will be made under appropriate hourly contract items.

5) All waste material not used on the project shall be disposed of off the project in waste areas approved by the Resident

6) The Town of Brunswick Public Works department will be given first right of refusal for all catch basin grates and/or frames that are not reused. All catch basin items not so claimed by the Town of Brunswick will become the property of the contractor.

7) Any damage to the slopes caused by the Contractor's equipment, personnel, or operation shall be repaired to the satisfaction of the Resident. All work, equipment and materials required to make repairs shall be at the Contractor's expense.

8) A 3 ft paved lip shall be placed at all gravel entrances, except woods and field entrances, unless otherwise directed by the Resident.

9) Item # 411.10, Untreated Aggregate Surface Course, may also meet the gradation requirements of item # 204.20, Add Shoulder Aggregate.

10) Any necessary cleaning of existing pavement prior to paving shall be incidental to the related paving items.

11) All existing paved shoulders and widenings to be resurfaced as directed by the Resident.

12) Shoulder shim shall taper to 0 inch at face of existing curb and guardrail.

13) No existing drainage shall be abandoned, removed or plugged without prior approval of the Resident.

14) 350 Flared Terminals shall be installed concurrently with the placement of each section of beam guardrail.

## GENERAL NOTES

15) Guardrail which is removed and not reused on the project becomes property of the Contractor. Removal and disposal shall be incidental to the guardrail items.

16) Holes created by Guardrail removal will be filled and compacted with approved materials as directed by the Resident. Payment to be considered incidental to the guardrail items.

17) In areas where curb Type 1 will be reset, the existing curb suitable for use as terminal ends shall be utilized as such and paid for under Item 609.38 (Reset Curb Type 1).

18) Backing up bituminous curb is incidental to the curb items. In areas where new bituminous curb is designated to replace existing, the removal of the old bituminous curb shall be incidental to the new curb.

19) "Undetermined Locations" shall be determined by the Resident.

20) Stations referenced are approximate.

21) Grind transition tapers at Catch Basins under Item No. 202.203, Pavement Butt Joints, as directed by the Resident.

22) All work shall be done in accordance with the Maine Department of Transportation's Best Management Practices for Erosion Control & Sediment Control, January, 2000.

23) Contractor will final stripe the project. The Contractor is responsible for transferring the existing striping pattern to the surface course.

24) Temporary Pavement Marking Lines will be painted on all milled surfaces at the conclusion of the day on which the pavement is milled. Temporary Object Markers (TOMs) will be acceptable for use only on shim.

25) Milling depths will average 2 inches, with grades and elevations being determined in the field by the Resident.

26) All millings shall become property of the MDOT, and shall be delivered and stockpiled at the Topsham maintenance camp. Payment for delivery and stockpiling will be incidental to Item 202.202. Stockpiling shall include all equipment, personnel and all other necessary incidentals required to construct stockpiles as per normal construction practices.

# STATE OF MAINE
# DEPARTMENT OF TRANSPORTATION

## STP-1309(400)X

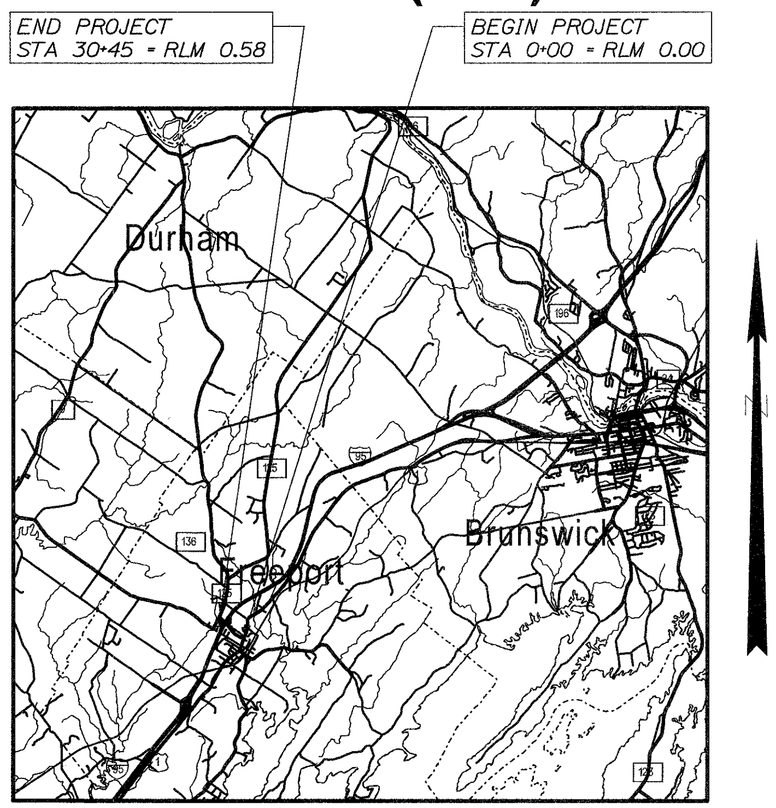


LOCATION MAP

2 0 2 4
Scale in Miles

# FREEPORT

## CUMBERLAND COUNTY

MALLETT DRIVE

## STP-1309(400)X

PROJECT LENGTH : 0.58 mi.

LEVEL 2

HOT MIX ASPHALT OVERLAY,
DRAINAGE AND GUARDRAIL
IMPROVEMENTS

### TRAFFIC DATA

| | |
|---|---|
| Current (2006) AADT | 12560 |
| Future (2018) AADT | 14070 |
| DHV - % of AADT | 10% |
| Design Hour Volume | 1507 |
| % Heavy Trucks (AADT) | 5% |
| % Heavy Trucks (DHV) | 2% |
| Directional Distribution (DHV) | 65% |
| 18 kip Equivalent P 2.0 | 252 |
| 18 kip Equivalent P 2.5 | 248 |
| Design Speed (mph) | 35 |

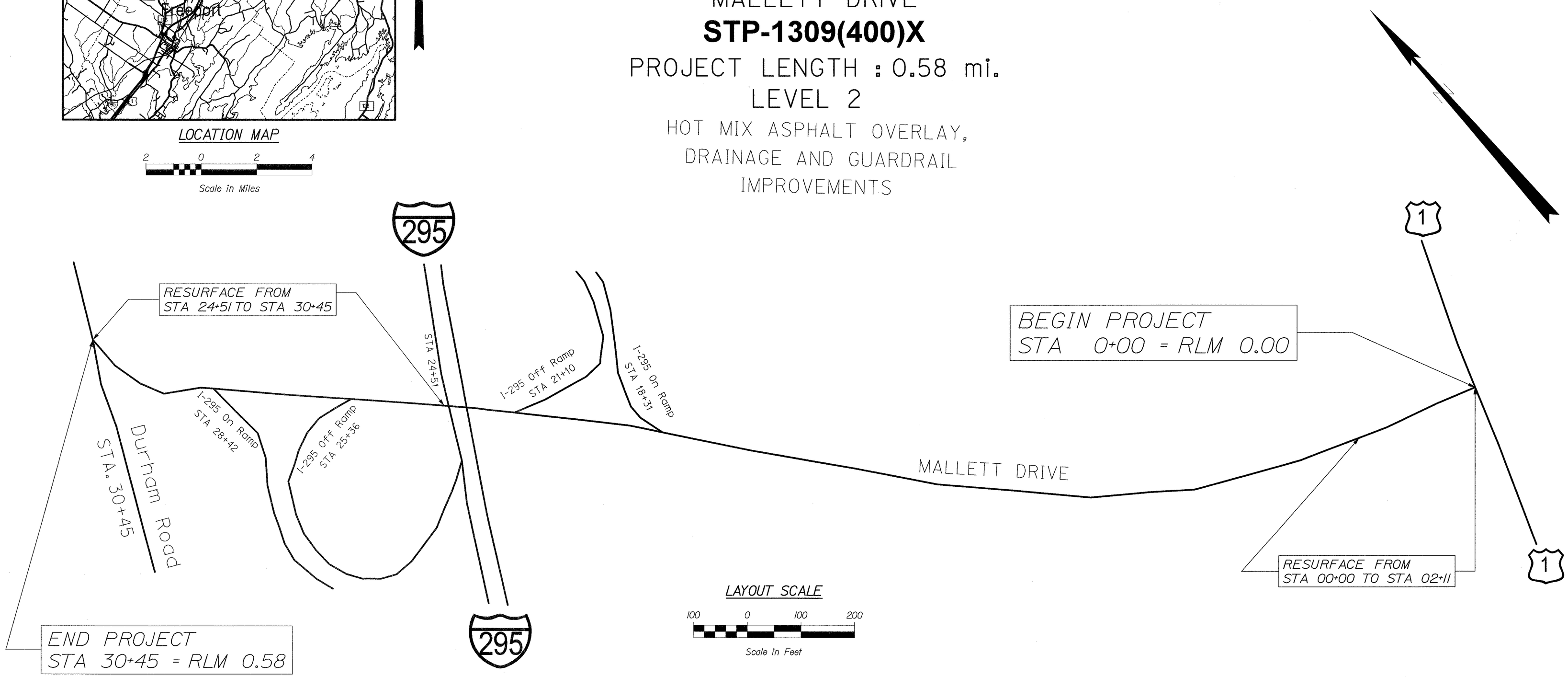


PIN 13094.00

STP-1309(400)X

STATE OF MAINE
DEPARTMENT OF TRANSPORTATION

| | | DATE |
|---|---|---|
| APPROVED | | |
| COMMISSIONER: | | 6/1/06 |
| CHIEF ENGINEER: | | 06/14/06 |

STATE OF MAINE
DEAN A. LESSARD
#8225
Registered
PROFESSIONAL ENGINEER

| PROJECT INFORMATION | | |
|---|---|---|
| PROGRAM | REGIONAL HIGHWAY PROG | |
| PROJECT MANAGER | DEAN LESSARD | SIGNATURE |
| DESIGNER | GIL COURTEMANCHE | 8225 |
| CONSULTANT | | P.E. NUMBER |
| PROJECT RESIDENT | ANTHONY FONTAINE | 5/26/06 |
| CONTRACTOR | | DATE |
| PROJECT COMPLETION DATE | | |

FREEPORT
MALLETT DRIVE

TITLE SHEET

SHEET NUMBER

1

OF 1

Filename: ...\HIGHWAY\MSTA\001_Title_1.dgn Division: HIGHWAY Username: randy.jillian Date:5/26/2006

# 3/4" Hot Mix Asphalt Overlay

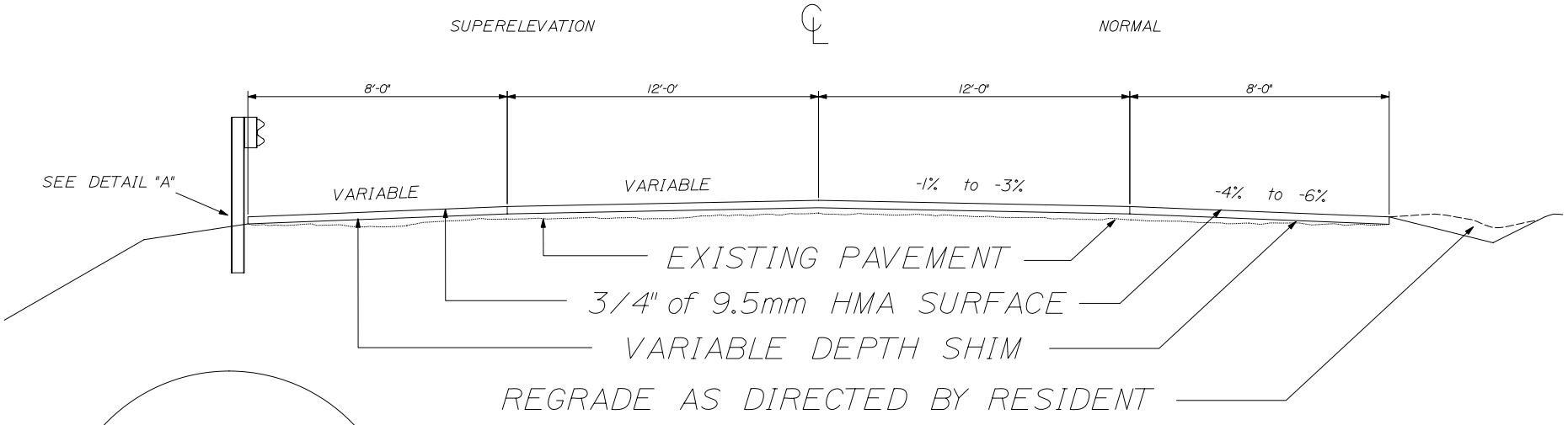


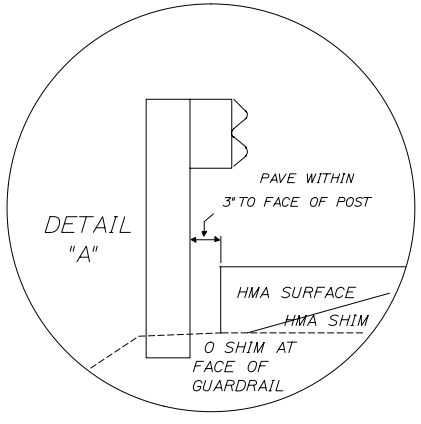


NOT TO SCALE

NOTE:
SHOULDER CROSS SLOPE SHALL BE 2% ON THE HIGH SIDE OF THE SUPERELEVATION WHEN THE ROLLOVER ALGEBRAIC DIFFERANCE IN THE RATE OF CROSS SLOPE EXCEEDS 9%.

STATE OF MAINE
DEPARTMENT OF TRANSPORTATION

PIN 13094.00 HIGHWAY PLANS

| | | BY | DATE |
|---|---|---|---|
| PROJ. MANAGER | DEAN LESSARD | | |
| DESIGN-DETAILED | | G. Courtemanche | |
| CHECKED-REVIEWED | | | |
| DESIGN2-DETAILED2 | | | |
| DESIGN3-DETAILED3 | | | |
| REVISIONS 1 | | | |
| REVISIONS 2 | | | |
| REVISIONS 3 | | | |
| REVISIONS 4 | | | |
| FIELD CHANGES | | | |

SIGNATURE

P.B. NUMBER

DATE

FREEPORT
MALLETT DRIVE
TYPICAL SECTIONS

SHEET NUMBER
1
OF 1

Filename: $file$ Division: $wkgroup$ Username: $user$ Date:$date$

# Project Stationing

| Left Side | Station | Right Side |
|---|---|---|
| **End Project** | **30+45** | **End Project** |
| | 29+46 | "Rte 125  Rte 136" |
| On Ramp I-295 | 28+42 | |
| CMP3 / NET 15 | 26+94 | |
| Off Ramp I-295 | 25+36 | |
| Bridge Abutment | 24+51 | Bridge Abutment |
| Bridge Abutment | 22+41 | Bridge Abutment |
| | 19+57 | CMP 6 / 324 / 10 |
| | 18+31 | On ramp I-295 |
| | 15+49 | CMP 8 / NET 8 |
| | 12+52 | CMP 9 / NET 7 |
| Hydrant | 9+79 | |
| CMP 5 | 7+96 | |
| | 4+03 | CMP 3 |
| | 1+61 | CMP Pole 1 |
| **Begin Project** | **0+00** | **Begin Project** |

**Freeport**
**STP-1309(400)X**
**Mallet Dr,. Level 2**

# Pavement Marking

| Left Lane | Divider Line | Left Lane | Left Cntr Line | Station | Right Cntr Line | Right Lane | Divider Line | Left Lane |
|---|---|---|---|---|---|---|---|---|
| | | | | **END PROJECT** | | | | |
| | | | | **30+45** | | | | |
| | | | SOLID | | SOLID | | | |
| | | | | 27+24 | | | | |
| | | | | GAP | | | | |
| | | | | 26+64 | | | | |
| | | | SOLID | | SOLID | | | |
| | | | | 19+79 | | | | |
| | | | | GAP | | | | |
| | | | | 19+35 | | | | |
| | | | SOLID | | SOLID | | | |
| | | | | 17+90 | | | | |
| | | | | | | | DASH | |
| | | | | 12+23 | | | | |
| | | | | 3+06 | | | | |
| | | | | | | | SOLID | |
| | | | | 2+96 | | | | |
| | | | | 2+43 | | | | |
| | | | | | | | SOLID | |
| | | | | 1+88 | | | | |
| | SOLID | | | | | | | |
| | | | | 1+18 | | | | |
| | | | | 0+52 | | | | |
| | SOLID | | | | | | | |
| | | | | 0+20 | | | | |
| | | | SOLID | | SOLID | | | |
| | | | | **0+00** | | | | |
| | | | | **BEGIN PROJECT** | | | | |

# Construction Notes

## 202.203 PAVEMENT BUTT JOINTS

| Description | Station |
|---|---|
| End Project | 30+45 |
| Mid Point | 2+75 |
| Bridge / north | 24+51 |

| Description | Quantity |
|---|---|
| Paved Drives | 11 |
| Sideroads | 6 |

## 204.41 REHABILITATION OF EXISTING SHOULDER, PLAN QUANTITY

**Left Shoulder**

| Station | To | Station | Length | Average Width(Ft) |
|---|---|---|---|---|
| 0+39 | | 1+69 | 130 | 4 |
| 28+66 | | 30+45 | 179 | 4 |

**Right Shoulder**

| Station | To | Station | Length | Average Width(Ft) |
|---|---|---|---|---|
| 28+69 | | 30+45 | 176 | 4 |

## 211.20 INSLOPE EXCAVATION

| Left Side | | | Right Side | | |
|---|---|---|---|---|---|
| Station | To | Station | Station | To | Station |
| 12+89 | | 14+19 | 11+50 | | 11+85 |
| 16+22 | | 18+82 | | | |
| 28+66 | | 29+60 | | | |

## 211.30 DITCH EXCAVATION

| Left Side | | | Right Side | | |
|---|---|---|---|---|---|
| Station | To | Station | Station | To | Station |
| 0+39 | | 2+75 | 3+29 | | 4+05 |
| 3+52 | | 6+17 | 4+42 | | 5+64 |

# Construction Notes (cont.)

## 211.30 DITCH EXCAVATION (cont.)

| Left Side | | | Right Side | | |
|---|---|---|---|---|---|
| **Station** | **To** | **Station** | **Station** | **To** | **Station** |
| 6+80 | | 8+00 | 10+04 | | 10+50 |
| | | | 10+76 | | 11+24 |

## 604.164 REBUILDING CATCH BASIN

| Station | Side |
|---|---|
| 24+64 | RT |

## 604.18 ADJUSTING MANHOLE OR CATCH BASIN TO GRADE

| Station | Side |
|---|---|
| 24+63 | LT |

## 606.1722 BRIDGE TRANSITION - TYPE II

| Left Side | | Right Side | |
|---|---|---|---|
| **Station** | **Quantity** | **Station** | **Quantity** |
| 22+60 | 1 | 22+60 | 1 |
| 24+51 | 1 | 24+51 | 1 |

**Replace existing connection with Bridge Transition type II.**

# Construction Notes (cont.)

## 606.24 GUARDRAIL TYPE 3D - SINGLE RAIL

| Left Side | | | Right Side | | |
|---|---|---|---|---|---|
| **Station** | **To** | **Station** | **Station** | **To** | **Station** |
| 19+20 | | 22+58 | 21+35 | | 22+60 |
| 24+51 | | 25+89 | 24+51 | | 29+51 |

## 606.242 GUARDRAIL TYPE 3D - OVER 4.5 m [15 feet] radius

| Right Side | | |
|---|---|---|
| **Station** | **To** | **Station** |
| 20+85 | | 21+35 |

## 606.353 REFLECTORIZED FLEXIBLE GUARDRAIL MARKER

| **Quantity** |
|---|
| 2 |

This Item to be used @ each of the GR 350 Flared Terminals per MDOT standards.

## 606.79 GUARDRAIL 350 FLARED TERMINAL

| **Station** | **Side** |
|---|---|
| 29+65 | RT |

## 618.1401 SEEDING METHOD NUMBER 2, PLAN QUANTITY

This Item to be used in areas where the soil has been disturbed, and/or as directed by the Resident.

## 619.1201 MULCH, PLAN QUANTITY

This Item to be used in areas where the soil has been disturbed, and/or as directed by the Resident.

# Construction Notes (cont.)

## 627.75 WHITE OR YELLOW PAVEMENT & CURB MARKING

**Crosswalk**

| Station | Side | Area($Ft^2$) |
|---|---|---|
| 0+00 | LT/RT | 91 |

**Arrows**

| Station | Side | Description |
|---|---|---|
| 0+52 | LT (rt turn) | single arrow |
| 0+52 | LT (lt turn) | single arrow |
| 1+18 | LT (rt turn) | single arrow |
| 1+18 | LT (lt turn) | single arrow |

## 629.05 HAND LABOR, STRAIGHT TIME
## 631.12 ALL PURPOSE EXCAVATOR (INCLUDING OPERATOR)
## 631.133 SKID STEER (INCLUDING OPERATOR)
## 631.172 TRUCK - LARGE (INCLUDING OPERATOR)

These Items to be used as directed by the Resident.

## 656.75 TEMPORARY SOIL EROSION AND WATER POLLUTION CONTROL

Contractor shall prepare, submit, and implement a Soil Erosion and Water Pollution Control Plan, in accordance with the required documentation.

## GENERAL NOTES

1) All joints between existing and proposed hot bituminous pavement shall be butted. Payment shall be made under Item 202.203 Pavement Butt Joint.

2) Construct Butt Joints at all paved drives and entrances.

3) Where deemed necessary by the Resident, winter sand shall be removed from the edges of shoulders and placed in designated areas or disposed of. Payment will be made under the appropriate hourly rental items.

4) All non-guardrail inslopes shall be rototilled, or graded, if necessary, so that the slope does not exceed 3:1 from the edge of the shoulder break. Excess material will be placed in designated areas, or disposed of, as designated by the Resident. Payment will be made under appropriate contract items or hourly contract items.

5) All inslope and ditches in cut areas shall be regraded to 3:1, or flatter, as directed by the Resident.

6) All waste material not used on the project shall be disposed of off the project in waste areas approved by the Resident

7) Any damage to the slopes caused by the Contractor's equipment, personnel, or operation shall be repaired to the satisfaction of the Resident. All work, equipment and materials required to make repairs shall be at the Contractor's expense.

8) A 3 ft paved lip shall be placed at all gravel entrances, except woods and field entrances, unless otherwise directed by the Resident.

9) The Contractor shall place suitable existing or other material acceptable to the Resident on all pavement edges to allow no greater than a 1¼" drop off. The material shall be graded to match existing in-slope or as directed by the Resident. On pre-existing in-slopes that have a 1¼" or more drop off the contractor will be paid equipment rental (or some other means if listed in the construction notes) to back up the edge of pavement in these areas. Material needed for the pre-existing areas shall be described in the appropriate area of the construction notes along with the method of payment for this material. In all other areas this work shall be considered incidental to the Contract and no additional payment will be made. Pre-existing areas shall be determined by the Resident and reviewed with the contractor prior to any paving. Seed and Mulch will be paid for at the contract unit price.

10) Item # 411.10, Untreated Aggregate Surface Course, may also meet the gradation requirements of item # 204.20, Add Shoulder Aggregate.

11) Any necessary cleaning of existing pavement prior to paving shall be incidental to the related paving items.

## GENERAL NOTES

12) All existing paved shoulders and widenings to be resurfaced as directed by the Resident.

13) Shoulder shim shall taper to 0 inch at face of existing curb and guardrail.

14) No existing drainage shall be abandoned, removed or plugged without prior approval of the Resident.

15) 350 Flared Terminals shall be installed concurrently with the placement of each section of beam guardrail.

16) Guardrail which is removed and not reused on the project becomes property of the Contractor. Removal and disposal shall be incidental to the guardrail items.

17) Holes created by Guardrail removal will be filled and compacted with approved materials as directed by the Resident. Payment to be considered incidental to the guardrail items.

18) "Undetermined Locations" shall be determined by the Resident.

19) Stations referenced are approximate.

20) Grind transition tapers at Catch Basins under Item No. 202.203, Pavement Butt Joints, as directed by the Resident.

21) All work shall be done in accordance with the Maine Department of Transportation's Best Management Practices for Erosion Control & Sediment Control, January, 2000.

22) The Contractor will final stripe the project. The Contractor is responsible for transferring the existing striping pattern to the surface course.

# STATE OF MAINE
# DEPARTMENT OF TRANSPORTATION

## STP-1309(500)X

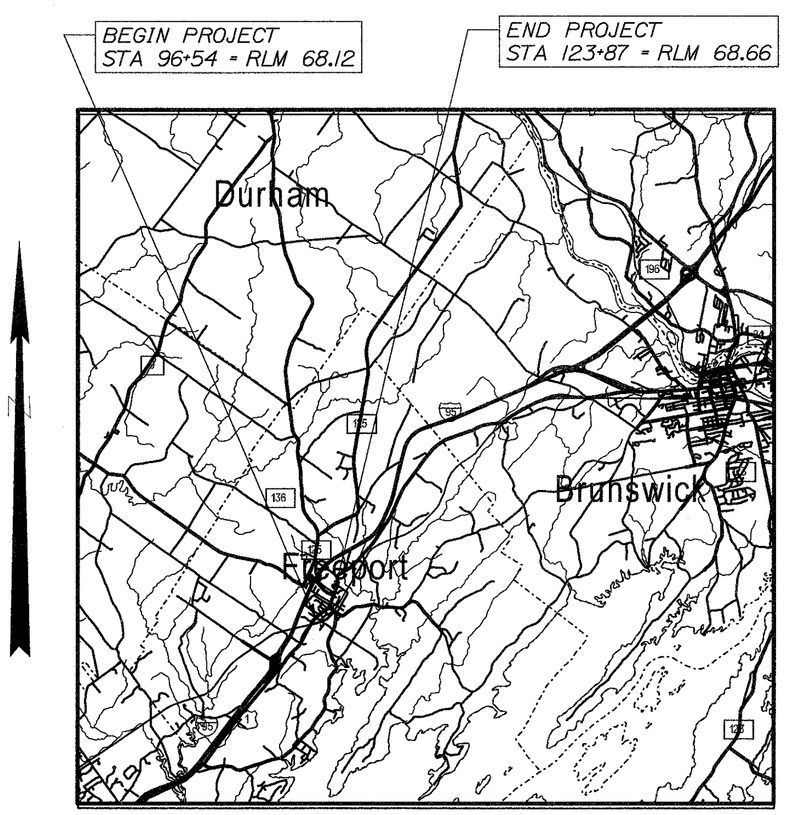


LOCATION MAP

2 0 2 4
Scale in Miles

# FREEPORT
## CUMBERLAND COUNTY
MAIN STREET
## STP-1309(500)X
PROJECT LENGTH : 0.54 mi.
PPM 3/4" HOT MIX ASPHALT OVERLAY

### TRAFFIC DATA

| | |
|---|---|
| Current (2006) AADT | 14740 |
| Future (2018) AADT | 16510 |
| DHV - % of AADT | 11% |
| Design Hour Volume | 1946 |
| % Heavy Trucks (AADT) | 6% |
| % Heavy Trucks (DHV) | 4% |
| Directional Distribution (DHV) | 60% |
| 18 kip Equivalent P 2.0 | 576 |
| 18 kip Equivalent P 2.5 | 549 |
| Design Speed (mph) | 25 |

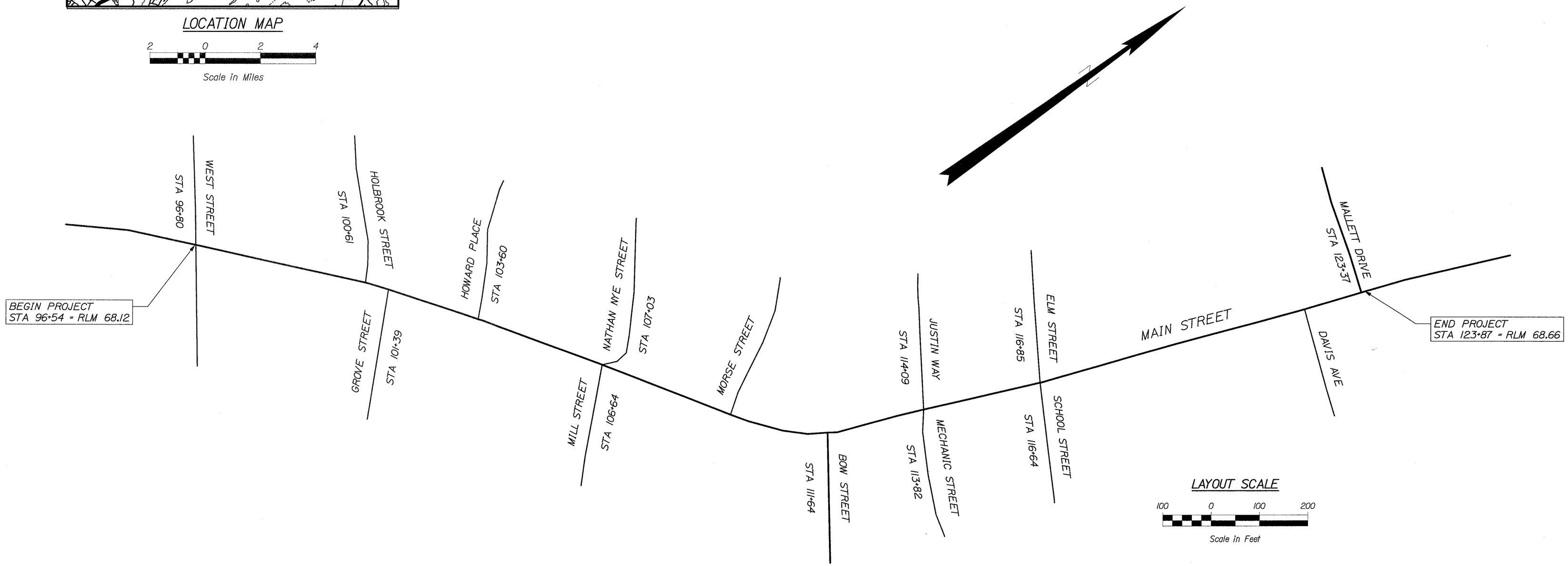


LAYOUT SCALE
100 0 100 200
Scale in Feet

PIN 13095.00

STP-1309(500)X

STATE OF MAINE
DEPARTMENT OF TRANSPORTATION
APPROVED
COMMISSIONER: DATE 6/14/06
CHIEF ENGINEER: DATE 06/14/06

STATE OF MAINE DEAN A. LESSARD #8225 REGISTERED PROFESSIONAL ENGINEER

SIGNATURE
8225
P.E. NUMBER
5/24/06
DATE

PROJECT INFORMATION

| | |
|---|---|
| PROGRAM | REGIONAL HIGHWAY PROGRAM |
| PROJECT MANAGER | DEAN LESSARD |
| DESIGNER | GILE COURTEMANCHE |
| CONSULTANT | |
| PROJECT RESIDENT | ANTHONY FONTAIN |
| CONTRACTOR | |
| PROJECT COMPLETION DATE | |

FREEPORT
MAIN STREET

TITLE SHEET

SHEET NUMBER
1
OF 1

Filename: ...\00\HIGHWAY\MSTA\001_Title.dgn Division: HIGHWAY Username: randy.jillian Date:5/23/2006

# 3/4 " Hot Mix Asphalt Overlay

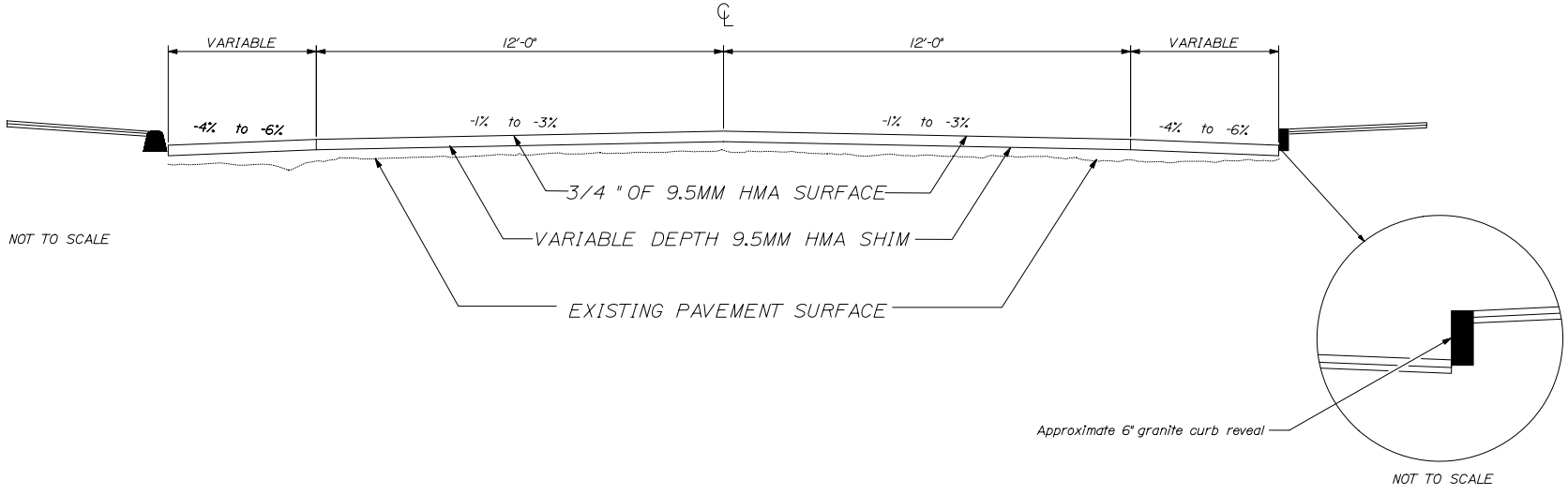


STATE OF MAINE
DEPARTMENT OF TRANSPORTATION

PIN 13095.00

HIGHWAY PLANS

| | | | |
|---|---|---|---|
| PROJ. MANAGER | DEAN LESSARD | BY | DATE |
| DESIGN-DETAILED | G COURTEMANCHE | | |
| CHECKED-REVIEWED | ------- | ------- | |
| DESIGN2-DETAILED2 | ------- | ------- | SIGNATURE |
| DESIGN3-DETAILED3 | ------- | ------- | |
| REVISIONS 1 | ------- | ------- | P.E. NUMBER |
| REVISIONS 2 | ------- | ------- | |
| REVISIONS 3 | ------- | ------- | |
| REVISIONS 4 | ------- | ------- | DATE |
| FIELD CHANGES | ------- | ------- | |

FREEPORT
MAIN STREET

TYPICAL SECTIONS

SHEET NUMBER

1

OF 1

Filename: $file$ Division: $wkgroup$ Username: $user$ Date:$date$

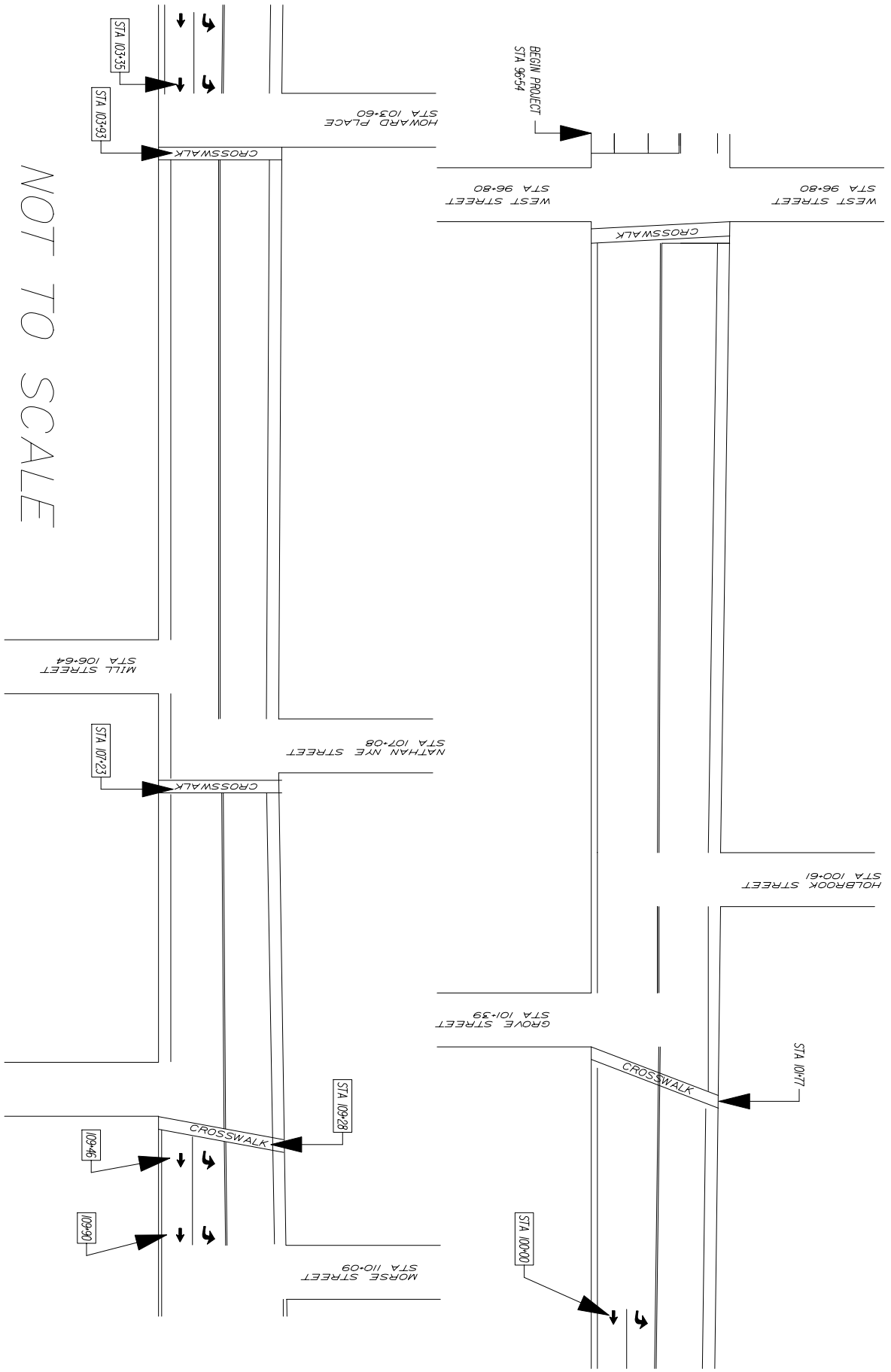


| | | | | | |
|---|---|---|---|---|---|
| SHEET NUMBER 1 OF 2 | FREEPORT MAIN STREET<br>STRIPING PLAN | PROJ. MANAGER DEAN LESSARD | BY | DATE | STATE OF MAINE<br>DEPARTMENT OF TRANSPORTATION |
| | | DESIGN-DETAILED | Gil Courtemanche | | |
| | | CHECKED-REVIEWED | | | SIGNATURE |
| | | DESIGN2-DETAILED2 | | | |
| | | DESIGN3-DETAILED3 | | | |
| | | REVISIONS 1 | | | P.E. NUMBER |
| | | REVISIONS 2 | | | |
| | | REVISIONS 3 | | | DATE |
| | | REVISIONS 4 | | | |
| | | FIELD CHANGES | | | |

PIN 13095.00 HIGHWAY PLANS

# PAVEMENT MARKING PLAN

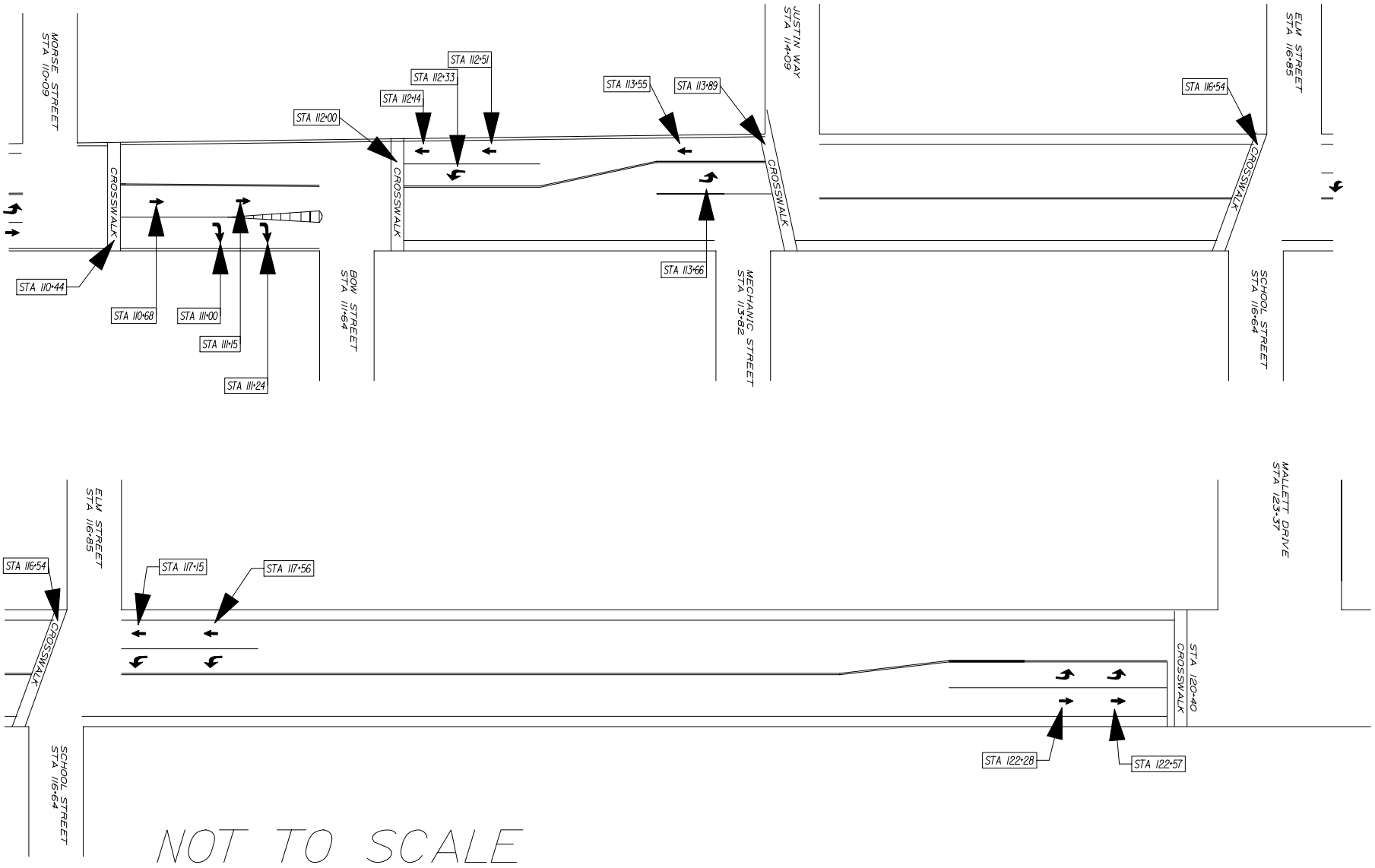


NOT TO SCALE

STATE OF MAINE
DEPARTMENT OF TRANSPORTATION

PIN 13086.00

HIGHWAY PLANS

| | | | |
|---|---|---|---|
| PROJ. MANAGER | DEAN LESSARD | BY | DATE |
| DESIGN-DETAILED | @Lucas Hamphrey | | |
| CHECKED-REVIEWED | | | |
| DESIGN2-DETAILED2 | | | SIGNATURE |
| DESIGN3-DETAILED3 | | | |
| REVISIONS 1 | | | P.E. NUMBER |
| REVISIONS 2 | | | |
| REVISIONS 3 | | | |
| REVISIONS 4 | | | DATE |
| FIELD CHANGES | | | |

FREEPORT
MAIN STREET

STRIPING PLAN

SHEET NUMBER
2
OF 2

Filename: $file$ Division: $wkgroup$ Username: $user$ Date:$date$

# Project Stationing

| Left Side | Station | Right Side |
|---|---|---|
| **End Project** | **123+87** | **End Project** |
| Mallett Dr. | 123+37 | |
| | 122+09 | CMP Pole 29 |
| | 119+40 | CMP Pole 25 |
| | 117+69 | CMP Pole 24 |
| Elm St. | 116+85 | |
| | 116+64 | School St. |
| Justin Way | 114+09 | |
| | 113+82 | Mechanic St. |
| | 111+64 | Bow St. |
| | 109+93 | CMP Pole 15 |
| | 107+66 | CMP Pole 12 |
| Nathan Nye St. | 107+08 | |
| | 106+64 | Mill St. |
| Howard Pl. | 103+60 | |
| | 103+07 | CMP Pole 79 |
| | 101+39 | Grove St. |
| Holbrook St. | 100+61 | |
| | 98+21 | CMP Pole 3 |
| West St. | 96+80 | West St. |
| **Begin Project** | **96+54** | **Begin Project** |

# Construction Notes

## 202.202 REMOVING PAVEMENT SURFACE

| Station | To | Station | Length(Ft) | Width(Ft) |
|---|---|---|---|---|
| 97+74 | | 99+74 | 200 | 8 |
| 99+24 | | 101+14 | 190 | 8 |
| 106+83 | | 107+33 | 50 | 8 |
| 109+94 | | 110+14 | 20 | 8 |
| 113+84 | | 114+04 | 20 | 16 |
| 122+99 | | 123+29 | 30 | 8 |

## 202.203 PAVEMENT BUTT JOINTS

| Description | Station |
|---|---|
| Begin Project | 96+54 |
| End Project | 123+87 |

| Description | Quantity |
|---|---|
| Paved Drives | 23 |
| Sideroads | 13 |
| Crosswalk | 14 |

## 304.10 AGGREGATE SUBBASE COURSE - GRAVEL

This item to be used, if needed, during repairs / rebuilding of catch basin, or as directed by the resident.

## 604.161 ALTERING CATCH BASIN

| Station | Side |
|---|---|
| 100+93 | LT |
| 112+66 | LT |
| 118+38 | LT |
| 118+49 | RT |
| 119+27 | RT |

# Construction Notes (cont.)

## 604.164 REBUILDING CATCH BASIN

| Station | Side |
|---|---|
| 110+08 | RT |
| 116+33 | RT |

## 604.18 ADJUSTING MANHOLE OR CATCH BASIN TO GRADE

| Station | Side |
|---|---|
| 101+67 | RT |
| 109+96 | LT |
| 111+31 | LT |
| 112+14 | LT |
| 116+33 | LT |
| 119+25 | LT |
| 122+81 | LT |
| 123+03 | RT |

## 627.75 WHITE OR YELLOW PAVEMENT & CURB MARKING

**12" Stop Bar**

| Station | Side |
|---|---|
| 96+78 | LT |
| 122+84 | RT |

**Crosswalk**

| Station | Side |
|---|---|
| 96+39 to 96+69 | LT |
| 96+74 | LT / RT |
| 101+77 | LT / RT |
| 103+93 | LT / RT |
| 107+23 | LT / RT |
| 109+28 | LT / RT |
| 110+44 | LT / RT |
| 112+00 | LT / RT |
| 113+89 | LT / RT |
| 122+84 | LT / RT |

Cross walks to be delineated by two parallel 4" lines only.

# Construction Notes (cont.)

## 627.75 WHITE OR YELLOW PAVEMENT & CURB MARKING (cont.)

**Arrows**

| Station | Side | Description |
|---|---|---|
| 103+00 | RT | Straight |
| 103+00 | RT | Turn |
| 103+35 | RT | Straight |
| 103+35 | RT | Turn |
| 109+46 | RT | Straight |
| 109+46 | RT | Turn |
| 109+90 | RT | Straight |
| 109+90 | RT | Turn |
| 110+68 | RT | Straight |
| 111+00 | RT | Turn |
| 111+15 | RT | Straight |
| 111+24 | RT | Turn |
| 112+14 | LT | Straight |
| 112+33 | LT | Turn |
| 112+51 | LT | Straight |
| 113+55 | RT | Straight |
| 113+66 | RT | Turn |
| 117+15 | LT | Straight |
| 117+15 | LT | Turn |
| 117+56 | LT | Straight |
| 117+56 | LT | Turn |
| 122+28 | RT | Straight |
| 122+28 | RT | Turn |
| 122+57 | RT | Straight |
| 122+57 | RT | Turn |

**Misc.**

| Station | to | Station | Side | Description |
|---|---|---|---|---|
| 110+93 | | 111+44 | RT | Hash marks |

## 627.77 REMOVE PAVEMENT MARKINGS

| Station | Side | Description |
|---|---|---|
| 96+74 | LT / RT | Crosswalk |
| 98+53 | LT / RT | Crosswalk |

# Construction Notes (cont.)

## 627.77 REMOVE PAVEMENT MARKINGS (cont.)

| Station | Side | Description |
|---|---|---|
| 101+77 | LT / RT | Crosswalk |
| 103+93 | LT / RT | Crosswalk |
| 105+57 | LT / RT | Crosswalk |
| 107+23 | LT / RT | Crosswalk |
| 109+28 | LT / RT | Crosswalk |
| 110+44 | LT / RT | Crosswalk |
| 112+00 | LT / RT | Crosswalk |
| 113+89 | LT / RT | Crosswalk |
| 120+12 | LT / RT | Crosswalk |
| 122+84 | LT / RT | Crosswalk |

## 629.05 HAND LABOR, STRAIGHT TIME
## 631.12 ALL PURPOSE EXCAVATOR (INCLUDING OPERATOR)
## 631.133 SKID STEER (INCLUDING OPERATOR)
## 631.172 TRUCK - LARGE (INCLUDING OPERATOR)

Above Items to be used as directed by the Resident.

## 656.75 TEMPORARY SOIL EROSION AND WATER POLLUTION CONTROL

Contractor shall prepare, submit, and implement a Soil Erosion and Water Pollution Control Plan, in accordance with the required documentation.

# GENERAL NOTES

1) All joints between existing and proposed hot bituminous pavement shall be butted. Payment shall be made under Item 202.203 Pavement Butt Joint.

2) Construct Butt Joints at all paved drives and entrances or as directed by the Resident.

3) All waste material not used on the project shall be disposed of off the project in waste areas approved by the Resident

4) Any damage caused by the Contractor's equipment, personnel, or operation shall be repaired to the satisfaction of the Resident. All work, equipment and materials required to make repairs shall be at the Contractor's expense.

5) Any necessary cleaning of existing pavement prior to paving shall be incidental to the related paving items.

6) All existing paved shoulders and widenings to be resurfaced as directed by the Resident.

7) Shoulder shim shall taper to 0 inch at face of existing curb and guardrail.

8) No existing drainage shall be abandoned, removed or plugged without prior approval of the Resident.

9) Existing culverts and catch basins will be cleaned as directed by the Resident under the appropriate Pay Items.

10) "Undetermined Locations" shall be determined by the Resident.

11) Stations referenced are approximate.

12) Grind transition tapers at Catch Basins under Item No. 202.203, Pavement Butt Joints, as directed by the Resident.

13) All work shall be done in accordance with the Maine Department of Transportation's Best Management Practices for Erosion Control & Sediment Control, January, 2000.

14) Contractor will final stripe the project. The Contractor is responsible for transferring the existing striping pattern to the surface course.

15) All millings shall become property of the MDOT, and shall be delivered and stockpiled at the Topsham maintenance camp. Payment for delivery and stockpiling will be incidental to Item 202.202. Stockpiling shall include all equipment, personnel and all other necessary incidentals required to construct stockpiles as per normal construction practices.

General Decision Number ME030003 06/13/2003 ME3

Superseded General Decision No. ME020003

State: Maine

Construction Type:
HIGHWAY

County(ies):
ANDROSCOGGIN CUMBERLAND

Highway Construction Projects Excluding Major Bridging (for example: bascule, suspension and spandrel arch bridges; those bridging waters presently navigating or to be navigable; and those involving marine construction in any degree); tunnels, building structures in rest area projects and railroad construction.

| Modification Number | Publication Date |
|---|---|
| 0 | 06/13/2003 |

COUNTY(ies):
ANDROSCOGGIN CUMBERLAND

SUME4025A 10/24/2000

| | Rates | Fringes |
|---|---|---|
| CARPENTERS | 11.30 | 1.95 |
| ELECTRICIANS | 17.90 | 2.30 |
| LABORERS | | |
| Flaggers | 6.00 | |
| Landscape | 7.99 | .72 |
| Unskilled | 8.69 | 1.08 |
| POWER EQUIPMENT OPERATORS | | |
| Backhoes | 12.39 | 2.00 |
| Bulldozers | 11.13 | 1.94 |
| Excavators | 11.24 | 1.31 |
| Loaders | 11.19 | 1.82 |
| Rollers | 10.16 | 1.56 |
| TRUCK DRIVERS | | |
| Dump | 9.02 | 1.39 |
| Two axle | 9.08 | 1.28 |

---

WELDERS - Receive rate prescribed for craft performing operation to which welding is incidental.

==========

Unlisted classifications needed for work not included within the scope of the classifications listed may be added after award only as provided in the labor standards contract clauses (29 CFR 5.5(a)(1)(ii)).

---

In the listing above, the "SU" designation means that rates listed under that identifier do not reflect collectively bargained wage and fringe benefit rates. Other designations

indicate unions whose rates have been determined to be prevailing.

WAGE DETERMINATION APPEALS PROCESS

1.) Has there been an initial decision in the matter? This can be:

* an existing published wage determination
* a survey underlying a wage determination

* a Wage and Hour Division letter setting forth a position on a wage determination matter
* a conformance (additional classification and rate) ruling

On survey related matters, initial contact, including requests for summaries of surveys, should be with the Wage and Hour Regional Office for the area in which the survey was conducted because those Regional Offices have responsibility for the Davis-Bacon survey program. If the response from this initial contact is not satisfactory, then the process described in 2.) and 3.) should be followed.

With regard to any other matter not yet ripe for the formal process described here, initial contact should be with the Branch of Construction Wage Determinations. Write to:

Branch of Construction Wage Determinations
Wage and Hour Division
U. S. Department of Labor
200 Constitution Avenue, N. W.
Washington, D. C. 20210

2.) If the answer to the question in 1.) is yes, then an interested party (those affected by the action) can request review and reconsideration from the Wage and Hour Administrator (See 29 CFR Part 1.8 and 29 CFR Part 7). Write to:

Wage and Hour Administrator
U.S. Department of Labor
200 Constitution Avenue, N. W.
Washington, D. C. 20210

The request should be accompanied by a full statement of the interested party's position and by any information (wage payment data, project description, area practice material, etc.) that the requestor considers relevant to the issue.

3.) If the decision of the Administrator is not favorable, an interested party may appeal directly to the Administrative Review Board (formerly the Wage Appeals Board). Write to:

Administrative Review Board
U. S. Department of Labor
200 Constitution Avenue, N. W.
Washington, D. C. 20210

4.) All decisions by the Administrative Review Board are final.

END OF GENERAL DECISION

Project No. STP-1284(100)X

**SPECIAL PROVISION 105**
**CONSTRUCTION AREA**

A Construction Area located in the **Town of Brunswick** has been established by the Maine Department of Transportation (MDOT) in accordance with provisions of 29-A § 2382 Maine Revised Statutes Annotated (MRSA).

(a) The section of highway under construction in Cumberland County, Project No. STP-1284(100)X is located on, Pleasant Street beginning at Route 1 and extending easterly 0.50 mi. to 0.14 mi east of Union Street.

Per 29-A § 2382 (7) MRSA, the MDOT may "*issue permits for stated periods of time for loads and equipment employed on public way construction projects, United States Government projects or construction of private ways, when within construction areas established by the Department of Transportation. The permit:*

*A. Must be procured from the municipal officers for a construction area within that municipality;*

*B. May require the contractor to be responsible for damage to ways used in the construction areas and may provide for:*

*(1) Withholding by the agency contracting the work of final payment under contract; or*

*(2) The furnishing of a bond by the contractor to guarantee suitable repair or payment of damages.*

*The suitability of repairs or the amount of damage is to be determined by the Department of Transportation on state-maintained ways and bridges, otherwise by the municipal officers;*

*C. May be granted by the Department of Transportation or by the state engineer in charge of the construction contract; and*

*D. For construction areas, carries no fee and does not come within the scope of this section."*

The Municipal Officers for the **Town of Brunswick** agreed that an Overlimit Permit will be issued to the Contractor for the purpose of using loads and equipment on municipal ways in excess of the limits as specified in 29-A MRSA, on the municipal ways as described in the "Construction Area".

As noted above, a bond may be required by the municipality, the exact amount of said bond to be determined prior to use of any municipal way. The MDOT will assist in determining the bond amount if requested by the municipality.

The maximum speed limits for trucks on any town way will be 25 mph (40 km per hour) unless a higher legal limit is specifically agreed upon in writing by the Municipal Officers concerned.

# STP-1284(100)X

BEGIN PROJECT
STA 00+00 = RLM 0.00

END PROJECT
STA 26+14 = RLM 0+52

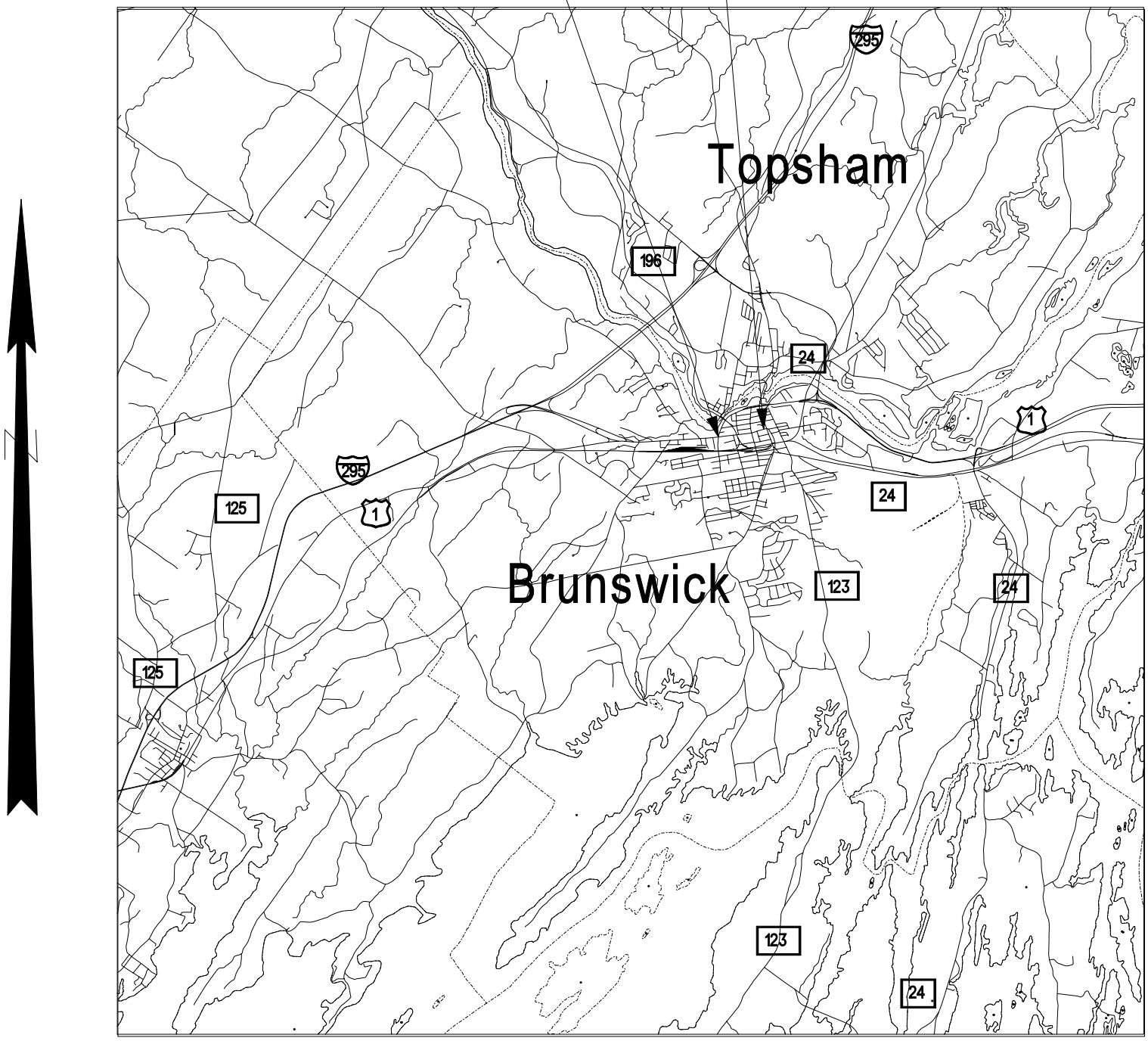


LOCATION MAP

Scale in Miles

Project No. STP-1290(800)X

**SPECIAL PROVISION 105**
**CONSTRUCTION AREA**

A Construction Area located in the **Town of Brunswick** has been established by the Maine Department of Transportation (MDOT) in accordance with provisions of 29-A § 2382 Maine Revised Statutes Annotated (MRSA).

(a) The section of highway under construction in Cumberland County, Project No. STP-1290(800)X is located on Route 1, beginning at Pleasant Street and extending northerly 0.50 mi. to Route 24.

Per 29-A § 2382 (7) MRSA, the MDOT may "*issue permits for stated periods of time for loads and equipment employed on public way construction projects, United States Government projects or construction of private ways, when within construction areas established by the Department of Transportation. The permit:*

*A. Must be procured from the municipal officers for a construction area within that municipality;*

*B. May require the contractor to be responsible for damage to ways used in the construction areas and may provide for:*

*(1) Withholding by the agency contracting the work of final payment under contract; or*

*(2) The furnishing of a bond by the contractor to guarantee suitable repair or payment of damages.*

*The suitability of repairs or the amount of damage is to be determined by the Department of Transportation on state-maintained ways and bridges, otherwise by the municipal officers;*

*C. May be granted by the Department of Transportation or by the state engineer in charge of the construction contract; and*

*D. For construction areas, carries no fee and does not come within the scope of this section."*

The Municipal Officers for the **Town of Brunswick** agreed that an Overlimit Permit will be issued to the Contractor for the purpose of using loads and equipment on municipal ways in excess of the limits as specified in 29-A MRSA, on the municipal ways as described in the "Construction Area".

As noted above, a bond may be required by the municipality, the exact amount of said bond to be determined prior to use of any municipal way. The MDOT will assist in determining the bond amount if requested by the municipality.

The maximum speed limits for trucks on any town way will be 25 mph (40 km per hour) unless a higher legal limit is specifically agreed upon in writing by the Municipal Officers concerned.

# NH-1290(800)E

BEGIN PROJECT STA 39+20 = RLM 76.50

END PROJECT STA 65+83 = RLM 77.00

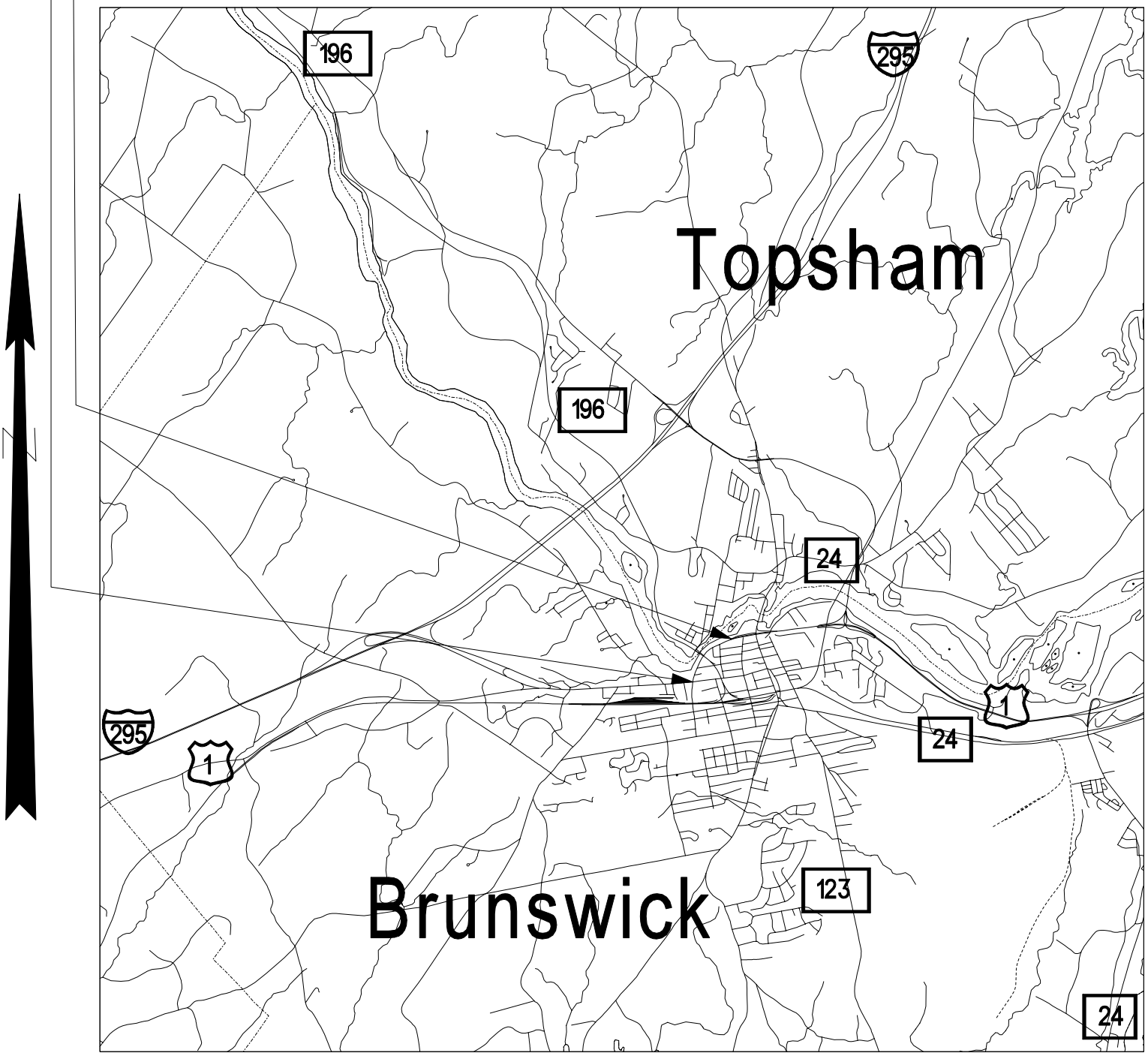


LOCATION MAP

Project No. STP-1309(400)X

**SPECIAL PROVISION 105**
**CONSTRUCTION AREA**

A Construction Area located in the **Town of Freeport** has been established by the Maine Department of Transportation (MDOT) in accordance with provisions of 29-A § 2382 Maine Revised Statutes Annotated (MRSA).

(a) The section of highway under construction in Cumberland County, Project No. STP-1309(400)X is located on Mallett Drive, beginning at Route 1 and extending northwesterly 0.58 mile.

Per 29-A § 2382 (7) MRSA, the MDOT may "*issue permits for stated periods of time for loads and equipment employed on public way construction projects, United States Government projects or construction of private ways, when within construction areas established by the Department of Transportation. The permit:*

*A. Must be procured from the municipal officers for a construction area within that municipality;*

*B. May require the contractor to be responsible for damage to ways used in the construction areas and may provide for:*

*(1) Withholding by the agency contracting the work of final payment under contract; or*

*(2) The furnishing of a bond by the contractor to guarantee suitable repair or payment of damages.*

*The suitability of repairs or the amount of damage is to be determined by the Department of Transportation on state-maintained ways and bridges, otherwise by the municipal officers;*

*C. May be granted by the Department of Transportation or by the state engineer in charge of the construction contract; and*

*D. For construction areas, carries no fee and does not come within the scope of this section."*

The Municipal Officers for the **Town of Freeport** agreed that an Overlimit Permit will be issued to the Contractor for the purpose of using loads and equipment on municipal ways in excess of the limits as specified in 29-A MRSA, on the municipal ways as described in the "Construction Area".

As noted above, a bond may be required by the municipality, the exact amount of said bond to be determined prior to use of any municipal way. The MDOT will assist in determining the bond amount if requested by the municipality.

The maximum speed limits for trucks on any town way will be 25 mph (40 km per hour) unless a higher legal limit is specifically agreed upon in writing by the Municipal Officers concerned.

# STP-1309(400)X

END PROJECT
STA 30+45 = RLM 0.58

BEGIN PROJECT
STA 0+00 = RLM 0.00

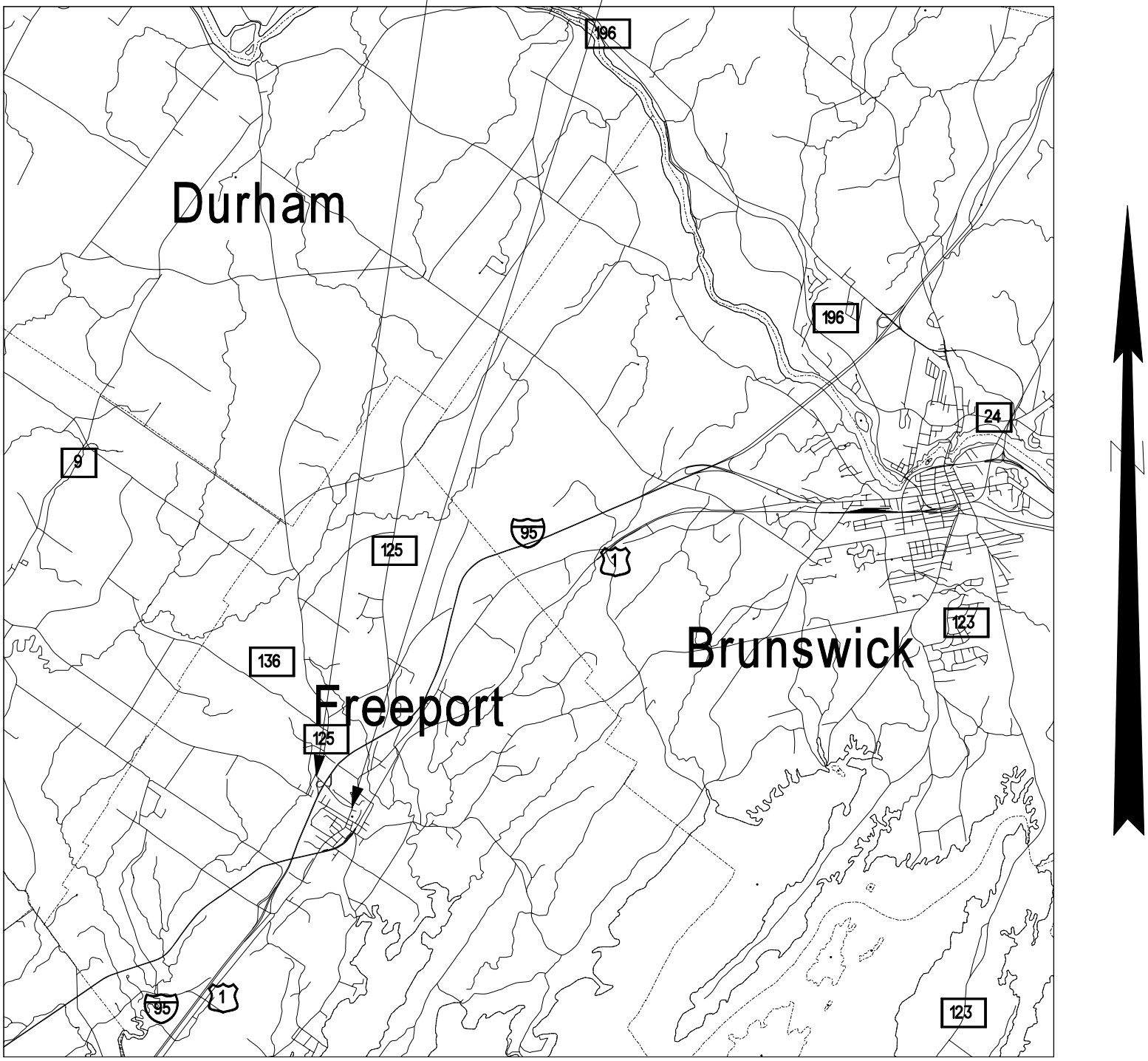


LOCATION MAP

2 0 2 4

Scale in Miles

Project No. STP-1309(500)X

**SPECIAL PROVISION 105**
**CONSTRUCTION AREA**

A Construction Area located in the **Town of Freeport** has been established by the Maine Department of Transportation (MDOT) in accordance with provisions of 29-A § 2382 Maine Revised Statutes Annotated (MRSA).

(a) The section of highway under construction in Cumberland County, Project No. STP-1309(500)X is located on Route 1, beginning at West Street and extending northerly 0.52 mile to Mallett Drive.

Per 29-A § 2382 (7) MRSA, the MDOT may "*issue permits for stated periods of time for loads and equipment employed on public way construction projects, United States Government projects or construction of private ways, when within construction areas established by the Department of Transportation. The permit:*

*A. Must be procured from the municipal officers for a construction area within that municipality;*

*B. May require the contractor to be responsible for damage to ways used in the construction areas and may provide for:*

*(1) Withholding by the agency contracting the work of final payment under contract; or*

*(2) The furnishing of a bond by the contractor to guarantee suitable repair or payment of damages.*

*The suitability of repairs or the amount of damage is to be determined by the Department of Transportation on state-maintained ways and bridges, otherwise by the municipal officers;*

*C. May be granted by the Department of Transportation or by the state engineer in charge of the construction contract; and*

*D. For construction areas, carries no fee and does not come within the scope of this section."*

The Municipal Officers for the **Town of Freeport** agreed that an Overlimit Permit will be issued to the Contractor for the purpose of using loads and equipment on municipal ways in excess of the limits as specified in 29-A MRSA, on the municipal ways as described in the "Construction Area".

As noted above, a bond may be required by the municipality, the exact amount of said bond to be determined prior to use of any municipal way. The MDOT will assist in determining the bond amount if requested by the municipality.

The maximum speed limits for trucks on any town way will be 25 mph (40 km per hour) unless a higher legal limit is specifically agreed upon in writing by the Municipal Officers concerned.

# STP-1309(500)X

BEGIN PROJECT
STA 96+54 = RLM 68.12

END PROJECT
STA 123+87 = RLM 68.66

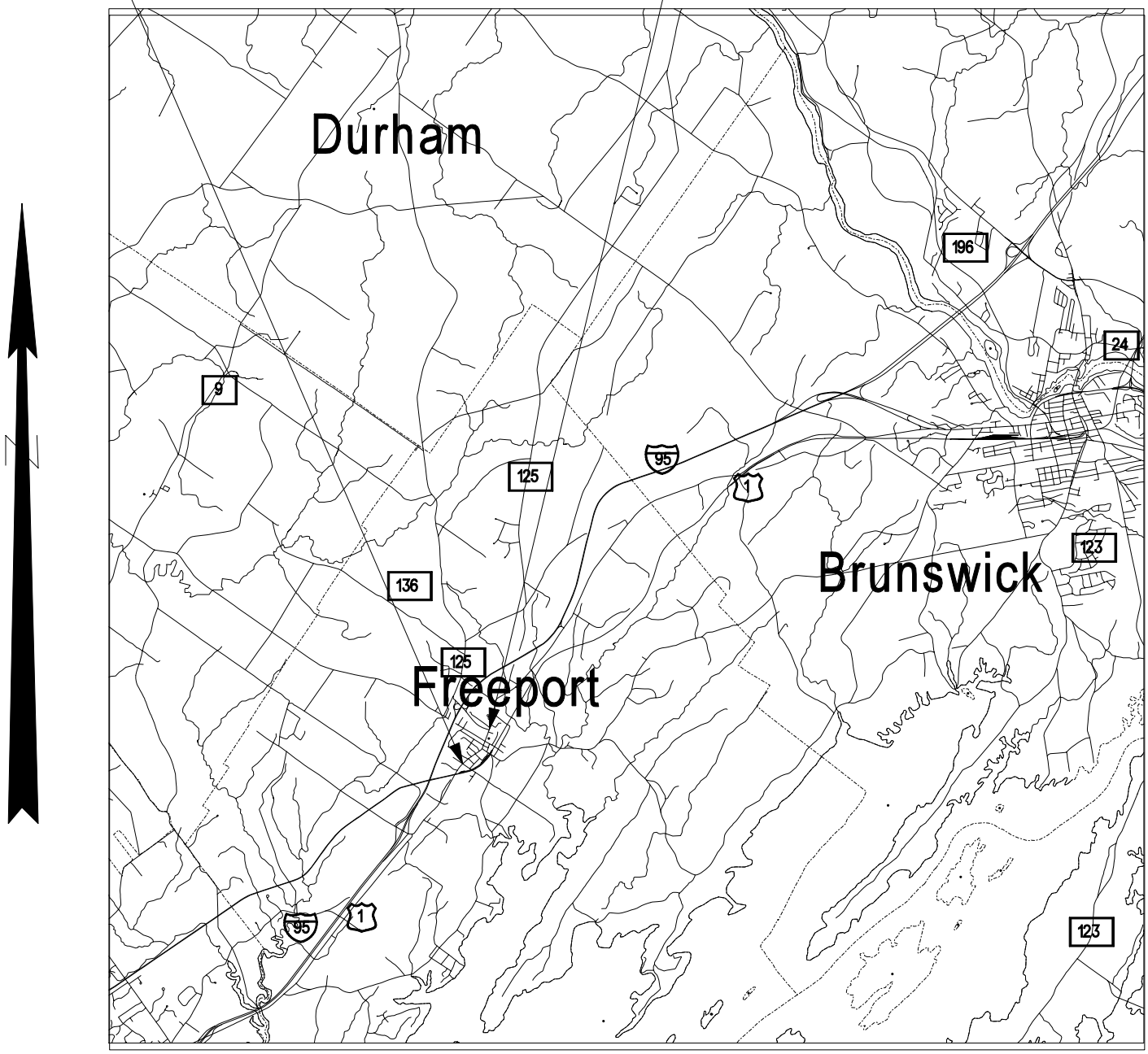


LOCATION MAP

2 0 2 4

Scale in Miles

December 10, 2004
Supercedes February 7, 1996

# SPECIAL PROVISION 105
# OVERLIMIT PERMITS

## Title 29-A § 2382 MRSA Overlimit Movement Permits.

**1. Overlimit movement permits issued by State.** The Secretary of State, acting under guidelines and advice of the Commissioner of Transportation, may grant permits to move nondivisible objects having a length, width, height or weight greater than specified in this Title over a way or bridge maintained by the Department of Transportation

**2. Permit fee.** The Secretary of State, with the advice of the Commissioner of Transportation, may set the fee for single trip permits, at not less than $6, nor more than $30, based on weight, height, length and width. The Secretary of State may, by rule, implement fees that have been set by the Commissioner of Transportation for multiple trip, long-term overweight movement permits. Rules established pursuant to this section are routine technical rules pursuant to Title 5, chapter 375, subchapter II-A.

**3. County and municipal permits.** A county commissioner or municipal officer may grant a permit, for a reasonable fee, for travel over a way or bridge maintained by that county or municipality

**4. Permits for weight.** A vehicle granted a permit for excess weight must first be registered for the maximum gross vehicle weight allowed for that vehicle.

**5. Special mobile equipment.** The Secretary of State may grant a permit, for no more than one year, to move pneumatic-tire equipment under its own power, including Class A and Class B special mobile equipment, over ways and bridges maintained by the Department of Transportation. The fee for that permit is $15 for each 30-day period.

**6. Scope of permit.** A permit is limited to the particular vehicle or object to be moved, the trailer or semitrailer hauling the overlimit object and particular ways and bridges.

**7. Construction permits.** A permit for a stated period of time may be issued for loads and equipment employed on public way construction projects, United States Government projects or construction of private ways, when within construction areas established by the Department of Transportation. The permit:

A. Must be procured from the municipal officers for a construction area within that municipality;

B. May require the contractor to be responsible for damage to ways used in the construction areas and may provide for:

(1) Withholding by the agency contracting the work of final payment under contract; or

(2) The furnishing of a bond by the contractor to guarantee suitable repair or payment of damages.

The suitability of repairs or the amount of damage is to be determined by the Department of Transportation on state-maintained ways and bridges, otherwise by the municipal officers;

C. May be granted by the Department of Transportation or by the state engineer in charge of the construction contract; and

D. For construction areas, carries no fee and does not come within the scope of this section.

**8. Gross vehicle weight permits.** The following may grant permits to operate a vehicle having a gross vehicle weight exceeding the prescribed limit:

A. The Secretary of State, with the consent of the Department of Transportation, for state and state aid highways and bridges within city or compact village limits;

B. Municipal officers, for all other ways and bridges within that city and compact village limits; and

C. The county commissioners, for county roads and bridges located in unorganized territory.

**9. Pilot vehicles.** The following restrictions apply to pilot vehicles.

A. Pilot vehicles required by a permit must be equipped with warning lights and signs as required by the Secretary of State with the advice of the Department of Transportation.

B. Warning lights may be operated and lettering on the signs may be visible on a pilot vehicle only while it is escorting a vehicle with a permit on a public way.

With the advice of the Commissioner of Transportation and the Chief of the State Police, the Secretary of State shall establish rules for the operation of pilot vehicles.

**9-A. Police escort.** A person may not operate a single vehicle or a combination of vehicles of 125 feet or more in length or 16 feet or more in width on a public way unless the vehicle or combination of vehicles is accompanied by a police escort. The Secretary of State, with the advice of the Commissioner of Transportation, may require a police escort for vehicles of lesser dimensions.

A. The Bureau of State Police shall establish a fee for state police escorts to defray the costs of providing a police escort. A county sheriff or municipal police department may establish a fee to defray the costs of providing police escorts.

B. The Bureau of State Police shall provide a police escort if a request is made by a permittee. A county sheriff or municipal police department may refuse a permittee's request for a police escort.

C. A vehicle or combination of vehicles for which a police escort is required must be accompanied by a state police escort when operating on the interstate highway system.

**10. Taxes paid.** A permit for a mobile home may not be granted unless the applicant provides reasonable assurance that all property taxes, sewage disposal charges and drain and sewer assessments applicable to the mobile home, including those for the current tax year, have been paid or that the mobile home is exempt from those taxes. A municipality may waive the requirement that those taxes be paid before the issuance of a permit if the mobile home is to be moved from one location in the municipality to another location in the same municipality for purposes not related to the sale of the mobile home.

**11. Violation.** A person who moves an object over the public way in violation of this section commits a traffic infraction.

Section History:
PL 1993, Ch. 683, §A2 (NEW).
PL 1993, Ch. 683, §B5 (AFF).
PL 1997, Ch. 144, §1,2 (AMD).
PL 1999, Ch. 117, §2 (AMD).
PL 1999, Ch. 125, §1 (AMD).
PL 1999, Ch. 580, §13 (AMD).
PL 2001, Ch. 671, §30 (AMD).
PL 2003, Ch. 166, §13 (AMD).
PL 2003, Ch. 452, §Q73,74 (AMD).
PL 2003, Ch. 452, §X2 (AFF).

June 5, 2006

# STANDARD DETAIL UPDATES

Standard Details and Standard Detail updates are available at:
http://www.maine.gov/mdot/contractor-consultant-information/ss_standard_details_updates.php

| Detail # | Description | Revision Date |
|---|---|---|
| 504(15) | Diaphragms | 12/30/02 |
| 507(04) | Steel Bridge Railing | 2/05/03 |
| 801(02) | Drives on Non-Sidewalk Sections | 4/04/03 |
| 526(33) | Concrete Transition Barrier | 8/18/03 |
| 645(06) | H-Beam Posts – Highway Signing | 7/21/04 |
| 645(09) | Installation of Type II Signs | 7/21/04 |
| 626(09) | Electrical Junction Box for Traffic Signals and Lighting | 2/25/05 |
| 604(01) | Catch Basins | 11/16/05 |
| 604(05) | Type “A” & “B” Catch Basin Tops | 11/16/05 |
| 604(06) | Type “C” Catch Basin Tops | 11/16/05 |
| 604(07) | Manhole Top “D” | 11/16/05 |
| 604(09) | Catch Basin Type “E” | 11/16/05 |
| 606(02) | Multiple Mailbox Support | 11/16/05 |
| 606(07) | Reflectorized Beam Guardrail Delineator Details | 11/16/05 |
| 609(06) | Vertical Bridge Curb | 11/16/05 |
| 504(23) | Hand-Hold Details | 12/08/05 |

# SUPPLEMENTAL SPECIFICATION

(Corrections, Additions, & Revisions to Standard Specifications - Revision of December 2002)

## SECTION 101
## CONTRACT INTERPRETATION

101.2 Definitions

Closeout Documentation Replace the sentence "A letter stating the amount….. DBE goals." with "DBE Goal Attainment Verification Form"

Add "Environmental Information Hazardous waste assessments, dredge material test results, boring logs, geophysical studies, and other records and reports of the environmental conditions. For a related provision, see Section 104.3.14 - Interpretation and Interpolation."

Add "Fabrication Engineer The Department's representative responsible for Quality Assurance of pre-fabricated products that are produced off-site."

Geotechnical Information Replace with the following: "Boring logs, soil reports, geotechnical design reports, ground penetrating radar evaluations, seismic refraction studies, and other records of subsurface conditions. For a related provision, see Section 104.3.14 - Interpretation and Interpolation."

## SECTION 102
## DELIVERY OF BIDS
(Location and Time)

102.7.1 Location and Time Add the following sentence "As a minimum, the Bidder will submit a Bid Package consisting of the Notice to Contractors, the completed Acknowledgement of Bid Amendments form, the completed Schedule of Items, 2 copies of the completed Agreement, Offer, & Award form, a Bid Bond or Bid Guarantee, and any other Certifications or Bid Requirements listed in the Bid Book."

## SECTION 103
## AWARD AND CONTRACTING

103.3.1 Notice and Information Gathering Change the first paragraph to read as follows: "After Bid Opening and as a condition for Award of a Contract, the Department may require an Apparent Successful Bidder to demonstrate to the Department's satisfaction that the Bidder is responsible and qualified to perform the Work."

## SECTION 104
## GENERAL RIGHTS AND RESPONSIBILITIES

104.3.14 Interpretation and Interpolation In the first sentence, change "…and Geotechnical Information." to "…Environmental Information, and Geotechnical Information."

Delete the entire Section 104.5.9 and replace with the following:

104.5.9 Landscape Subcontractors The Contractor shall retain only Landscape Subcontractors that are certified by the Department's Environmental Office Landscape Unit.

## SECTION 105
## GENERAL SCOPE OF WORK

Delete the entire Section 105.6 and replace with the following:

105.6.1 Department Provided Services The Department will provide the Contractor with the description and coordinates of vertical and horizontal control points, set by the Department, within the Project Limits, for full construction Projects and other Projects where survey control is necessary. For Projects of 1,500 feet in length, or less: The Department will provide three points. For Projects between 1,500 and 5,000 feet in length: The Department will provide one set of two points at each end of the Project. For Projects in excess of 5,000 feet in length, the Department will provide one set of two points at each end of the Project, plus one additional set of two points for each mile of Project length. For non-full construction Projects and other Projects where survey control is not necessary, the Department will not set any control points and, therefore, will not provide description and coordinates of any control points. Upon request of the Contractor, the Department will provide the Department's survey data management software and Survey Manual to the Contractor, or its survey Subcontractor, for the exclusive use on the Department's Projects.

105.6.2 Contractor Provided Services Utilizing the survey information and points provided by the Department, described in Subsection 105.6.1, Department Provided Services, the Contractor shall provide all additional survey layout necessary to complete the Work. This may include, but not be limited to, reestablishing all points provided by the Department, establishing additional control points, running axis lines, providing layout and maintenance of all other lines, grades, or points, and survey quality control to ensure conformance with the Contract. The Contractor is also responsible for providing construction centerline, or close reference points, for all Utility Facilities relocations and adjustments as necessary to complete the Work. When the Work is to connect with existing Structures, the Contractor shall verify all dimensions before proceeding with the Work. The Contractor shall employ or retain competent engineering and/or surveying personnel to fulfill these responsibilities.

The Contractor must notify the Department of any errors or inconsistencies regarding the data and layout provided by the Department as provided by Section 104.3.3 - Duty to Notify Department If Ambiguities Discovered.

105.6.2.1 Survey Quality Control The Contractor is responsible for all construction survey quality control. Construction survey quality control is generally defined as, first, performing initial field survey layout of the Work and, second, performing an independent check of the initial layout using independent survey data to assure the accuracy of the initial layout; additional iterations of checks may be required if significant discrepancies are discovered in this process. Construction survey layout quality control also requires written documentation of the layout process such that the process can be followed and repeated, if necessary, by an independent survey crew.

105.6.3 Survey Quality Assurance It is the Department's prerogative to perform construction survey quality assurance. Construction survey quality assurance may, or may not, be performed by the Department. Construction survey quality assurance is generally defined as an independent check of the construction survey quality control. The construction survey quality assurance process may involve physically checking the Contractor's construction survey layout using independent survey data, or may simply involve reviewing the construction survey quality control written documentation. If the Department elects to physically check the Contractor's survey layout, the Contractor's designated surveyor may be required to be present. The Department will provide a minimum notice of 48 hours to the Contractor, whenever possible, if the Contractor's designated surveyor's presence is required. Any errors discovered through the quality assurance process shall be corrected by the Contractor, at no additional cost to the Department.

105.6.4 Boundary Markers The Contractor shall preserve and protect from damage all monuments or other points that mark the boundaries of the Right-of-Way or abutting parcels that are outside the area that must be disturbed to perform the Work. The Contractor indemnifies and holds harmless the Department from all claims to reestablish the former location of all such monuments or points including claims arising from 14 MRSA § 7554-A. For a related provision, see Section 104.3.11 - Responsibility for Property of Others.

## SECTION 106
## QUALITY

106.6 Acceptance Add the following to paragraph 1 of A: "This includes Sections 401 - Hot Mix Asphalt, 402 - Pavement Smoothness, and 502 - Structural Concrete - Method A - Air Content."

Add the following to the beginning of paragraph 3 of A: "For pay factors based on Quality Level Analysis, and"

## SECTION 107
## TIME

107.3.1 General Add the following: "If a Holiday occurs on a Sunday, the following Monday shall be considered a Holiday. Sunday or Holiday work must be approved by the Department, except that the Contractor may work on Martin Luther King Day, President's Day, Patriot's Day, the Friday after Thanksgiving, and Columbus Day without the Department's approval."

107.7.2 Schedule of Liquidated Damages Replace the table of Liquidated Damages as follows:

| From More Than | Up to and Including | Amount of Liquidated Damages per Calendar Day |
|---|---|---|
| $0 | $100,000 | $100 |
| $100,000 | $300,000 | $200 |
| $300,000 | $500,000 | $400 |
| $500,000 | $1,000,000 | $575 |
| $1,000,000 | $2,000,000 | $750 |
| $2,000,000 | $4,000,000 | $900 |
| $4,000,000 | and more | $1,875 |

## SECTION 108

# PAYMENT

108.4 Payment for Materials Obtained and Stored First paragraph, second sentence, delete the words "…Delivered on or near the Work site at acceptable storage places."

# SECTION 109
# CHANGES

109.1.1 Changes Permitted Add the following to the end of the paragraph: "There will be no adjustment to Contract Time due to an increase or decrease in quantities, compared to those estimated, except as addressed through Contract Modification(s)."

109.1.2 Substantial Changes to Major Items Add the following to the end of the paragraph: "Contract Time adjustments may be made for substantial changes to Major Items when the change affects the Critical Path, as determined by the Department"

109.4.4 Investigation / Adjustment Third sentence, delete the words "subsections (A) - (E)"

109.5.1 Definitions - Types of Delays

B. Compensable Delay Replace (1) with the following; "a weather related Uncontrollable Event of such an unusually severe nature that a Federal Emergency Disaster is declared. The Contractor will only be entitled to an Equitable Adjustment if the Project falls within the geographic boundaries prescribed under the disaster declaration."

109.7.2 Basis of Payment Replace with the following: "Equitable Adjustments will be established by mutual Agreement for compensable items listed in Section 109.7.3-Compensable Items, based upon Unit or Lump Sum Prices. If Agreement cannot be reached, the Contractor shall accept payment on a Force Account basis as provided in Section 109.7.5 - Force Account Work, as full and complete compensation for all Work relating to the Equitable Adjustment."

109.7.3 Compensable Items Replace with the following: "The Contractor is entitled to compensation for the following items, with respect to agreed upon Unit or Lump Sum Prices:

1. Labor expenses for non-salaried Workers and salaried foremen.

2. Costs for Materials.

3. A 15 % markup on the totals of Items 1 and 2 of this subsection 109.7.3 for home office overhead and profit of the Contractor, its Subcontractors and suppliers, and any lower tier Subcontractors or suppliers, with no mark-ups on mark-ups.

4. Cost for Equipment, based on Blue Book Rates or leased rates, as set forth in Section 109.7.5(C), or the Contractor's Actual Costs if determined by the Department to be lower.
5. Costs for extended job-site overhead.

6. Time.

7. Subcontractor quoted Work, as set forth below in Section 109.7.5 (F)."

109.7.5 Force Account Work

C. Equipment

Paragraph 2, delete sentence 1 which starts; "Equipment leased…."

Paragraph 6, change sentence 2 from "The Contractor may furnish…" to read "If requested by the Department, the Contractor will produce cost data to assist the Department in the establishment of such rental rate, including all records that are relevant to the Actual Costs including rental Receipts, acquisition costs, financing documents, lease Agreements, and maintenance and operational cost records."
Add the following paragraph; "Equipment leased by the Contractor for Force Account Work and actually used on the Project will be paid for at the actual invoice amount plus 10% markup for administrative costs."

Add the following section;

"F. Subcontractor Quoted Work When accomplishing Force Account Work that utilizes Subcontractors, the Contractor will be allowed a maximum markup of 5% for profit and overhead on the Subcontractor's portion of the Force Account Work."

## SECTION 110
## INDEMNIFICATION, BONDING, AND INSURANCE

Delete the entire Section 110.2.3 and replace with the following:

110.2.3 Bonding for Landscape Establishment Period The Contractor shall provide a signed, valid, and enforceable Performance, Warranty, or Maintenance Bond complying with the Contract, to the Department at Final Acceptance.

The bond shall be in the full amount for all Pay Items for work pursuant to Sec 621, Landscape, payable to the "Treasurer - State of Maine," and on the Department's forms, on exact copies thereof, or on forms that do not contain any significant variations from the Department's forms as solely determined by the Department.

The Contractor shall pay all premiums and take all other actions necessary to keep said bond in effect for the duration of the Landscape Establishment Period described in Special Provision 621.0036 - Establishment Period. If the Surety becomes financially insolvent, ceases to be licensed or approved to do business in the State of Maine, or stops operating in the United States, the Contractor shall file new bonds complying with this Section within 10 Days of the date the Contractor is notified or becomes aware of such change.

All Bonds shall be procured from a company organized and operating in the United States, licensed or approved to do business in the State of Maine by the State of Maine Department of

Business Regulation, Bureau of Insurance, and listed on the latest Federal Department of the Treasury listing for "Companies Holding Certificates of Authority as Acceptable Sureties on Federal Bonds and as Acceptable Reinsuring Companies."

By issuing a bond, the Surety agrees to be bound by all terms of the Contract, including those related to payment, time for performance, quality, warranties, and the Department's self-help remedy provided in Section 112.1 - Default to the same extent as if all terms of the Contract are contained in the bond(s).

Regarding claims related to any obligations covered by the bond, the Surety shall provide, within 60 Days of Receipt of written notice thereof, full payment of the entire claim or written notice of all bases upon which it is denying or contesting payment. Failure of the Surety to provide such notice within the 60-day period constitutes the Surety's waiver of any right to deny or contest payment and the Surety's acknowledgment that the claim is valid and undisputed.

## SECTION 202
## REMOVING STRUCTURES AND OBSTRUCTIONS

202.02 Removing Buildings Make the following change to the last sentence in the final paragraph, change "…Code of Maine Regulations 401." to "…Department of Environmental Protection Maine Solid Waste Management Rules, 06-096 CMR Ch. 401, Landfill Siting, Design and Operation."

## SECTION 401
## HOT MIX ASPHALT PAVEMENT

401.18 Quality Control Method A & B Make the following change to paragraph a. QCP Administrator; in the final sentence, change "…certified as a Plant Technician or Paving Inspector…" to "…certified as a Quality Assurance Technologist…"

401.201 Method A Under a. Lot Size, add the following; "Each lot will be divided into a minimum of four sublots for mix properties and five sublots for percent TMD."

401.203 Method C Second paragraph, fourth sentence, change "…Method B and C Acceptance…" to "…Method B and C Acceptance Limits, Method C the Department will pay the contract unit price. If the test results for each 250 Mg [275 ton] increment are outside these limits, the following deductions (Table 7b) shall…"

## SECTION 402
## PAVEMENT SMOOTHNESS

Add the following: "Projects to have their pavement smoothness analyzed in accordance with this Specification will be so noted in Special Provision 403 - Bituminous Box."
"402.02 Lot Size Lot size for smoothness will be 1000 lane-meters [3000 lane-feet]. A sublot will consist of 20 lane-meters [50 lane-feet]. Partial lots will be included in the previous lot if

less than one-half the size of a normal lot. If greater than one-half the normal lot size, it will be tested as a separate lot."

## SECTION 502
## STRUCTURAL CONCRETE

502.05 Composition and Proportioning; TABLE #1; NOTE #2; third sentence; Change "…alcohol based saline sealer…" to "alcohol based silane sealer…". Add NOTE #6 to Class S Concrete.

502.0502 Quality Assurance Method A - Rejection by Resident Change the first sentence to read: "For an individual sublot with test results failing to meet the criteria in Table #1, or if the calculated pay factor for Air Content is less than 0.80……"

502.0503 Quality Assurance Method B - Rejection by Resident Change the first sentence to read: "For material represented by a verification test with test results failing to meet the criteria in Table #1, the Department will……"

502.0505 Resolution of Disputed Acceptance Test Results Combine the second and third sentence to read: "Circumstances may arise, however, where the Department may ……"
502.10 Forms and False work

D. Removal of Forms and False work 1., First paragraph; first, second, and third sentence; replace "forms" with "forms and false work"

502.11 Placing Concrete

G. Concrete Wearing Surface and Structural Slabs on Precast Superstructures Last paragraph; third sentence; replace "The temperature of the concrete shall not exceed 24° C [75° F} at the time of placement." with "The temperature of the concrete shall not exceed 24° C [75° F} at the time the concrete is placed in its final position."

502.15 Curing Concrete First paragraph; replace the first sentence with the following; "All concrete surfaces shall be kept wet with clean, fresh water for a curing period of at least 7 days after concrete placing, with the exception of vertical surfaces as provided for in Section 501.10 (D) - Removal of Forms and False work."

Second paragraph; delete the first two sentences.

Third paragraph; delete the entire paragraph which starts "When the ambient temperature…."

Fourth paragraph; delete "approved" to now read "…continuously wet for the entire curing period…"

Fifth paragraph; second sentence; change "…as soon as it is possible to do so without damaging the concrete surface." to "…as soon as possible."

Seventh paragraph; first sentence; change "…until the end of the curing period." to "…until the end of the curing period, except as provided for in Section 502.10(D) - Removal of Forms and False work."

502.19 Basis of Payment First paragraph, second sentence; add "pier nose armor" to the list of items included in the contract price for concrete.

## SECTION 503
## REINFORCING STEEL

503.06 Placing and Fastening Change the second paragraph, first sentence from: "All tack welding shall be done in accordance with Section 504, Structural Steel." to "All tack welding shall be done in accordance with AWS D1.4 Structural Welding Code - Reinforcing Steel."

## SECTION 504
## STRUCTURAL STEEL

504.09 Facilities for Inspection Add the follow as the last paragraph: "Failure to comply with the above requirements will be consider to be a denial to allow access to work by the Contractor. The Department will reject any work done when access for inspection is denied."

504.18 Plates for Fabricated Members Change the second paragraph, first sentence from: "…ASTM A 898/A 898 M…" to "…ASTM A 898/A 898 M or ASTM A 435/A 435 M as applicable and…"

504.31 Shop Assembly Add the following as the last sentence: "The minimum assembly length shall include bearing centerlines of at least two substructure units."

504.64 Non Destructive Testing-Ancillary Bridge Products and Support Structures Change the third paragraph, first sentence from "One hundred percent…" to "Twenty five percent…"

## SECTION 535
## PRECAST, PRESTRESSED CONCRETE SUPERSTRUCTURE

535.02 Materials Change "Steel Strand for Concrete Reinforcement" to "Steel Strand." Add the following to the beginning of the third paragraph; "Concrete shall be Class P conforming to the requirements in this section. 28 day compressive strength shall be as stated on the plans. Coarse aggregate…."

535.05 Inspection Facilities Add the follow as the last paragraph: "Failure to comply with the above requirements will be consider to be a denial to allow access to work by the Contractor. The Department will reject any work done when access for inspection is denied."

535.26 Lateral Post-Tensioning Replace the first paragraph; "A final tension…" with "Overstressing strands for setting losses cannot be accomplished for chuck to chuck lengths of 7.6 m [25 ft] and less. In such instances, refer to the Plans for all materials and methods.

Otherwise, post-tensioning shall be in accordance with PCI standards and shall provide the anchorage force noted in the Plans. The applied jacking force shall be no less than 100% of the design jacking force."

## SECTION 603
## PIPE CULVERTS AND STORM DRAINS

603.0311 Corrugated Polyethylene Pipe for Option III Replace the Minimum Mandrel Diameter Table with the following:

| Nominal Size US Customary (in) | Minimum Mandrel Diameter (in) | Nominal Size Metric (mm) | Minimum Mandrel Diameter (mm) |
|---|---|---|---|
| 12 | 11.23 | 300 | 280.73 |
| 15 | 14.04 | 375 | 350.91 |
| 18 | 16.84 | 450 | 421.09 |
| 24 | 22.46 | 600 | 561.45 |
| 30 | 28.07 | 750 | 701.81 |
| 36 | 33.69 | 900 | 842.18 |
| 42 | 39.30 | 1050 | 982.54 |
| 48 | 44.92 | 1200 | 1122.90 |

## SECTION 604
## MANHOLES, INLETS, AND CATCH BASINS

604.02 Materials Add the following:

| | |
|---|---|
| "Tops and Traps | 712.07 |
| Corrugated Metal Units | 712.08 |
| Catch Basin and Manhole Steps | 712.09" |

## SECTION 605
## UNDERDRAINS

605.05 Underdrain Outlets Make the following change:

In the first paragraph, second sentence, delete the words "metal pipe".

## SECTION 606
## GUARDRAIL

606.02 Materials Delete the entire paragraph which reads "The sole patented supplier of multiple mailbox…." and replace with "Acceptable multiple mailbox assemblies shall be listed on the Department's Approved Products List and shall be NCHRP 350 tested and approved."

Delete the entire paragraph which reads "Retroreflective beam guardrail delineators…." and replace with "Reflectorized sheeting for Guardrail Delineators shall meet the requirements of Section 719.01 - Reflective Sheeting. Delineators shall be fabricated from high-impact, ultraviolet and weather resistant thermoplastic.

606.09 Basis of Payment First paragraph; delete the second and third sentence in their entirety and replace with "Butterfly-type guardrail reflectorized delineators shall be mounted on all W-beam guardrail at an interval of every 10 posts [62.5 ft] on tangents sections and every 5 posts [31.25 ft] on curved sections as directed by the Resident. On divided highways, the delineators shall be yellow on the left hand side and silver/white on the right hand side. On two-way roadways, the delineators shall be silver/white on the right hand side. All delineators shall have retroreflective sheeting applied to only the traffic facing side. Reflectorized guardrail delineators will not be paid for directly, but will be considered incidental to the guardrail items."

## SECTION 609
## CURB

609.04 Bituminous Curb f., Delete the requirement "Color Natural (White)"

## SECTION 615
## LOAM

615.02 Materials Make the following change:

| Organic Content | Percent by Volume |
|---|---|
| Humus | "5% - 10%", as determined by Ignition Test |

## SECTION 618
## SEEDING

618.01 Description Change the first sentence to read as follows: "This work shall consist of furnishing and applying seed ….." Also remove ",and cellulose fiber mulch" from 618.01(a).
618.03 Rates of Application In 618.03(a), remove the last sentence and replace with the following: "These rates shall apply to Seeding Method 2, 3, and Crown Vetch."

In 618.03(c) "1.8 kg [4 lb]/unit." to "1.95 kg [4 lb]/unit."

618.09 Construction Method In 618.09(a) 1, sentence two, replace "100 mm [4 in]" with "25 mm [1 in] (Method 1 areas) and 50 mm [2 in] (Method 2 areas)"

618.15 Temporary Seeding Change the Pay Unit from Unit to Kg [lb].

## SECTION 620
## GEOTEXTILES

620.03 Placement Section (c)

Title: Replace "Non-woven" in title with "Erosion Control".

First Paragraph: Replace first word "Non-woven" with "Woven monofilament".

Second Paragraph: Replace second word "Non-woven" with "Erosion Control".

620.07 Shipment, Storage, Protection and Repair of Fabric Section (a)
Replace the second sentence with the following: "Damaged geotextiles, as identified by the Resident, shall be repaired immediately."

620.09 Basis of Payment
Pay Item 620.58: Replace "Non-woven" with "Erosion Control"
Pay Item 620.59: Replace "Non-woven" with "Erosion Control"

## SECTION 621
## LANDSCAPING

621.0036 Establishment Period In paragraph 4 and 5, change "time of Final Acceptance" to "end of the period of establishment". In Paragraph 7, change "Final Acceptance date" to ""end of the period of establishment" and change "date of Final Acceptance" to "end of the period of establishment".

## SECTION 626
## HIGHWAY SIGNING

626.034 Concrete Foundations Add to the following to the end of the second paragraph: "Pre-cast and cast-in-place foundations shall be warranteed against leaning and corrosion for two years after the project is completed. If the lean is greater than 2 degrees from normal or the foundation is spalling within the first two years, the Contractor shall replace the foundation at no extra cost."

## SECTION 627
## PAVEMENT MARKINGS

627.10 Basis of Payment Add to the following to the end of the third paragraph: "If allowed by Special Provision, the Contractor may utilize Temporary Bi-Directional Yellow and White(As required) Delineators as temporary pavement marking lines and paid for at the contract lump sum price. Such payment will include as many applications as required and removal."

## SECTION 637
## DUST CONTROL

637.06 Basis of Payment Add the following after the second sentence of the third paragraph: "Failure by the Contractor to follow Standard Specification or Special Provision - Section 637 and/or the Contractor's own Soil Erosion and Pollution Control Plan concerning Dust Control and/or the Contractor's own Traffic Control Plan concerning Dust Control and/or visible evidence of excessive dust problems, as determined by the Resident, will result in a reduction in payment, computed by reducing the Lump Sum Total by 5% per occurrence per day. The Department's Resident or any other representative of the Department reserves the right to suspend the work at any time and request a meeting to discuss violations and remedies. The

Department shall not be held responsible for any delay in the work due to any suspension under this item. Additional penalties may also be assessed in accordance with Special Provision 652 - Work Zone Traffic Control and Standard Specification 656 - Temporary Soil Erosion and Water Pollution Control."

## SECTION 639
## ENGINEERING FACILITIES

639.04 Field Offices Change the forth to last paragraph from: "The Contractor shall provide a fully functional desktop copier…" to "….desktop copier/scanner…"

## SECTION 652
## MAINTENANCE OF TRAFFIC

652.2.3 Flashing Arrow Board Delete the existing 5 paragraphs and replace with the following: Flashing Arrow Panels (FAP) must be of a type that has been submitted to AASHTO's National Transportation Product Evaluation Program (NTPEP) for evaluation and placed on the Maine Department of Transportations' Approved Products List of Portable Changeable Message Signs & Flashing Arrow Panels.

FAP units shall meet requirements of the current Manual on Uniform Traffic Control Devices (MUTCD) for Type "C" panels as described in Section 6F.56 - Temporary Traffic Control Devices. An FAP shall have matrix of a minimum of 15 low-glare, sealed beam, Par 46 elements capable of either flashing or sequential displays as well as the various operating modes as described in the MUTCD, Chapter 6-F. If an FAP consisting of a bulb matrix is used, each element should be recess-mounted or equipped with an upper hood of not less than 180 degrees. The color presented by the elements shall be yellow.

FAP elements shall be capable of at least a 50 percent dimming from full brilliance. Full brilliance should be used for daytime operation and the dimmed mode shall be used for nighttime operation. FAP shall be at least 2.4 M x 1.2 M [96" x 48"] and finished in non-reflective black. The FAP shall be interpretable for a distance not less than 1.6 km [1 mile].

Operating modes shall include, flashing arrow, sequential arrow, sequential chevron, flashing double arrow, and flashing caution. In the three arrow signals, the second light from the arrow point shall not operate.

The minimum element on-time shall be 50 percent for the flashing mode, with equal intervals of 25 percent for each sequential phase. The flashing rate shall be not less than 25 nor more than 40 flashes per minute. All on-board circuitry shall be solid state.

Primary power source shall be 12 volt solar with a battery back-up to provide continuous operation when failure of the primary power source occurs, up to 30 days with fully charged batteries. Batteries must be capable of being charged from an onboard 110 volt AC power source and the unit shall be equipped with a cable for this purpose.

Controller and battery compartments shall be enclosed in lockable, weather-tight boxes.
The FAP shall be mounted on a pneumatic-tired trailer or other suitable support for hauling to

various locations, as directed. The minimum mounting height of an arrow panel should be 2.1 M [7 feet] from the roadway to the bottom of the panel.

The face of the trailer shall be delineated on a permanent basis by affixing retro-reflective material, known as conspicuity material, in a continuous line as seen by oncoming drivers.

A portable changeable message sign may be used to simulate an arrow panel display."

652.2.4 Other Devices Delete the last paragraph and add the following:
"652.2.5 Portable Changeable Message Sign Trailer mounted Portable Changeable Message Signs (PCMS) must be of a type that has been submitted to AASHTO's National Transportation Product Evaluation Program (NTPEP) for evaluation and placed on the Maine Department of Transportations' Approved Products List of Portable Changeable Message Signs & Flashing Arrow Panels. The PCMS unit shall meet or exceed the current specifications of the Manual on Uniform Traffic Control Devices (MUTCD), 6F.55.

The front face of the sign should be covered with a low-glare protective material. The color of the LED elements shall be amber on a black background. The PCMS should be visible from a distance of 0.8 km [0.5 mile] day and night and have a minimum 15º viewing angle. Characters must be legible from a distance of at least 200 M [650 feet].

The message panel should have adjustable display rates (minimum of 3 seconds per phase), so that the entire message can be read at least twice at the posted speed, the off-peak 85th-percentile speed prior to work starting, or the anticipated operating speed. Each message shall consist of either one or two phases. A phase shall consist of up to eight characters per line. The unit must be capable of displaying at least three lines of text with eight characters per line. Each character shall be 457 mm [18"] high. Each character module shall use at least a five wide and seven high pixel matrix. The text of the messages shall not scroll or travel horizontally or vertically across the face of the sign.

Units shall automatically adjust their brightness under varying light conditions to maintain legibility.

The control system shall include a display screen upon which messages can be reviewed before being displayed on the message sign. The control system shall be capable of maintaining memory when power is unavailable. Message must be changeable with either a notebook computer or an on-board keypad. The controller shall have the capability to store a minimum of 200 user-defined and 200 pre-programmed messages. Controller and battery compartments shall be enclosed in lockable, weather-tight boxes.

PCMS units shall have the capability of being made programmable by means of wireless communications. PCMS units shall also be fully capable of having an on-board radar system installed if required for a particular application.

PCMS' primary power source shall be solar with a battery back-up to provide continuous operation when failure of the primary power source occurs. Batteries must be capable of being

charged from a 110 volt AC power source. The unit must also be capable of being operated solely from a 110 volt AC power source and be equipped with a cable for this purpose.

The PCMS shall be mounted on a trailer in such a way that the bottom of the message sign panel shall be a minimum of 2.1 M [7 ft] above the roadway in urban areas and 1.5 M [5 ft] above the roadway in rural areas when it is in the operating mode. PCMS trailers should be of a heavy duty type with a 51 mm [2"] ball hitch and a minimum of four leveling jacks (at each corner). The sign shall be capable of being rotated 360° relative to the trailer. The face of the trailer shall be delineated on a permanent basis by affixing retro-reflective material, known as conspicuity material, in a continuous line as seen by oncoming drivers."
652.3.3 Submittal of Traffic Control Plan In item e. change "A list of all certified flaggers…" to "A list of all the Contractor's certified flaggers…"

In the last paragraph add the following as the second sentence: "The Department will review and provide comments to the Contractor within 14 days of receipt of the TCP."

652.3.5 Installation of Traffic Control Devices In the first paragraph, first sentence; change "Signs shall be erected…" to "Portable signs shall be erected.." In the third sentence; change "Signs must be erected so that the sign face…" to "Post-mounted signs must also be erected so that the sign face…"

652.4 Flaggers Replace the first paragraph with the following; "The Contractor shall furnish flaggers as required by the TCP or as otherwise specified by the Resident. All flaggers must have successfully completed a flagger test approved by the Department and administered by a Department-approved Flagger-Certifier who is employing that flagger. All flaggers must carry an official certification card with them while flagging that has been issued by their employer. Flaggers shall wear safety apparel meeting ANSI 107-1999 Class 2 risk exposure and clearly identify the wearer as a person, shall be visible at a minimum distance of 300 m [1000 ft], and shall wear a hardhat with retroreflectivity. For nighttime conditions, Class 3 apparel should be considered, retroreflective or flashing SLOW/STOP paddles shall be used, and except in emergency situations the flagger station shall be illuminated to assure visibility."

Second paragraph, first sentence; change "…have sufficient distance to stop before entering the workspace." to "…have sufficient distance to stop at the intended stopping point." Third sentence; change "At a spot obstruction…" to "At a spot obstruction with adequate sight distance,…"

Fourth paragraph, delete and replace with "Flaggers shall be provided as a minimum, a 10 minute break, every 2 hours and a 30 minute or longer lunch period away from the work station. Flaggers may only receive 1 unpaid break per day; all other breaks must be paid. Sufficient certified flaggers shall be available onsite to provide for continuous flagging operations during break periods. Breaker flaggers will not be paid for separately, but shall be considered incidental to the appropriate pay item."

652.8.2 Other Items Replace the last paragraph with the following: "There will be no payment made under any 652 pay items after the expiration of the adjusted total contract time."

## SECTION 653
## POLYSTYRENE PLASTIC INSULATION

653.05 Placing Backfill In the second sentence; change "…shall be not less than 150 mm [6 in] loose measure." to "…shall be not less than 250 mm [10 in] loose measure." In the third sentence; change "…crawler type bulldozer of not more than 390 kg/m$^2$ [80 lb/ft$^2$] ground contact pressure…" to "…crawler type bulldozer of not more than 4875 kg/m$^2$ [2000 lb/ft$^2$] ground contact pressure…"

653.06 Compaction In the last sentence; change "…not more than 390 kg/m$^2$ [80 lb/ft$^2$] ground contact…" to "…not more than 4875 kg/m$^2$ [2000 lb/ft$^2$] ground contact…"

## SECTION 656
## TEMPORARY SOIL EROSION AND WATER POLLUTION CONTROL

656.5.1 If Pay Item 656.75 Provided Replace the second paragraph with the following: "Failure by the Contractor to follow Standard Specification or Special Provision - Section 656 and/or the Contractor's own Soil Erosion and Pollution Control Plan will result in a reduction in payment, computed by reducing the Lump Sum Total by 5% per occurrence per day. The Department's Resident or any other representative of the Department reserves the right to suspend the work at any time and request a meeting to discuss violations and remedies. The Department shall not be held responsible for any delay in the work due to any suspension under this item."

## SECTION 701
## STRUCTURAL CONCRETE RELATED MATERIALS

701.10 Fly Ash - Chemical Requirements Change all references from "ASTM C311" to "ASTM C114".

## SECTION 703
## AGGREGATES

703.05 Aggregate for Sand Leveling Change the percent passing the 9.5 mm [3/8 in] sieve from "85 – 10" to "85 – 100"

703.06 Aggregate for Base and Subbase Delete the first paragraph: "The material shall have…" and replace with "The material shall have a minimum degradation value of 15 as determined by Washington State DOT Test Method T113, Method of Test for Determination of Degradation Value (March 2002 version), except that the reported degradation value will be the result of testing a single specimen from that portion of a sample that passes the 12.5 mm [½ in] sieve and is retained on the 2.00 mm [No. 10] sieve, minus any reclaimed asphalt pavement used."

703.07 Aggregates for HMA Pavements Delete the forth paragraph: "The composite blend shall have…" and replace with "The composite blend, minus any reclaimed asphalt pavement used, shall have a Micro-Deval value of 18.0 or less as determined by AASHTO T 327. In the event the material exceeds the Micro Deval limit, a Washington Degradation test shall be performed. The material shall be acceptable if it has a value of 30 or more as determined by Washington State DOT Test Method T 113, Method of Test for Determination of Degradation

Value (March 2002 version) except that the reported degradation value will be the result of testing a single composite specimen from that portion of the sample that passes the 12.5mm [1/2 inch] sieve and is retained on the 2.00mm [No 10] sieve, minus any reclaimed asphalt pavement used."

703.18 Common Borrow Replace the first paragraph with the following: "Common borrow shall consist of earth, suitable for embankment construction. It shall be free from frozen material, perishable rubbish, peat, and other unsuitable material including material currently or previously contaminated by chemical, radiological, or biological agents unless the material is from a DOT project and authorized by DEP for use."

703.22 Underdrain Backfill Material Change the first paragraph from "…for Underdrain Type B…" to "…for Underdrain Type B and C…"

## SECTION 706
## NON-METALLIC PIPE

706.06 Corrugated Polyethylene Pipe for Underdrain, Option I and Option III Culvert Pipe Change the first sentence from "…300 mm diameters to 900 mm" to "…300 mm diameters to 1200 mm" Delete, in it's entirety, the last sentence which begins "This pipe and resins…" and replace with the following; "The manufacturing plants of polyethylene pipe shall be certified by the Eastern States Consortium. Polyethylene pipe shall be accepted based on third party certification by the AASHTO's National Transportation Product Evaluation Program."

## SECTION 709
## REINFORCING STEEL AND WELDED STEEL WIRE FABIC

709.03 Steel Strand Change the second paragraph from "…shall be 12mm [½ inch] AASHTO M203M/M203 (ASTM A416/A416M)…" to "…shall be 15.24 mm [0.600 inch] diameter AASHTO M203 (ASTM A416)…"

## SECTION 710
## FENCE AND GUARDRAIL

710.03 Chain Link Fabric Add the following sentence: "Chain Link fabric for PVC coated shall conform to the requirements of AASHTO M181, Type IV-Class B."

710.07 Guardrail Posts Section b. change "…AASHTO M183/M183M…" to "…AASHTO M 270M/M 270 Grade 250 (36)…"

## SECTION 712
## MISCELLANEOUS HIGHWAY MATERIALS

712.06 Precast Concrete Units In the first paragraph, change "…ASTM C478M…" to "…AASHTO M199…" Delete the second paragraph and replace with the following; "Approved structural fibers may be used as a replacement of 6 x 6 #10 gauge welded wire fabric when used at an approved dosage rate for the construction of manhole and catch basin units. The material used shall be one of the products listed on the Maine Department of

Transportation's Approved Product List of Structural Fiber Reinforcement." Delete the fifth paragraph and replace with the following; "The concrete mix design shall be approved by the Department. Concrete shall contain 6% air content, plus or minus 1½% tolerance when tested according to AASHTO T152. All concrete shall develop a minimum compressive strength of 28 MPa [4000 psi] in 28 days when tested according to AASHTO T22. The absorption of a specimen, when tested according to AASHTO T280, Test Method "A", shall not exceed nine percent of the dry mass."

Add the following:

"712.07 Tops, and Traps These metal units shall conform to the plan dimensions and to the following specification requirements for the designated materials.

Gray iron or ductile iron castings shall conform to the requirements of AASHTO M306 unless otherwise designated.

712.08 Corrugated Metal Units The units shall conform to plan dimensions and the metal to AASHTO M36/M36M. Bituminous coating, when specified, shall conform to AASHTO M190 Type A.

712.09 Catch Basin and Manhole Steps Steps for catch basins and for manholes shall conform to ASTM C478M [ASTM C478], Section 13 for either of the following material:

(a) Aluminum steps-ASTM B221M, [ASTM B211] Alloy 6061-T6 or 6005-T5.

(b) Reinforced plastic steps Steel reinforcing bar with injection molded plastic coating copolymer polypropylene. Polypropylene shall conform to ASTM D 4101.

712.23 Flashing Lights Flashing Lights shall be power operated or battery operated as specified.

(a) Power operated flashing lights shall consist of housing, adapters, lamps, sockets, reflectors, lens, hoods and other necessary equipment designed to give clearly visible signal indications within an angle of at least 45 degrees and from 3 to 90 m [10 to 300 ft] under all light and atmospheric conditions.

Two circuit flasher controllers with a two-circuit filter capable of providing alternate flashing operations at the rate of not less than 50 nor more than 60 flashes per minute shall be provided.

The lamps shall be 650 lumens, 120 volt traffic signal lamps with sockets constructed to properly focus and hold the lamp firmly in position.
The housing shall have a rotatable sun visor not less than 175 mm [7 in] in length designed to shield the lens.

Reflectors shall be of such design that light from a properly focused lamp will reflect the light rays parallel. Reflectors shall have a maximum diameter at the point of contact with the lens of approximately 200 mm [8 in].

The lens shall consist of a round one-piece convex amber material which, when mounted, shall have a visible diameter of approximately 200 mm [8 in]. They shall distribute light and not diffuse it. The distribution of the light shall be asymmetrical in a downward direction. The light distribution of the lens shall not be uniform, but shall consist of a small high intensity portion with narrow distribution for long distance throw and a larger low intensity portion with wide distribution for short distance throw. Lenses shall be marked to indicate the top and bottom of the lens.

(b) Battery operated flashing lights shall be self- illuminated by an electric lamp behind the lens. These lights shall also be externally illuminated by reflex-reflective elements built into the lens to enable it to be seen by reflex-reflection of the light from the headlights of oncoming traffic. The batteries must be entirely enclosed in a case. A locking device must secure the case. The light shall have a flash rate of not less than 50 nor more than 60 flashes per minute from minus 30 °C [minus 20 °F] to plus 65 °C [plus 150 °F]. The light shall have an on time of not less than 10 percent of the flash cycle. The light beam projected upon a surface perpendicular to the axis of the light beam shall produce a lighted rectangular projection whose minimum horizontal dimension shall be 5 degrees each side of the horizontal axis. The effective intensity shall not have an initial value greater than 15.0 candelas or drop below 4.0 candelas during the first 336 hours of continuous flashing. The illuminated lens shall appear to be uniformly bright over its entire illuminated surface when viewed from any point within an angle of 9 degrees each side of the vertical axis and 5 degrees each side of the horizontal axis. The lens shall not be less than 175 mm [7 in] in diameter including a reflex-reflector ring of 13 mm [½ in] minimum width around the periphery. The lens shall be yellow in color and have a minimum relative luminous transmittance of 0.440 with a luminance of 2854° Kelvin. The lens shall be one-piece construction. The lens material shall be plastic and meet the luminous transmission requirements of this specification. The case containing the batteries and circuitry shall be constructed of a material capable of withstanding abuse equal to or greater than 1.21 mm thick steel [No. 18 U.S. Standard Gage Steel]. The housing and the lens frame, if of metal shall be properly cleaned, degreased and pretreated to promote adhesion. It shall be given one or more coats of enamel which, when dry shall completely obscure the metal. The enamel coating shall be of such quality that when the coated case is struck a light blow with a sharp tool, the paint will not chip or crack and if scratched with a knife will not powder. The case shall be so constructed and closed as to exclude moisture that would affect the proper operation of light. The case shall have a weep hole to allow the escape of moisture from condensation. Photoelectric controls, if provided, shall keep the light operating whenever the ambient light falls below 215 lx [20 foot candles]. Each light shall be plainly marked as to the manufacturer's name and model number.

If required by the Resident, certification as to conformance to these specifications shall be furnished based on results of tests made by an independent testing laboratory. All lights are subject to random inspection and testing. All necessary random samples shall be provided to the Resident upon request without cost to the Department. All such samples shall be returned to the Contractor upon completion of the tests.

712.32 Copper Tubing Copper tubing and fittings shall conform to the requirements of ASTM B88M Type A [ASTM B88, Type K] or better.

712.33 Non-metallic Pipe, Flexible Non-metallic pipe and pipe fittings shall be acceptable flexible pipe manufactured from virgin polyethylene polymer suitable for transmitting liquids intended for human or animal consumption.

712.34 Non-metallic Pipe, Rigid Non-metallic pipe shall be Schedule 40 polyvinylchloride (PVC) that meets the requirement of ASTM D1785. Fittings shall be of the same material.

712.341 Metallic Pipe Metallic pipe shall be ANSI, Standard B36.10, Schedule 40 steel pipe conforming to the requirements of ASTM A53 Types E or S, Grade B. End plates shall be steel conforming to ASTM A36/A36M.

Both the sleeve and end plates shall be hot dip galvanized. Pipe sleeve splices shall be welded splices with full penetration weld before galvanizing.

712.35 Epoxy Resin Epoxy resin for grouting or sealing shall consist of a mineral filled thixotropic, flexible epoxy resin having a pot life of approximately one hour at 10°C [50°F]. The grout shall be an approved product suitable for cementing steel dowels into the preformed holes of curb inlets and adjacent curbing. The sealant shall be an approved product, light gray in color and suitable for coating the surface.

712.36 Bituminous Curb The asphalt cement for bituminous curb shall be of the grade required for the wearing course, or shall be Viscosity Grade AC-20 meeting the current requirements of Subsection 702.01 Asphalt Cement. The aggregate shall conform to the requirements of Subsection 703.07. The coarse aggregate portion retained on the 2.36 mm [No. 8] sieve may be either crushed rock or crushed gravel.

The mineral constituents of the bituminous mixture shall be sized and graded and combined in a composite blend that will produce a stable durable curbing with an acceptable texture.
Bituminous material for curb shall meet the requirements of Section 403 - Hot Bituminous Pavement.

712.37 Precast Concrete Slab Portland cement concrete for precast slabs shall meet the requirements of Section 502 - Structural Concrete, Class A.

The slabs shall be precast to the dimension shown on the plans and cross section and in accordance with the Standard Detail plans for Concrete Sidewalk Slab. The surface shall be finished with a float finish in accordance with Subsection 502.14(c). Lift devices of sufficient strength to hold the slab while suspended from cables shall be cast into the top or back of the slab.

712.38 Stone Slab Stone slabs shall be of granite from an acceptable source, hard, durable, predominantly gray in color, free from seams which impair the structural integrity and be of smooth splitting character. Natural color variations characteristic of the deposit will be

permitted. Exposed surfaces shall be free from drill holes or indications of drill holes. The granite slabs in any one section of backslope must be all the same finish.

The granite slabs shall be scabble dressed or sawed to an approximately true plane having no projections or depressions over 13 mm [½ in] under a 600 mm [2 ft] straightedge or over 25 mm [1 in] under a 1200 mm [4 ft] straightedge. The arris at the intersection of the top surface and exposed front face shall be pitched so that the arris line is uniform throughout the length of the installed slabs. The sides shall be square to the exposed face unless the slabs are to be set on a radius or other special condition which requires that the joints be cut to fit, but in any case shall be so finished that when the stones are placed side by side no space more than 20 mm [3/4 in] shall show in the joint for the full exposed height.

Liftpin holes in all sides will be allowed except on the exposed face.

## SECTION 717
## ROADSIDE IMPROVEMENT MATERIAL

717.03 C. Method #3 - Roadside Mixture #3 Change the seed proportions to the following:

| | |
|---|---|
| Crown Vetch | 25% |
| Perennial Lupine | 25% |
| Red Clover | 12.5% |
| Annual Rye | 37.5% |

717.05 Mulch Binder Change the third sentence to read as follows:

"Paper fiber mulch may be used as a binder at the rate of 2.3 kg/unit [5 lb/unit]."

## SECTION 722
## GEOTEXTILES

722.01 Stabilization/Reinforcement Geotextile Add the following to note #3; "The strengths specified in the columns labeled"<50%" and "≥ 50%" refer to the elongation at which the geotextile material was tested. For example; if a fabric is tested at 15% elongation then it must meet or exceed the minimum strength shown in the "<50%" column. Submittals must include the percent elongation at which the material was tested."

722.02 Drainage Geotextile Add the following to note #3; "The strengths specified in the columns labeled"<50%" and "≥ 50%" refer to the elongation at which the geotextile material was tested. For example; if a fabric is tested at 15% elongation then it must meet or exceed the minimum strength shown in the "<50%" column. Submittals must include the percent elongation at which the material was tested."

722.01 Erosion Control Geotextile Add the following note to Elongation in the Mechanical Property Table; "The strengths specified in the columns labeled"<50%" and "≥ 50%" refer to the elongation at which the geotextile material was tested. For example; if a fabric is tested at 15% elongation then it must meet or exceed the minimum strength shown in the "<50%" column. Submittals must include the percent elongation at which the material was tested."

Town: **Brunswick, Pleasant St. & Rte 1**
Projects: **STP-1284(100)X, PIN 12841.00**
**STP-1290(800)E, Pin 12908.00**
Date: **March 6, 2006**

# SPECIAL PROVISIONS
# SECTION 104
# Utilities

## MEETING

A Pre-construction Utility Conference, as defined in Subsection 104.4.6 of the Standard Specifications **is** required.

## GENERAL INFORMATION

These Special Provisions outline the arrangements that have been made by the Department for utility and/or railroad work to be undertaken in conjunction with this project. The following list identifies all known utilities or railroads having facilities presently located within the limits of this project or intending to install facilities during project construction
.

**Overview:**

| Utility/Railroad | Aerial | Underground |
|---|---|---|
| Central Maine Power Company | X | |
| Susquehanna Communication | X | |
| Verizon | X | |
| Brunswick-Topsham Water District | | X |
| Maine Central Railroad Co. | X | |
| Brunswick Sewer District | | X |
| Maine Natural Gas | | X |

Temporary utility adjustments are **not** anticipated. If temporary relocation becomes necessary, the contractor shall notify the affected utilities. Sufficient time will need to be allowed prior to the construction for all required temporary relocation.

Utility working days are Monday through Friday, conditions permitting. Times are estimated on the basis of a single crew for each utility.

In all cases, the utilities shall be notified, by the Contractor, well in advance (three weeks) before work in any area is to commence.

All utility crossings over highways will provide not less than 18 feet vertical clearance over existing ground in cut or over finished grade in fill, during construction of this project.

Any times and dates mentioned are estimates only and are dependent upon favorable weather, working conditions, and freedom from emergencies. The Contractor shall have no claim against the Department if they are exceeded.

The Contractor shall plan and schedule his work in such a manner that the utilities that are located on this project will not be harmed, damaged or impacted in anyway. The Contractor and the Utility will coordinate their work plans in an effort not to interfere with each others progress or the completion of the project.

## AERIAL

No Aerial Utility adjustments are anticipated as part of this project. All above ground utility locations (hydrants, poles, guys, etc.) will be reviewed for compliance with the Department's Above Ground Pole Policy following the completion of the paving operation. Any above ground utility locations not meeting the Department's Above Ground Pole Policy will require relocation to the proper offset.

## SUBSURFACE

The **Brunswick-Topsham Water District** will require 8 working days to loosen and lower their respective structures before any milling or shimming process. Additional days may be required for repairs to any structures that are found to be broken or not operating properly. The **Brunswick-Topsham Water District** will then raise their respective structures during the paving operation. The **Brunswick-Topsham Water District** will require 5 working days notification before loosening or adjusting is required. This work will be coordinated with the paving contractor. The contact for the **Brunswick-Topsham Water District** is Bill Alexander at 729-9956.

The **Brunswick Sewer District** has about 12 manholes to adjust before finish paving. The **Brunswick Sewer District** will require 5 working days to raise their respective structures to grade if necessary before final paving but after the shim process. The contractor shall notify **Brunswick Sewer District** at least 5 days prior to adjustments. Additional days may be required for repairs to any structures that are found to be broken or not operating properly. The **Brunswick Sewer District** will remove and plate existing manholes if contractor desires but will require 5 days notification and additional working days. The contact for the **Brunswick Sewer District** is Leonard Blanchette at 729-0148.

**Maine Natural Gas** has a gas main in the area of Pleasant and Union Street. There is a possibility of future expansion that could involve crossing Pleasant St. At the time of the creation of this 104 spec there has not been a decision of the expansion. The contractor shall be aware that a gas main may cross the project and gate adjustments may be need by **Maine Natural Gas** during the paving process. Any new information of this possible expansion will be discussed at the Pre-Utility meeting. The contact for Maine Natural Gas is Gary Kenny at 729-0420 ext. 103.

| Utility | Summary of Work | Estimated Working Days |
|---|---|---|
| Brunswick-Topsham Water District | Loosen and Check Water Gate Boxes | 8 |
| Brunswick Sewer District | Adjust Manholes to Grade | 5 |

## RAILROAD

The **BOSTON & MAINE RAILROAD CORPORATION** has rails that cross the project on Pleasant Street on grade and bridge crossing on Mill Street. The scope of the Pleasant Street project plans on stopping 15-20 feet from the actual rails. No Railroad agreement or flaggers will be needed by the railroad. The contractor must control traffic in a way that there are never cars standing on the rails. The contractor shall notify the **BOSTON & MAINE RAILROAD CORPORATION** at least five (5) days in advance of working in the area of the tracks. On the Mill Street project no impact to the rails in anticipated. If the scope of work changes in a way that would impact those rails the contractor shall notify the **BOSTON & MAINE RAILROAD CORPORATION** at least five (5) days in advance of any work in the area of the tracks. The contact for the railroad is George Thayer at 978-663-6973.

## UTILITY SIGNING

Any utility working within the construction limits of this project shall ensure that the traveling public is adequately protected at all times. All work areas shall be signed, lighted, and traffic flaggers employed as determined by field conditions. All traffic controls shall be in accordance with the latest edition of the Manual on Uniform Traffic Control Devices for Streets and Highways, as issued by the Federal Highway Administration.

## SAFE PRACTICES AROUND UTILITY FACILITIES

The Contractor shall be responsible for complying with M.R.S.A. Title 35-A, Chapter 7-A Sections 751 - 761 Overhead High-Voltage Line Safety Act. Prior to commencing any work that may come within ten (10) feet of any aerial electrical line; the Contractor shall notify the aerial utilities as per Section 757 of the above act.

Town: **Brunswick, Pleasant St. & Rte 1**
Projects: **STP-1284(100)X, PIN 12841.00**
**STP-1290(800)E, Pin 12908.00**
Date: **March 6, 2006**

**DIG SAFE**

The Contractor shall be responsible for determining the presence of underground utility facilities prior to commencing any excavation work and shall notify utilities of proposed excavation in accordance with M.R.S.A. Title 23 §3360-A, Maine "Dig Safe" System.

**MAINTAINING UTILITY LOCATION MARKINGS**

The Contractor will be responsible for maintaining the buried utility location markings following the initial locating by the appropriate utility or their designated representative.

**THE CONTRACTOR SHALL PLAN AND CONDUCT HIS WORK ACCORDINGLY.**

The following utilities are known to be located on this project:

| | | |
|---|---|---|
| **Central Maine Power Company** | Gary Crabtree | 791-8025 |
| **Susquehanna Communication** | Jay Maillet | 729-2623 |
| **Verizon** | Andrea Hanson | 442-8018 |
| **Brunswick-Topsham Water District** | Bill Alexander | 729-9956 |
| **Brunswick Sewer District** | Leonard Blanchette | 729-0148 |

Town: **Freeport, Rte 1 & Mallett Drive**
Projects: **STP-1309(400)X, PIN 13094.00**
**STP-1309(500)X, PIN 13095.00**
Date: **March 6, 2006**

**SPECIAL PROVISIONS**
**SECTION 104**
**Utilities**

**MEETING**

A Pre-construction Utility Conference, as defined in Subsection 104.4.6 of the Standard Specifications **is** required.

**GENERAL INFORMATION**

These Special Provisions outline the arrangements that have been made by the Department for utility and/or railroad work to be undertaken in conjunction with this project. The following list identifies all known utilities or railroads having facilities presently located within the limits of this project or intending to install facilities during project construction

.

**Overview:**

| Utility/Railroad | Aerial | Underground |
|---|---|---|
| Central Maine Power Company | X | X |
| Susquehanna Communication | X | X |
| Verizon | X | |
| Aqua Maine Water District | | X |
| Freeport Sewer District | | X |
| Freeport Public Works | | X |

Temporary utility adjustments are **not** anticipated. If temporary relocation becomes necessary, the contractor shall notify the affected utilities. Sufficient time will need to be allowed prior to the construction for all required temporary relocation.

Utility working days are Monday through Friday, conditions permitting. Times are estimated on the basis of a single crew for each utility.

In all cases, the utilities shall be notified, by the Contractor, well in advance (three weeks) before work in any area is to commence.

All utility crossings over highways will provide not less than 18 feet vertical clearance over existing ground in cut or over finished grade in fill, during construction of this project.

Any times and dates mentioned are estimates only and are dependent upon favorable weather, working conditions, and freedom from emergencies. The Contractor shall have no claim against the Department if they are exceeded.

The Contractor shall plan and schedule his work in such a manner that the utilities that are located on this project will not be harmed, damaged or impacted in anyway. The Contractor and the Utility will coordinate their work plans in an effort not to interfere with each others progress or the completion of the project.

## AERIAL

No Aerial Utility adjustments are anticipated as part of this project. All above ground utility locations (hydrants, poles, guys, etc.) will be reviewed for compliance with the Department's Above Ground Pole Policy following the completion of the paving operation. Any above ground utility locations not meeting the Department's Above Ground Pole Policy will require relocation to the proper offset.

## SUBSURFACE

The **Aqua Maine Water District** will require 10 working days to loosen, lower and inspect their respective structures before any milling or shimming process. Additional days may be required for repairs to any structures that are found to be broken or not operating properly. The **Aqua Maine Water District** will then raise their respective structures during the paving operation. Contractor will be responsible for raking the mix around the adjusted gate before rolling. The **Aqua Maine Water District** will require 10 working days notification before loosening or adjusting is required. This work will be coordinated with the paving contractor. The contact for the **Aqua Maine Water District** is Ron Seaman at 865-0831.

The **Freeport Sewer District** has about 18 manholes to adjust before finish paving total for all 3 pins. The **Freeport Sewer District** will require 10 working days to raise their respective structures to grade if necessary before final paving but after the shim process. The contractor shall notify **Freeport Sewer District** at least 5 days prior to adjustments. Additional days may be required for repairs to any structures that are found to be broken or not operating properly. The **Freeport Sewer District** will remove and plate existing manholes that conflict with milling but will require 5 days notification and additional working days. The contact for the **Freeport Sewer District** is Tom Allen at 865-3540.

The **Town of Freeport** has traffic lights in the intersection of Mallett Drive and Route 1. The contractor shall use caution when working in or around that area and consult the Resident for direction. The contact for Town of Freeport is Al Presgraves at 865-4743.

**Central Maine Power** reports that it has underground primary that crosses Rte 1 at West Street.

Contractor is to be aware of this primary line and contact **Dig-Safe** and **Central Maine Power** before any construction in that area. Contact for **Central Maine Power** is Gary Crabtree at 791-8025.

**Susquehanna Communications** indicates that it may have underground services in the area or the project. Contractor is advised to contact **Susquehanna Communications** prior to excavating to confirm their underground drops. The contact for **Susquehanna Communications** is Jay Maillet at 729-2623.

| Utility | Summary of Work | Estimated Working Days |
|---|---|---|
| Aqua Maine Water District | Loosen and Check Water Gate Boxes | 10 |
| Freeport Sewer District | Adjust Manholes to Grade | 10 |

## RAILROAD

The **BOSTON & MAINE RAILROAD CORPORATION** has rails in the area of the project on Main Street. No impact to the rails is anticipated. If the scope of work changes in a way that would impact those rails the contractor shall notify the **BOSTON & MAINE RAILROAD CORPORATION** at least five (5) days in advance of any work in the area of the tracks. The contact for the railroad is George Thayer at 978-663-6973.

## UTILITY SIGNING

Any utility working within the construction limits of this project shall ensure that the traveling public is adequately protected at all times. All work areas shall be signed, lighted, and traffic flaggers employed as determined by field conditions. All traffic controls shall be in accordance with the latest edition of the Manual on Uniform Traffic Control Devices for Streets and Highways, as issued by the Federal Highway Administration.

## SAFE PRACTICES AROUND UTILITY FACILITIES

The Contractor shall be responsible for complying with M.R.S.A. Title 35-A, Chapter 7-A Sections 751 - 761 Overhead High-Voltage Line Safety Act. Prior to commencing any work that may come within ten (10) feet of any aerial electrical line; the Contractor shall notify the aerial utilities as per Section 757 of the above act.

**DIG SAFE**

The Contractor shall be responsible for determining the presence of underground utility facilities prior to commencing any excavation work and shall notify utilities of proposed excavation in accordance with M.R.S.A. Title 23 §3360-A, Maine "Dig Safe" System.

**MAINTAINING UTILITY LOCATION MARKINGS**

The Contractor will be responsible for maintaining the buried utility location markings following the initial locating by the appropriate utility or their designated representative.

**THE CONTRACTOR SHALL PLAN AND CONDUCT HIS WORK ACCORDINGLY.**

The following utilities are known to be located on this project:

| | | |
|---|---|---|
| **Central Maine Power Company** | Gary Crabtree | 791-8025 |
| **Susquehanna Communication** | Jay Maillet | 729-2623 |
| **Verizon** | Andrea Hanson | 442-8018 |
| **Aqua Maine Water District** | Ron Seaman | 865-0831 |
| **Freeport Sewer District** | Tom Allen | 865-3540 |
| **Town of Freeport** | Al Presgraves | 865-4743 |
| **Boston & Maine Railroad** | George Thayer | 978-663-6973 |

SPECIAL PROVISION
SECTION 105
General Scope of Work
(Limitations of Operations)

1. Contractor shall maintain at least one lane of alternating traffic at all times.

2. Whenever possible, the contractor shall maintain two way traffic. When two lanes of traffic can not be maintained, movement of vehicles and pedestrians will be specifically addressed in the traffic control plan.

3. The contractor's traffic control plan shall address construction practices and schedules that will be implemented to minimize traffic disruptions. The traffic control plan must specifically address vehicular and pedestrian traffic at the Post Office and town library near the east end of the project.

4. Work areas in parking zones will be signed with No Parking signs, available through the town of Brunswick's Public Works Department per the following: No Parking signs can be posted no earlier than 12 hours preceding the scheduled work, and must be removed before the contractor leaves the work area at the conclusion of the work day. No Parking signs are to be posted only in those areas where the work is to occur including reasonable approach and departure zones. Under no conditions will No Parking signs be posted during the work day if no work is occurring in the posted area.

5. The City of Brunswick has a local noise ordinance that allows work to be done only between the hours of 7am to 7pm. The MDOT has had discussions with the city about possible night work. They seem to be willing to allow night work due to the traffic volumes and possible impact on tourism. Night work will be at the contractor's option, however, the contractor shall be responsible for obtaining permission from the city to work outside of the hours of 7am to 7pm prior to bidding.

SPECIAL PROVISION
SECTION 105
General Scope of Work
(Limitations of Operations)

1. Contractor shall maintain at least one lane of alternating traffic at all times.

2. Whenever possible the contractor shall maintain two way traffic. When two lanes of traffic can not be maintained, movement of vehicles and pedestrians will be specifically addressed in the traffic control plan.

3. No lane closures shall be allowed before 9am and shall be removed from travel way before 3:30 pm.

4. The contractor's traffic control plan shall address construction practices and schedules that will be implemented to minimize traffic disruptions.

5. The City of Brunswick has a local noise ordinance that allows work to be done only between the hours of 7am to 7pm. The MDOT has had discussions with the city about possible night work. They seem to be willing to allow night work due to the traffic volumes and possible impact on tourism. Night work will be at the contractor's option; however, the contractor shall be responsible for obtaining permission from the city to work outside of the hours of 7am to 7pm prior to bidding.

6. The Contractors Traffic Control Plan shall address the use of Pleasant St. as a detour for North bound Route 1 traffic. South Bound Route 1 traffic shall be maintained at a minimum of one lane with continuous or nearly continuous flow. The hours of the detour shall be from 9am to 3:30 pm. A five day notice shall be required before any Detour. All costs (excluding item # 652.41 Portable message boards) of notifying the public and public safety entities is incidental to the Traffic Control Plan.

SPECIAL PROVISION
SECTION 105
General Scope of Work
(Limitations of Operations)

1. Contractor shall maintain two way traffic at all times whenever possible. Those areas where two way traffic can not be maintained will be specifically addressed in the traffic control plan.

2. The contractor's traffic control plan shall address construction practices and schedules that will be implemented to minimize traffic disruptions.

3. Night work will be at the contractor's option; however, the contractor shall be responsible for obtaining permission from the town of Freeport to work nights prior to bidding.

SPECIAL PROVISION
SECTION 105
General Scope of Work
(Limitations of Operations)

1. Contractor shall maintain two way traffic at all times between the hours of 11:00 am and 7:00 pm.

2. The contractor's traffic control plan shall address construction practices and schedules that will be implemented to minimize traffic disruptions.

3. Paving operations shall be limited to the hours of 7:00 pm to 11:00 am.

May 8, 2006
JOA

SPECIAL PROVISION
SECTION 105
General Scope of Work
(Limitations of Operations)

Contractor will be allowed to commence work and end work daily according to the Department of Marine Resources Sunrise/Sunset Table at the following Web address (http://www.maine.gov/dmr/sunrise_table.htm). Contractor will be allowed to enter roadway at Sunrise and must be off the roadway before Sunset. "Any work conducted outside these times will require that the contractor provide appropriate lighting and safety attire for their employees in compliance with the MUTCD."

# SPECIAL PROVISION
## SECTION 107
## SCHEDULING OF WORK

Replace Section 107.4.2 with the following:

"107.4.2 Schedule of Work Required Within 21 Days of Contract Execution and before beginning any on-site activities, the Contractor shall provide the Department with its Schedule of Work. The Contractor shall plan the Work, including the activity of Subcontractors, vendors, and suppliers, such that all Work will be performed in Substantial Conformity with its Schedule of Work. The Schedule must include sufficient time for the Department to perform its functions as indicated in this Contract, including QA inspection and testing, approval of the Contractor's TCP, SEWPCP and QCP, and review of Working Drawings.

At a minimum, the Schedule of Work shall include a bar chart which shows the major Work activities, milestones, durations, and a timeline. Milestones to be included in the schedule include: (A) start of Work, (B) beginning and ending of planned Work suspensions, (C) Completion of Physical Work, and (D) Completion. If the Contractor Plans to Complete the Work before the specified Completion date, the Schedule shall so indicate.

Any restrictions that affect the Schedule of Work such as paving restrictions or In-Stream Work windows must be charted with the related activities to demonstrate that the Schedule of Work complies with the Contract.

The Department will review the Schedule of Work and provide comments to the Contractor within 20 days of receipt of the schedule. The Contractor will make the requested changes to the schedule and issue the finalized version to the Department."

**STP-1284(100)X Brunswick, Pleasant St**
**NH-1290(800)E Brunswick, Route 1**
**STP-1309(400)X Freeport, Mallet Drive**
**STP-1309(500)X Freeport, Route 1**

# Special Provision
# Section 107
## Prosecution and Progress
**(Contract Time)**

1. The contractor will be allowed to commence work anytime provided that all required plans/submittals have been received and approved by the MDOT.

2. A 24 hour notice will be required for any changes in the work schedule.

3. The completion date for project pin 12841.00 is August 31, 2006.

4. The completion date for project pin 12908.00 is August 31, 2006.

5. The completion date for Projects Pin 13094.00 and 13095.00 is October 14, 2006.

6. For every weekday not worked once operations commence, (excluding inclement weather days) the contractor will be charged Supplemental Liquidated Damages at the rate of $ 350.00 per day. However, the contractor will be allowed to submit a request to suspend work between the completion and commencing of projects.

7. Only one paving operation will be allowed excluding hand placed paving unless otherwise approved by the Resident.

8. The contractor will not be allowed to work on the following days: September 1, 2, 3, 4, 2006.

# SPECIAL PROVISION
# SECTION 401
# PLANT MIX PAVEMENTS

401.06 Weather and Seasonal Limitations This Section is revised by the addition of the following:

On all sections of overlay with wearing courses less than 25 mm [1 in] thick, the wearing course for the travelway and adjacent shoulders shall be placed between the dates of May 15th and the Saturday following September 22th.

On all sections of overlay with wearing courses less than 25 mm [1 in] thick, the wearing course for the travelway and adjacent shoulders shall be placed between the dates of June 1st and the Saturday following September 15th if the work is to be performed, either by contract requirement, or Contractor option, during conditions defined as “nightwork”.

JOA

January 5, 2006
Supersedes February 24, 2005

# SPECIAL PROVISION
# SECTION 401
# HOT MIX ASPHALT
( ¾ inch (20mm) Surface Treatment)

Description The Contractor shall furnish and place one or more courses of Hot Mix Asphalt (HMA) pavement on an approved base in accordance with the Contract documents and in reasonably close conformity with the lines, grades, thicknesses and typical cross sections shown on the plans or established. The Department shall accept this work under Quality Assurance provisions as specified in Standard Specifications Section 401 – Hot Mix Asphalt Pavement, and Standard Specifications Section 106 - Quality.

The 20 mm [¾ in] HMA Surface Course shall meet all of the Materials, Seasonal Limitations, Equipment, and Construction requirements of Section 401, with the following additions and changes.

GRADATION REQUIREMENTS

| Sieve Size | Percent Passing |
|---|---|
| 12.5 mm | 100 |
| 9.5 mm | 95-100 |
| 4.75 mm | 60-95 |
| 2.36 mm | 40-65 |
| 1.18 mm | - |
| 0.600 mm | - |
| 0.300 mm | - |
| 0.075 mm | 2-8.0 |

VOLUMETRIC DESIGN CRITERIA

| | |
|---|---|
| Voids at $N_{des}$ | 4.0 |
| VMA | 15.0 minimum |
| VFB | 65-80 |
| Fines/Eff.Binder | 0.6-1.2 |

If the proposed JMF has been used and approved under Method "A" testing requirements for mix volumetrics and density on a current MaineDOT project, to include layover mix designs used the previous year, a test strip *will not be required.*

A test strip at a nominal depth of 1¼ inch [30mm], full lane width, *shall be required* with any new JMF's not used and approved under the Method "A" testing requirements for mix volumetrics and density on a current calendar year MaineDOT project.

If a test strip is required, it shall conform to the following requirements:

On roads open to two way traffic, the test strip shall be placed over the full width of the travel way section, not to exceed 2000 ft [600 meters] in length, or 440 ton [400 Mg] production. Prior to the placement of the test strip a passing verification test is required. A fog coat of Item 409.15, Bituminous Tack Coat, shall be applied to the level course prior to the placement of the 20mm Surface Treatment Course, payment to be made under the 409.15 pay item.
The test strip **shall not** be excluded from QA analysis, but will be evaluated in accordance with Section 401.03. The Contractor shall notify the Department at least 48 hours in advance of placing the test strip. The test strip is intended to allow the Contractor to establish a method of compaction for the ¾ inch [20mm] surface course areas.

Once the methods are established, rolling patterns, equipment, and methods will become part of the QCP. The test strip will allow for any necessary adjustments to the mix design and or plant mixing procedures, as well as for the Department to evaluate the quality of the pavement. Changes to the compaction effort, number, or type of rollers may be permitted by the Department if damage to the HMA course becomes evident on the ¾ inch (20mm) surface treatment areas. The use of a 16 ton minimum weight pneumatic-tired roller is required on all materials placed under this specification, unless otherwise authorized by the Department.

Mix samples and cores will be obtained from the test strip. A minimum of three mix samples shall be randomly selected from the test strip. Five cores shall be randomly sampled from the mat and tested for density verification. Should the resulting core values average less than 92.0% TMD, (average of 5 tests ), the Department will reject the strip. The Contractor will remove and replace rejected test strips at their expense. After completion of the test strip, the Contractor shall make any final adjustments to the job mix formula in accordance to Standard Specifications, Section 401, subsection 401.03 - Composition of Mixtures, or compaction method. Paving operations shall not resume until the Contractor and the Department determines that material meeting the Contract requirements can be produced, and any changes to the Job Mix Formula have been approved by the Department. The Department shall pay for an accepted test strip as determined Section 401.222 – Pay Factor A and B, for this item. A new test strip shall be required if a current lot is terminated or completed, and a new lot is started.

The Department may halt the production and placement of the ¾ in [20mm] HMA Surface Course and require the construction of a new test strip if the Department finds that material being produced, hauled, or placed does not meet the requirements of Sections 401.08 through 401.18.

The final pavement surface may be evaluated for smoothness in accordance with the Standard Specifications, revision of December 2002, Section 402 - Pavement Smoothness, for informational data collection, or used in addition to section 401.101 – Surface Tolerances to isolate defective areas found to be of poor ride quality.

The Contractor shall sample, test, and evaluate Hot Mix Asphalt Pavement in accordance with the minimum frequencies outlined in Section 401, Table 2: Minimum Quality Control Frequencies.

The Contractor shall monitor plant production using running average of three control charts as specified in Section 106, and Control Limits as specified in Section 401, Table 3: Control Limits.

The Acceptance Criteria shall be as specified in Section 401, Table 4: Acceptance Criteria.

The Acceptance Limit targets will be as specified on the JMF, and the Department will use the appropriate Acceptance Limits table from Section, Table 5: Method A, or Table 7: Method B and C, for the acceptance method noted in the Special Provision 403.

The Contractor shall cease paving operations whenever one of the following occurs on a lot in progress:

a) The Pay Factor for VMA, Voids @ $N_d$, Percent PGAB, composite gradation, VFB, fines to effective binder or density using all Acceptance or all Quality Control tests for the current lot is less than 0.85.
b) The Coarse Aggregate Angularity or Fine Aggregate Angularity value falls below the requirements of Section 703.07 , Table 3, for the design traffic level.
c) Each of the first 2 control tests for the lot fall outside the upper or lower limits for VMA, Voids @ Nd, or Percent PGAB. This includes any case where both tests are out on the same, or different properties.
d) The Flat and Elongated Particles value exceeds 10 percent by ASTM D-4791.
e) There is any visible damage to the aggregate due to over-densification other than on variable depth shim courses.
f) The Contractor fails to follow the approved QCP.
g) The Contractors control chart shows the process to be out of control on any property listed in Section 401, subsection 401.18 , Table 3: Control Limits

Price Adjustment The Department will apply price adjustments for the Hot Mix Asphalt utilized under this Special Provision as outlined in Section 401.222 : Pay Factor for methods A and B; mixes with Volumetric Property requirements.

Dispute Resolution The Contractor may dispute an acceptance test for this item as outlined in Section 401.223 for PGAB, Air Void, and VMA Content only.

Method of Measurement The Department will measure Hot Mix Asphalt pavement by the ton (megagram) in accordance with Section 109 - Measurement and Payment.

Basis of Payment The Department will pay for the Work, in place and accepted, in accordance with the applicable sections of the Special Provisions at the contract unit price per ton (megagram).

Payment will be made under:

| Pay Item | Pay Unit |
|---|---|
| 403.210 9.5mm Hot Mix Asphalt Pavement | Ton (megagram) |

March 28, 2006
Superseded January 06, 2006

SUPPLEMENTAL SPECIFICATION
SECTION 401
HOT MIX ASPHALT PAVEMENT

The Standard Specification section 401 – Hot Mix Asphalt Pavement, has been modified with the following revisions. All sections not revised by this Supplemental Specification shall be as outlined in Section 401 of the Standard Specifications.

401.20 Acceptance – subsection 401.201 Method A – paragraph c:

c. Acceptance Testing The Department will obtain samples of Hot Mix Asphalt Pavement in conformance with AASHTO T168 Sampling Bituminous Paving Mixtures, and the MDOT/ ACM Sampling Policy, which will then be transported by the Contractor to the designated MDOT Laboratory, as directed by MDOT in approved transport containers to be provided by the Department, unless otherwise directed by the Resident. The Department will take the sample randomly within each sublot. Target values shall be as specified in the JMF. The Department will use Table 5 for calculating pay factors for gradation, PGAB Content, Air Voids at $N_{design}$, VMA, Fines to Effective Binder and VFB. The Department will retain the test results for the Acceptance sample until 7:00 AM, on the second working day of receipt of the sample, or after receipt of the Contractors results of the Acceptance sample split. Upon conclusion of each lot, where there is a minimum of four sublots, results shall be examined for statistical outliers, as stated in Section 106.7.2 - Statistical Outliers.

401.222 Pay Factor (PF) (Methods A and B) - (revised paragraph 1 and 2)

The Department will use density, Performance Graded Asphalt Binder content, voids @$N_{d,}$ VMA, VFB, $F/B^e$, and the screen sizes listed in Table 8 for the type of HMA represented in the JMF. The Department will evaluate materials using the following price adjustment factors under Section 106.7 - Quality Level Analysis.

The Department will apply price adjustments to the appropriate Hot Mix Asphalt Pavement pay items. Price adjustments shall be applied based on test results for each lot. If any pay factor for any single property (or composite gradation) falls below 0.85, the Contractor shall shut down the HMA plant.

If any single pay factor for PGAB Content, VMA, or Air Voids under :

a. Method A falls below 0.80, but above 0.74, then the composite pay factor for PGAB Content, VMA, and Air Voids shall be paid at the lowest computed value.
If any single pay factor for PGAB Content, VMA, or Air Voids falls at, or below 0.74, then the composite pay factor for PGAB Content, VMA, and Air Voids shall be 0.55.

b. Method B falls below 0.83, then the composite pay factor for PGAB Content, VMA, and Air Voids shall be 0.70.

401.223 Process for Dispute Resolution (Methods A & B only)

a. Dispute Resolution sampling At the time of Hot-Mix Asphalt sampling, the Department will obtain a split sample of each Acceptance test random sample for possible dispute resolution testing. The Contractor shall also obtain a split sample of the HMA at this same time. If the Contractor wishes to retain the option of requesting dispute testing of the initial Acceptance sample, the Contractor will test their split of the Acceptance sample and shall report their results to the Resident, with a copy to the QA Engineer at the Central Laboratory in Bangor by 7:00 AM, on the second working day from time of sampling. The Department's dispute resolution split sample will be properly labeled and stored for a period of not more than two weeks, or until the sample is tested.

# SUPPLEMENTAL SPECIFICATION
## SECTION 401
## HOT MIX ASPHALT PAVEMENT

The Standard Specification 401 – Hot Mix Asphalt Pavement, has been modified with the following revisions. All sections not revised by this Supplemental Specification shall be as outlined in Section 401 of the Standard Specifications.

TABLE 1: VOLUMETRIC DESIGN CRITERIA

| Design ESAL's (Millions) | Required Density (Percent of $G_{mm}$) | | | Voids in the Mineral Aggregate (VMA)(Minimum Percent) | | | | | Voids Filled with Binder (VFB) (Minimum %) | Fines/Eff. Binder Ratio |
|---|---|---|---|---|---|---|---|---|---|---|
| | | | | Nominal Maximum Aggregate Size (mm) | | | | | | |
| | $N_{initial}$ | $N_{design}$ | $N_{max}$ | 25 [1 inch] | 19 [¾ inch] | 12.5 [½ inch] | 9.5 [⅜ inch] | 4.75 [#4] | | |
| <0.3 | ≤91.5 | 96.0 | ≤98.0 | 12.5 | 13.5 | 14.5 | 15.5 | 16.0 | 70-80 | 0.6-1.2 |
| 0.3 to <3 | ≤90.5 | | | | | | | | 65-78 | |
| 3 to <10 | ≤89.0 | | | | | | | | 65-75* | |
| 10 to <30 | | | | | | | | | | |
| ≥ 30 | | | | | | | | | | |

*For 9.5 mm [⅜ in] nominal maximum aggregate size mixtures, the maximum VFB is 76.
*For 4.75 mm [#4] nominal maximum aggregate size mixtures, the maximum VFB is 80.

401.04 Temperature Requirements After the JMF is established, the temperatures of the mixture shall conform to the following tolerances:

In the truck at the mixing plant - allowable range - 275 to 325 °F [135 to 162°C]
At the Paver - allowable range - 275 to 325 °F [135 to 162°C]

The JMF and the mix subsequently produced shall meet the requirements of Tables 1 and Section 703.07. Under no circumstances will the Department accept HMA (unless the binder has been modified) that has been heated to temperatures over 325°F [162°C ].

**Brunswick**
**NH-1290(800)E**
**STP-1284(100)X**
**Route 1**
**Pleasant Street**
**Level II**
**June 23, 2006**

# SPECIAL PROVISION
# SECTION 403
# HOT MIX ASPHALT OVERLAY

| Desc. of Course | Grad. Design | Item # | Bit Cont. % of Mix | Total Thick | No. of Layers | Comp. Notes |
|---|---|---|---|---|---|---|
| | | **2" mill and ¾" Shim and Overlay** | | | | |
| | | **Mainline Travelway and Shoulders** | | | | |
| Wearing | 9.5mm | 403.210 | N/A | ¾" | 1 | 4,7,20,22 |
| Shim | 9.5mm | 403.211 | N/A | variable | 1/more | 2,4,7,10 |
| | | **Drives,Sidewalks, Misc.** | | | | |
| Wearing | 9.5mm | 403.209 | N/A | 2" | 1/more | 2,3,9,10,13 |

## COMPLEMENTARY NOTES

2. The density requirements are waived.
3. The design traffic level for mix placed shall be <0.3 million ESALS.
4. The design traffic level for mix placed shall be 0.3 to <3 million ESALS.
7. Section 106.6 Acceptance, (1) Method A.
9. Section 106.6 Acceptance, (2) Method C.
10. A **"FINE"** 9.5 mm mix with a gradation above or through the restricted zone shall be used for this item.
13. A mixture meeting the requirements of section 703.09 Grading 'D', with a minimum PGAB content of 6%, and the limits of Special Provision 401, Table 9 (Drives and Sidewalks) for PGAB content and gradation may be substituted for this item. A job mix formula shall be submitted to the department for approval.
20. The Contractor may place the specified HMA pavement course, not to exceed ¾ inch (20mm) compacted depth, over the full single travel lane width, for each production day. If this option is utilized the Contractor will be required to place a matching course of HMA over the adjacent section of travel lane before the end of the following calendar day. The Contractor will also be responsible for installing additional warning signage that clearly defines the centerline elevation differential hazard, as well as additional centerline delineation such as double RPM application, or temporary painted line. The Traffic Control Plan shall be amended to include this option and the additional requirements. All signs and traffic control devices will conform to Section 719.01, and Section 652, and will be installed prior to the work, at a maximum spacing of 0.50 mile [0.80 km] for the entire length of the effected roadway section. On roadways with two-way traffic, the Contractor will be required to place the specified course over the full width of the mainline traveled way being paved prior to opening the sections to weekend or holiday traffic. If this option is utilized, all additional signing, labor, traffic control devices, or incidentals will not be paid for directly, but will be considered incidental to the appropriate 652 items.
22. See Special Provision 401 – ¾ inch (20mm) Surface Treatment for project specifics.

Tack Coat

A tack coat of emulsified asphalt, RS-1 or HFMS-1, Item 409.15 shall be applied to any existing pavement at a rate of approximately 0.025 gal/yd², and on milled pavement approximately 0.05 gal/yd² prior to placing a new course. A fog coat of emulsified asphalt shall be applied between shim /base courses and the surface course, at a rate not to exceed 0.025 gal/yd².

Tack used between layers of pavement will be paid for at the contract unit price for Item 409.15 Bituminous Tack Coat.

# SPECIAL PROVISION
# SECTION 403
# HOT MIX ASPHALT OVERLAY

| Desc. of Course | Grad. Design | Item # | Bit Cont. % of Mix | Total Thick | No. of Layers | Comp. Notes |
|---|---|---|---|---|---|---|
| | | | **¾" Shim and Overlay** | | | |
| | | | **Mainline Travelway and Shoulders** | | | |
| Wearing | 9.5mm | 403.210 | N/A | ¾" | 1 | 4,7,20,22 |
| Shim | 9.5mm | 403.211 | N/A | variable | 1/more | 2,4,7,10 |
| | | | **Drives, Misc.** | | | |
| Wearing | 9.5mm | 403.209 | N/A | 1"-2" | 1/more | 2,3,9,10,13 |

## COMPLEMENTARY NOTES

2. The density requirements are waived.
3. The design traffic level for mix placed shall be <0.3 million ESALS.
4. The design traffic level for mix placed shall be 0.3 to <3 million ESALS.
7. Section 106.6 Acceptance, (1) Method A.
9. Section 106.6 Acceptance, (2) Method C.
10. A **"FINE"** 9.5 mm mix with a gradation above or through the restricted zone shall be used for this item.
13. A mixture meeting the requirements of section 703.09 Grading 'D', with a minimum PGAB content of 6%, and the limits of Special Provision 401, Table 9 (Drives and Sidewalks) for PGAB content and gradation may be substituted for this item. A job mix formula shall be submitted to the department for approval.
20. The Contractor may place the specified HMA pavement course, not to exceed ¾ inch (20mm) compacted depth, over the full single travel lane width, for each production day. If this option is utilized the Contractor will be required to place a matching course of HMA over the adjacent section of travel lane before the end of the following calendar day. The Contractor will also be responsible for installing additional warning signage that clearly defines the centerline elevation differential hazard, as well as additional centerline delineation such as double RPM application, or temporary painted line. The Traffic Control Plan shall be amended to include this option and the additional requirements. All signs and traffic control devices will conform to Section 719.01, and Section 652, and will be installed prior to the work, at a maximum spacing of 0.50 mile [0.80 km] for the entire length of the effected roadway section. On roadways with two-way traffic, the Contractor will be required to place the specified course over the full width of the mainline traveled way being paved prior to opening the sections to weekend or holiday traffic. If this option is utilized, all additional signing, labor, traffic control devices, or incidentals will not be paid for directly, but will be considered incidental to the appropriate 652 items.
22. See Special Provision 401 – ¾ inch (20mm) Surface Treatment for project specifics.

Tack Coat

A tack coat of emulsified asphalt, RS-1 or HFMS-1, Item 409.15 shall be applied to any existing pavement at a rate of approximately 0.025 gal/yd², and on milled pavement approximately 0.05 gal/yd² prior to placing a new course. A fog coat of emulsified asphalt shall be applied between shim /base courses and the surface course, at a rate not to exceed 0.025 gal/yd².

Tack used between layers of pavement will be paid for at the contract unit price for Item 409.15 Bituminous Tack Coat.

May 25, 2006
Supersedes March 8, 2006

# SPECIAL PROVISION
# SECTION 606
# GUARDRAIL

606.01 Description This work shall consist of furnishing and installing guardrail components in accordance with these specifications and in reasonably close conformity with the lines and grades shown on the plans or as established. The types of guardrail are designated as follows:

Type 3-Galvanized steel "w" beam, wood posts or galvanized steel posts.
Type 3a-Galvanized steel "w" beam, wood posts, wood or composite offset blocks.
Type 3aa-Corrosion resistant steel "w" beam, wood posts, wood or composite offset blocks.
Type 3b-Galvanized steel "w" beam, galvanized steel posts, galvanized steel offset blocks.
Type 3c-Galvanized steel "w" beam, wood posts or galvanized steel posts, wood or composite offset blocks.
Type 3d-Galvanized steel "w" beam, galvanized steel posts, wood or composite offset blocks.
Thrie Beam-Galvanized steel thrie beam, wood posts or galvanized steel posts, wood or composite offset blocks.

Median barriers shall consist of two beams of the above types, mounted on single posts. Except for thrie beam, median barriers may include rub rails when called for.

Bridge mounted guardrail shall consist of furnishing all labor, materials, and equipment necessary to install guardrail as shown on the plans. This work shall also include drilling for and installation of offset blocks if specified, and incidental hardware necessary for satisfactory completion of the work.

Remove and Reset and Remove, Modify, and Reset guardrail shall consist of removing the existing designated guardrail and resetting in a new location as shown on the plans or directed by the Resident. Remove, Modify, and Reset guardrail and Modify guardrail include the following guardrail modifications: Removing plate washers at all posts, except at anchorage assemblies as noted on the Standard Details, Adding offset blocks, and other modifications as listed in the Construction Notes or General Notes. Modifications shall conform to the guardrail Standard Details.

Bridge Connection shall consist of the installation and attachment of beam guardrail to the existing bridge. This work shall consist of constructing a concrete end post or modifying an existing endpost as required, furnishing, and installing a terminal connector, necessary hardware, and incidentals required to complete the work as shown on the plans. Bridge Transition shall consist of a bridge connection and furnishing and installing guardrail components as shown in the Standard Details.

606.02 Materials Materials shall meet the requirements specified in the following Sections of Division 700 - Materials:

| | |
|---|---|
| Timber Preservative | 708.05 |
| Metal Beam Rail | 710.04 |
| Guardrail Posts | 710.07 |
| Guardrail Hardware | 710.08 |

Guardrail components shall meet the applicable standards of "A Guide to Standardized Highway Barrier Hardware" prepared and approved by the AASHTO-AGC-ARTBA Joint Cooperative Committee, Task Force 13 Report.

Posts for underdrain delineators shall be “U” channel steel, 2.44m [8 ft] long, 3.72 kg/m [2 ½ lb/ft] minimum and have 9.5 mm [3/8 in] round holes, 25 mm [1 in] center to center for a minimum distance of 610 mm [2 ft] from the top of the post.

Reflectorized Flexible Guardrail Markers shall be mounted on all guardrails. A marker shall be mounted onto guardrail posts at the flared end treatment’s terminal and its tangent point, both at the leading and trailing ends of each run of guardrail. The marker’s flexible posts shall be grey with either silver-white or yellow reflectors (to match the edge line striping) at the tangents, red at leading ends, and green at trailing ends. Whenever the end treatment is not flared, markers will only be required at the end treatment’s terminal. These shall be red or green as appropriate. Markers shall be installed on the protected side of guardrail posts unless otherwise approved by the Resident. Reflectorized flexible guardrail markers shall be from the Maine DOT’s Approved Product List of Guardrail Material. The marker shall be grey, flexible, durable, and of a non-discoloring material to which 75 mm [3 in] by 225 mm [9 in] reflectors shall be applied, and capable of recovering from repeated impacts. Reflective material shall meet the requirements of Section 719.01 for ASTM D 4956 Type III reflective sheeting. The marker shall be secured to the guardrail post with two fasteners, as shown in the Standard Details.

Reflectorized beam guardrail (“butterfly”-type) delineators shall be mounted on all “w”-beam guardrail. The delineators shall be mounted within the guardrail beam at guardrail posts. Delineators shall be fabricated from high-impact, ultraviolet & weather resistant thermoplastic. Reflectorized beam guardrail delineators shall be placed at approximately 20 m [62.5 ft] intervals or every tenth post on tangents and at approximately 10 m [31.25 ft] intervals or every fifth post on curves. Exact locations of the delineators shall be as directed by the Resident. On divided highways, the left hand delineators shall be yellow and the right hand delineators shall be silver/white. On two directional highways, the right hand side shall be silver/white and no reflectorized delineator used on the left. All reflectors shall have reflective sheeting applied to only one side of the delineator facing the direction of traffic as shown in the Standard Detail 606(07). Reflectorized sheeting for guardrail delineators shall meet the requirements of Section 719.01.

Single wood post shall be of cedar, white oak, or tamarack, well seasoned, straight, and sound and have been cut from live trees. The outer and inner bark shall be removed and all knots trimmed flush with the surface of the post. Posts shall be uniform taper and free of kinks and bends.

Single steel post shall conform to the requirements of Section 710.07 b.

Single steel pipe post shall be galvanized, seamless steel pipe conforming to the requirements of ASTM A120, Schedule No. 40, Standard Weight.

Acceptable multiple mailbox assemblies shall be listed on the Department’s Approved Products List and shall be NCHRP 350 tested and approved.

The Guardrail 350 Flared Terminal shall be a terminal with a 1.2 m [4 ft] offset as shown in the Manufacturer's installation instructions.

Existing materials damaged or lost during adjusting, removing and resetting, or removing, modifying, and resetting, shall be replaced by the Contractor without additional compensation. Existing guardrail posts and guardrail beams found to be unfit for reuse shall be replaced when directed by the Resident.

606.03 Posts Posts for guardrail shall be set plumb in holes or they may be driven if suitable driving equipment is used to prevent battering and distorting the post. When posts are driven through pavement, the damaged area around the post shall be repaired with approved bituminous patching. Damage to lighting and signal conduit and conductors shall be repaired by the Contractor.

When set in holes, posts shall be on a stable foundation and the space around the posts, backfilled in layers with suitable material, thoroughly tamped.

The reflectorized flexible guardrail markers shall be set plumb with the reflective surface facing the oncoming traffic. Markers shall be installed on the protected side of guardrail posts. Markers, which become bent or otherwise damaged, shall be removed and replaced with new markers.

Single wood posts shall be set plumb in holes and backfilled in layers with suitable material, thoroughly tamped. The Resident will designate the elevation and shape of the top. The posts, that are not pressure treated, shall be painted two coats of good quality oil base exterior house paint.

Single steel posts shall be set plumb in holes as specified for single wood posts or they may be driven if suitable driving equipment is used to prevent battering and distorting the post.

Additional bolt holes required in existing posts shall be drilled or punched, but the size of the holes shall not exceed the dimensions given in the Standard Details. Metal around the holes shall be thoroughly cleaned and painted with two coats of approved aluminum rust resistant paint. Holes shall not be burned.

606.04 Rails Brackets and fittings shall be placed and fastened as shown on the plans. Rail beams shall be erected and aligned to provide a smooth, continuous barrier. Beams shall be lapped with the exposed end away from approaching traffic.

End assemblies shall be installed as shown on the plans and shall be securely attached to the rail section and end post.

All bolts shall be of sufficient length to extend beyond the nuts but not more than 13 mm [½ in]. Nuts shall be drawn tight.

Additional bolt holes required in existing beams shall be drilled or punched, but the size of the holes shall not exceed the dimensions given in the Standard Details. Metal around the holes shall be thoroughly cleaned and painted with two coats of approved aluminum rust resistant paint. Holes shall not be burned.

606.045 Offset Blocks The same offset block material is to be provided for the entire project unless otherwise specified.

606.05 Shoulder Widening At designated locations the existing shoulder of the roadway shall be widened as shown on the plans. All grading, paving, seeding, and other necessary work shall be in accordance with the Specifications for the type work being done.

606.06 Mail Box Post Single wood post shall be installed at the designated location for the support of the mailbox. The multiple mailbox assemblies shall be installed at the designated location in accordance with the Standard Details and as recommended by the Manufacturer. Attachment of the mailbox to the post will be the responsibility of the home or business owner.

606.07 Abraded Surfaces All galvanized surfaces of new guardrail and posts, which have been abraded so that the base metal is exposed, and the threaded portions of all fittings and fasteners and cut ends of bolts shall be cleaned and painted with two coats of approved rust resistant paint.

606.08 Method of Measurement Guardrail will be measured by the meter [linear foot] from center to center of end posts along the gradient of the rail except where end connections are made to masonry or steel structures, in which case measurement will be as shown on the plans.

Terminal section, low volume end, NCHRP 350 end treatments, reflectorized flexible guardrail marker, terminal end, bridge transition, bridge connection, multiple mailbox post, and single post will be measured by each unit of the kind specified and installed.

Widened shoulder will be measured as a unit of grading within the limits shown on the plans.

Excavation in solid rock for placement of posts will be measured by the cubic meter [cubic yard] determined from the actual depth of the hole and a hypothetical circle diameter of 600 mm [2 ft].

606.09 Basis of Payment The accepted quantities of guardrail will be paid for at the contract unit price per meter [linear foot] for the type specified, complete in place. Reflectorized beam guardrail (“butterfly”-type) delineators will not be paid for directly, but will be considered incidental to guardrail items. Terminal section, buffer end, NCHRP 350 end treatment, bridge connection, single post and reflectorized flexible guardrail markers will be paid for at the contract unit price each for the kind specified complete in place.

NCHRP 350 end treatments and low volume guardrail ends will be paid for at the contract price each, complete in place which price shall be full payment for furnishing and installing all components including the terminal section, posts, offset blocks, "w" beam, cable foundation posts, plates and for all incidentals necessary to complete the installation within the limits as shown on the Standard Details or the Manufacturer’s installation instructions. Such payment shall also be full compensation for furnishing all material, excavating, backfilling holes, assembling, and all incidentals necessary to complete the work, except that for excavation for posts or anchorages in solid ledge rock, payment will be made under Pay Item 206.07. Type III Retroreflective Adhesive Sheeting shall be applied to the approach buffer end sections and sized to substantially cover the end section. On all roadways, the ends

shall be marked with alternating black and retroreflective yellow stripes. The stripes shall be 75 mm [3 in] wide and sloped down at an angle of 45 degrees toward the side on which traffic is to pass the end section. Guardrail 350 flared terminal shall also include a set of installation drawings supplied to the Resident, and the Contractor shall provide one complete set of replacement parts per contract and deliver the spare parts to the local Regional Office.

Anchorages to bridge end posts will be part of the bridge work. Connections thereto will be considered included in the unit bid price for guardrail.

Guardrail to be placed on a radius of curvature of 45 m [150 ft] or less will be paid for under the designated radius pay item for the type guardrail being placed.

Widened shoulder will be paid for at the contract unit price each complete in place and will be full compensation for furnishing and placing, grading and compaction of aggregate subbase and any required fill material.

Adjust guardrail will be paid for at the contract unit price per meter and will be full compensation for adjusting to grade. Payment shall also include adjusting terminal end treatments where required.

Modify guardrail will be paid for at the contract unit price per meter and will be full compensation for furnishing and installing offset blocks, additional posts, and other specified modifications; removing, modifying, installing, and adjusting to grade existing posts and beams; removing plate washers and backup plates, and all incidentals necessary to complete the work. Payment shall also include removing and resetting terminal ends where required.

Remove and Reset guardrail will be paid for at the contract unit price per meter and will be full compensation for removing, transporting, storing, reassembling all parts, necessary cutting, furnishing new parts when necessary, reinstalling at the new location, and all other incidentals necessary to complete the work. Payment shall also include removing and resetting terminal ends when required. No payment will be made for guardrail removed, but not reset and all costs for such removal shall be considered incidental to the various contract pay items.

Remove, Modify, and Reset guardrail will be paid for at the contract unit price per meter and will be full compensation for the requirements listed in Modify guardrail and Remove and Reset guardrail.

Bridge Connections will be paid for at the contract unit price each. Payment shall include, attaching the connection to the endpost including furnishing and placing concrete and reinforcing steel necessary to construct new endposts if required, furnishing and installing the terminal connector, and all miscellaneous hardware, labor, equipment, and incidentals necessary to complete the work.

Bridge Transitions will be paid for at the contract unit price each. Payment shall include furnishing and installing the thrie beam or “w”-beam terminal connector, doubled beam section, and transition section, where called for, posts, hardware, precast concrete transition curb, and any other necessary materials and labor, including the bridge connection as stated in the previous paragraph.

Payment will be made under:

| | Pay Item | Pay Unit |
|---|---|---|
| 606.15 | Guardrail Type 3a-Single Rail | meter [Linear Foot] |
| 606.151 | Guardrail Type 3aa-Single Rail | meter [Linear Foot] |
| 606.17 | Guardrail Type 3b-Single Rail | meter [Linear Foot] |
| 606.1721 | Bridge Transition - Type I | Each |
| 606.1722 | Bridge Transition - Type II | Each |
| 606.1731 | Bridge Connection - Type I | Each |
| 606.1732 | Bridge Connection - Type II | Each |
| 606.178 | Guardrail Beam | meter [Linear foot] |
| 606.18 | Guardrail Type 3b - Double Rail | meter [Linear foot] |
| 606.19 | Guardrail Type 3a - 4.5 m [15 ft] radius and less | meter [Linear Foot] |
| 606.191 | Guardrail Type 3aa - 4.5 m [15 ft] radius and less | meter [Linear Foot] |
| 606.20 | Guardrail Type 3a - over 4.5 m [15 ft] radius | meter [Linear Foot] |
| 606.201 | Guardrail Type 3aa - over 4.5 m [15 ft] radius | meter [Linear Foot] |
| 606.21 | Guardrail Type 3b - 4.5 m [15 ft] radius and less | meter [Linear Foot] |
| 606.22 | Guardrail Type 3b - over 4.5 m [15 ft] radius | meter [Linear Foot] |
| 606.23 | Guardrail Type 3c - Single Rail | meter [Linear Foot] |
| 606.2301 | Guardrail Type 3c - Double Rail | meter [Linear Foot] |
| 606.231 | Guardrail Type 3c - 4.5 m [15 ft] radius and less | meter [Linear Foot] |
| 606.232 | Guardrail Type 3c - over 4.5 m [15 ft] radius | meter [Linear Foot] |
| 606.24 | Guardrail Type 3d - Single Rail | meter [Linear Foot] |
| 606.2401 | Guardrail Type 3d - Double Rail | meter [Linear Foot] |
| 606.241 | Guardrail Type 3d - 4.5 m [15 ft] radius and less | meter [Linear Foot] |
| 606.242 | Guardrail Type 3d - over 4.5 m [15 feet] radius | meter [Linear Foot] |
| 606.25 | Terminal Connector | Each |
| 606.257 | Terminal Connector - Thrie Beam | Each |
| 606.265 | Terminal End-Single Rail - Galvanized Steel | Each |
| 606.266 | Terminal End-Single Rail - Corrosion Resistant Steel | Each |
| 606.275 | Terminal End-Double Rail - Galvanized Steel | Each |
| 606.276 | Terminal End-Double Rail - Corrosion Resistant Steel | Each |
| 606.353 | Reflectorized Flexible Guardrail Marker | Each |
| 606.354 | Remove and Reset Reflectorized Flexible Guardrail Marker | Each |
| 606.356 | Underdrain Delineator Post | Each |
| 606.358 | Guardrail, Modify, Type 3b to 3c | meter [Linear Foot] |
| 606.3581 | Guardrail, Modify Existing to Type 3d | meter [Linear Foot] |
| 606.362 | Guardrail, Adjust | meter [Linear Foot] |
| 606.365 | Guardrail, Remove, Modify, and Reset, Type 3b to 3c | meter [Linear Foot] |
| 606.3651 | Guardrail, Remove, Modify, and Reset Existing to Type 3d | meter [Linear Foot] |
| 606.366 | Guardrail, Removed and Reset, Type 3c | meter [Linear Foot] |
| 606.367 | Replace Unusable Existing Guardrail Posts | Each |
| 606.47 | Single Wood Post | Each |
| 606.48 | Single Galvanized Steel Post | Each |
| 606.50 | Single Steel Pipe Post | Each |

| | | |
|---|---|---|
| 606.51 | Multiple Mailbox Support | Each |
| 606.55 | Guardrail Type 3 - Single Rail | meter [Linear Foot] |
| 606.551 | Guardrail Type 3 - Single Rail with Rub Rail | meter [Linear Foot] |
| 606.56 | Guardrail Type 3 - Double Rail | meter [Linear Foot] |
| 606.561 | Guardrail Type 3 - Double Rail with Rub Rail | meter [Linear Foot] |
| 606.568 | Guardrail, Modify Type 3c -Double Rail | meter [Linear Foot] |
| 606.59 | Guardrail Type 3 - 4.5 m [15 ft] radius and less | meter [Linear Foot] |
| 606.60 | Guardrail Type 3 - over 4.5 m [15 ft] radius | meter [Linear Foot] |
| 606.63 | Thrie Beam Rail Beam | meter [Linear Foot] |
| 606.64 | Guardrail Thrie Beam - Double Rail | meter [Linear Foot] |
| 606.65 | Guardrail Thrie Beam - Single Rail | meter [Linear Foot] |
| 606.66 | Terminal End Thrie Beam | Each |
| 606.70 | Transition Section - Thrie Beam | Each |
| 606.71 | Guardrail Thrie Beam - 4.5 m [15 ft] radius and less | meter [Linear Foot] |
| 606.72 | Guardrail Thrie Beam - over 4.5 m [15 ft] radius | meter [Linear Foot] |
| 606.73 | Guardrail Thrie Beam - Single Rail Bridge Mounted | meter [Linear Foot] |
| 606.74 | Guardrail Type 3 - Single Rail Bridge Mounted | meter [Linear Foot] |
| 606.753 | Widen Shoulder for Low Volume Guardrail End - Type 3 | Each |
| 606.754 | Widen Shoulder for Guardrail 350 Flared Terminal | Each |
| 606.78 | Low Volume Guardrail End - Type 3 | Each |
| 606.79 | Guardrail 350 Flared Terminal | Each |

1. Reflectorized Flexible Guardrail Markers shall be from Maine DOT's Approved Product List of Guardrail Material.

2. Installation:
   a. Each bolt-hole diameter shall be the bolt diameter + 1/16".
   b. Wood post attachment - attach marker with 2, 5/16" diameter zinc-coated lag bolts, having 2" of embedment into wood post.
   c. Steel post attachment - attach marker with 2, 1/4" diameter zinc-coated bolt, washer and nut assemblies, having 1/2" of bolt extension behind steel post.
   d. When provided by the marker manufacturer, a stiffening pipe shall be inserted into the base of the marker prior to drilling bolt holes and shall remain in-place.

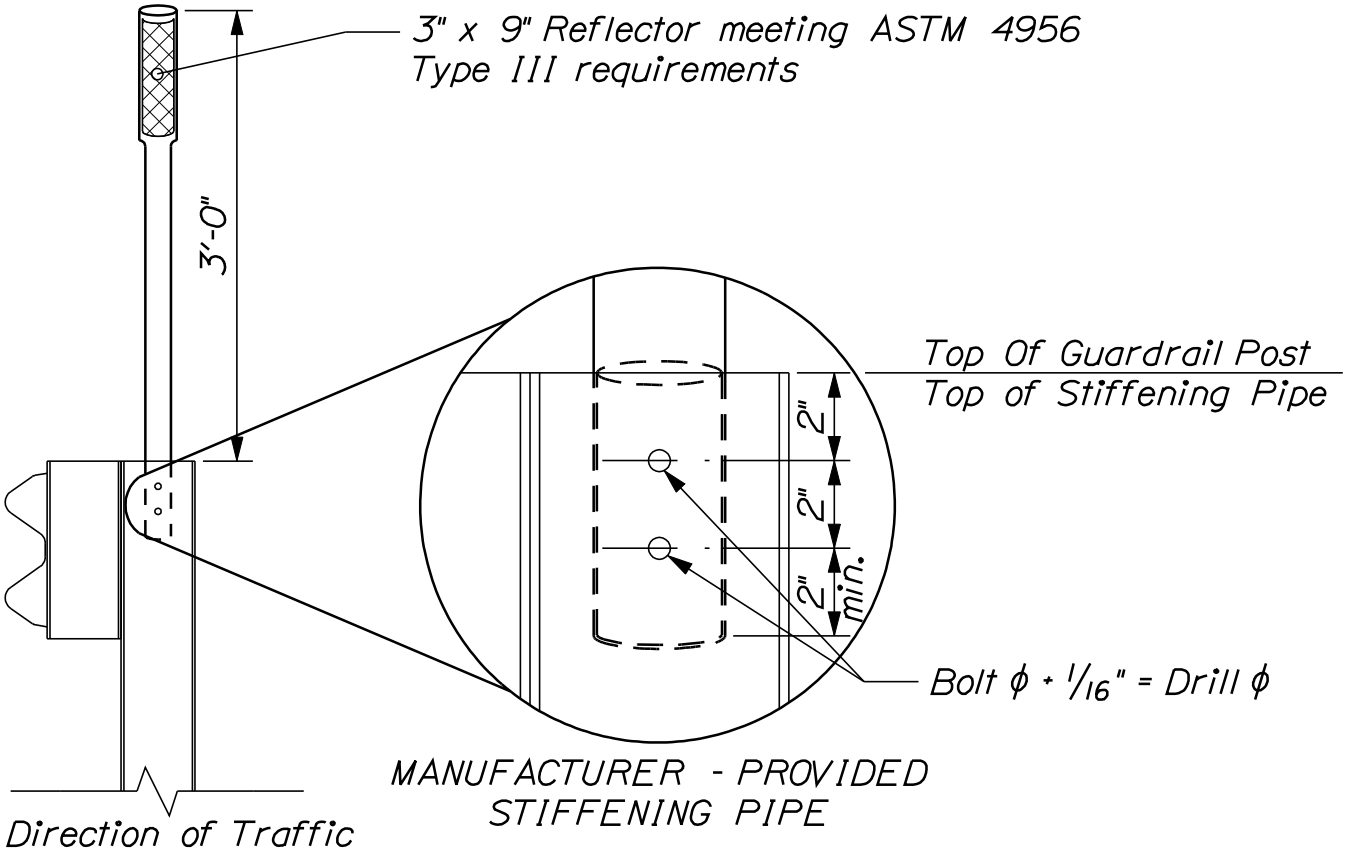


# REFLECTORIZED FLEXIBLE GUARDRAIL MARKER DETAILS

606(34)

# SPECIAL PROVISION
## SECTION 639
## ENGINEERING FACILITIES
(Field Office Type B)

Add the following to Standard Specification 639.

639.04 Field Offices  Make the following change

| Description | Quantity<br>Type B |
|---|---|
| Floor Area - $m^2$ [$ft^2$] | 20.5 [220] |

# SPECIAL PROVISION
## SECTION 652
## MAINTENANCE OF TRAFFIC
(Portable-Changeable Message Sign)

Description This work shall consist of furnishing a portable-changeable message signs. The signs shall be used as directed by the Resident, for the duration of this project. The signs shall be available for use before the start of the work on the project.

General The portable message sign shall be a Winko-matic, or an approved equal.

The sign message shall have a minimum of three lines and eight characters per line. It shall have a minimum clear visibility of 275 m [900 ft]. The changeability of the sign message shall be done with so-called, LED technology. The sign shall be lighted form above and below the message for night use.

The sign shall be mounted on a heavy duty trailer. The trailer shall have leveling jacks and a 50 mm [2 in] ball hitch. The sign shall have capability of being raised to a minimum of 2 m [7 ft] above the trailer, measured for the bottom of the sign. It shall be capable of being rotated 360 degrees with respect to the trailer. The sign shall be solar powered.

The controller shall be a high performance laptop computer with LCD display. It shall have a standard 72 Keyboard. The controller shall have the capability of a minimum 200 messages with a minimum 150 preprogrammed commonly used messages and 50 user created messages. It shall be enclosed in a weather proof cabinet on the trailer. The sign shall have the capability of flashing the message.

There shall be a battery back-up power source in the event of failure.

Method of Measurement The quantity of portable-changeable message signs will be measured for payment by each unit furnished and satisfactorily maintained.

Basis of Payment The accepted quantity of portable-changeable message signs will be paid for at the contract unit price each, which payment shall be full compensation for all labor, materials, equipment required for furnishing, installation of, Operation of, maintenance of, relocation of, and adjustment of the portable-changeable message sign and removing the signs.

Payment will be made under:

| Pay Item | Pay Unit |
|---|---|
| 652.41 Portable-Changeable Message Sign | Each |

May 10, 2006
Supersedes January 7, 2005

# SPECIAL PROVISION
# SECTION 652
## MAINTENANCE OF TRAFFIC
### Construction Sign Sheeting Material

Maine DOT is transitioning to super high intensity fluorescent retroreflective sheeting, ASTM D 4956 - Type VII, Type VIII, or Type IX (prismatic), for construction signs.

Currently serviceable Type III signs will be allowed until the final transition date. New signs bought after January 19, 2005 will conform to Type VII, Type VIII, or Type IX (prismatic) requirements. All signs will be Type VII, Type VIII, or Type IX (prismatic) after the final transition date of April 1, 2007.

During this transition period, sign packages will be of the same sheeting material (all Type III or all Type VII)

All Interstate Projects advertised after January 1, 2005 will be required to use the Type VII, Type VIII, or Type IX (prismatic) sheeting.

May 12, 2003
Supercedes December 10, 2001

# SPECIAL PROVISION
# SECTION 652
# MAINTENANCE OF TRAFFIC
(Traffic Control)

652.7 Method of Measurement. This entire Subsection is revised to read:
Traffic Control Supervisor, furnishing, installation, and maintenance of all traffic control devices **including flaggers** will be measured as one **lump sum** for all work authorized and performed.

652.8 Basis of Payment. This entire Subsection is revised to read:
Traffic Control will be paid for at the contract **lump sum** price. Payment will be full compensation for the Traffic Control Supervisor, flaggers, approach signs, work area signs, drums, cones, panel markers, barricades, arrow boards etc. and maintenance thereof including the setting up and taking down of lane closures as many times as necessary shall be considered part of the lump sum price.

Maintenance of signs includes: replacing devices damaged, lost, or stolen, and cleaning and moving as many times as necessary throughout the life of the contract, regardless whether the work areas or projects are geographically separated or not separated.

The Lump Sum will be payable in installments as follows: 5% of the Lump Sum once the approach signing is complete and approved, with the 95% balance to be paid as the work progresses at a rate proportional to the percentage completion of the Contract.

Failure by the contractor to follow the Contracts 652 Special Provisions and/or The Manual on Uniform Traffic Control Devices (MUTCD) and/or The Contractors own Traffic Control Plan will result in a reduction in payment, computed by reducing The Lump Sum Total by 5% per occurrence. The Departments Resident or any other representative of The Department reserves the right to suspend the work at any time and request a meeting to discuss violations and remedies. The Department shall not be held responsible for any delay in the work due to any suspension under this item.

All other requirements under the Standard Specifications Section 652 will be a part of the lump sum item.

**There will be no extra payment for this pay item after the expiration of contract time.**

Payment will be made under:

| Pay Item | Pay Unit |
|---|---|
| 652.39 Work Zone Traffic Control | Lump Sum |

February 27, 2003
Supersedes December 10, 2002

# SPECIAL PROVISION
# SECTION 652
# MAINTENANCE OF TRAFFIC

Approaches Approach signing shall include the following signs as a minimum. Field conditions may warrant the use of additional signs as determined by the Resident.

Road Work Next x Miles
Road Work 500 Feet
End Road Work

Work Area At each work site, signs and channelizing devices shall be used as directed by the Resident. Signs include:

Road Work xxxx[1]
One Lane Road Ahead
Flagger Sign

Other typical signs include:

Be Prepared to Stop
Low Shoulder
Bump
Pavement Ends

The above lists of Approach signs and Work Area signs are representative of the contract requirements. Other sign legends may be required.

The Contractor shall conduct their operations in such a manner that the roadway will not be restricted to one lane for more than 800 m [2,500 ft] at each work area. Where more than one work area restricts traffic to one lane operation, these work areas shall be separated by at least 1.6 km [1 mile] of two way operation.

Temporary Centerline A temporary centerline shall be placed each day on all new pavement to be used by traffic. The temporary centerline, when specified of reflectorized traffic paint, shall conform to the standard marking patterns used for permanent markings.

Failure to apply a temporary centerline daily will result in suspension of paving until temporary markers are applied to all previously placed pavement.

[1] "Road Work Ahead" to be used in mobile operations and "Road Work xx ft" to be used in stationary operations as directed by the Resident.

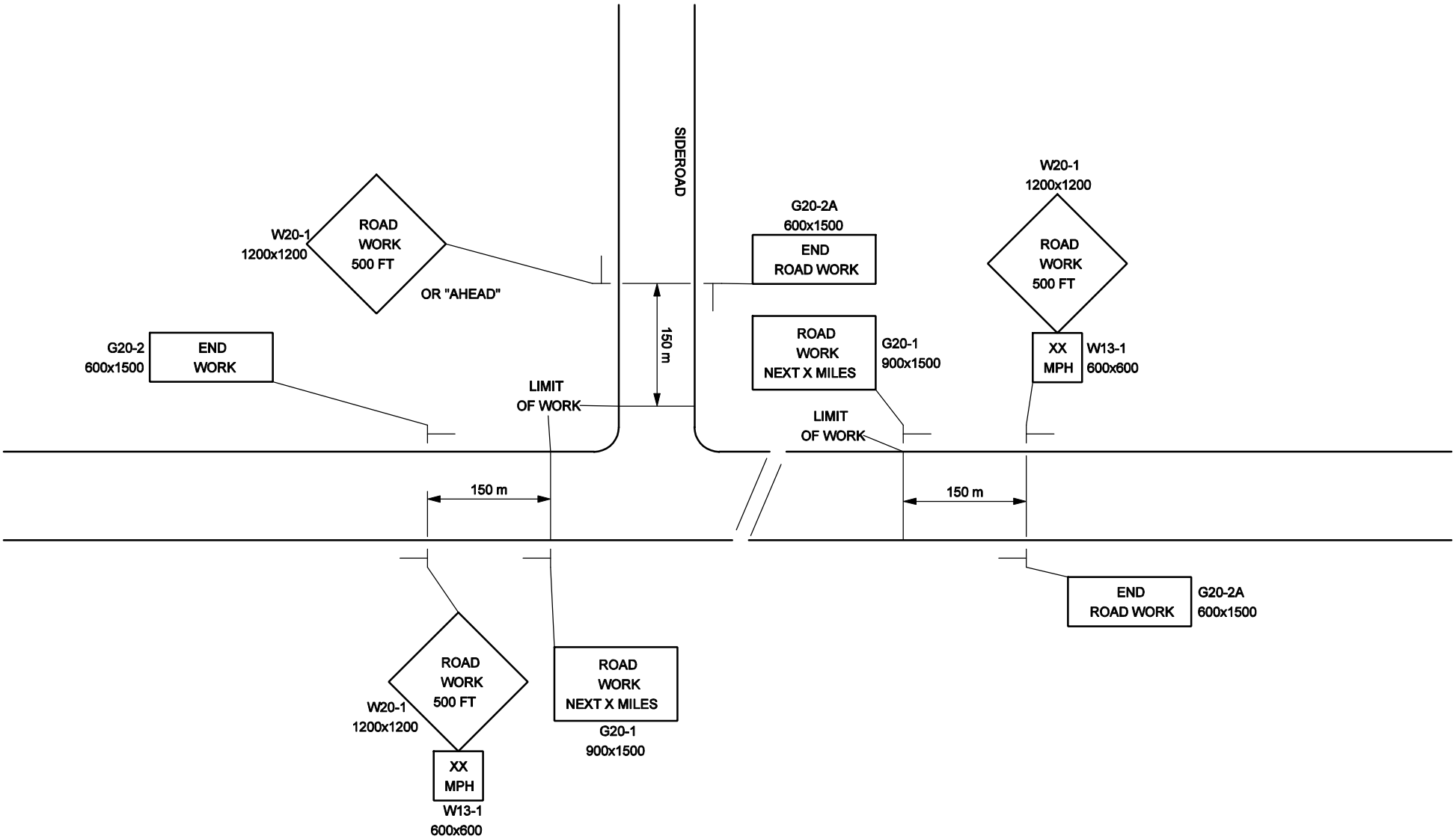


# TYPICAL
# -- PROJECT APPROACH SIGNING --
# TWO WAY TRAFFIC

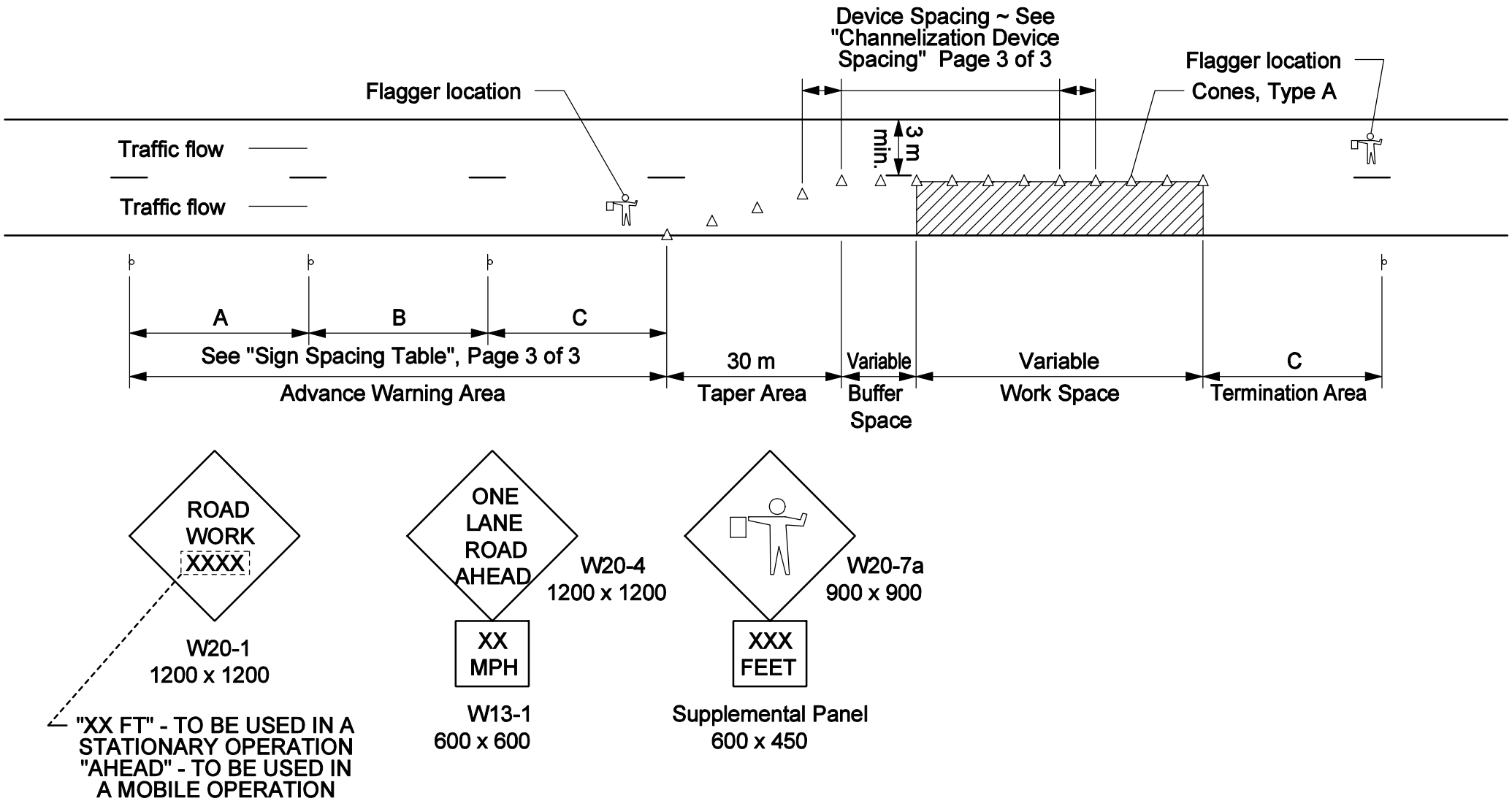


# TYPICAL APPLICATION: TWO - WAY, TWO LANE ROADWAY, CLOSING ONE LANE USING FLAGGERS

| TYPE OF TAPER | TAPER LENGTH (L)* |
|---|---|
| Merging Taper | at least L |
| Shifting Taper | at least 0.5L |
| Shoulder Taper | at least 0.33L |
| One-Lane, Two-Way Traffic Taper | 100 ft (30 m) maximum |
| Downstream Taper | 100 ft (30 m) per lane |

* Formulas for L are as follows:

For speed limits of 40 mph (60 km/h) or less:

$L = \frac{WS^2}{60}$ $\quad (L = \frac{WS^2}{155})$

For speed limits of 45 mph (70 km/h) or greater:

$L = WS$ $\quad (L = \frac{WS}{1.6})$

* Formulas for L are as follows:

A minimum of 5 channelization devices shall be used in the taper.

CHANNELIZATION DEVICE SPACING

The spacing of channelization devices shall not exceed a distance equal to 1.0 times the speed limit in mph when used for taper channelization, and a distance in feet of 2.0 times the speed limit in mph when used for tangent channelization.

| SIGN SPACING TABLE | | | |
|---|---|---|---|
| Road Type | Distance Between Signs** | | |
| | A | B | C |
| Urban 30 mph (50 km/h) or less | 100 (30) | 100 (30) | 100 (30) |
| Urban 35 mph (55 km/h) and greater | 350 (100) | 350 (100) | 350 (100) |
| Rural | 500 (150) | 500 (150) | 500 (150) |
| Expressway / Urban Parkway | 2,640 (800) | 1,500 (450) | 1000 (300) |

**Distances are shown in feet (meters).

## GENERAL NOTES;

1. Final placement of signs and devices may be changed to fit field conditions as approved by the Resident.

## SUGGESTED BUFFER ZONE LENGTHS

| Speed (mph) | Length (feet) | Speed (mph) | Length (feet) |
|---|---|---|---|
| 20 | 115 | 40 | 325 |
| 25 | 155 | 45 | 360 |
| 30 | 200 | 50 | 425 |
| 35 | 250 | 55 | 495 |

# SPECIAL PROVISION
# SECTION 656
Temporary Soil Erosion and Water Pollution Control

The following is added to Section 656 regarding Project Specific Information and Requirements. All references to the Maine Department of Transportation Best Management Practices for Erosion and Sediment Control (a.k.a. Best Management Practices manual or BMP Manual) are a reference to the latest revision of said manual. The "Table of Contents" of the latest version is dated "1/19/00" (available at http://www.state.me.us/mdot/mainhtml/bmp/bmpjan2000.pdf.) **Procedures specified shall be according to the BMP Manual unless stated otherwise.**

Delete the last sentence of Section 656.4.4, which reads, "After Final Acceptance of the project, the Contractor must submit the log to the Department which will become the property of the Department."

Any and all references to "bark mulch" or "composted bark mix" shall be a reference to "Erosion Control Mix" in accordance with *Standard Specification, Section 619 - Mulch.*

## Project Specific Information and Requirements

The following information and requirements apply specifically to this Project. The temporary soil erosion and water pollution control measures associated with this work shall be addressed in the SEWPCP.

These projects is located within the **Androscoggin River and Harraseeket River** watersheds, which are listed as a **CLASS C waterbody and an NPS Priority Watershed** respectively, and are considered **SENSITIVE** as defined by the MDOT BMP Manual. **However, due to the topography and drainage characteristics of the project area, the resource should not be affected by the work.**

**1. Newly disturbed earth shall be mulched by the end of each workday. Mulch shall be maintained on a daily basis.**

2. The SEWPCP shall describe the location and method of temporary erosion and sediment control for existing and proposed catch basins, outlet areas and culvert inlets and outlets.

**3. Dust control shall be in accordance with *Standard Specification, Section 637 – Dust Control* . All Dust Control procedures shall be included in the plan and be paid for as part of Pay Item 656.75.**

**4. Permanent slope stabilization measures shall be applied within one week of the last soil disturbance.**

5. Permanent seeding shall be done in accordance with *Special Provision, Section 618, Seeding* unless the Contract states otherwise.

6. Culvert inlet and outlet protection shall be installed within 48 hours of culvert installation, or prior to a storm event, whichever is sooner.

**SPECIAL PROVISION**
**SECTION 656**
Temporary Soil Erosion and Water Pollution Control

7. All disturbed ditches shall be stabilized by the end of each workday. Stabilization shall be maintained on a daily basis.

8. Erosion control blanket shall be installed in the bottoms of all ditches except where a stone lining is planned. Seed shall be applied prior to the placement of the blanket.

9. If check dams are used, they shall be constructed of stone in accordance with BMP Manual, Section 9. *Hay Bale Temporary Check Dams* **are not allowed**. Delete all reference to them in Section 9.

10. Stream flow shall be maintained at all times.

11. A cofferdam sedimentation basin is required if cofferdams are used. The basin shall be located in an upland area where the water can settle and seep into the ground or be released slowly to the resource in a manner that will not cause erosion. The location of such a cofferdam sedimentation basin shall be addressed in the SEWPCP.

# Permits & Cultural Resources Unit
# Summary Sheet

PIN #: 12841.00 Town: Brunswick
Permit Member: Laurie Rowe
Date submitted to Contracts: 6/19/06
Database/Projex ☒

---

☒ **Section 106 and Tribal Consultation**

| | | | |
|---|---|---|---|
| Architectural Resources | PA ☒ | Applicable☐ | Approved ☐ |
| Archeological Resources | PA ☒ | Applicable☐ | Approved ☐ |
| Tribal Consultation | Tribal Letters Sent ☐ | | Approved ☐ |

---

☒ **4(f) and 6(f)**

| | | | |
|---|---|---|---|
| Section 4(f) | Are there Right of Way Takes or Easements on Public Park Property | ☐ Yes | ☒ No |
| | Are there Right of Way Takes or Easements on Public Recreational Property | ☐ Yes | ☒ No |
| | Are there Right of Way Takes or Easements on Public Wildlife/ Waterfowl Refuge Property | ☐ Yes | ☒ No |
| | Are there Right of Way Takes or Easements on Historic Eligible or Listed Property | ☐Yes | ☒ No |
| | Are there Right of Way Takes or Easements on Property within a Historic District | ☐Yes | ☒ No |
| | Has MHPC Determined an Adverse Effect | ☐Yes | ☒ No |
| | Is a Programmatic or Full 4(f) Document Required | ☐Yes | ☒ No |
| | FHWA Concurrence/Approval ☐ | | |

LAWCON 6(f) N/A ☒ Applicable☐ Approved ☐

---

☒ **FEMA** GIS Floodplains Checked ☒ N/A ☒ Applicable☐

---

☒ **Maine Department of Inland Fisheries and Wildlife (MDIFW) Essential Habitat**

GIS Essential Habitats Checked ☒

| | | | |
|---|---|---|---|
| Eagle Nest | N/A ☒ | Applicable ☐ | Approved ☐ |
| Piping Plover | N/A ☒ | Applicable ☐ | Approved ☐ |
| Roseate Tern | N/A ☒ | Applicable☐ | Approved ☐ |

---

☒ **Maine Department of Conservation/ Public Lands, Submerged Land Lease** N/A ☒ Applicable ☐

---

☒ **Land Use Regulation Commission (LURC)** ☒ Not Applicable

| | | |
|---|---|---|
| No permit | ☐ | |
| Notice | ☐ | Approved ☐ |
| Permit | ☐ | Approved ☐ |

---

☒ **Maine Department of Environmental Protection (MDEP) Site Location of Development**

N/A ☒ Applicable ☐ Approved ☐

---

☒ **Maine Department of Environmental Protection (MDEP), Natural Resource Protection Act**

| | | |
|---|---|---|
| No permit required ☒ | | |
| Exempt ☐ | (Must use erosion and sediment control and not block fish passage.) | |
| PBR ☐ | | Approved ☐ |
| Tier 1 ☐ | | Approved ☐ |
| Tier 2 ☐ | | Approved ☐ |
| Individual ☐ | | Approved ☐ |

---

☒ **Army Corps of Engineers (ACOE), Section 10 of the Rivers and Harbors Act and Section 404 of the Clean Water Act.**

| | |
|---|---|
| No permit required ☒ | |
| Category 1-NR☐ | Approved ☐ |
| Category 2☐ | Approved ☐ |
| Category 3☐ | Approved ☐ |

---

☒ **IN-STREAM TIMING RESTRICTIONS:** 105 Special Provision ☐ n/a ☒

Dates instream work is allowed:

---

☒ Special Provision 656, Erosion Control Plan

---

*Boxes marked in red indicate items that are attached and need to be placed in the contract by the Project Manager.

# Permits & Cultural Resources Unit
# Summary Sheet

PIN #: 12908.00 Town: Brunswick
Permit Member: Laurie Rowe
Date submitted to Contracts: 6/19/06
Database/Projex ☒

---

☒ **Section 106 and Tribal Consultation**

| | | | |
|---|---|---|---|
| Architectural Resources | PA ☒ | Applicable☐ | Approved ☐ |
| Archeological Resources | PA ☒ | Applicable☐ | Approved ☐ |
| Tribal Consultation | Tribal Letters Sent ☐ | | Approved ☐ |

---

☒ **4(f) and 6(f)**

| | | |
|---|---|---|
| Section 4(f) | Are there Right of Way Takes or Easements on Public Park Property | ☐ Yes ☒ No |
| | Are there Right of Way Takes or Easements on Public Recreational Property | ☐ Yes ☒ No |
| | Are there Right of Way Takes or Easements on Public Wildlife/ Waterfowl Refuge Property | ☐ Yes ☒ No |
| | Are there Right of Way Takes or Easements on Historic Eligible or Listed Property | ☐Yes ☒ No |
| | Are there Right of Way Takes or Easements on Property within a Historic District | ☐Yes ☒ No |
| | Has MHPC Determined an Adverse Effect | ☐Yes ☒ No |
| | Is a Programmatic or Full 4(f) Document Required | ☐Yes ☒ No |
| | FHWA Concurrence/Approval ☐ | |

LAWCON 6(f) N/A ☐ Applicable☐ Approved ☐

---

☒ **FEMA** GIS Floodplains Checked ☒ N/A ☐ Applicable☒

---

☒ **Maine Department of Inland Fisheries and Wildlife (MDIFW) Essential Habitat**

GIS Essential Habitats Checked ☒

| | | | |
|---|---|---|---|
| Eagle Nest | N/A ☒ | Applicable ☐ | Approved ☐ |
| Piping Plover | N/A ☒ | Applicable ☐ | Approved ☐ |
| Roseate Tern | N/A ☒ | Applicable☐ | Approved ☐ |

---

☒ **Maine Department of Conservation/ Public Lands, Submerged Land Lease** N/A ☒ Applicable ☐

---

☒ **Land Use Regulation Commission (LURC)** ☒ Not Applicable

| | | |
|---|---|---|
| No permit | ☐ | |
| Notice | ☐ | Approved ☐ |
| Permit | ☐ | Approved ☐ |

---

☒ **Maine Department of Environmental Protection (MDEP) Site Location of Development**

N/A ☒ Applicable ☐ Approved ☐

---

☒ **Maine Department of Environmental Protection (MDEP), Natural Resource Protection Act**

| | | |
|---|---|---|
| No permit required ☐ | | |
| Exempt ☐ | (Must use erosion and sediment control and not block fish passage.) | |
| PBR ☒ | | Approved ☒ |
| Tier 1 ☐ | | Approved ☐ |
| Tier 2 ☐ | | Approved ☐ |
| Individual ☐ | | Approved ☐ |

---

☒ **Army Corps of Engineers (ACOE), Section 10 of the Rivers and Harbors Act and Section 404 of the Clean Water Act.**

| | |
|---|---|
| No permit required ☒ | |
| Category 1-NR☐ | Approved ☐ |
| Category 2☐ | Approved ☐ |
| Category 3☐ | Approved ☐ |

---

☒ **IN-STREAM TIMING RESTRICTIONS:** 105 Special Provision ☐ n/a ☒

Dates instream work is allowed:

---

☒ Special Provision 656, Erosion Control Plan

---

*Boxes marked in red indicate items that are attached and need to be placed in the contract by the Project Manager.

DEPARTMENT OF ENVIRONMENTAL PROTECTION (DEP)

# PERMIT BY RULE NOTIFICATION FORM

(For use with DEP Regulation, Chapter 305)

■ **MDOT PIN: 12908.00**

**Name of Applicant:** State of Maine Department of Transportation **Name of Contact:** David Gardner
**Mailing Address:** 16 Station State House **Town/City:** Augusta **State:** Me. **Zip Code:** 04330-0016
**Daytime Telephone #:** (207)-624-3105 **Name of Wetland, Water Body or Stream:** Androscoggin River

**Detailed Directions to Site:** Project is located on Route 1, beginning at Pleasant Street and extending northerly 0.49 of a mile to Route 24.

**Town/City:** Brunswick **Map #:** N/A **Lot #:** N/A **County:** Cumberland

**Description of Project:** Project scope is **Mill and fill, including the removal/modification/resetting of** type B to type D guard rail, and adjustment of existing catch basins, also includes the in-kind reconstruction of existing sidewalk on east side. The project will be performed in accordance with erosion control measures conforming with the latest versions of the *State of Maine Department of Transportation Standard Specifications for Highways and Bridges* and the *Department of Transportation's Best Management Practices for Erosion and Sediment Control.*

**Part of a larger project?** ☐Yes ☒No

(**CHECK ONE**) This project... ☐ does ☒ does not ...involve work below mean low water.

I am filing notice of my intent to carry out work which meets the requirements for Permit By Rule (PBR) under DEP Regulation, Chapter 305. I have a copy of PBR Sections checked below. I have read and will comply with all of the standards.

| | | |
|---|---|---|
| ☐Sec. (2) Soil Disturbance | ☐Sec. (8) Shoreline stabilization | ☐Sec. (14) Piers, Wharves & Pilings |
| ☐Sec. (3) Intake Pipes | ☐Sec. (9) Utility Crossing | ☐Sec. (15) Public Boat Ramps |
| ☐Sec. (4) Replacement of Structures | ☐Sec. (10) Stream Crossing | ☐Sec. (16) Coastal Sand Dune Projects |
| ☐Sec. (5) REPEALED | ☒Sec. (11) State Transport. Facilities | ☐Sec. (17) Transfers/Permit Extension |
| ☐Sec. (6) Movement of Rocks or Vegetation | ☐Sec. (12) Restoration of Natural Areas | ☐Sec. (18) Maintenance Dredging |
| ☐Sec. (7) Outfall Pipes | ☐Sec. (13) F&W Creation/Enhance/Water Quality Improvement | |

I authorize staff of the Departments of Environmental Protection, Inland Fisheries & Wildlife, and Marine Resources to access the project site for the purpose of determining compliance with the rules. I also understand that ***this permit is not valid until approved by the Department or 14 days after receipt by the Department, whichever is less.***

I have attached all of the following required submittals. **NOTIFICATION FORMS CANNOT BE ACCEPTED WITHOUT THE NECESSARY ATTACHMENTS:**

- ■ **A $55 (non-refundable) payment shall be done by internal billing.**
- ■ ***Attach* a U.S.G.S. topo map or Maine Atlas & Gazetteer map with the project site clearly marked.**
- ☐ ***Attach* photographs showing existing site conditions (unless not required under standards).**

**Signature of Applicant:** _____ **Date:** 03/31/06
John E. Dority, Chief Engineer

*Keep the bottom copy as a record of permit*. Send the form with attachments via certified mail to the Maine Dept. of Environmental Protection **at the appropriate regional office listed below**. The DEP will send a copy to the Town Office as evidence of the DEP's receipt of notification. No further authorization by DEP will be issued after receipt of notice. Permits are valid for two years. **Work carried out in violation of any standard is subject to enforcement action.**

AUGUSTA DEP STATE HOUSE STATION 17 AUGUSTA, ME 04333-0017 (207)287-2111 PORTLAND DEP 312 CANCO ROAD PORTLAND, ME 04103 (207)822-6300 BANGOR DEP 106 HOGAN ROAD BANGOR, ME 04401 (207)941-4570 PRESQUE ISLE DEP 1235 CENTRAL DRIVE PRESQUE ISLE, ME 04769 (207)764-0477

| OFFICE USE ONLY | Ck.# | Staff | | Staff | |
|---|---|---|---|---|---|
| PBR # | FP | Date | Acc. Date | Def. Date | After Photos |

# Permits & Cultural Resources Unit
# Summary Sheet

PIN #: 13094.00 Town: Freeport
Permit Member: Laurie Rowe
Date submitted to Contracts: 6/19/06
Database/Projex ☒

---

☒ **Section 106 and Tribal Consultation**

| | | | |
|---|---|---|---|
| Architectural Resources | PA ☐ | Applicable☒ | Approved ☒ |
| Archeological Resources | PA ☐ | Applicable☒ | Approved ☒ |
| Tribal Consultation | Tribal Letters Sent ☐ | | Approved ☐ |

---

☒ **4(f) and 6(f)**

Section 4(f)

| | | |
|---|---|---|
| Are there Right of Way Takes or Easements on Public Park Property | ☐ Yes | ☒ No |
| Are there Right of Way Takes or Easements on Public Recreational Property | ☐ Yes | ☒ No |
| Are there Right of Way Takes or Easements on Public Wildlife/ Waterfowl Refuge Property | ☐ Yes | ☒ No |
| Are there Right of Way Takes or Easements on Historic Eligible or Listed Property | ☐Yes | ☒ No |
| Are there Right of Way Takes or Easements on Property within a Historic District | ☐Yes | ☒ No |
| Has MHPC Determined an Adverse Effect | ☐Yes | ☒ No |
| Is a Programmatic or Full 4(f) Document Required | ☐Yes | ☒ No |
| FHWA Concurrence/Approval ☐ | | |

LAWCON 6(f) N/A ☒ Applicable☐ Approved ☐

---

☒ **FEMA** GIS Floodplains Checked ☒ N/A ☒ Applicable☐

---

☒ **Maine Department of Inland Fisheries and Wildlife (MDIFW) Essential Habitat**

GIS Essential Habitats Checked ☒

| | | | |
|---|---|---|---|
| Eagle Nest | N/A ☒ | Applicable ☐ | Approved ☐ |
| Piping Plover | N/A ☒ | Applicable ☐ | Approved ☐ |
| Roseate Tern | N/A ☒ | Applicable☐ | Approved ☐ |

---

☒ **Maine Department of Conservation/ Public Lands, Submerged Land Lease** N/A x Applicable ☐

---

☒ **Land Use Regulation Commission (LURC)** ☒ Not Applicable

| | | |
|---|---|---|
| No permit | ☐ | |
| Notice | ☐ | Approved ☐ |
| Permit | ☐ | Approved ☐ |

---

☒ **Maine Department of Environmental Protection (MDEP) Site Location of Development**

N/A☒ Applicable ☐ Approved ☐

---

☒ **Maine Department of Environmental Protection (MDEP), Natural Resource Protection Act**

| | | |
|---|---|---|
| No permit required ☐ | | |
| Exempt ☐ | (Must use erosion and sediment control and not block fish passage.) | |
| PBR ☒ | | Approved ☒ |
| Tier 1 ☐ | | Approved ☐ |
| Tier 2 ☐ | | Approved ☐ |
| Individual ☐ | | Approved ☐ |

---

☒ **Army Corps of Engineers (ACOE), Section 10 of the Rivers and Harbors Act and Section 404 of the Clean Water Act.**

| | |
|---|---|
| No permit required ☐ | |
| Category 1-NR☒ | Approved ☒ |
| Category 2☐ | Approved ☐ |
| Category 3☐ | Approved ☐ |

---

☒ **IN-STREAM TIMING RESTRICTIONS:** 105 Special Provision ☐ n/a ☒

Dates instream work is allowed:

---

☒ Special Provision 656, Erosion Control Plan

---

*Boxes marked in red indicate items that are attached and need to be placed in the contract by the Project Manager.

DEPARTMENT OF ENVIRONMENTAL PROTEIN (DEP)

# PERMIT BY RULE NOTIFICATION FORM

(For use with DEP Regulation, Chapter 305)

■ **MDOT PIN: 13094.00**

**Name of Applicant:** State of Maine Department of Transportation **Name of Contact:** David Gardner
**Mailing Address:** 16 Station State House **Town/City:** Augusta **State:** Me. **Zip Code:** 04330-0016
**Daytime Telephone #:** (207)-624-3105 **Name of Wetland, Water Body or Stream:** Unnamed Wetland

**Detailed Directions to Site:** Project is located on Mallett Drive, beginning at Route 1 and extending 0.60 of mile.

**Town/City:** Freeport **Map #:** N/A **Lot #:** N/A **County:** Cumberland

Description of Project: Project scope is a level 2 ¾" overlay with paving only at the south and north end of the project. Guardrail improvements and two catch basins to be adjusted north of I-295 bridge. The project will be performed in accordance with erosion control measures conforming with the latest versions of the *State of Maine Department of Transportation Standard Specifications for Highways and Bridges* and the *Department of Transportation's Best Management Practices for Erosion and Sediment Control.*

**Part of a larger project?** ☐Yes ☒No

(**CHECK ONE**) This project... ☐ does ☒ does not ...involve work below mean low water.

I am filing notice of my intent to carry out work which meets the requirements for Permit By Rule (PBR) under DEP Regulation, Chapter 305. I have a copy of PBR Sections checked below. I have read and will comply with all of the standards.

| | | |
|---|---|---|
| ☐Sec. (2) Soil Disturbance | ☐Sec. (8) Shoreline stabilization | ☐Sec. (14) Piers, Wharves & Pilings |
| ☐Sec. (3) Intake Pipes | ☐Sec. (9) Utility Crossing | ☐Sec. (15) Public Boat Ramps |
| ☐Sec. (4) Replacement of Structures | ☐Sec. (10) Stream Crossing | ☐Sec. (16) Coastal Sand Dune Projects |
| ☐Sec. (5) REPEALED | ☒Sec. (11) State Transport. Facilities | ☐Sec. (17) Transfers/Permit Extension |
| ☐Sec. (6) Movement of Rocks or Vegetation | ☐Sec. (12) Restoration of Natural Areas | ☐Sec. (18) Maintenance Dredging |
| ☐Sec. (7) Outfall Pipes | ☐Sec. (13) F&W Creation/Enhance/Water Quality Improvement | |

I authorize staff of the Departments of Environmental Protection, Inland Fisheries & Wildlife, and Marine Resources to access the project site for the purpose of determining compliance with the rules. I also understand that ***this permit is not valid until approved by the Department or 14 days after receipt by the Department, whichever is less.***

I have attached all of the following required submittals. **NOTIFICATION FORMS CANNOT BE ACCEPTED WITHOUT THE NECESSARY ATTACHMENTS:**

- ■ **A $55 (non-refundable) payment shall be done by internal billing.**
- ■ ***Attach* a U.S.G.S. topo map or Maine Atlas & Gazetteer map with the project site clearly marked.**
- ☐ ***Attach* photographs showing existing site conditions (unless not required under standards).**

**Signature of Applicant:** John E. Dority, Chief Engineer **Date:** 03/31/06

*Keep the bottom copy as a record of permit*. Send the form with attachments via certified mail to the Maine Dept. of Environmental Protection **at the appropriate regional office listed below**. The DEP will send a copy to the Town Office as evidence of the DEP's receipt of notification. No further authorization by DEP will be issued after receipt of notice. Permits are valid for two years. **Work carried out in violation of any standard is subject to enforcement action.**

AUGUSTA DEP STATE HOUSE STATION 17 AUGUSTA, ME 04333-0017 (207)287-2111 PORTLAND DEP 312 CANCO ROAD PORTLAND, ME 04103 (207)822-6300 BANGOR DEP 106 HOGAN ROAD BANGOR, ME 04401 (207)941-4570 PRESQUE ISLE DEP 1235 CENTRAL DRIVE PRESQUE ISLE, ME 04769 (207)764-0477

| OFFICE USE ONLY | Ck.# | Staff | Staff | |
|---|---|---|---|---|
| PBR # FP | Date | Acc. Date | Def. Date | After Photos |

# Permits & Cultural Resources Unit
# Summary Sheet

PIN #: 13095.00 Town: Freeport
Permit Member: Laurie Rowe
Date submitted to Contracts: 6/19/06
Database/Projex ☒

---

☒ **Section 106 and Tribal Consultation**

| | | | |
|---|---|---|---|
| Architectural Resources | PA ☒ | Applicable☐ | Approved ☐ |
| Archeological Resources | PA ☒ | Applicable☐ | Approved ☐ |
| Tribal Consultation | Tribal Letters Sent ☐ | | Approved ☐ |

---

☒ **4(f) and 6(f)**

| | | | |
|---|---|---|---|
| Section 4(f) | Are there Right of Way Takes or Easements on Public Park Property | ☐ Yes | ☒ No |
| | Are there Right of Way Takes or Easements on Public Recreational Property | ☐ Yes | ☒ No |
| | Are there Right of Way Takes or Easements on Public Wildlife/ Waterfowl Refuge Property | ☐ Yes | ☒ No |
| | Are there Right of Way Takes or Easements on Historic Eligible or Listed Property | ☐Yes | ☒ No |
| | Are there Right of Way Takes or Easements on Property within a Historic District | ☐Yes | ☒ No |
| | Has MHPC Determined an Adverse Effect | ☐Yes | ☒ No |
| | Is a Programmatic or Full 4(f) Document Required | ☐Yes | ☒ No |
| | FHWA Concurrence/Approval ☐ | | |

LAWCON 6(f) N/A ☒ Applicable☐ Approved ☐

---

☒ **FEMA** GIS Floodplains Checked ☐ N/A ☒ Applicable☐

---

☒ **Maine Department of Inland Fisheries and Wildlife (MDIFW) Essential Habitat**

GIS Essential Habitats Checked ☒

| | | | |
|---|---|---|---|
| Eagle Nest | N/A ☒ | Applicable ☐ | Approved ☐ |
| Piping Plover | N/A ☒ | Applicable ☐ | Approved ☐ |
| Roseate Tern | N/A ☒ | Applicable☐ | Approved ☐ |

---

☒ **Maine Department of Conservation/ Public Lands, Submerged Land Lease** N/A ☒ Applicable ☐

---

☒ **Land Use Regulation Commission (LURC)** ☒ Not Applicable

| | | |
|---|---|---|
| No permit | ☐ | |
| Notice | ☐ | Approved ☐ |
| Permit | ☐ | Approved ☐ |

---

☒ **Maine Department of Environmental Protection (MDEP) Site Location of Development**

N/A ☒ Applicable ☐ Approved ☐

---

☒ **Maine Department of Environmental Protection (MDEP), Natural Resource Protection Act**

| | | |
|---|---|---|
| No permit required ☒ | | |
| Exempt ☐ | (Must use erosion and sediment control and not block fish passage.) | |
| PBR ☐ | | Approved ☐ |
| Tier 1 ☐ | | Approved ☐ |
| Tier 2 ☐ | | Approved ☐ |
| Individual ☐ | | Approved ☐ |

---

☒ **Army Corps of Engineers (ACOE), Section 10 of the Rivers and Harbors Act and Section 404 of the Clean Water Act.**

| | |
|---|---|
| No permit required ☒ | |
| Category 1-NR☐ | Approved ☐ |
| Category 2☐ | Approved ☐ |
| Category 3☐ | Approved ☐ |

---

☒ **IN-STREAM TIMING RESTRICTIONS:** 105 Special Provision ☐ n/a ☒

Dates instream work is allowed:

---

☒ Special Provision 656, Erosion Control Plan

---

*Boxes marked in red indicate items that are attached and need to be placed in the contract by the Project Manager.

## Chapter 305: PERMIT BY RULE Section 11
## State Transportation Facilities

**1. Introduction.** A "permit by rule" or "PBR", when approved by the Department of Environmental Protection (DEP), is an approval for an activity that requires a permit under the Natural Resources Protection Act (NRPA). Only those activities described in this chapter may proceed under the PBR process. A PBR activity will not significantly affect the environment if carried out in accordance with this chapter, and generally has less of an impact on the environment than an activity requiring an individual permit. A PBR satisfies the Natural Resources Protection Act (NRPA) permit requirement and Water Quality Certification requirement.

If a proposed activity is not described in this chapter, or will not be conducted in accordance with the standards of this chapter, the applicant must obtain an individual permit prior to beginning the activity.

**A. Location of activity.** The location of an activity may affect whether an activity qualifies for PBR, and whether review by the Department of Inland Fisheries and Wildlife is required.

(1) Type of resource. For some types of activities, the availability of a PBR is affected by the type of natural resource in or adjacent to which the activity is proposed. For example, an applicant proposing an activity consisting of "Movement of rocks or vegetation" may receive a PBR only if the activity will take place in a great pond, river, stream or brook. Limitations concerning the location of activities are addressed in the "Applicability" provision in each section of this chapter.

(2) Essential habitat. Essential habitats include areas critical to the survival of threatened and endangered species such as the bald eagle, least tern, roseate tern, and piping plover. If the activity is located in essential habitat, such as near an eagle nesting site, a PBR is only available if the applicant obtains written approval from the Department of Inland Fisheries and Wildlife (IF&W). This approval from IF&W must be submitted to the DEP with the PBR notification form, and the applicant must follow any conditions stated in the IF&W approval.

NOTE: Maps showing areas of essential habitat are available from the Department of Inland Fisheries and Wildlife regional headquarters, municipal offices, the Land Use Regulation Commission (for unorganized territories) and DEP regional offices. If the activity is located in essential habitat, IF&W must be contacted to request and obtain a "certification of review and approval".

**B. Notification.** The applicant must file notice of the activity with the DEP prior to beginning work on the activity. The notification must be on a form provided by the DEP and must include any submissions required in this chapter. The applicant must keep a copy to serve as the permit.

The notification form must be sent to the DEP by certified mail (return receipt requested), or hand delivered to the DEP and date stamped by the department.

**C. Effective period**

(1) Beginning of period. The PBR becomes effective 14 calendar days after the DEP receives the notification form, unless the DEP approves or denies the PBR prior to that date. If the DEP does not speak with or write to the applicant within this 14 day period regarding the PBR notification, the applicant may proceed to carry out the activity.

There are three exceptions regarding the effective date of an approved PBR:

(a) Activities listed in Section 10 (Stream crossings) occurring in association with forest management are exempt from the 14 day waiting period.

(b) Activities listed in Section 2 (Soil disturbance) and Section 10 (Stream crossings) performed or supervised by individuals currently certified in erosion control practices by the DEP are exempt from the 14 day waiting period. To be certified in erosion control practices, an individual must successfully complete all course requirements of the Voluntary Contractor Certification Program administered by the DEP's Nonpoint Source Training and Resource Center.

(c) Activities that are part of a larger project requiring a permit under the Site Location of Development or the Storm Water Management Acts may not proceed until any required permit under those laws is obtained.

NOTE: Activities that are part of a larger project may require other permits from the DEP also. These other laws may prohibit the start of construction of any part of the project unless a permit under that law is obtained. In these cases, while not a violation of this rule, starting work on a PBR approved activity would be a violation of those other applicable laws.

(2) End of period. The PBR is generally effective for 2 years from the date of approval, except that a PBR for "Replacement of structures" under Section 4 is effective for 3 years.

NOTE: Activities that qualify under this chapter may need to meet other local, state and federal requirements. Examples -- (1) If an activity extends below the low water line of a lake, coastal wetland or international boundary water, the applicant should contact the Bureau of Parks and Lands (287-3061) concerning possible lease or easement requirements, or (2) If an activity will involve work below the mean high water line in navigable waters of the United States, the applicant should contact the Army Corps of Engineers (623-8367).

**D. Discretionary authority.** Notwithstanding compliance with the PBR applicability requirements and standards set forth in this chapter, the DEP may require an individual permit application to be filed in any case where credible evidence indicates that the activity:

(1) May violate the standards of the NRPA (38 M.R.S.A. Section 480-D);

(2) Could lead to significant environmental impacts, including cumulative impacts; or

(3) Could adversely impact a resource of special concern.

If an individual permit is required pursuant to this subsection, the DEP shall notify the applicant in writing within the 14 calendar day waiting period described in sub-section (C) above. When the DEP notifies an applicant than an individual permit is required, no work may be conducted unless and until the individual permit is obtained.

**E. Violations.** A violation of law occurs when a person, or his or her agent, performs or causes to be performed any activity subject to the NRPA without first obtaining a permit from the DEP, or acts contrary to the provisions of a permit. The person, his or her agent, or both, may be held

responsible for the violation. Commonly, the "person" is the landowner, and the "agent" is the contractor carrying out the activity. A violation occurs when:

(1) An activity occurs that is not allowed under PBR, whether or not a PBR notification form has been filed with and/or approved by the DEP;

(2) An activity occurs that is allowed under PBR, but a PBR for the activity has not become effective prior to the beginning of the activity; or

(3) An activity occurs that is allowed under PBR and a PBR for the activity is in effect, but the standards specified in this chapter are not met.

See the "applicability" provision under each activity for rules concerning what activities are allowed under PBR. A PBR is only valid for the person listed on the notification form, or for his or her agent.

Each day that a violation occurs or continues is considered a separate offense. Violations are subject to criminal penalties and civil penalties of not less than $100 nor more than $10,000 for each day of that violation (38 M.R.S.A. Section 349).

NOTE: A local Code Enforcement Officer (CEO) may take enforcement action for a violation of the Natural Resources Protection Act if he or she is authorized to represent a municipality in District Court, and he or she has been certified as familiar with court procedures, 30-A M.R.S.A. Section 4452(7).

## Chapter 305 Section 11

**State transportation facilities**

**A. Applicability**

(1) This section applies to the maintenance, repair, reconstruction, rehabilitation, replacement or minor construction of a State Transportation Facility carried out by, or under the authority of, the Maine Department of Transportation or the Maine Turnpike Authority, including any testing or preconstruction engineering, and associated technical support services.

(2) This section does not apply to an activity within a coastal sand dune system.

NOTE: The construction of a transportation facility other than roads and associated facilities may be subject to the Storm Water Management Law, 38 M.R.S.A. Section 420-D.

**B. Standards**

(1) Photographs of the area to be altered by the activity must be taken before work on the site begins. The photographs must be kept on file and be made available at the request of the DEP.

(2) The activity must be reviewed by the Department of Inland Fisheries and Wildlife, the Department of Marine Resources, the Atlantic Salmon Authority, and the DEP's Division of Environmental Assessment prior to the notification being filed with the DEP. The activity must be performed according to any recommendations from these authorities.

(3) The activity must be performed in accordance with erosion control measures conforming with the State of Maine Department of Transportation Standard Specifications for Highways and Bridges Revision of April 1995 and with the Department of Transportation's Best Management Practices for Erosion and Sediment Control, September 1997.

NOTE: Guidance on the use of erosion control best management practices can be obtained from the on site Construction Manager.

(4) Alignment changes may not exceed a distance of 200 feet between the old and new center lines in any natural resource.

(5) The activity may not alter more than 300 feet of shoreline (both shores added together) within a mile stretch of any river, stream or brook, including any bridge width or length of culvert.

(6) The activity may not alter more than 150 feet of shoreline (both shores added together) within a mile stretch of any outstanding river segment identified in 38 M.R.S.A. 480-P, including any bridge width or length of culvert.

(7) The activity must minimize wetland intrusion. The activity is exempt from the provisions of Chapter 310, the Wetland Protection Rules, if the activity alters less than 15,000 square feet of natural resources per mile of roadway (centerline measurement) provided that the following impacts are not exceeded within the 15,000 square foot area:

(a) 1,000 square feet of coastal wetland consisting of salt tolerant vegetation or shellfish habitat; or

(b) 5,000 square feet of coastal wetland not containing salt tolerant vegetation or shellfish habitat; or

(c) 1,000 square feet of a great pond.

All other activities must be performed in compliance with all sections of Chapter 310, the Wetland Protection Rules, except 310.2(C), 5(A), 9(1), 9(B) and 9(C).

(8) The activity may not permanently block any fish passage in any watercourse containing fish. The applicant must improve passage beyond what restriction may already exist unless the Department of Inland Fisheries and Wildlife, the Department of Marine Resources, the Atlantic Salmon Authority and the DEP's Division of Environmental Assessment concur that the improvement is not necessary.

(9) Rocks may not be removed from below the normal high water line of any coastal wetland, freshwater wetland, great pond, river, stream or brook except to the minimum extent necessary for completion of work within the limits of construction.

(10) If work is performed in a river, stream or brook that is less than three feet deep at the time and location of the activity, with the exception of culvert installation, the applicant must divert flow away from the activity while work is in progress.

(a) Diversion may be accomplished by the use of stable, inert material. No more than two thirds (2/3) of stream width may be diverted at one time.

(b) Any material used to divert water flow must be completely removed upon completion of the activity, and the stream bottom must be restored to its original condition.

(c) A pump may be operated, where necessary, for a temporary diversion. The pump outlet must be located and operated such that erosion or the discharge of sediment to the water is prevented.

NOTE: Guidance on the appropriate location of a diversion and materials which should be used for a stream diversion can be obtained from the on site Construction Manager.

(11) Wheeled or tracked equipment may not operate in the water. Equipment operating on the shore may reach into the water with a bucket or similar extension. Equipment may cross streams on rock, gravel or ledge bottom.

(12) All wheeled or tracked equipment that must travel or work in a vegetated wetland area must travel and work on mats or platforms.

(13) Any debris or excavated material must be stockpiled either outside the wetland or on mats or platforms. Hay bales or silt fence must be used, where necessary, to prevent sedimentation. Any debris generated during the activity must be prevented from washing downstream and must be removed from the wetland or water body. Disposal of debris must be in conformance with the Maine Hazardous Waste, Septage and Solid Waste Management Act, 38 M.R.S.A. Section 1301 et seq.

(14) Work below the normal high water line of a great pond, river, stream or brook must be done at low water except for emergency work or work agreed to by the resource agencies listed in paragraph 2 above. Measures, such as a silt boom or staked fencing, must be employed to reduce and isolate turbidity.

(15) Perimeter controls must be installed before the work starts. Disturbance of natural resources beyond the construction limits shown on the plans is not allowed under this rule.

NOTE: Guidance on the location of construction limits can be obtained from the on site Construction Manager.

(16) The use of untreated lumber is preferred. Lumber pressure treated with chromated copper arsenate (CCA) may be used, provided it is cured on dry land in a manner that exposes all surfaces to the air for a period of at least 21 days prior to construction. Wood treated with creosote or pentachlorophenol may not be used where it will contact water.

(17) A temporary road for equipment access must be constructed of crushed stone, blasted ledge, or similar materials that will not cause sedimentation or restrict fish passage. Such roads must be completely removed at the completion of the activity. In addition, any such temporary roads which are in rivers, streams or brooks, must allow for a passage of stormwater flows associated with a 10-year storm.

(18) Soil may not be disturbed during any period when soils are saturated due to rain or snow melt, except as necessary to protect work in progress or as required for bridge maintenance activities. Areas where soils are saturated (i.e. water drips from the soil when squeezed by hand, or the soil is capable of being rolled into a rod 1/8th inch in diameter that does not crumble) must be immediately mulched if they are disturbed.

(19) Disturbed soil must be protected within one week from the time it was last actively worked, and prior to any storm event, using temporary or permanent measures such as the placement of riprap, sod, mulch, erosion control blankets, or other comparable measures.

(20) Hay bale or straw mulch, where used, must be applied at a rate of at least one bale per 500 square feet (1 to 2 tons per acre).

(21) If mulch is likely to be moved because of steep slopes or wind exposure, it must be anchored with netting, peg and twine, binder or other suitable method and must be maintained until a catch of vegetation is established over the entire disturbed area.

(22) In addition to the placement of riprap, sod, erosion control blankets or mulch, additional steps must be taken where necessary to prevent sedimentation of the water Evidence of sedimentation includes visible sheet, rill or gully erosion, discoloration of water by suspended particles and/or slumping of banks. Silt fences, staked hay bales and other sedimentation control measures, where planned for, must be in place prior to the commencement of an activity, but must also be installed whenever necessary to prevent erosion and sedimentation.

NOTE: Guidance on the location and proper installation of erosion control measures can be obtained from the on site Construction Manager.

(23) Temporary erosion control measures must be maintained and inspected weekly until the site is permanently stabilized with vegetation or other permanent control measures. Erosion control measures must also be inspected immediately prior to and following storms.

(24) Permanent erosion control measures protecting all disturbed areas must be implemented within 30 days from the time the areas were last actively worked, or for fall and winter activities by the following June 15, except where precluded by the type of activity (e.g. riprap, road surfaces, etc.). The permanent erosion control measures must be maintained.

(25) The applicant shall immediately take appropriate measures to prevent erosion or sedimentation from occurring or to correct any existing problems, regardless of the time of year.

(26) Non-native species may not be planted in restored areas.

(27) Disposal of debris must be in conformance with Maine Hazardous Waste, Septage and Solid Waste Management Act, 38 M.R.S.A. Sections 1301 et seq.

(28) Disturbance of vegetation must be avoided, if possible. Where vegetation is disturbed outside of the area covered by any road or structure construction, it must be reestablished immediately upon completion of the activity and must be maintained.

(29) A vegetated area at least 25 feet wide must be established and maintained between any new stormwater outfall structure and the high water line of any open water body. A velocity reducing structure must be constructed at the outlet of the stormwater outfall that will create sheet flow of stormwater, and prevent erosion of soil within the vegetated buffer. If the 25 foot vegetated buffer is not practicable, the applicant must explain the reason for a lesser setback in writing. Approval from the DEP must be in writing and any recommendations must be incorporated into the activity.

**C. Definitions.** The following terms, as used in this chapter, have the following meanings, unless the context indicates otherwise:

(1) Diversion. A rerouting of a river, stream or brook to a location outside of its established channel.

(2) Fill. a. (verb) To put into or upon, supply to, or allow to enter a water body or wetland any earth, rock, gravel, sand, silt, clay, peat, or debris; b. (noun) Material, other than structures, placed in or immediately adjacent to a wetland or water body.

(3) Floodplain wetlands. Freshwater wetlands that are inundated with flood water during a 100-year flood event based on flood insurance maps produced by the Federal Emergency Agency or other site specific information.

(4) Riprap. Rocks that are fit into place, usually without mortar, on a slope as defined in the State of Maine, Department of Transportation, Standard Specifications for Highway and Bridges, revision of April 1995.

Applicant: General Public, State of Maine
Permit Number: NAE-2005-2164

Effective Date: October 11, 2005
Expiration Date: October 11, 2010

**DEPARTMENT OF THE ARMY**
**PROGRAMMATIC GENERAL PERMIT**
**STATE OF MAINE**

The New England District of the U.S. Army Corps of Engineers hereby issues a Programmatic General Permit (PGP) that expedites review of minimal impact work in coastal and inland waters and wetlands within the State of Maine.

# I. GENERAL CRITERIA

Activities with minimal impacts, as specified by the terms and conditions of this PGP and on the attached Appendix A, Definition of Categories, are either:

Category 1: Non-reporting. Eligible without screening (provided the authorizations are obtained which this permit states are necessary for activities to be eligible for authorization under this non-reporting category), or,

Category 2: Reporting. Require screening and a written determination of eligibility under the PGP by the Corps after coordination with the U.S. Fish and Wildlife Service (U.S. FWS), U.S. Environmental Protection Agency (EPA) and the National Marine Fisheries Service (NMFS).

This PGP does not affect the Corps Individual Permit review process or activities exempt from Corps jurisdiction.

# II. ACTIVITIES COVERED:

Work and structures that are located in, or that affect, navigable waters of the United States (U.S.) (Corps regulates under Section 10 of the Rivers and Harbors Act of 1899); the discharge of dredged of fill material into waters of the United States (Corps regulates under Section 404 of the Clean Water Act); and the transportation of dredged material for the purpose of disposal in the ocean (Corps regulates under Section 103 of the Marine Protection, Research and Sanctuaries Act).

# III. PROCEDURES:

## A. State Approvals

For projects authorized pursuant to this PGP, the following State approvals are also required. The applicable permits must be obtained in order for this PGP authorization to be valid (applicants are responsible for ensuring that all required State permits and approvals have been applied for and obtained):

- Maine Department of Environmental Protection (DEP): Natural Resources Protection Act (NRPA) permit, including permit-by-rule and general permit authorizations (NRPA permit issuance constitutes both the state permit and the WQC); Site Location of Development Act permit; and Maine Waterway Development and Conservation Act permit.
- Maine Department of Conservation: Land Use Regulation Commission (LURC) permit.
- Maine Department of Marine Resources: Lease.
- Maine Department of Conservation, Bureau of Parks and Lands, Submerged Lands: Lease

NOTE: This PGP may authorize projects that are not regulated by the State of Maine (e.g., seasonal floats or moorings).

## B. Corps Authorizations

### CATEGORY 1 (Non-Reporting)

**Eligibility Criteria**

Activities in Maine may proceed without application or notification to the Corps if they:

- Are subject to Corps jurisdiction (see General Condition 2, Page 7),
- Meet the definition of Category 1 in Appendix A - Definition of Categories, and
- Meet the General Conditions of the PGP (see Pages 7 - 15).

If the State or the Corps does not contact the applicant for DEP's Tier One permits during the DEP's Tier One 30-day review period, Corps approval may be assumed and the project may proceed. Refer to the Federal Screening Procedures (see Page 4) for additional information regarding screening.

Project proponents seeking Category 1 authorizations are not relieved of the obligation to comply with this PGP's General Conditions (see Page 7) and other Federal laws such as the National Historic Preservation Act, the Endangered Species Act (ESA) and the Wild and Scenic Rivers Act. Therefore, consultation with the Corps and/or outside experts such as the Maine Historic Preservation Commission and the appropriate Indian tribes is recommended when there is a high likelihood of the presence of resources of concern.

Although Category 1 projects are non-reporting, the Corps reserves the right to require screening under Category 2 or Individual Permit review if there are concerns for the aquatic environment or any other factor of the public interest (see General Condition 4, Discretionary Authority, Page 7).

Work that is not regulated by the State of Maine, but is subject to Corps jurisdiction, is eligible for Corps authorization under this PGP in accordance with the review thresholds and conditions contained herein. The Maine DEP and LURC have waived WQC for projects authorized under Categories 1 and 2 of this PGP and not subject to jurisdiction under the NRPA and LURC Land Use Districts and Standards.

**Enforcement cases**. This PGP does not apply to any existing or proposed activity in Corps jurisdiction associated with an on-going Corps or EPA enforcement action until such time as the enforcement action is resolved or the Corps determines that the activity may proceed independently without compromising the enforcement action. The Corps may choose not to accept applications or issue permits to any applicant with outstanding violations.

### CATEGORY 2 (Reporting – Requiring Screening)

**Eligibility Criteria**

Activities in Maine require written approval from the Corps if they:

- Are subject to Corps jurisdiction (see General Condition 2, Page 7),
- Meet the definition of Category 2 in Appendix A - Definition of Categories, and
- Meet the General Conditions of the PGP (see Pages 7 - 15),

These projects will be reviewed through interagency screening (see Federal Screening Procedures below) to determine whether such activities may be authorized under this PGP. To be eligible and

subsequently authorized, an activity must result in minimal impacts to the aquatic environment as determined by the Corps based on comments from the review team and the criteria listed above. Mitigation may be required to compensate for unavoidable impacts to ensure net effects of a project are minimal.

For Category 2 projects, applicants must obtain a written authorization from the Corps and State approvals as stated on Page 1.

To ensure compliance with the conditions of this PGP, consultation with the Corps and outside experts is required. This includes consultation with the Maine Historic Preservation Commission and the appropriate Native American Indian tribes to ensure compliance with Condition 8. Also, note the review thresholds under Category 2 apply to single and complete projects only (see General Condition 5).

**Enforcement cases**. See previous section.

**Application Procedures**

The Corps must review and approve in writing all Category 2 activities. Generally, the State will provide the Corps with a copy of State applications received, but it is ultimately the applicant's responsibility to ensure the Corps receives the application from the State. Therefore, it is recommended that applicants either verify with the Corps receipt of their application from the State (DEP or LURC), or apply directly to the Corps with either a copy of their State application or a Corps application (ENG Form 4345). Applicants must apply directly to the Corps using ENG Form 4345 if the work is not State regulated.

Upon receipt of the application, the Corps will determine if it:
(a) requires additional information (see "information typically required" on the following page);
(b) is appropriate for screening with the Federal resource agencies (see Category 2 Federal Screening Procedures on the following page);
(c) is ineligible under the terms and/or conditions of this PGP; or
(d) will require Individual Permit review, regardless of whether the terms and conditions of this PGP are met, based on concerns for the aquatic environment or any other factor of the public interest (see General Condition 4, Discretionary Authority).

If open water disposal is proposed, the Corps will make a suitability determination, fully coordinated with the Federal resource agencies, before coordinating a project at a joint processing meeting.

All Category 2 applicants shall submit a copy of their application materials to the Maine Historic Preservation Commission and the Indian tribe(s) listed on Page 17, at the same time, or before, they apply to the DEP, LURC, or the Corps, to be reviewed for the presence of historic, archaeological or tribal resources in the permit area that the proposed work may affect. Submittals to the DEP or Corps shall include information to indicate that this has been done (a copy of the applicant's cover letter to Maine Historic Preservation Commission and tribes or a copy of the Historic Preservation Commission and tribal response letters is acceptable).

**Information Typically Required**

The following information may not be necessary for all projects. Please see www.nae.usace.army.mil for a more comprehensive checklist. Select "Regulatory/Permitting," "Forms" and then "Application and Plan Guideline Checklist." Please check with our Maine office for project-specific requirements.

(a) purpose of project;
(b) 8½"x 11" locus map. 8½"x 11" plan views of the entire property, including property lines, and project limits with existing and proposed conditions;
(c) typical cross-section views of all wetland and waterway fill areas and wetland replication areas;
(d) legible, reproducible plans. Show mean low water (MLW), mean high water (MHW) and high tide line (HTL) elevations in navigable waters;
(e) each plan should show the NGVD 1929 equivalent for the project's vertical datum (MLW, MLLW, MHW, HTL or other tidal datum for tidal projects) with the vertical units. Do not use local datum;
(f) wetland delineation for the site, Corps wetland delineation data sheets (see web site), and calculations of waterway and wetland impact areas (see General Condition 2);
(g) delineation of submerged aquatic vegetation, e.g., eel grass beds, in tidal waters;
(h) volume, type and source of fill material to be discharged into waters and wetlands, including the area(s) (in square feet or acres) of fill in wetlands, below ordinary high water in inland waters and below the high tide line in coastal waters;
(i) limits of any Federal Navigation Project in the vicinity and State Plane Coordinates for the limits of the proposed work closest to the Federal Navigation Project;
(j) on-site alternatives analysis. Please contact Corps for guidance;
(k) identify and describe potential impacts to Essential Fish Habitat. See General Condition 11 and contact Corps for guidance;
(l) photographs of wetland/waterway to be impacted.

**Information typically required for dredging projects**:
(a) sediment testing, including physical (e.g., grain-size analysis), chemical and biological testing. For projects proposing open water disposal, applicants are encouraged to contact the Corps as early as possible regarding sampling and testing protocols. Sampling and testing of sediments without such contact should not occur and, if done, would be at the applicant's risk.
(b) the area in square feet and volume of material to be dredged below mean high water;
(c) existing and proposed water depths;
(d) type of dredging equipment to be used;
(e) nature of material (e.g., silty sand);
(f) any existing sediment grain size and bulk sediment chemistry data for the proposed or any nearby projects;
(g) information on the location and nature of municipal or industrial discharges and occurrence of any contaminant spills in or near the project area, location of the disposal site (include locus sheet);
(h) shellfish survey;
(i) identify and describe potential impacts to Essential Fish Habitat (see General Condition 11);
(j) delineation of submerged aquatic vegetation (e.g., eelgrass beds).

**Federal Screening Procedures**
The Corps will review all complete applications for Category 2 projects requiring Corps approval at interagency screening meetings (or "joint processing" meetings) with the Federal resource agencies (U.S. FWS, EPA and NMFS) to determine whether such activities may be authorized under this PGP. The Federal resource agencies will comprise the interagency review team. The meetings are held at the Corps every three weeks, or coordinated as necessary to provide applicants with a timely response. The Corps and Federal resource agencies, at the branch chief or equivalent level, may agree on certain activities that do not need to be coordinated at these meetings.

If the Corps and Federal resource agencies determine that the activity is eligible for the PGP, the Corps will send an authorization letter directly to the applicant. The Corps will generally issue an eligibility determination within the State's review period, not to exceed 60 days. If the Corps determines that the activity is not eligible under the PGP or that additional information is required, the Corps will notify the applicant in writing and will send a copy of this notification to DEP or LURC.

For projects reviewed with the Federal resource agencies, the agencies may recommend, within ten business days, either 1) special conditions for projects to avoid or minimize adverse environmental effects and to ensure the terms and conditions of the PGP are met, or 2) Individual Permit review. The Corps will determine that a project is ineligible under this PGP and will begin its Individual Permit review procedures if any one of the Federal resource agencies, within ten business days of the screening meeting, expresses a concern within their area of expertise, states the resource or species that could be impacted by the project, and describes the impacts that, either individually or cumulatively, will be more than minimal.

This ten-day notice may be spoken and is not required to be fully documented, but must be confirmed with a written response within an additional ten working days from the date of the spoken comment. Written responses must be signed by the Federal resource agency field supervisor or branch chief, as appropriate, and must identify the affected resource within their area of expertise. The intent of the spoken notification is to allow the Corps to give timely notification to the applicant that additional information is needed and/or an Individual Permit may be required. The Corps may reinstate a project's eligibility under the PGP provided the Federal agencies' concerns are satisfied. The Federal resource agencies may request additional information within their area of expertise within ten business days of the screening meeting. This information shall be commensurate to the level of impact and agreed upon by the Corps. The agencies are allowed an additional ten business days after their receipt of additional information to provide special conditions or a written Individual Permit request to the Corps.

If the applicant is unable to resolve the concerns, the Corps, independently or at the request of the Federal resource agencies, will require an Individual Permit for the project. The applicant will be notified of this in writing, along with information about submitting the necessary application materials.

**Minerals Management Service (MMS) Review**

Projects with construction of solid fill structures or discharge of fill that may extend beyond the coastline or the baseline from which the territorial sea is measured (i.e., mean low water), must be coordinated with Minerals Management Service (MMS), Outer Continental Shelf (OCS) Survey Group, pursuant to the Submerged Lands Act (43 USC, Section 1301-1315, 33 CFR 320.4(f)). The Corps will forward project information to MMS for their review. The MMS will coordinate their determination with the Department of the Interior (DOI) Solicitor's Office. The DOI will have 15 calendar days from the date MMS is in receipt of project information to determine if the baseline will be affected. No notification to the Corps within 15-day review period will constitute a "no effect" determination. Otherwise, the solicitor's notification to the Corps may be spoken but must be followed with a written confirmation within ten business days from the date of the spoken notification. This procedure will be eliminated if the State of Maine provides a written waiver of interest in any increase in submerged lands caused by a change in the baseline resulting from solid fill structures or fills authorized under this PGP.

Emergency Situations Procedures

Emergency situations are limited to sudden, unexpected occurrences that could potentially result in an unacceptable hazard to life, a significant loss of property, or an immediate, unforeseen, and significant economic hardship if corrective action requiring a permit is not undertaken within a time period less than the normal time needed to process an application under standard procedures. If an emergency situation requires action in less than 30 days after the occurrence, it qualifies for the amended notification procedures described below.

Notification Procedures for Emergency Situations:

Any project proponent may request emergency authorization from the Corps, however the Corps will determine if a project qualifies for these emergency situation procedures. The Federal resource agencies, the Maine Historic Preservation Commission and the tribes will each designate an emergency contact and an alternate in the event the regular contact is unavailable. When an application for Category 2 work is received that the Corps determines is an "emergency" as defined above, the Corps will fax a copy of the plans and Determination of Eligibility to the agency representatives and their alternates. The resource agencies would then have 16 business hours to notify the Corps if they have any comments on authorization of the project under the PGP. Objections to the Corps determination of an "emergency" situation will not be accepted. If no response is received within 16 business hours, the Corps will proceed with a decision on the application. If the resource agencies have comments on the proposal, they will have 16 business hours to put their comments in writing. If written comments from the Federal agencies are not received within 16 business hours, the Corps will proceed with a decision on the application.

If a Federal agency requests that an Individual Permit be required for a project or requests modifications to the project based on concerns within their area(s) of expertise, the Corps will notify the applicant within one business day of receipt of that request that the project as proposed does not qualify for authorization under this PGP and the emergency Individual Permit procedures may be followed. In any event, the Corps will notify the applicant within 16 business hours of commencement of the screening process as to whether the project may proceed under this PGP.

## IV. CORPS AUTHORIZATION: INDIVIDUAL PERMIT

Work that is defined in the Individual Permit category of Appendix A – Definition of Categories, or that does not meet the terms and conditions of this PGP, will require an application for an Individual Permit from the Corps (see 33 CFR Part 325.1). The screening procedures outlined for Category 2 projects will only serve to delay project review in such cases. The applicant should submit the appropriate application materials (including the Corps application form) at the earliest possible date. General information and application forms can be obtained at our web site or by calling us (see Page 16). Individual water quality certification and coastal zone management consistency concurrence are required when applicable from the State of Maine before Corps permit issuance. The Federal resource agencies' comments are due within ten working days after the Public Notice's expiration date, unless the Corps receives and approves a written request for a time extension within ten working days after the notice's expiration.

## V. PROGRAMMATIC GENERAL PERMIT CONDITIONS:

The following conditions apply to activities authorized under this Maine PGP, including all Category 1 (non-reporting) and Category 2 (reporting – requiring screening) activities:

### General Requirements

**1. Other Permits.** Authorization under this PGP does not obviate the need to obtain other Federal, State, or local authorizations required by law. This includes, but is not limited to, the project proponent obtaining a Flood Hazard Development Permit issued by the town, if necessary. Inquiries may be directed to the municipality or to the Maine Floodplain Management Coordinator at (207) 287-8063. See http://www.maine.gov.

**2. Federal Jurisdictional Boundaries.** Applicability of this PGP shall be evaluated with reference to Federal jurisdictional boundaries. Applicants are responsible for ensuring that the boundaries used satisfy the Federal criteria defined at 33 CFR 328-329. These sections prescribe the policy, practice and procedures to be used in determining the extent of jurisdiction of the Corps concerning "waters of the U.S." and "navigable waters of the U.S." Wetland boundaries shall be delineated in accordance with the January 1987 Corps of Engineers Wetlands Delineation Manual, located at http://www.usace.army.mil/inet/functions/cw/cecwo/reg/ wlman87.pdf. The U.S. FWS publishes the National List of Plant Species that Occur in Wetlands, located at http://www.nwi.fws.gov. The Natural Resources Conservation Service (NRCS) develops the hydric soil definition and criteria, and publishes the current hydric soil lists, located at http://soils.usda.gov/use/hydric/.

**3. Minimal Effects.** Projects authorized by this PGP shall have no more than minimal individual and cumulative adverse environmental impacts as determined by the Corps.

**4. Discretionary Authority.** Notwithstanding compliance with the terms and conditions of this permit, the Corps retains discretionary authority to require Category 2 or Individual Permit review based on concerns for the aquatic environment or for any other factor of the public interest [33 CFR 320.4(a)]. This authority is invoked on a case-by-case basis whenever the Corps determines that the potential consequences of the proposal warrant Individual Permit review based on the concerns stated above. This authority may be invoked for projects with cumulative environmental impacts that are more than minimal or if there is a special resource or concern associated with a particular project that is not already covered by the remaining conditions of the PGP and that warrants greater review. Whenever the Corps notifies an applicant that an Individual Permit may be required, authorization under this PGP is void and no work may be conducted until the individual Corps permit is obtained or until the Corps notifies the applicant that further review has demonstrated that the work may proceed under this PGP.

**5. Single and Complete Projects.** This PGP shall not be used for piecemeal work and shall be applied to single and complete projects. All components of a single project shall be treated together as constituting one single and complete project and/or all planned phases of a multi-phased project (e.g., subdivisions should include all work such as roads, utilities, and lot development) unless the Corps determines that a component has independent utility. (The *Independent Utility* test is used to determine what constitutes a single and complete project in the Corps regulatory program. A project is considered to have independent utility if it would be constructed absent the construction of other projects in the project area. Portions of a multi-phase project that depend upon other phases of the project do not have independent utility. Phases of a project that would be constructed even if the other phases were not built can be considered as separate single and complete projects with independent utility.) For linear projects, such as power lines or pipelines with multiple

crossings, the "single and complete project" (i.e., single and complete crossing) will apply to each crossing of a separate water of the U.S. (i.e., single waterbody) at that location; except that for linear projects crossing a single waterbody several times at separate and distant locations, each crossing is considered a single and complete project, and may be reviewed for Category 1 eligibility. (However, individual channels in a braided stream or river, or individual arms of a large, irregularly-shaped wetland or lake, etc., are not separate waterbodies.) If any crossing requires a Category 2 activity, then the entire linear project shall be reviewed as one project under Category 2. Also, this PGP shall not be used for any activity that is part of an overall project for which an Individual Permit is required, unless the Corps determines the activity has independent utility.

**6. Permit On-Site.** For Category 2 projects, the permittee shall ensure that a copy of this PGP and the accompanying authorization letter are at the work site (and the project office) authorized by this PGP whenever work is being performed, and that all personnel with operation control of the site ensure that all appropriate personnel performing work are fully aware of its terms and conditions. The entire permit authorization shall be made a part of any and all contracts and sub-contracts for work that affects areas of Corps jurisdiction at the site of the work authorized by this PGP. This shall be achieved by including the entire permit authorization in the specifications for work. The term "entire permit authorization" means this PGP and the authorization letter (including its drawings, plans, appendices and other attachments) and also includes permit modifications. If the authorization letter is issued after the construction specifications, but before receipt of bids or quotes, the entire permit authorization shall be included as an addendum to the specifications. If the authorization letter is issued after receipt of bids or quotes, the entire permit authorization shall be included in the contract or sub-contract as a change order. Although the permittee may assign various aspects of the work to different contractors or sub-contractors, all contractors and sub-contractors shall be obligated by contract to comply with all environmental protection provisions contained within the entire PGP authorization, and no contract or sub-contract shall require or allow unauthorized work in areas of Corps jurisdiction.

**National Concerns**

**7. St. John/St. Croix Rivers.** This covers work within the Saint John and Saint Croix River basins that requires approval of the International Joint Commission. This includes any temporary or permanent use, obstruction or diversion of international boundary waters which could affect the natural flow or levels of waters on the Canadian side of the line, as well as any construction or maintenance of remedial works, protective works, dams, or other obstructions in waters downstream from boundary waters when the activity could raise the natural level of water on the Canadian side of the boundary.

**8. Historic Properties**. Any activity authorized by this PGP shall comply with Section 106 of the National Historic Preservation Act. Information on the location and existence of historic resources can be obtained from the Maine Historic Preservation Commission, the National Register of Historic Places, and the Penobscot, Passamaquoddy, Micmac, and Maliseet Tribal Historic Preservation Officers. See Page 17 for historic properties contacts. If the permittee, either prior to construction or during construction of the work authorized herein, encounters a previously unidentified archaeological or other cultural resource, within the area subject to Department of the Army jurisdiction, that might be eligible for listing in the National Register of Historic Places, he/she shall stop work and immediately notify the District Engineer and the Maine Historic Preservation Commission and/or applicable Tribe(s).

**9. National Lands**. Activities authorized by this PGP shall not impinge upon the value of any National Wildlife Refuge, National Forest, National Marine Sanctuary, National Park or any other area administered by the National Park Service.

**10. Endangered Species**. No activity may be authorized under this PGP which:

- is likely to adversely affect a threatened or endangered species, a proposed species, designated critical habitat, or proposed critical habitat as identified under the Federal ESA,
- would result in a "take" of any threatened or endangered species of fish or wildlife, or
- would result in any other violation of Section 9 of the ESA protecting threatened or endangered species of plants.

Applicants shall notify the Corps if any listed species or critical habitat, or proposed species or critical habitat, is in the vicinity of the project and shall not begin work until notified by the District Engineer (DE) that the requirements of the ESA have been satisfied and that the activity is authorized. Information on the location of threatened and endangered species and their critical habitat can be obtained from the U.S. FWS and NMFS (see Page 16 for addresses).

**11. Essential Fish Habitat**. As part of the PGP screening process, the Corps will coordinate with NMFS in accordance with the 1996 amendments to the Magnuson-Stevens Fishery Conservation and Management Act to protect and conserve the habitat of marine, estuarine and anadromous finfish, mollusks, and crustaceans. This habitat is termed "Essential Fish Habitat (EFH)", and is broadly defined to include "those waters and substrate necessary to fish for spawning, breeding, feeding, or growth to maturity." Applicants may be required to describe and identify potential impacts to EFH. Conservation recommendations made by NMFS will normally be included as a permit requirement by the Corps. For additional information, see the EFH regulations at 50 CFR Part 600 (http://www.nmfs.noaa.gov). Additional information on the location of EFH can be obtained from NMFS (see Page 16 for contact information).

Any work in any aquatic habitat in the following rivers and streams, including all tributaries to the extent that they are currently or were historically accessible for salmon migration, shall not be authorized under Category 1 of the PGP and must be screened for potential impacts to EFH.

| | | | |
|---|---|---|---|
| Androscoggin River | Hobart Stream | Passagassawaukeag River | Saco River |
| Aroostook River | Kennebec River | Patten Stream | Sheepscot River |
| Boyden River | Machias River | Penobscot River | St. Croix River |
| Dennys River | Narraguagus River | Pleasant River | Tunk Stream |
| Ducktrap River | Orland River | Presumpscot River | Union River |
| East Machias River | | | |

**12. Wild and Scenic Rivers**. Any activity that occurs in a component of, or within 0.25 mile up or downstream of, the main stem or tributaries of a river segment of the National Wild and Scenic River System, must be reviewed by the Corps under the procedures of Category 2 of this PGP regardless of size of impact. This condition applies to both designated Wild and Scenic Rivers and rivers designated by Congress as study rivers for possible inclusion while such rivers are in an official study status. The Corps will consult with the National Park Service (NPS) with regard to potential impacts of the proposed work on the resource values of the Wild and Scenic River. The culmination of this coordination will be a determination by the NPS and the Corps that the work: (1) may proceed as proposed; (2) may proceed with recommended conditions; or (3) could pose a direct and adverse effect on the resource values of the river and an individual permit is required. If

preapplication consultation between the applicant and the NPS has occurred whereby NPS has made a determination that the proposed project is appropriate for authorization under this PGP (with respect to Wild and Scenic River issues), this determination should be furnished to the Corps with submission of the application. (See NPS address on Page 16.) National Wild and Scenic Rivers System segments for Maine as of September 2005 include: Allagash River beginning at Telos Dam continuing to Allagash checkpoint at Eliza Hole Rapids, approximately 3 miles upstream of the confluence with the St. John River (length = 92 miles).

**13. Federal Navigation Project.** Any structure or work that extends closer to the horizontal limits of any Corps Federal Navigation Project (See Appendix B) than a distance of three times the project's authorized depth shall be subject to removal at the owner's expense prior to any future Corps dredging or the performance of periodic hydrographic surveys.

**14. Navigation.** (a) There shall be no unreasonable interference with navigation by the existence or use of the activity authorized herein and no attempt shall be made by the permittee to prevent the full and free use by the public of all navigable waters at or adjacent to the activity authorized herein. (b) The permittee understands and agrees that, if future operations by the United States require the removal, relocation, or other alteration, of the structure or work herein authorized, or if, in the opinion of the Secretary of the Army or his authorized representative, said structure or work shall cause unreasonable obstruction to the free navigation of the navigable waters, the permittee will be required, upon due notice from the Corps of Engineers, to remove, relocate, or alter the structural work or obstructions caused thereby, without expense to the United States. No claim shall be made against the United States on account of any such removal or alteration.

**15. Federal Liability.** In issuing this permit, the Federal Government does not assume any liability for the following: (a) damages to the permitted project or uses thereof as a result of other permitted or unpermitted activities or from natural causes; (b) damages to the permitted project or uses thereof as a result of current or future activities undertaken by or on behalf of the United States (U.S.) in the public interest; (c) damages to persons, property, or to other permitted or unpermitted activities or structures caused by the activity authorized by this permit; (d) design or construction deficiencies associated with the permitted work; (e) damage claims associated with any future modification, suspension, or revocation of this permit.

**Minimization of Environmental Impacts**

**16. Minimization.** Discharges of dredged or fill material into waters of the United States, including wetlands, shall be avoided and minimized to the maximum extent practicable. Permittees may only fill those jurisdictional wetlands that the Corps authorizes to be filled and impact those wetlands that the Corps authorizes as secondary impacts. For coastal structures such as piers and docks, the height above the marsh at all points should be equal to or exceed the width of the deck. The height shall be measured from the marsh substrate to the bottom of the longitudinal support beam. This will help ensure sunlight reaches the area beneath the structure.

**17. Heavy Equipment in Wetlands.** Heavy equipment, other than fixed equipment (drill rigs, fixed cranes, etc.), working within wetlands shall not be stored, maintained or repaired in wetlands unless it is less environmentally damaging otherwise, and as much as possible shall not be operated there. Where construction requires heavy equipment operation in wetlands, the equipment shall

either have low ground pressure (<3 psi), or shall not be located directly on wetland soils and vegetation; it shall be placed on swamp or timber mats that are adequate to support the equipment in such a way as to minimize disturbance of wetland soil and vegetation. (See General Condition 18 below.) Other support structures that are less impacting and are capable of safely supporting equipment may be used with written Corps authorization. Similarly, not using mats during frozen, dry or other conditions may be allowed with written Corps authorization. An adequate supply of spill containment equipment shall be maintained on site.

NOTE: "Swamp mats" is a generic term used to describe structures that distribute equipment weight to prevent wetland damage while facilitating passage and providing work platforms for workers and equipment. They are comprised of sheets or mats made from a variety of materials in various sizes, and they include large timbers bolted or cabled together (timber mats). Corduroy roads, which are not considered to be swamp mats, are cut trees and/or saplings with the crowns and branches removed, and the trunks lined up next to one another.

**18. Temporary Fill.** Fill placed into waters of the U.S. (including wetlands) totaling greater than or equal to 4,300 SF (15,000 SF if a DEP Tier One Permit is issued) in total area (i.e., the sum of permanent and temporary fill areas) exceeds the Category 1 threshold and may not be discharged without written authorization from the Corps. When temporary fill is used (e.g., access roads, swamp mats, cofferdams), it shall be stabilized and maintained during construction in such a way as to prevent soil eroding into portions of waters of the U.S. where it is not authorized. Swamp or timber mats (see Gen.Cond. 17 above) are considered as temporary fill when they are removed immediately upon work completion. The area must be restored in accordance with Gen.Cond. 19.

- Unconfined temporary fill authorized for discharge into flowing water (rivers and streams) shall consist only of clean washed stone.
- Temporary fill authorized for discharge into wetlands shall be placed on geotextile fabric laid on the pre-construction wetland grade. (Swamp and timber mats are excluded from this requirement.)
- Temporary fill shall be removed as soon as it is no longer needed, and it shall be disposed of at an upland site and suitably contained to prevent subsequent erosion into waters of the U.S.
- Waters of the U.S. where temporary fill was discharged shall be restored (see Gen.Cond. 19).
- No temporary work shall drain a water of the U.S. by providing a conduit for water on or below the surface.

**19. Restoration.**

- Upon completion of construction, all disturbed wetland areas (the disturbance of these areas must be authorized) shall be stabilized with a wetland seed mix containing only plant species native to New England.
- The <u>introduction</u> or <u>spread</u> of invasive plant species in disturbed areas shall be controlled.
- In areas of authorized temporary disturbance, if trees are cut they shall be cut at ground level and not uprooted in order to prevent disruption to the wetland soil structure and to allow stump sprouts to revegetate the work area, unless otherwise authorized.
- Wetland areas where permanent disturbance is not authorized shall be restored to their original condition and elevation, which under no circumstances shall be higher than the pre-construction elevation. Original condition means careful protection and/or removal of existing soil and vegetation, and replacement back to the original location such that the original soil layering and vegetation schemes are approximately the same, unless otherwise authorized.

**20. Coastal Bank Stabilization.** Projects involving construction or reconstruction/maintenance of bank stabilization structures within Corps jurisdiction should be designed to minimize environmental effects, effects to neighboring properties, scour, etc. to the maximum extent practicable. For example, vertical bulkheads should only be used in situations where reflected wave energy can be tolerated. This generally eliminates bodies of water where the reflected wave energy may interfere with or impact on harbors, marinas, or other developed shore areas. A revetment is sloped and is typically employed to absorb the direct impact of waves more effectively than a vertical seawall. It typically has a less adverse effect on the beach in front of it, abutting properties and wildlife. For more information, see the Corps Coastal Engineering Manual (supersedes the Shore Protection Manual), located at http://chl.erdc.usace.army.mil. Select "Products/ Services," "Publications." Part 5, Chapter 7-8, a(2)c is particularly relevant.

**21. Sedimentation and Erosion Control.** Adequate sedimentation and erosion control management measures, practices and devices, such as phased construction, vegetated filter strips, geotextile silt fences, hay bales or other devices, shall be installed and properly maintained to reduce erosion and retain sediment on-site during and after construction. They shall be capable of preventing erosion, of collecting sediment, suspended and floating materials, and of filtering fine sediment. These devices must be removed in a timely manner upon completion of work, but not until the disturbed areas have been stabilized. The sediment collected by these devices shall be removed and placed at an upland location in a manner that will prevent its later erosion into a waterway or wetland. All exposed soil and other fills shall be permanently stabilized at the earliest practicable date.

**22. Waterway Crossings.**
(a) All temporary and permanent crossings of waterbodies (waterways and wetlands) shall be suitably culverted, bridged, or otherwise designed to withstand and to prevent the restriction of high flows, to maintain existing low flows, and to not obstruct the movement of aquatic life indigenous to the waterbody beyond the actual duration of construction. (NOTE: Areas of fill and/or cofferdams must be included in total waterway/wetlands impacts to determine applicability of this PGP).
(b) Aquatic Life Movements. No activity may substantially disrupt the necessary life-cycle movements of those species of aquatic life indigenous to the waterbody, including those species that normally migrate through the area, unless the activity's primary purpose is to impound water. For new permanent crossings, open bottom arches, bridge spans or embedded culverts are generally preferred over traditional culverts and should be installed when practicable. Coordination with the Corps is recommended for Category 1 projects when site constraints (e.g., placing footings) may render open bottom arches, bridge spans or embedded culverts impractical. In these cases, well-designed culverts may actually perform better. Culverts shall be installed with their inverts embedded below existing streambed grade to avoid "hanging" and associated impediments to fish passage. The "Design of Road Culverts for Fish Passage" provides design guidance and is available at www.nae.usace.army.mil, "Regulatory/Permitting," "Other."
(c) Culverts at waterbody crossings shall be installed in such a manner as to preserve hydraulic connectivity, at its present level, between the wetlands on either side of the road. The permittee shall take necessary measures to correct wetland damage due to lack of hydraulic connectivity.
(d) Culverts and bridges shall span the waterway a minimum of 1.2 times the bankfull width in probable fish bearing waterways to qualify as a Category 1 non-reporting activity. See "Design of Road Culverts for Fish Passage," referenced in (b) above, for information on bankfull width.

(e) Projects using slip lining (retrofitting an existing culvert by inserting a smaller diameter pipe), plastic pipes, and High Density Polyethylene Pipes (HDPP) are not allowed as non-reporting Category 1 activities, either as new work or maintenance activities.
(f) Waterbody crossings shall be culverted to at least municipal or State standards. The Maine DEP's stream crossing standards are at 06-096, Chapter 305: Permit by Rule, Section 10. Stream crossings (bridges, culverts and fords).
(g) Waterway crossings proposed by the Maine Dept. of Transportation should conform to the MDOT Fish Passage Policy and Design Guides.
(h) Construction equipment shall not cross streams without the use of temporary bridges, culverts, or cofferdams.
(i) For projects that otherwise meet the terms of Category 1, in-stream construction work shall be conducted during the low flow period July 15 - October 1 in any year. Projects that are not to be conducted during that time period are ineligible for Category 1 and shall be screened pursuant to Category 2, regardless of the waterway and wetland fill and/or impact area.

**23. Discharge of Pollutants.** All activities involving any discharge of pollutants into waters of the U.S. authorized under this PGP shall be consistent with applicable water quality standards, effluent limitations, standards of performance, prohibitions, and pretreatment standards and management practices established pursuant to the CWA (33 USC 1251) and applicable State and local laws. If applicable water quality standards, limitations, etc., are revised or modified during the term of this PGP, the authorized work shall be modified to conform with these standards within six months of the effective date of such revision or modification, or within a longer period of time deemed reasonable by the District Engineer in consultation with the Regional Administrator of the EPA. Applicants may presume that State water quality standards are met with the issuance of a LURC or DEP NRPA permit.

**24. Spawning Areas.** Discharges of dredged or fill material, and/or suspended sediment producing activities in fish and shellfish spawning or nursery areas and amphibian and waterfowl breeding areas during spawning or breeding seasons shall be avoided. During all times of year, impacts to these areas shall be avoided or minimized to the maximum extent practicable.

**25. Storage of Seasonal Structures.** Coastal structures, such as pier sections and floats, that are removed from the waterway for a portion of the year (often referred to as seasonal structures) shall be stored in an upland location located above mean high water (MHW) and not in tidal wetlands. These seasonal structures may be stored on the fixed, pile-supported portion of the structure that is seaward of MHW. This is intended to prevent structures from being stored on the marsh substrate and the substrate seaward of MHW. Seasonal storage of structures in navigable waters, e.g., in a protected cove on a mooring, requires Corps and local harbormaster approval.

**26. Environmental Functions and Values.** The permittee shall make every reasonable effort to carry out the construction or operation of the work authorized herein in a manner so as to maintain as much as is practicable, and minimize any adverse impacts on existing fish, wildlife, and natural environmental functions and values.

**27. Protection of Vernal Pools.** Impacts to uplands in proximity (within 500 feet) to the vernal pools referenced in Appendix A - Definitions of Categories, shall be minimized to the maximum extent possible.

## Procedural Conditions

**28. Cranberry Development Projects.** For cranberry development projects authorized under the PGP, the following conditions apply:

- If a cranberry bog is abandoned for any reason, the area must be allowed to revert to natural wetlands unless an Individual Permit is obtained from the Corps allowing the discharge of fill for an alternate use.
- No stream diversion shall be allowed under this permit.
- No impoundment of perennial streams shall be allowed under this permit.
- The project shall be designed and constructed to not cause flood damage on adjacent properties.

**29. Inspections.** The permittee shall allow the District Engineer (DE) or his authorized representative(s) to make periodic inspections at any time deemed necessary in order to ensure that the work is being performed in accordance with the terms and conditions of this permit. The DE may also require post-construction engineering drawings for completed work and post-dredging survey drawings for any dredging work.

**30. Work Start Notification Form and Compliance Certification.** Every permittee who receives a written Category 1 or 2 PGP authorization from the Corps must submit a 1) Work Start Notification Form (WSNF) two weeks before work commencement, and 2) signed Compliance Certification Form within one month following the completion of the authorized work and any required mitigation (but not mitigation monitoring, which requires separate submittals). The Corps will forward the blank WSNF and Compliance Certification Form with the authorization letter. The Compliance Certification Form will include: (a) a statement that the authorized work was done in accordance with the Corps authorization, including any general or specific conditions; (b) a statement that any required mitigation was completed in accordance with the permit conditions; and (c) the signature of the permittee certifying the completion of the work and mitigation.

**31. Maintenance.** The permittee shall maintain the work or structures authorized herein in good condition and in conformance with the terms and conditions of this permit. This does not include maintenance of dredging projects. Maintenance dredging is subject to the review thresholds in Appendix A and/or any conditions included in a written Corps authorization. Maintenance dredging includes only those areas and depths previously authorized and dredged. Some maintenance activities may not be subject to regulation under Section 404 in accordance with 33 CFR 323.4(a)(2).

**32. Property Rights.** This permit does not convey any property rights, either in real estate or material, or any exclusive privileges, nor does it authorize any injury to property or invasion of rights or any infringement of Federal, State, or local laws or regulations. If property associated with work authorized by the PGP is sold, the PGP authorization is automatically transferred to the new property owner. The new property owner should provide this information to the Corps in writing. No acknowledgement from the Corps is necessary.

**33. Modification, Suspension, and Revocation.** This permit may be either modified, suspended, or revoked, in whole or in part, pursuant to the policies and procedures of 33 CFR 325.7. Any such action shall not be the basis for any claim for damages against the United States.

**34. Restoration.** The permittee, upon receipt of a notice of revocation of authorization under this permit, shall restore the wetland or waterway to its former condition without expense to the United States and as directed by the Secretary of the Army or his authorized representative. If the permittee fails to comply with such a directive, the Secretary or his designee may restore the wetland or waterway to its former condition, by contract or otherwise, and recover the cost from the permittee.

**35. Special Conditions.** The Corps, independently or at the request of the Federal resource agencies, may impose other special conditions on a project authorized pursuant to this general permit that are determined necessary to minimize adverse environmental effects or based on any other factor of the public interest. Failure to comply with all conditions of the authorization, including special conditions, will constitute a permit violation and may subject the permittee to criminal, civil, or administrative penalties or restoration.

**36. False or Incomplete Information.** If the Corps makes a determination regarding the eligibility of a project under this permit and subsequently discovers that it has relied on false, incomplete, or inaccurate information provided by the permittee, the permit shall not be valid and the government may institute appropriate legal proceedings.

**37. Abandonment.** If the permittee decides to abandon the activity authorized under this general permit, unless such abandonment is merely the transfer of property to a third party, he/she must restore the area to the satisfaction of the District Engineer.

**Duration of Authorization/Grandfathering:**

**38. Duration of Authorization.** This PGP expires five years from the effective date listed at the top of Page 1. Activities authorized under Category 1 of this PGP that have commenced (i.e., are under construction) or are under contract to commence in reliance upon this PGP's authorization will remain authorized provided the activity is completed within 12 months of the PGP's expiration date. Activities authorized under Category 2 of this PGP will remain authorized in accordance with the project-specific date that the Corps provides to the permittee in the PGP authorization letter, unless:
(a) The PGP is either modified or revoked, or
(b) Discretionary authority has been exercised on a case-by-case basis to modify, suspend, or revoke the authorization in accordance with 33 CFR 325.2 (e)(2).

**39. Previously Authorized Activities.**
(a) Activities completed under the authorizations of past PGPs that were in effect at the time the activity was completed will continue to be authorized by those PGPs.
(b) Completed projects that have received written verification or approval from the Corps, based on applications made to the Corps prior to issuance of this PGP or the previous nationwide permits, regional general permits, or letters of permission shall remain authorized as specified in each authorization.
(c) Activities authorized pursuant to 33 CFR Part 330.3 ("Activities occurring before certain dates") are not affected by this PGP.

## VI. CONTACTS FOR MAINE PROGRAMMATIC GENERAL PERMIT:

### 1. FEDERAL

*U.S. Army Corps of Engineers*
Maine Project Office
675 Western Avenue #3
Manchester, Maine 04351
(207) 623-8367
(207) 623-8206 (fax)

*Federal Endangered Species*
U.S. Fish and Wildlife Service
Maine Field Office
1168 Main Street
Old Town, Maine 04468
(207) 827-5938
207-827-6099 (fax)

*Federal Endangered Species & Essential Fish Habitat*
National Marine Fisheries Service
One Blackburn Drive
Gloucester, Massachusetts 01939
(978) 281-9102
(978) 281-9301 (fax)

*Wild and Scenic Rivers*
National Park Service
North Atlantic Region
15 State Street
Boston, Massachusetts 02109
(617) 223-5203

*Bridge Permits*
Commander (obr)
First Coast Guard District
One South Street - Battery Bldg
New York, New York 10004
(212) 668-7021

### 2. STATE OF MAINE

*Maine Department of Environmental Protection*
*(For State Permits & Water Quality Certifications)*
Division of Land Resource Regulation
Bureau of Land and Water Quality
17 State House Station
Augusta, Maine 04333
(207) 287-2111

Southern Maine Regional Office
312 Canco Road
Portland, Maine 04103
(201) 822-6300

Eastern Maine Regional Office
106 Hogan Road
Bangor, Maine 04401
(207) 941-4570

Northern Maine Regional Office
1235 Central Drive - Skyway Park
Presque Isle, Maine 04769
(207) 764-0477

*Maine Land Use Regulation Commission (LURC)*
[call (800) 452-8711 for appropriate LURC office]
22 State House Station
Augusta, ME 04333-0022
(207) 287-2631
(207) 287-7439 (fax)

45 Radar Road
Ashland, ME 04732-3600
(207) 435-7963
(207) 435-7184 (fax)

Lakeview Drive
P.O. Box 1107
Greenville, ME 04441
(207) 695-2466
(207) 695-2380 (fax)

*(For CZM Determinations)*
State Planning Office
Coastal Program
184 State Street
State House Station 38
Augusta, Maine 04333
(207) 287-1009

*(For Submerged Lands Leases)*
Maine Department of Conservation
Bureau of Parks and Lands
22 State House Station
Augusta, Maine 04333
(207) 287-3061

191 Main Street
East Millinocket, ME 04430
(207) 746-2244
(207) 746-2243

*(For Aquaculture Leases)*
Maine Department of Marine Resources
P.O. Box 8
West Boothbay Harbor, Maine 04575
(207) 633-9500

## 3. HISTORIC PROPERTIES

*Maine Historic Preservation Commission*
State House Station 65
Augusta, Maine 04333-0065
(207) 287-2132
(207) 287-2335 (fax)

*Aroostook Band of Micmacs*
Attn: Mr. Williams Phillips, Chief
7 Northern Road
Presque Isle, Maine 04769
(207) 764-1972
(207) 764-7667 (fax)

*Houlton Band of Maliseet Indians*
Attn: Tribal Chief
88 Bell Road
Littleton, Maine 04730
(207) 532-4273, x215
(207) 532-2660 (fax)

*Passamaquoddy Tribe of Indians*
Pleasant Point Reservation
Attn: Tribal Council
P.O. Box 343
Perry, Maine 04667
(207) 853-2600
*(207) 853-6039 (fax)*

*Passamaquoddy Tribe of Indians*
Indian Township Reservation
Attn: Donald Soctomah, THPO
P.O. Box 301
Princeton, Maine 04668
(207) 796-2301
(207) 796-5256 (fax)

*Penobscot Indian Nation*
Indian Island Reservation
Attn: Ms. Bonnie Newsom, THPO
12 Wabanaki Way
Indian Island, Maine 04468
(207) 817-7471
(207) 817-7450 (fax)

## 4. ORGANIZATIONAL WEBSITES:

| | |
|---|---|
| Army Corps of Engineers | www.nae.usace.army.mil (click "Regulatory/Permitting") |
| Corps of Engineers Headquarters | www.usace.army.mil (click "Services for the Public") |
| Environmental Protection Agency | www.epa.gov/owow/wetlands/ |
| National Marine Fisheries Service | www.nmfs.noaa.gov |
| U.S. Fish and Wildlife Service | www.fws.gov |
| National Park Service | www.nps.gov/rivers/index.html |
| State of Maine | www.maine.gov |
| State of Maine -Aquaculture Guidelines | www.maine.gov/dmr/aquaculture/index.htm |

for Christine J Gray 10-11-05
District Engineer Date

# APPENDIX A: DEFINITION OF CATEGORIES

| A. INLAND WATERS AND WETLANDS | **Inland Waters and Wetlands:** Waters that are regulated under Section 404 of the Clean Water Act, including rivers, streams, lakes, ponds and wetlands, and excluding Section 10 Navigable Waters of the U.S. The jurisdictional limits are the ordinary high water (OHW) mark in the absence of adjacent wetlands, beyond the OHW mark to the limit of adjacent wetlands when adjacent wetlands are present, and the wetland limit when only wetlands are present. For the purposes of this PGP, fill placed in the area between the mean high water (MHW) and the high tide line (HTL), and in the bordering and contiguous wetlands[1] to tidal waters are reviewed in the Navigable Waters section. (See II. Navigable Waters on the next page.) | | |
|---|---|---|---|
| | **CATEGORY 1** | **CATEGORY 2** | **INDIVIDUAL PERMIT** |
| (a) NEW FILL/ EXCAVATION DISCHARGES | <4,300 SF inland waterway and/or wetland fill and associated secondary impacts (e.g., areas drained, flooded, cleared or excavated). Fill area includes all temporary and permanent fill, and excavation discharges (except for incidental fallback). Swamp mats are considered as fill. [See General Condition (GC) 18.]<br><br>Provided:<br>• In-stream (e.g., rivers, streams, brooks, etc.) work limited to Jul 15 - Oct 1<br>• In-stream work of up to 4,300 SF of fill below OHW in waterways not designated as EFH for Atlantic salmon (see GC 11, Page 9) and performed in accordance with Maine Permit By Rule standards or a LURC permit.<br>• Waterway crossings shall comply with GC 22.<br>• Projects covered by a DEP Tier One permit with no cumulative impacts >15,000 SF in inland wetlands from previous permits, unauthorized work, and/or other state permits.<br>• Subdivision fill complies with GC 5, Single and Complete Projects (see Page 7).<br><br>This category excludes:<br>• Dams, dikes or activities involving water diversions.[2]<br>• Non-State approved sediment releases/sluices from dams.<br>• Open trench excavation in flowing waters (see GC 22, Page 12). | 4,300 SF to <3 acres inland waterway and/or wetland fill and associated secondary impacts (e.g., areas drained, flooded, cleared or excavated). Fill area includes all temporary and permanent fill, and excavation discharges (except for incidental fallback). Swamp mats filling any area ≥4,300 SF are reviewed in Category 2. (See GC 18, Page 11.)<br>Includes: In-stream work, including crossings (other than spanned crossing as described in Category 1) with any discharge of fill below ordinary high water in perennial waterways designated as EFH for Atlantic salmon. Time of year restrictions determined case-by-case.<br><br>Projects with proactive restoration as a primary purpose with impacts of any area ≥4,300 SF. The Corps, in consultation with State & Federal agencies, must determine that net adverse effects are not more than minimal.<br><br>Specific activities with impacts of any area ≥4,300 SF required to affect the containment, stabilization, or removal of hazardous or toxic waste materials that are performed, ordered, or sponsored by a government agency with established legal or regulatory authority. Wetlands must be restored in place. | ≥3 acres inland waterway and/or wetland fill and secondary impacts (e.g., areas drained, flooded, cleared or excavated). Fill area includes all temporary and permanent fill, and excavation discharges (except for incidental fallback).[5]<br><br>EIS required by the Corps.<br><br>In-stream work exceeding Category 2 limits. |

| | CATEGORY 1 | CATEGORY 2 | INDIVIDUAL PERMIT |
|---|---|---|---|
| | • Work in waters designated as EFH for Atlantic salmon (see GC 11, Page 9), unless the waterway is crossed with a span and footprints of the span abutments are outside ordinary high water with no more than 4,300 SF of associated wetland impact.<br>• Work in Special Inland Waters or Wetlands[3] (vernal pools).<br>• Work in special aquatic sites (SAS)[4] other than wetlands.<br>• Work within ¼ mile of a Wild and Scenic River (see GC 12, Page 9).<br>• Work on National Lands (see GC 9, Pg. 9).<br>• Work affecting threatened or endangered species (see GC 10, Page 9) or EFH salmon migration (see GC 11, Page 9). | | |
| **(b) BANK STABILIZATION PROJECTS** | Inland bank stabilization <100 FT long and <1 CY of fill per linear foot below OHW.<br><br>Provided:<br>• In-stream work limited to Jul 15 - Oct 1.<br>• No work in special inland waters & wetlands[3] and SAS[4].<br>• No open trench excavation in flowing waters (see GC 22, Page 12).<br>• No structures angled steeper than 3H:1V allowed. Only rough-faced stone or fiber roll revetments allowed.<br>• No work affects threatened or endangered species (see GC 10, Page 9) or EFH (see GC 11, Page 9). | Inland bank stabilization ≥100 FT long and/or ≥1 CY of fill per linear foot, or any amount with fill in wetlands. | |
| **(c) REPAIR AND MAINTENANCE OF AUTHORIZED FILLS** | Repair or maintenance of existing, currently serviceable, authorized fills with no substantial expansion or change in use.<br>*Conditions of the original authorization apply, however minor deviations in fill design allowed.[6] | Replacement of non-serviceable fills, or repair/maintenance of serviceable fill, with expansion <3 acres, or with a change in use. | Replacement of non-serviceable fill, or repair/maintenance of serviceable fill, with expansion ≥1 acre. |

| II. NAVIGABLE WATERS | **Navigable Waters of the United States**: Waters that are subject to the ebb and flow of the tide and Federally designated navigable rivers (the Penobscot River, Kennebec River, and Lake Umbagog) (Section 10 Rivers and Harbors Act of 1899). The jurisdictional limits are the mean high water (MHW) line in tidal waters and the ordinary high water (OHW) mark in non-tidal portions of the Federally designated navigable rivers. For the purposes of this PGP, fill placed in the area between the mean high water (MHW) and the high tide line (HTL), and in the bordering and contiguous wetlands[1] to tidal waters are also reviewed in this Navigable Waters section. | | |
|---|---|---|---|
| | **CATEGORY 1** | **CATEGORY 2** | **INDIVIDUAL PERMIT** |
| (a) FILL | Discharges of dredged or fill material incidental to the construction of bridges across navigable waters of the United States, including cofferdams, abutments, foundation seals, piers, and temporary construction and access fills provided the U.S. Coast Guard authorizes such discharges as part of the bridge permit. Causeways and approach fills are not included in this category and require Category 2 or Individual Permit authorization. | <1 acre fill and/or secondary waterway impacts (e.g., areas drained, flooded or cleared). Fill includes temporary and permanent waterway fill.<br><br>Temporary fill or excavation <1 acre in SAS[4].<br><br>Permanent fill or excavation <1,000 SF in SAS[4].<br><br>Permanent fill and/or excavation ≥1,000 SF in SAS[5] when associated with a project with proactive restoration as a primary purpose. The Corps, in consultation with Federal & state agencies, must determine that net adverse effects are not more than minimal.<br><br>Specific activities with impacts of any area required to affect the containment, stabilization, or removal of hazardous or toxic waste materials that are performed, ordered, or sponsored by a government agency with established legal or regulatory authority. Wetlands must be restored in place. | ≥1 acre waterway fill and/or secondary waterways or wetland impacts (e.g., areas drained, flooded or cleared). Fill includes temporary and permanent waterway fill.<br><br>Temporary fill or excavation ≥1 acre in SAS[4].<br><br>Permanent fill or excavation ≥1,000 SF in SAS[4] other than as specified in Cat. 2<br><br>EIS required by the Corps. |
| (b) REPAIR AND MAINTENANCE WORK | Repair or maintenance of existing, currently serviceable, authorized structure or fill with no substantial expansion or change in use.<br>*Conditions of the original authorization apply. Must be rebuilt in same footprint, however minor deviations in structure design allowed[6] | Replacement of non-serviceable structures and fills or repair/maintenance of serviceable structures or fills, with fill, replacement or expansion <1 acre, or with a change in use. | Replacement of non-serviceable structures and fills or repair/ maintenance of serviceable structures or fill, with replacement or expansion ≥1 acre. |

| | CATEGORY 1 | CATEGORY 2 | INDIVIDUAL PERMIT |
|---|---|---|---|
| (c) DREDGING AND ASSOCIATED DISPOSAL | Maintenance dredging for navigational purposes <1,000 cy with upland disposal. Includes return water from upland contained disposal area.<br><br>Provided:<br>• Proper siltation controls are used.<br>• Dredging & disposal operation limited to November 1 - January 15.<br>• No impact to special aquatic sites[4].<br>• No dredging in intertidal areas.<br>• No work affects threatened or endangered species (see GC 10, Page 9) or EFH salmon migration (see GC 11, Page 9). | Maintenance dredging ≥1,000 CY, new dredging <25,000 CY, or projects not meeting Category 1. Includes return water from upland contained disposal areas.<br><br>Provided:<br>• Disposal includes 1) upland, 2) beach nourishment (above MHW) of any area provided dredging's primary purpose is navigation or sand is from an upland source and Corps, in consultation w/Federal and State agencies, determines the net adverse effects are not more than minimal; and 3) open water & confined aquatic disposal, if Corps, in consultation with Federal and State agencies, finds the material suitable. | Maintenance dredging and/or disposal (any amount) in or affecting a SAS[4]. See II(a) above for dredge disposal in wetlands or waters.<br><br>New dredging ≥25,000 CY, or any amount in or affecting SAS[4].<br><br>Beach nourishment associated with dredging when the primary purpose is not navigation (i.e., aggregate/sand mining) or the material is from an upland source. |
| (d) MOORINGS | Private, non-commercial, non-rental, single-boat moorings authorized by the local harbormaster.<br><br>Provided:<br>• Not associated with any boating facility[7]<br>• Not located in a Federal Navigation Project other than a Federal Anchorage. Moorings in Federal Anchorage not associated with a boating facility[7].<br>• No interference with navigation<br>• Not located in vegetated shallows[8]<br>• Within ¼ mile of the owner's residence or a public access point.[9]<br><br>Minor relocation of previously authorized moorings and moored floats consistent with Harbormaster recommendations, provided it is also consistent with local regulations, is not located in vegetated shallows, and does not interfere with navigation. | Moorings associated with a boating facility[7].<br><br>Moorings that don't meet the terms in Category 1 and don't require an Individual Permit.<br><br>Moorings located such that they, and/or vessels docked or moored at them, are within the buffer zone of the horizontal limits[10] of a Corps Federal Channel. (See Appendix B.) The buffer zone is equal to three times the authorized depth of that channel. | Moorings within the horizontal limits[10], or with moored vessels that extend, into the horizontal limits of a Federal Navigation Project (See App. B), except those in Federal Anchorages under Category 1.<br><br>Note: Federal Navigation Projects include both Federal Channels and Federal Anchorages. |

| | CATEGORY 1 | CATEGORY 2 | INDIVIDUAL PERMIT |
|---|---|---|---|
| (e) STRUCTURES AND FLOATS | Reconfiguration of existing authorized structures or floats.<br><br>Provided:<br>• Structures not positioned over vegetated shallows[8] or salt marsh.<br>• Floats supported off substrate at low tide.<br>• No dredging, additional slips or expansion.<br>• No work affects threatened or endangered species (see GC 10, Page 9) or EFH salmon migration (see GC 11, Page 9).. | Private structures or floats, including floatways/skidways, built to access waterway (seasonal and permanent)<br><br>Expansions to existing boating facilities[7].<br><br>Compliance with the following is recommended, but not required:<br>• Pile-supported structures <400 SF, with attached floats totaling ≤200 SF.<br>• Bottom anchored floats ≤200 SF.<br>• Structures are ≤4' wide and have at least a 1:1 height:width ratio[11].<br>• Floats supported above the substrate during all tides.<br>• Structures & floats not located within 25' of any vegetated shallows[8].<br>• Moored vessels not positioned over SAS[4].<br>• No structure located within 25' of the riparian property boundary.<br>• No structure extends across >25% of the waterway width at mean low water.<br>• Not located within the buffer zone of the horizontal limits[10] of a Corps Federal Navigation Project (FNP) (See App. B). The buffer zone is equal to three times the authorized depth of that FNP. | Structures or floats, including floatways/skidways, located such that they and/or vessels docked or moored at them are within the horizontal limits of a Corps Federal Navigation Project (see App. B).<br><br>Structures and floats associated with a new or previously unauthorized boating facility[7].<br><br>Note: Federal Navigation Projects include both Federal Channels and Federal Anchorages. |
| (f) MISCELLANEOUS | Temporary buoys, markers, floats, etc. for recreational use during specific events, provided they are removed within 30 days after use is discontinued.<br><br>The placement of aids to navigation and regulatory markers which are approved by and installed in accordance with the requirements of the U.S. Coast Guard. (See 33 CFR part 66, Chapter I, subchapter C)." | Structures or work in or affecting tidal or navigable waters, that are not defined under any of the previous headings listed above. Includes, but is not limited to, utility lines, aerial transmission lines, pipelines, outfalls, boat ramps, floatways/skidways, bridges, tunnels and horizontal directional drilling activities seaward of the MHW line. | EIS required by the Corps.<br><br>Shellfish/finfish (other than Atlantic salmon), or other aquaculture facilities with more than minimal individual and cumulative impacts to environmental resources or navigation. A 25' eelgrass set back is recommended. |

| | | | |
|---|---|---|---|
| | Oil spill clean-up temporary structures or fill. Fish/wildlife harvesting structures/fill (as defined by 33 CFR 330, App. A-4)<br><br>Scientific measurement devices and survey activities such as exploratory drilling, surveying and sampling activitities. Does not include oil and gas exploration and fill for roads or construction pads.<br><br>Shellfish seeding (brushing the flats[12]) projects.<br><br>Provided:<br>• No work in National Wildlife Refuges.<br>• No work affects threatened or endangered species (see GC 10, Page 9) or EFH salmon migration (see GC 11, Page 9). | Shellfish/finfish (other than Atlantic salmon), or other aquaculture facilities with no more than minimal individual and cumulative impacts to environmental resources or navigation. A 25' eelgrass set back is recommended. Aquaculture guidelines are provided at: www.maine.gov/dmr/aquaculture/index.htm. | Aquaculture guidelines are provided at: www.maine.gov/dmr/aquaculture/index.htm. |

[1] **Bordering and Contiguous Wetlands:** A bordering wetland is immediately next to its adjacent waterbody and may lie at, or below, the ordinary highwater mark (MHW in navigable waters) of that waterbody and is directly influenced by its hydrologic regime. Contiguous wetlands extend landward from their adjacent waterbody to a point where a natur or manmade discontinuity exists. Contiguous wetlands include bordering wetlands as well as wetlands that are situated immediately above the ordinary highwater mark and above th normal hydrologic influence of their adjacent waterbody. Note, with respect to the Federally designated navigable rivers, the wetlands bordering and contiguous to the tidally influenced portions of those rivers are reviewed under "II. Navigable Waters."

[2] **Water Diversions:** Water diversions are activities such as bypass pumping or water withdrawals. Temporary flume pipes, culverts or cofferdams where normal flows are maintaine within the stream boundary's confines aren't water diversions. "Normal flows" are defined as no change in flow from pre-project conditions.

[3] **Special Inland Waters and Wetlands:** Vernal Pools - Temporary to permanent bodies of water occurring in shallow depressions that fill during the spring and fall and may dry during the summer. Vernal pools have no permanent or viable populations of predatory fish. Vernal pools provide the primary breeding habitat for wood frogs, spotted salamanders, blue-spotted salamanders, and fairy shrimp, and provide habitat for other wildlife including several endangered and threatened species.

[4] **Special Aquatic Sites:** Includes wetlands and saltmarsh, mudflats, riffles and pools, and vegetated shallows.

[5] **IP Required:** The greater the impacts, the more likely an Individual Permit will be required. The Corps will determine the need for compensatory mitigation on a case-by-case basi

[6] **Maintenance:** Minor deviations in the structure's configuration or filled area, including those due to changes in materials, construction techniques, or current construction codes or safety standards, which are necessary to make repair, rehabilitation, or replacement are permitted, provided the adverse environmental effects resulting from such repair, rehabilitatior or replacement are minimal. No seaward expansion for bulkheads or any other fill activity is considered Category 1 maintenance. Currently serviceable means useable as is or with some maintenance, but not so degraded as to essentially require reconstruction.

[7] **Boating Facilities:** Facilities that provide, rent, or sell mooring space, such as marinas, yacht clubs, boat clubs, boat yards, town facilities, dockominiums, etc.

[8] **Vegetated Shallows:** Subtidal areas that support rooted aquatic vegetation such as eelgrass

[9] **Mooring Location:** Cannot be at a remote location to create a convenient transient anchorage.

[10] **Horizontal Limits:** The outer edge of a Federal Navigation Project (FNP). Contact the Corps of Engineers for information on FNP's.

[11] **Structures:** The height of structures shall at all points be equal to or exceed the width of the deck. For the purpose of this definition, height shall be measured from the marsh substrate to the bottom of the longitudinal support beam.

[12] **Brushing the Flats:** The placement of tree boughs, wooden lath structure, or small-mesh fencing on mudflats to enhance recruitment of soft-shell clams (*Mya arenaria*).

# Federal Navigation Projects in Maine

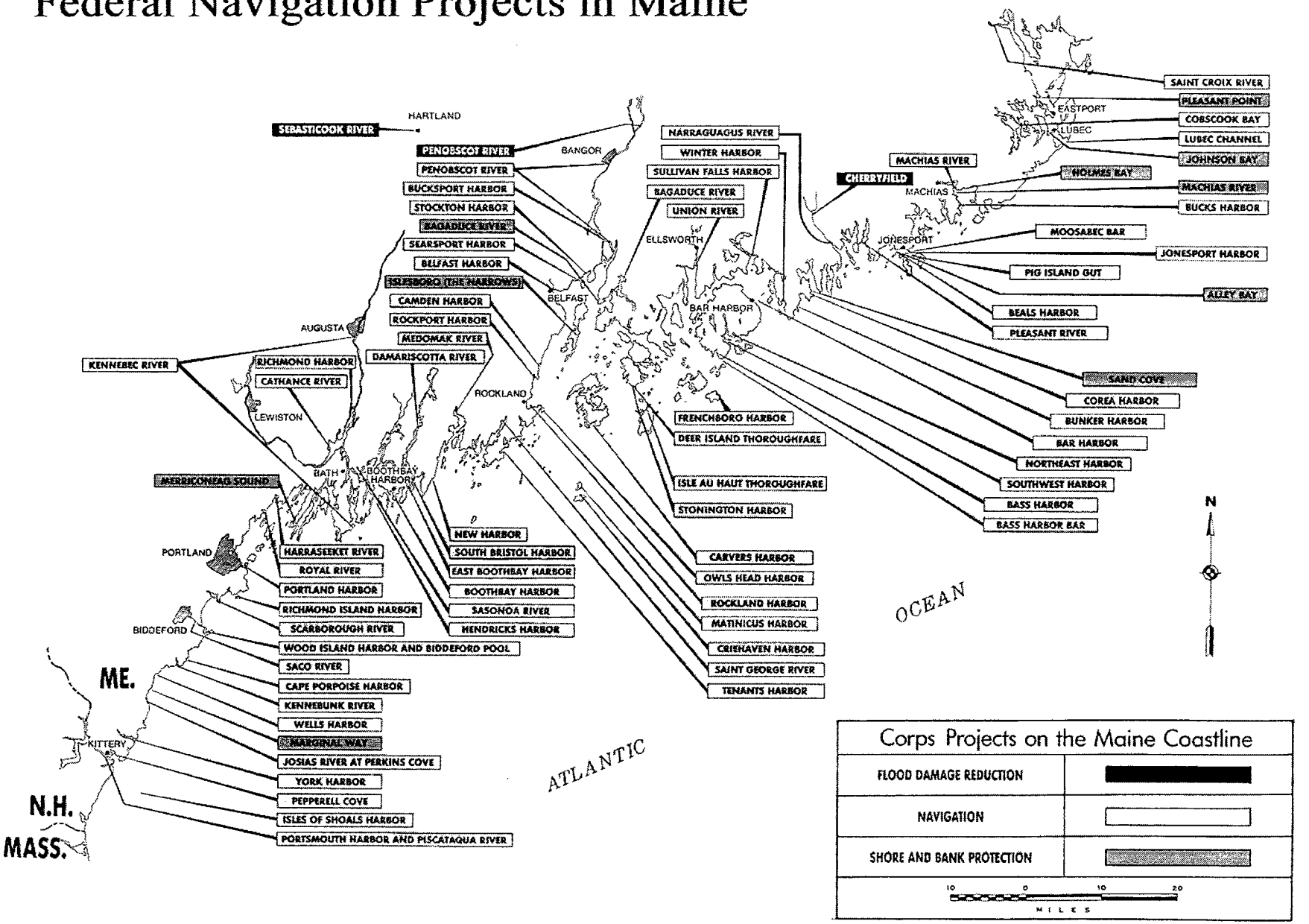

# APPENDIX A TO DIVISION 100

## SECTION 1 - BIDDING PROVISIONS

A. Federally Required Certifications By signing and delivering a Bid, the Bidder certifies as provided in all certifications set forth in this Appendix A - Federal Contract Provisions Supplement including:

- Certification Regarding No Kickbacks to Procure Contract as provided on this page 1 below.
- Certification Regarding Non-collusion as provided on page 1 below.
- Certification Regarding Non-segregated Facilities as provided by FHWA Form 1273, section III set forth on page 21 below.
- "Certification Regarding Debarment, Suspension, Ineligibility and Voluntary Exclusion" as provided by FHWA Form 1273, section XI set forth on page 32 below.
- "Certification Regarding Use of Contract Funds for Lobbying" as provided by FHWA Form 1273, section XII set forth on page 35 below.

Unless otherwise provided below, the term "Bidder", for the purposes of these certifications, includes the Bidder, its principals, and the person(s) signing the Bid. Upon execution of the Contract, the Bidder (then called the Contractor) will again make all the certifications indicated in this paragraph above. Upon execution of the Contract, the Bidder (then called the Contractor) will again make all the certifications indicated in this paragraph above.

CERTIFICATION REGARDING NO KICKBACKS TO PROCURE CONTRACT Except expressly stated by the Bidder on sheets submitted with the Bid (if any), the Bidder hereby certifies, to the best of its knowledge and belief, that it has not:

(A) employed or retained for a commission, percentage, brokerage, contingent fee, or other consideration, any firm or person (other then a bona fide employee working solely for me) to solicit or secure this contract;

(B) agreed, as an express or implied condition for obtaining this contract, to employ or retain the services of any firm or person in connection with carrying out the contract, or;

C) paid, or agreed to pay, to any firm, organization, or person (other than a bona fide employee working solely for me) any fee, contribution, donation, or consideration of any kind for, or in connection with, procuring or carrying out the contract;

By signing and submitting a Bid, the Bidder acknowledges that this certification is to be furnished to the Maine Department of Transportation and the Federal Highway Administration, U.S. Department of Transportation in connection with this contract in anticipation of federal aid highway funds and is subject to applicable state and federal laws, both criminal and civil.

CERTIFICATION REGARDING NONCOLLUSION Under penalty of perjury as provided by federal law (28 U.S.C. §1746), the Bidder hereby certifies, to the best of its knowledge and belief, that:

the Bidder has not, either directly or indirectly, entered into any agreement, participated in any collusion, or otherwise taken any action in restraint of competitive bidding in connection with the Contract.

For a related provisions, see Section 102.7.2 (C) of the Standard Specifications - "Effects of Signing and Delivery of Bids" - "Certifications", Section 3 of this Appendix A entitled "Other Federal Requirements" including section XI - "Certification Regarding Debarment, Suspension, Ineligibility, and Voluntary Exclusion" and section XII. - "Certification Regarding Use of Contract Funds for Lobbying."

**********

B. Bid Rigging Hotline To report bid rigging activities call: **1-800-424-9071**

The U.S. Department of Transportation (DOT) operates the above toll-free "hotline" Monday through Friday, 8:00 a.m. to 5:00 p.m., eastern time. Anyone with knowledge of possible bid rigging, bidder collusion, or other fraudulent activities should use the "hotline" to report such activities.

The "hotline" is part of the DOT's continuing effort to identify and investigate highway construction contract fraud and abuse and is operated under the direction of the DOT Inspector General. All information will be treated confidentially and caller anonymity will be respected.

**********

## SECTION 2 - FEDERAL EEO AND CIVIL RIGHTS REQUIREMENTS

Unless expressly otherwise provided in the Bid Documents, the provisions contained in this Section 2 of this "Federal Contract Provisions Supplement" are hereby incorporated into the Bid Documents and Contract.

A. Nondiscrimination & Civil Rights - Title VI The Contractor and its subcontractors shall not discriminate on the basis of race, color, national origin, or sex in the performance of this Contract. The Contractor shall carry out applicable requirements of 49 CFR Part 26 in the award and administration of DOT assisted contracts. Failure by the Contractor to carry out these requirements is a material breach of this contract, which may result in the termination of this contract or such other remedy as the Department deems appropriate. The Contractor and subcontractors shall comply with Title VI of the Civil Rights Act of 1964, as amended, and with all State of Maine and other Federal Civil Rights laws.

For related provisions, see Subsection B - "Nondiscrimination and Affirmative Action - Executive Order 11246" of this Section 2 and Section 3 - Other Federal Requirements of this "Federal Contract Provisions Supplement" including section II - "Nondiscrimination" of the "Required Contract Provisions, Federal Aid Construction Contracts", FHWA-1273.

B. Nondiscrimination and Affirmative Action - Executive Order 11246 Pursuant to Executive Order 11246, which was issued by President Johnson in 1965 and amended in 1967 and 1978, this Contract provides as follows.

The Contractor shall take specific affirmative actions to ensure equal employment opportunity. The evaluation of the Contractor's compliance with these specifications shall be based upon its efforts to achieve maximum results from its actions. The Contractor shall

document these efforts fully, and shall implement affirmative action steps at least as extensive as the following:

1. Ensure and maintain a working environment free of harassment, intimidations, and coercion at all sites, and in all facilities at which the Contractor's employees are assigned to work. The Contractor, where possible, will assign two or more women to each construction project. The Contractor shall specifically ensure that all forepersons, superintendents, and other on-site supervisory personnel are aware of and carry out the Contractor's obligation to maintain such a working environment, with specific attention to minority or female individuals working at such sites or in such facilities.

2. Establish and maintain a current list of minority and female recruitment sources, provide written notification to minority and female recruitment sources and to community organizations when the Contractor or its union have employment opportunities available, and to maintain a record of the organization's responses.

3. Maintain a current file of the names, addresses and telephone numbers of each minority and female off-the-street applicant and minority or female referral from a union, a recruitment source or community organization and of what action was taken with respect to each such individual. If such individual was sent to the union hiring hall for referral and was not referred back to the Contractor by the union or, if referred, not employed by the Contractor, this shall be documented in the file with the reason therefore, along with whatever additional actions the Contractor may have taken.

4. Provide immediate written notification to the Department's Civil Rights Office when the union or unions with which the Contractor has a collective bargaining agreement has not referred to the Contractor a minority person or woman sent by the Contractor, or when the Contractor has other information that the union referral process has impeded the Design-Builder's efforts to meet its obligations.

5. Develop on-the-job training opportunities and/or participate in training programs for the area which expressly include minorities and women, including upgrading programs and apprenticeship and trainee programs relevant to the Contractor's employment needs, especially those programs funded or approved by the Department of Labor. The Contractor shall provide notice of these programs to the sources compiled under B above.

6. Disseminate the Contractor's EEO policy by providing notice of the policy to unions and training programs and requesting their cooperation in assisting the Contractor in meeting its EEO obligation; by including it in any policy manual and collective bargaining agreement; by publicizing it in the company newspaper, annual report, etc.; by specific review of the policy with all management personnel and with all minority and female employees at least once a year; and by posting the company EEO policy on bulletin boards accessible to all employees at each location where construction work is performed.

7. Review, at least annually, the company's EEO policy and affirmative action obligations under these specifications with all employees having any responsibility for hiring, assignment, layoff, termination, or other employment decisions including specific review

of these items with on-site supervisory personnel such as Superintendents, General Forepersons, etc., prior to the initiation of construction work at any job site. A written record shall be made and maintained identifying the time and place of these meetings, persons attending, subject matter discussed, and disposition of the subject matter.

8. Disseminate the Contractor's EEO policy externally by including it in any advertising in the news media, specifically including minority and female news media, and providing written notification to and discussing the Contractor's EEO policy with other Contractor's and Subcontractors with whom the Contractor does or anticipates doing business.

9. Direct its recruitment efforts, both orally and written to minority, female and community organizations, to schools with minority and female students and to minority and female recruitment and training organizations serving the Contractor's recruitment area and employment needs. Not later that one month prior to the date for the acceptance of applications for apprenticeship or other training by any recruitment source, the Contractor shall send written notification to organizations such as the above describing the openings, screenings, procedures, and test to be used in the selection process.

10. Encourage present minority and female employees to recruit other minority persons and women and, where reasonable, provide after school, summer and vacation employment to minority and female youth, both on the site and in other areas of a Contractor's workforce.

11. Validate all tests and other selection requirements.

12. Conduct, at least annually, an inventory and evaluation at least of all minority and female personnel for promotional opportunities and encourage these employees to seek or to prepare for, through appropriate training, etc., such opportunities.

13. Ensure that seniority practices, job classifications, work assignments and other personnel practices, do not have a discriminatory effect by continually monitoring all personnel and employment related activities to ensure that the EEO policy and the Contractor's obligations under these specifications are being carried out.

14. Ensure that all facilities and company activities are non segregated except that separate or single-user toilet and necessary changing facilities shall be provided to assure privacy between the sexes.

15. Document and maintain a record of all solicitations of offers for subcontracts from minority and female construction Contractor's and suppliers, including circulation of solicitations to minority and female Contractor associations and other business associations.

16. Conduct a review, at least annually, of all supervisors' adherence to and performance under the Contractor's EEO policies and affirmative action obligations.

C. Goals for Employment of Women and Minorities Per Executive Order 11246, craft tradesperson goals are 6.9% women and .5% minorities employed. However, goals may be adjusted upward at the mutual agreement of the Contractor and the Department. Calculation of these percentages shall not include On-the-Job Training Program trainees, and shall not include clerical or field clerk position employees.

For a more complete presentation of requirements for such Goals, see the federally required document "Goals for Employment of Females and Minorities" set forth in the next 6 pages below.

**********

Start of GOALS FOR EMPLOYMENT OF FEMALES AND MINORITIES
Federally Required Contract Document

§60-4.2 Solicitations

(d) The following notice shall be included in, and shall be part of, all solicitations for offers and bids on all Federal and federally assisted construction contracts or subcontracts in excess of $10,000 to be performed in geographical areas designated by the Director pursuant to §60-4.6 of this part (see 41 CFR 60-4.2(a)):

Notice of Requirement for Affirmative Action to Ensure Equal Opportunity (Executive Order 11246)

1. The Offeror's or bidder's attention is called to the "Equal Opportunity Clause" and the "Standard Federal Equal Employment Specifications" set forth herein.

2. The goals and timetables for minority and female participation, expressed in percentage terms for the Contractor's aggregate work force in each trade on all construction work in the covered area, are as follows:

Goals for female participation in each trade 6.9%

Goals for minority participation for each trade
Maine
001 Bangor, ME 0.8%
Non-SMSA Counties (Aroostook, Hancock, Penobscot, Piscataquis, Waldo, Washington)

002 Portland-Lewiston, ME
SMSA Counties: 4243 Lewiston-Auburn, ME 0.5%
(Androscoggin)

6403 Portland, ME 0.6%
(Cumberland, Sagadahoc)

Non-SMSA Counties: 0.5%
(Franklin, Kennebec, Knox, Lincoln, Oxford, Somerset, York)

These goals are applicable to all the Contractor's construction work (whether or not it is Federal or federally assisted) performed in the covered area. If the contractor performs construction work in a geographical area located outside of the covered area, it shall apply the goals established for such geographical area where the work is actually performed. With regard to this second area, the contractor also is subject to the goals for both its federally involved and non federally involved construction.

The contractor's compliance with the Executive Order and the regulations in 41 CFR Part 60-4 shall be based on its implementation of the Equal Opportunity Clause, specific affirmative action obligations required by the specifications set forth in 41 CFR 60-4.3(a), and its efforts to meet the goals. The hours of minority and female employment and training must be substantially uniform throughout the length of the contract, and in each trade, and the contractor shall make a good faith effort to employ minorities and women evenly on each of its projects. The transfer of minority or female employees or trainees from Contractor to Contractor or from project to project for the sole purpose of meeting the Contractor's goals shall be in violation of the contract, the Executive Order and the regulations in 41 CFR Part 60-4. Compliance with the goals will be measured against the total work hours performed.

3. The Contractor shall provide written notification to the Director of the Office of Federal Contract Compliance Programs within 10 working days of award of any construction subcontract in excess of $10,000 at any tier for construction work under the contract resulting from this solicitation. The notification shall list the name, address and telephone number of the subcontractor, employer identification number of the subcontractor, estimated dollar amount of the subcontract; estimated started and completion dates of the subcontract; and the geographical area in which the subcontract is to be performed.

4. As used in this Notice, and in the Contract resulting from this solicitation, the "covered area" is (insert description of the geographical areas where the contract is to be performed giving the state, county and city, if any).

## STANDARD FEDERAL EQUAL EMPLOYMENT OPPORTUNITY CONSTRUCTION CONTRACT SPECIFICATIONS (EXECUTIVE ORDER 11246)

1. As used in these specifications:

   a. "Covered area" means the geographical area described in the solicitation from which this contract resulted;

   b. "Director" means Director, Office of Federal Contract Compliance Programs, United States Department of Labor, or any person to whom the Director delegates authority;

   c. "Employer identification number" means the Federal Social Security number used on the Employer's Quarterly Federal Tax Return, U.S. Treasury Department form 941;

   d. "Minority" includes:
      (i) Black (all persons having origins in any of the Black African racial groups not of Hispanic origin);

(ii) Hispanic (all persons of Mexican, Puerto Rican, Cuban, Central or South American or other Spanish Culture or origin, regardless of race);
(iii) Asian and Pacific Islander (all persons having origins in any of the original peoples of the Far East, Southeast Asia, the Indian Subcontinent, or the Pacific Islands); and
(iv) American Indian or Alaskan Native (all persons having origins in any of the original peoples of the North America and maintaining identifiable tribal affiliations through membership and participation or community identification).

2. Whenever the Contractor, or any subcontractor at any tier, subcontracts a portion of the work involving any construction trade, it shall physically include in each subcontract in excess of $10,000 the provisions of these specifications and the Notice which contains the applicable goals for minority and female participation and which is set forth in the solicitations from which this contract resulted.

3. If the contractor, is participating (pursuant to 41 CFR 60-4.5) in a Hometown Plan approved by the U.S. Department of Labor in the covered area either individually or through an association, its affirmative action obligations on all work in the Plan area (including goals and timetables) shall be in accordance with that Plan for those trades which have unions participating in the Plan. Contractors must be able to demonstrate their participation in and compliance with the provisions of any such Hometown Plan. Each Contractor or Subcontractor participating in an approved Plan is individually required to comply with its obligations under the EEO clause, and to make a good faith effort to achieve each goal under the Plan in each trade in which it has employees. The overall good faith performance by other Contractors for Subcontractors toward a goal in an approved Plan does not excuse any covered Contractor's or Subcontractor's failure to take good faith efforts to achieve the Plan goals and timetables.

4. The Contractor shall implement the specific affirmative action standards provided in paragraphs 7 a. through p. of these specifications. The goals set forth in the solicitation from which this contract resulted are expressed as percentages of the total hours of employment and training of minority and female utilization the Contractor should reasonably be able to achieve in each construction trade in which it has employees in contractors performing construction work in geographical areas where they do not have a Federal or federally assisted construction contract shall apply the minority and female goals established for the geographical areas where the work is being performed. Goals are published periodically in the Federal Register in notice form and such notices may be obtained from any Office of Federal Contract Compliance Programs office or from Federal procurement contracting officers. The Contractor is expected to make substantially uniform progress in meeting its goals in each craft during the period specific.

5. Neither the provisions of any collective bargaining agreement, nor the failure by a union with whom the Contractor has a collective bargaining agreement, to refer either minorities or women shall excuse the Contractor's obligations under these specifications, Executive Order 11246, or the regulations promulgated pursuant, thereto.

6. In order for the non working training hours of apprentices and trainees to be counted in meeting the goals, such apprentices and trainees must be employed by the Contractor during the training period, and the Contractor must have made a commitment to employ the

apprentices and trainees at the completion of their training, subject to the availability of employment opportunities. Trainees must be trained pursuant to training programs approved by the U.S. Department of Labor.

7. The Contractor shall take specific affirmative actions to ensure equal employment opportunity. The evaluation of the Contractor's compliance with these specifications shall be based upon its effort to achieve maximum results from its actions. The Contractor shall document these efforts fully, and shall implement affirmative action steps at least as expensive as the following:

   a. Ensure and maintain a working environment free of harassment, intimidation, coercion at all sites, and in all facilities at which the Contractor's employees are assigned to work. The Contractor, when possible, will assign two or more women to each construction project. The Contractor shall specifically ensure that all foremen, superintendents, and other on-site supervisory personnel are aware of and carry out the Contractor's obligation to maintain such a working environment, with specific attention to minority or female individuals working at such sites or in such facilities.

   b. Establish and maintain a current list of minority and female recruitment sources provide written notification to minority and female recruitment sources and to community organizations when the Contractor or its unions have employment opportunities available, and maintain a record of the organization's responses.

   c. Maintain a current file of the names, addresses and telephone numbers of each minority and female off-the-street applicant and minority or female referral from a union, a recruitment sources or community organization and of what action was taken with respect to each such individual. If such individual was sent to the union hiring hall for referral and was not referred back to the Contractor by the union or, if referred, not employed by the Contractor, this shall be documented in the file with the reason therefore, along with whatever additional actions the Contractor may have taken.

   d. Provide immediate written notification to the Director when the union or unions with which the Contractor has a collective bargaining agreement has not referred to the Contractor a minority person or woman sent by the Contractor, or when the Contractor has other information that the union referral process has impeded the Contractor's efforts to meet its obligations.

   e. Develop on-the-job training opportunities and/or participate in training programs for the area which expressly include minorities and women, including upgrading programs and apprenticeship and trainee programs relevant to the Contractor's employment needs, especially those programs funded or approved by the Department of Labor. The Contractor shall provide notice of these programs to the sources complied under 7b above.

   f. Disseminate the Contractor's EEO policy by providing notice of the policy to unions and training programs and requesting their cooperation in assisting the Contractor in meeting its EEO obligations; by including in any policy manual and collective bargaining agreement; by publicizing it in the company newspaper, annual report, etc.; by specific

review of the policy with all management personnel and with all minority and female employees at least once a year; and by posting the company EEO policy on bulletin boards accessible to all employees at each location where construction work is performed.

g. Review, at least annually, the company's EEO policy and affirmative action obligations under these specifications with all employees having any responsibility for hiring, assignment, layoff, termination or other employment decisions including specific review of these items with on-site supervisory personnel such as Superintendents, General Foremen, etc., prior to the initiation of construction work at any job site. A written record shall be made and maintained identifying the time and place of these meetings, persons attending, subject matter discussed, and disposition of the subject matter.

h. Disseminate the Contractor's EEO policy externally by including it in any advertising in the news media, specifically including minority and female news media, and providing written notification to and discussing the Contractor's EEO policy with other Contractors and Subcontractors with whom the Contractor does or anticipates doing business.

i. Direct its recruitment, efforts, both oral and written, to minority, female and community organizations, to schools with minority and female students and to minority and female recruitment and training organizations serving the Contractor's recruitment area and employment needs. Not later than one month other training by any recruitment source, the Contractor shall send written notification to organizations such as the above, describing prior to the date for the acceptance of applications for apprenticeship or the openings, screening procedures, and tests to be used in the selection process.

j. Encourage present minority and female employees to recruit other minority persons and women and, where reasonable, provide after school, summer and vacation employment to minority and female youth both on site and in other areas of a Contractor's work force.

k. Validate all tests and other selection requirements where there is an obligation to do so under 41 CFR Part 60-3.

l. Conduct, at least annually, an inventory and evaluation at least of all minority and female personnel for promotional opportunities and encourage these employees to seek or to prepare for, through appropriate training, etc., such opportunities.

m. Ensure that seniority practices, job classifications, work assignments and other personnel practices, do not have a discriminatory effect by continually monitoring all personnel and employment related activities to ensure that the EEO policy and the Contractor's obligations under these specifications are being carried out.

n. Ensure that all facilities and company activities are non segregated except that separate or single-user toilet and necessary changing facilities shall be provided to assure privacy between the sexes.

o. Document and maintain a record of all solicitations of offers for subcontracts from minority and female construction contractors and suppliers, including circulation of

solicitation to minority and female contractor associations and other business associations.

p. Conduct a review, at least annually, of all supervisor's adherence to and performance under the Contractor's EEO policies and affirmative action obligations.

8. Contractors are encouraged to participate in voluntary associations which assist in fulfilling one or more of their affirmative action obligations (7 a through p.). The efforts of a contractor association, joint contractor-union, contractor-community, or other similar group of which the contractor is a member and participant, may be asserted as fulfilling any one or more of its obligations under 7 a through p. of these specifications provided that the contractor actively participates in the group, makes every effort to assure that the group has a positive impact on the employment of minorities and women in the industry, ensures that the concrete benefits of the program and reflected in the Contractor's minority and female work force participation, makes a good faith effort to meet its individual goals and timetables, and can provide access to documentation which demonstrates the effectiveness of actions take on behalf of the Contractor. The obligation to comply, however, is the Contractor's and failure of such a group to fulfill an obligation shall not be a defense for the Contractor's noncompliance.

9. A single goal for minorities and a separate single goal for women have been established. The Contractor, however, is required to provide equal employment opportunity and to take affirmative action for all minority groups, both make and female, and all women, both minority and non-minority. Consequently, the Contractor may be in violation of the Executive Order if a particular group is employed in a substantially disparate manner (for example, specific minority group of women is underutilized.)

10. The Contractor shall not use the goals and timetables or affirmative action even through the Contractor has achieved its goals for women generally, the Contractor may be in violation of the Executive Order if standards to discriminate against any person because of race, color, religion, sex, or national origin.

11. The Contractor shall not enter into any Subcontract with any person or firm debarred from Government contracts pursuant to Executive Order 11246.

12. The Contractor shall carry out such sanctions and penalties for violation of these specifications and of the Equal Opportunity Clause, including suspension, termination and cancellation of existing subcontracts as may be imposed or ordered pursuant to Executive Order 11246, as amended, and its implementation regulations by the Office of Federal Contract Compliance Programs. Any Contractor who fails to carry out such sanctions and penalties shall be in violation of these specifications and Executive Order 11246, as amended.

13. The Contractor, in fulfilling its obligations under these specifications, shall implement specific affirmative action steps, at least as extensive as those standards prescribed in paragraph 7 of these specifications, so as to achieve maximum results from its efforts to ensure equal employment opportunity. If the Contractor fails to comply with the

requirements of the Executive Order, the implementing regulations, or these specifications, the Director shall proceed in accordance with 41 CFR 60-4.6.

14. The Contractor shall designate a responsible official to monitor all employment related activity to ensure that the company EEO policy is being carried out, to submit reports relating to the provisions hereof as may be required by the Government and to keep records. Records shall at least include for each employee the name, address, telephone numbers, construction trade, union affiliation if any, employee identification number when assigned, social security number, race, sex, status (e.g. mechanic, apprentice, trainee, helper, or laborer), dates of changes in status, hours worked per week in the indicated trade, rate of pay, and location sat which the work was performed. Records be maintained in an easily understandable and retrievable form; however, to the degree that existing records satisfy this requirement, contractors shall not be required to maintain separate records.

15. Nothing herein provided shall be construed as a limitation upon the application of other laws which establish different standards of compliance or upon the application of requirements for the hiring of local or other area residents (e.g., those under the Public Works Employment Act of 1977 and the Community Development Block Grant Program).

End of GOALS FOR EMPLOYMENT OF FEMALES AND MINORITIES
Federally Required Contract Document

**********

D. Disadvantaged Business Enterprise (DBE) Requirements The Department has established an annual Disadvantaged Business Enterprise goal to be achieved through race neutral means. This goal will adjusted periodically and will be provided by Supplemental Provision. The Contractor shall comply with all provisions of this section regarding DBE participation and the Department's latest version of the Disadvantaged Business Enterprise Program Manual, said Manual being incorporated herein by reference. In the case of conflict between this Contract and said Manual, this Contract shall control. The Department reserves the right to adjust DBE goals on a project-by-project basis by addendum.

Policy. It is the Department's policy that DBEs as defined in 23 CFR Part 26 and referenced in the Transportation Equity Act for 21st Century of 1998, as amended from the Surface Transportation Uniform Relocation Assistance Act of 1987, and the Intermeddle Surface Transportation Efficiency Act of 1991. The intent hereto remains to provide the maximum opportunity for DBEs to participate in the performance of contracts financed in whole or in part with federal funds.

The Department and its Contractors shall not discriminate on the basis of race, color, national origin, ancestry, sex, age, or disability in the award and performance of DOT assisted contracts.

Disadvantaged Business Enterprises are those so certified by the Maine Department of Transportation Civil Rights Office prior to bid opening date.

The Department has determined that elements of a good faith effort to meet the contract goal include but are not limited to the following:

1. Whether the Contractor advertised in general circulation, trade association, and minority/women's-focus media concerning the subcontracting opportunities;

2. Whether the Contractor provided written notice to a reasonable number of specific DBEs that their interest in the contract is being solicited;

3. Whether the Contractor followed up on initial solicitations of interest by contacting DBEs to determine with certainty whether the DBEs were interested;

4. Whether the Contractor selected portions of the work to be performed by DBEs in order to increase the likelihood of meeting the DBE goals;

5. Whether the Contractor provided interested DBEs with adequate information about the plans, specification and requirements of the contract;

6. Whether the Contractor negotiated in good faith with interested DBEs, not rejecting the DBE as unqualified without sound reasons based on a thorough investigation of their capabilities;

7. Whether the Contractor made efforts to assist interested DBEs with other appropriate technical/financial assistance required by the Department or Contractor;

8. Whether the Contractor effectively used the services of available minority/women's community organizations, minority/women's business assistance offices; and other organizations that provide assistance in the recruitment and placement of DBEs.

Substitutions of DBEs. The following may be acceptable reasons for Civil Rights Office approval of such a change order:

- The DBE defaults, voluntarily removes itself or is over-extended;
- The Department deletes portions of the work to by performed by the DBE.

It is not intended that the ability to negotiate a more advantageous contract with another certified DBE be considered a valid basis for such a change in DBE utilization once the DBE Bid Submission review has been passed. Any requests to alter the DBE commitment must be in writing and included with the change order.

Failure to carry out terms of this Standard Specification shall be treated as a violation of this contract and will result in contract sanctions which may include withholding of partial payments totaling the creditable dollars amount which would have been paid for said DBE participation, termination of this contract or other measures which may affect the ability of the Contractor to obtain Department contracts.

Copies of the Maine Department of Transportation's DBE Program may be obtained from:

Maine Department of Transportation
Civil Rights Office
#16 State House Station
Augusta, Maine 04333-0016
tel. (207) 624-3519

Quarterly Reporting Requirement. The Contractor must submit Semi-annual reports of actual dollars paid to Disadvantaged Business Enterprises (DBE's) on this Project to the MDOT Civil Rights Office by the end of the third week of April and October for the period covering the preceding six months considered Federal Fiscal Year periods. The reports will be submitted directly to the Civil Rights Office on the form provided in the latest version of the DBE Program Manual. Failure to submit the report by the deadline may result in a withholding of approval of partial payment estimates by the Department.

## SECTION 3 - OTHER FEDERAL REQUIREMENTS

Unless expressly otherwise provided in the Bid Documents, the provisions contained in this Section 3 of this "Federal Contract Provisions Supplement" are hereby incorporated into the Bid Documents and Contract.

### A. Buy America

If the cost of products purchased for permanent use in this project which are manufactured of steel, iron or the application of any coating to products of these materials exceeds 0.1 percent of the contract amount, or $2,500.00, whichever is greater, the products shall have been manufactured and the coating applied in the United States. The coating materials are not subject to this clause, only the application of the coating. In computing that amount, only the cost of the product and coating application cost will be included.

Ore, for the manufacture of steel or iron, may be from outside the United States; however, all other manufacturing processes of steel or iron must be in the United States to qualify as having been manufactured in the United States.

United States includes the 50 United States and any place subject to the jurisdiction thereof.

Products of steel include, but are not limited to, such products as structural steel, piles, guardrail, steel culverts, reinforcing steel, structural plate and steel supports for signs, luminaries and signals.

Products of iron include, but are not limited to, such products as cast iron grates.

Application of coatings include, but are not limited to, such applications as epoxy, galvanized and paint.

To assure compliance with this section, the Contractor shall submit a certification letter on its letterhead to the Department stating the following:

> “This is to certify that products made of steel, iron or the application of any coating to products of these materials whose costs are in excess of $2,500.00 or 0.1 percent of the original contract amount, whichever is greater, were manufactured and the coating, if one was required, was applied in the United States.”

### B. Materials

a. Convict Produced Materials References: 23 U.S.C. 114(b)(2), 23 CFR 635.417

Applicability: FHWA's prohibition against the use of convict material only applies to Federal-aid highways. Materials produced after July 1, 1991, by convict labor may only be incorporated in a Federal-aid highway construction project if: 1) such materials have been produced by convicts who are on parole, supervised release, or probation from a prison; or 2) such material has been produced in a qualified prison facility, e.g., prison industry, with the amount produced during any 12-month period, for use in Federal-aid projects, not exceeding the amount produced, for such use, during the 12-month period ending July 1, 1987.

Materials obtained from prison facilities (e.g., prison industries) are subject to the same requirements for Federal-aid participation that are imposed upon materials acquired from other sources. Materials manufactured or produced by convict labor will be given no preferential treatment.

The preferred method of obtaining materials for a project is through normal contracting procedures which require the contractor to furnish all materials to be incorporated in the work. The contractor selects the source, public or private, from which the materials are to be obtained (23 CFR 635.407). Prison industries are prohibited from bidding on projects directly (23 CFR 635.112e), but may act as material supplier to construction contractors.

Prison materials may also be approved as State-furnished material. However, since public agencies may not bid in competition with private firms, direct acquisition of materials from a prison industry for use as State-furnished material is subject to a public interest finding with the Division Administrator's concurrence (23 CFR 635.407d). Selection of materials produced by convict labor as State-furnished materials for mandatory use should be cleared prior to the submittal of the Plans Specifications & Estimates (PS&E).

b. Patented/Proprietary Products References: 23 U.S.C. 112, 23 CFR 635.411

FHWA will not participate, directly or indirectly, in payment for any premium or royalty on any patented or proprietary material, specification, or process specifically set forth in the plans and specifications for a project, unless:

- the item is purchased or obtained through competitive bidding with equally suitable unpatented items,
- the STA certifies either that the proprietary or patented item is essential for synchronization with the existing highway facilities or that no equally suitable alternative exists, or
- the item is used for research or for a special type of construction on relatively short sections of road for experimental purposes. States should follow FHWA's procedures for "Construction Projects Incorporating Experimental Features" (expermnt.htm) for the submittal of work plans and evaluations.

The primary purpose of the policy is to have competition in selection of materials and allow for development of new materials and products. The policy further permits materials and products that are judged equal may be bid under generic specifications. If only patented or proprietary products are acceptable, they shall be bid as alternatives with all, or at least a

reasonable number of, acceptable materials or products listed; and the Division Administrator may approve a single source if it can be found that its utilization is in the public interest.

Trade names are generally the key to identifying patented or proprietary materials. Trade name examples include 3M, Corten, etc. Generally, products identified by their brand or trade name are not to be specified without an "or equal" phrase, and, if trade names are used, all, or at least a reasonable number of acceptable "equal" materials or products should be listed. The licensing of several suppliers to produce a product does not change the fact that it is a single product and should not be specified to the exclusion of other equally suitable products.

c. State Preference References: 23 U.S.C. 112, 23 CFR 635.409

Materials produced within Maine shall not be favored to the exclusion of comparable materials produced outside of Maine. State preference clauses give particular advantage to the designated source and thus restrict competition. Therefore, State preference provisions shall not be used on any Federal-aid construction projects.

This policy also applies to State preference actions against materials of foreign origin, except as otherwise permitted by Federal law. Thus, States cannot give preference to in-State material sources over foreign material sources. Under the Buy America provisions, the States are permitted to expand the Buy America restrictions provided that the STA is legally authorized under State law to impose more stringent requirements.

d. State Owned/Furnished/Designated Materials References: 23 U.S.C. 112, 23 CFR 635.407

Current FHWA policy requires that the contractor must furnish all materials to be incorporated in the work, and the contractor shall be permitted to select the sources from which the materials are to be obtained. Exceptions to this requirement may be made when there is a definite finding, by MDOT and concurred in by Federal Highway Administration's (FHWA) Division Administrator, that it is in the public interest to require the contractor to use materials furnished by the MDOT or from sources designated by MDOT. The exception policy can best be understood by separating State-furnished materials into the categories of manufactured materials and local natural materials.

Manufactured Materials When the use of State-furnished manufactured materials is approved based on a public interest finding, such use must be made mandatory. The optional use of State-furnished manufactured materials is in violation of our policy prohibiting public agencies from competing with private firms. Manufactured materials to be furnished by MDOT must be acquired through competitive bidding, unless there is a public interest finding for another method, and concurred in by FHWA's Division Administrator.

Local Natural Materials When MDOT owns or controls a local natural materials source such as a borrow pit or a stockpile of salvaged pavement material, etc., the materials may be designated for either optional or mandatory use; however, mandatory use will require a public interest finding (PIF) and FHWA's Division Administrator's concurrence.

In order to permit prospective bidders to properly prepare their bids, the location, cost, and any conditions to be met for obtaining materials that are made available to the contractor shall be stated in the bidding documents.

Mandatory Disposal Sites Normally, the disposal site for surplus excavated materials is to be of the contractor's choosing; although, an optional site(s) may be shown in the contract provisions. A mandatory site shall be specified when there is a finding by MDOT, with the concurrence of the Division Administrator, that such placement is the most economical or that the environment would be substantially enhanced without excessive cost. Discussion of the mandatory use of a disposal site in the environmental document may serve as the basis for the public interest finding.

Summarizing FHWA policy for the mandatory use of borrow or disposal sites:

- mandatory use of either requires a public interest finding and FHWA's Division Administrator's concurrence,
- mandatory use of either may be based on environmental consideration where the environment will be substantially enhanced without excessive additional cost, and
- where the use is based on environmental considerations, the discussion in the environmental document may be used as the basis for the public interest finding.

Factors to justify a public interest finding should include such items as cost effectiveness, system integrity, and local shortages of material.

C. Standard FHWA Contract Provisions - FHWA 1273

Unless expressly otherwise provided in the Bid Documents, the following "Required Contract Provisions, Federal Aid Construction Contracts", FHWA-1273, are hereby incorporated into the Bid Documents and Contract.

**********

Start of FHWA 1273 REQUIRED CONTRACT PROVISIONS
FEDERAL-AID CONSTRUCTION CONTRACTS(As revised through March 10, 1994)

I. GENERAL

1. These contract provisions shall apply to all work performed on the contract by the contractor's own organization and with the assistance of workers under the contractor's immediate superintendence and to all work performed on the contract by piecework, station work, or by subcontract.

2. Except as otherwise provided for in each section, the contractor shall insert in each subcontract all of the stipulations contained in these Required Contract Provisions, and further require their inclusion in any lower tier subcontract or purchase order that may in turn be made. The Required Contract Provisions shall not be incorporated by reference in any case. The prime contractor shall be responsible for compliance by any subcontractor or lower tier subcontractor with these Required Contract Provisions.

3. A breach of any of the stipulations contained in these Required Contract Provisions shall be sufficient grounds for termination of the contract.

4. A breach of the following clauses of the Required Contract Provisions may also be grounds for debarment as provided in 29 CFR 5.12:

   Section I, paragraph 2;
   Section IV, paragraphs 1, 2, 3, 4, and 7;
   Section V, paragraphs 1 and 2a through 2g.

5. Disputes arising out of the labor standards provisions of Section IV (except paragraph 5) and Section V of these Required Contract Provisions shall not be subject to the general disputes clause of this contract. Such disputes shall be resolved in accordance with the procedures of the U.S. Department of Labor (DOL) as set forth in 29 CFR 5, 6, and 7. Disputes within the meaning of this clause include disputes between the contractor (or any of its subcontractors) and the contracting agency, the DOL, or the contractor's employees or their representatives.

6. Selection of Labor: During the performance of this contract, the contractor shall not:

   a. discriminate against labor from any other State, possession, or territory of the United States (except for employment preference for Appalachian contracts, when applicable, as specified in Attachment A), or

   b. employ convict labor for any purpose within the limits of the project unless it is labor performed by convicts who are on parole, supervised release, or probation.

II. NONDISCRIMINATION (Applicable to all Federal-aid construction contracts and to all related subcontracts of $10,000 or more.)

1. Equal Employment Opportunity: Equal employment opportunity (EEO) requirements not to discriminate and to take affirmative action to assure equal opportunity as set forth under laws, executive orders, rules, regulations (28 CFR 35, 29 CFR 1630 and 41 CFR 60) and orders of the Secretary of Labor as modified by the provisions prescribed herein, and imposed pursuant to 23 U.S.C. 140 shall constitute the EEO and specific affirmative action standards for the contractor's project activities under this contract. The Equal Opportunity Construction Contract Specifications set forth under 41 CFR 60-4.3 and the provisions of the American Disabilities Act of 1990 (42 U.S.C. 12101 et seq.) set forth under 28 CFR 35 and 29 CFR 1630 are incorporated by reference in this contract. In the execution of this contract, the contractor agrees to comply with the following minimum specific requirement activities of EEO:
   a. The contractor will work with the State highway agency (SHA) and the Federal Government in carrying out EEO obligations and in their review of his/her activities under the contract.

   b. The contractor will accept as his operating policy the following statement:
   "It is the policy of this Company to assure that applicants are employed, and that employees are treated during employment, without regard to their race, religion, sex, color, national origin, age or disability. Such action shall include: employment,

upgrading, demotion, or transfer; recruitment or recruitment advertising; layoff or termination; rates of pay or other forms of compensation; and selection for training, including apprenticeship, preapprenticeship, and/or on-the-job training."

2. EEO Officer. The contractor will designate and make known to the SHA contracting officers an EEO Officer who will have the responsibility for and must be capable of effectively administering and promoting an active contractor program of EEO and who must be assigned adequate authority and responsibility to do so.

3. Dissemination of Policy. All members of the contractor's staff who are authorized to hire, supervise, promote, and discharge employees, or who recommend such action, or who are substantially involved in such action, will be made fully cognizant of, and will implement, the contractor's EEO policy and contractual responsibilities to provide EEO in each grade and classification of employment. To ensure that the above agreement will be met, the following actions will be taken as a minimum:

   a. Periodic meetings of supervisory and personnel office employees will be conducted before the start of work and then not less often than once every six months, at which time the contractor's EEO policy and its implementation will be reviewed and explained. The meetings will be conducted by the EEO Officer.

   b. All new supervisory or personnel office employees will be given a thorough indoctrination by the EEO Officer, covering all major aspects of the contractor's EEO obligations within thirty days following their reporting for duty with the contractor.

   c. All personnel who are engaged in direct recruitment for the project will be instructed by the EEO Officer in the contractor's procedures for locating and hiring minority group employees.

   d. Notices and posters setting forth the contractor's EEO policy will be placed in areas readily accessible to employees, applicants for employment and potential employees.

   e. The contractor's EEO policy and the procedures to implement such policy will be brought to the attention of employees by means of meetings, employee handbooks, or other appropriate means.

4. Recruitment. When advertising for employees, the contractor will include in all advertisements for employees the notation: "An Equal Opportunity Employer." All such advertisements will be placed in publications having a large circulation among minority groups in the area from which the project work force would normally be derived.

   a. The contractor will, unless precluded by a valid bargaining agreement, conduct systematic and direct recruitment through public and private employee referral sources likely to yield qualified minority group applicants. To meet this requirement, the contractor will identify sources of potential minority group employees, and establish with such identified sources procedures whereby minority group applicants may be referred to the contractor for employment consideration.

b. In the event the contractor has a valid bargaining agreement providing for exclusive hiring hall referrals, he is expected to observe the provisions of that agreement to the extent that the system permits the contractor's compliance with EEO contract provisions. (The DOL has held that where implementation of such agreements have the effect of discriminating against minorities or women, or obligates the contractor to do the same, such implementation violates Executive Order 11246, as amended.)

c. The contractor will encourage his present employees to refer minority group applicants for employment. Information and procedures with regard to referring minority group applicants will be discussed with employees.

5. Personnel Actions. Wages, working conditions, and employee benefits shall be established and administered, and personnel actions of every type, including hiring, upgrading, promotion, transfer, demotion, layoff, and termination, shall be taken without regard to race, color, religion, sex, national origin, age or disability. The following procedures shall be followed:

a. The contractor will conduct periodic inspections of project sites to insure that working conditions and employee facilities do not indicate discriminatory treatment of project site personnel.

b. The contractor will periodically evaluate the spread of wages paid within each classification to determine any evidence of discriminatory wage practices.

c. The contractor will periodically review selected personnel actions in depth to determine whether there is evidence of discrimination. Where evidence is found, the contractor will promptly take corrective action. If the review indicates that the discrimination may extend beyond the actions reviewed, such corrective action shall include all affected persons.

d. The contractor will promptly investigate all complaints of alleged discrimination made to the contractor in connection with his obligations under this contract, will attempt to resolve such complaints, and will take appropriate corrective action within a reasonable time. If the investigation indicates that the discrimination may affect persons other than the complainant, such corrective action shall include such other persons. Upon completion of each investigation, the contractor will inform every complainant of all of his avenues of appeal.

6. Training and Promotion.

a. The contractor will assist in locating, qualifying, and increasing the skills of minority group and women employees, and applicants for employment.

b. Consistent with the contractor's work force requirements and as permissible under Federal and State regulations, the contractor shall make full use of training programs, i.e., apprenticeship, and on-the-job training programs for the geographical area of contract performance. Where feasible, 25 percent of apprentices or trainees in each occupation shall be in their first year of apprenticeship or training. In the event a special provision

for training is provided under this contract, this subparagraph will be superseded as indicated in the special provision.

c. The contractor will advise employees and applicants for employment of available training programs and entrance requirements for each.

d. The contractor will periodically review the training and promotion potential of minority group and women employees and will encourage eligible employees to apply for such training and promotion.

7. Unions. If the contractor relies in whole or in part upon unions as a source of employees, the contractor will use his/her best efforts to obtain the cooperation of such unions to increase opportunities for minority groups and women within the unions, and to effect referrals by such unions of minority and female employees. Actions by the contractor either directly or through a contractor's association acting as agent will include the procedures set forth below:

   a. The contractor will use best efforts to develop, in cooperation with the unions, joint training programs aimed toward qualifying more minority group members and women for membership in the unions and increasing the skills of minority group employees and women so that they may qualify for higher paying employment.

   b. The contractor will use best efforts to incorporate an EEO clause into each union agreement to the end that such union will be contractually bound to refer applicants without regard to their race, color, religion, sex, national origin, age or disability.

   c. The contractor is to obtain information as to the referral practices and policies of the labor union except that to the extent such information is within the exclusive possession of the labor union and such labor union refuses to furnish such information to the contractor, the contractor shall so certify to the SHA and shall set forth what efforts have been made to obtain such information.

   d. In the event the union is unable to provide the contractor with a reasonable flow of minority and women referrals within the time limit set forth in the collective bargaining agreement, the contractor will, through independent recruitment efforts, fill the employment vacancies without regard to race, color, religion, sex, national origin, age or disability; making full efforts to obtain qualified and/or qualifiable minority group persons and women. (The DOL has held that it shall be no excuse that the union with which the contractor has a collective bargaining agreement providing for exclusive referral failed to refer minority employees.) In the event the union referral practice prevents the contractor from meeting the obligations pursuant to Executive Order 11246, as amended, and these special provisions, such contractor shall immediately notify the SHA.

8. Selection of Subcontractors, Procurement of Materials and Leasing of Equipment. The contractor shall not discriminate on the grounds of race, color, religion, sex, national origin, age or disability in the selection and retention of subcontractors, including procurement of materials and leases of equipment.

a. The contractor shall notify all potential subcontractors and suppliers of his/her EEO obligations under this contract.

b. Disadvantaged business enterprises (DBE), as defined in 49 CFR 23, shall have equal opportunity to compete for and perform subcontracts which the contractor enters into pursuant to this contract. The contractor will use his best efforts to solicit bids from and to utilize DBE subcontractors or subcontractors with meaningful minority group and female representation among their employees. Contractors shall obtain lists of DBE construction firms from SHA personnel.

c. The contractor will use his best efforts to ensure subcontractor compliance with their EEO obligations.

9. Records and Reports. The contractor shall keep such records as necessary to document compliance with the EEO requirements. Such records shall be retained for a period of three years following completion of the contract work and shall be available at reasonable times and places for inspection by authorized representatives of the SHA and the FHWA.

a. The records kept by the contractor shall document the following:

(1) The number of minority and non-minority group members and women employed in each work classification on the project;

(2) The progress and efforts being made in cooperation with unions, when applicable, to increase employment opportunities for minorities and women;

(3) The progress and efforts being made in locating, hiring, training, qualifying, and upgrading minority and female employees; and

(4) The progress and efforts being made in securing the services of DBE subcontractors or subcontractors with meaningful minority and female representation among their employees.

b. All such records must be retained for a period of three years following completion of the contract work and shall be available at reasonable times and places for inspection by authorized representatives of the MDOT and the Federal Highway Administration.

The Contractor will submit to the MDOT a report for the month of July, indicating the total hours worked by minority, women and non-minority group employees currently engaged in each work classification required by the contract work. This information is to be reported on Form PR-1391. If on-the-job training is being required by "Training Special Provision," the Contractor will be required to furnish Form FHWA-1409. The report is required for week ending July 15 and can be obtained from MDOT, is due by week ending August 20th. This report is to be furnished directly to MDOT - Civil Rights Office.

III. <u>NONSEGREGATED FACILITIES</u> (Applicable to all Federal-aid construction contracts and to all related subcontracts of $10,000 or more.)

a. By submission of this bid, the execution of this contract or subcontract, or the consummation of this material supply agreement or purchase order, as appropriate, the bidder, Federal-aid construction contractor, subcontractor, material supplier, or vendor, as appropriate, certifies that the firm does not maintain or provide for its employees any segregated facilities at any of its establishments, and that the firm does not permit its employees to perform their services at any location, under its control, where segregated facilities are maintained. The firm agrees that a breach of this certification is a violation of the EEO provisions of this contract. The firm further certifies that no employee will be denied access to adequate facilities on the basis of sex or disability.

b. As used in this certification, the term "segregated facilities" means any waiting rooms, work areas, restrooms and washrooms, restaurants and other eating areas, time clocks, locker rooms, and other storage or dressing areas, parking lots, drinking fountains, recreation or entertainment areas, transportation, and housing facilities provided for employees which are segregated by explicit directive, or are, in fact, segregated on the basis of race, color, religion, national origin, age or disability, because of habit, local custom, or otherwise. The only exception will be for the disabled when the demands for accessibility override (e.g. disabled parking).

c. The contractor agrees that it has obtained or will obtain identical certification from proposed subcontractors or material suppliers prior to award of subcontracts or consummation of material supply agreements of $10,000 or more and that it will retain such certifications in its files.

IV. PAYMENT OF PREDETERMINED MINIMUM WAGE (Applicable to all Federal-aid construction contracts exceeding $2,000 and to all related subcontracts, except for projects located on roadways classified as local roads or rural minor collectors, which are exempt.)

1. General:

   a. All mechanics and laborers employed or working upon the site of the work will be paid unconditionally and not less often than once a week and without subsequent deduction or rebate on any account [except such payroll deductions as are permitted by regulations (29 CFR 3) issued by the Secretary of Labor under the Copeland Act (40 U.S.C. 276c)] the full amounts of wages and bona fide fringe benefits (or cash equivalents thereof) due at time of payment. The payment shall be computed at wage rates not less than those contained in the wage determination of the Secretary of Labor (hereinafter "the wage determination") which is attached hereto and made a part hereof, regardless of any contractual relationship which may be alleged to exist between the contractor or its subcontractors and such laborers and mechanics. The wage determination (including any additional classifications and wage rates conformed under paragraph 2 of this Section IV and the DOL poster (WH-1321) or Form FHWA-1495) shall be posted at all times by the contractor and its subcontractors at the site of the work in a prominent and accessible place where it can be easily seen by the workers. For the purpose of this Section, contributions made or costs reasonably anticipated for bona fide fringe benefits under Section 1(b)(2) of the Davis-Bacon Act (40 U.S.C. 276a) on behalf of laborers or mechanics are considered wages paid to such laborers or mechanics, subject to the

provisions of Section IV, paragraph 3b, hereof. Also, for the purpose of this Section, regular contributions made or costs incurred for more than a weekly period (but not less often than quarterly) under plans, funds, or programs, which cover the particular weekly period, are deemed to be constructively made or incurred during such weekly period. Such laborers and mechanics shall be paid the appropriate wage rate and fringe benefits on the wage determination for the classification of work actually performed, without regard to skill, except as provided in paragraphs 4 and 5 of this Section IV.

b. Laborers or mechanics performing work in more than one classification may be compensated at the rate specified for each classification for the time actually worked therein, provided, that the employer's payroll records accurately set forth the time spent in each classification in which work is performed.

c. All rulings and interpretations of the Davis-Bacon Act and related acts contained in 29 CFR 1, 3, and 5 are herein incorporated by reference in this contract.

2. Classification:

a. The SHA contracting officer shall require that any class of laborers or mechanics employed under the contract, which is not listed in the wage determination, shall be classified in conformance with the wage determination.

b. The contracting officer shall approve an additional classification, wage rate and fringe benefits only when the following criteria have been met:

(1) the work to be performed by the additional classification requested is not performed by a classification in the wage determination;

(2) the additional classification is utilized in the area by the construction industry;

(3) the proposed wage rate, including any bona fide fringe benefits, bears a reasonable relationship to the wage rates contained in the wage determination; and

(4) with respect to helpers, when such a classification prevails in the area in which the work is performed.

c. If the contractor or subcontractors, as appropriate, the laborers and mechanics (if known) to be employed in the additional classification or their representatives, and the contracting officer agree on the classification and wage rate (including the amount designated for fringe benefits where appropriate), a report of the action taken shall be sent by the contracting officer to the DOL, Administrator of the Wage and Hour Division, Employment Standards Administration, Washington, D.C. 20210. The Wage and Hour Administrator, or an authorized representative, will approve, modify, or disapprove every additional classification action within 30 days of receipt and so advise the contracting officer or will notify the contracting officer within the 30-day period that additional time is necessary.

d. In the event the contractor or subcontractors, as appropriate, the laborers or mechanics to be employed in the additional classification or their representatives, and the contracting officer do not agree on the proposed classification and wage rate (including the amount designated for fringe benefits, where appropriate), the contracting officer shall refer the questions, including the views of all interested parties and the recommendation of the contracting officer, to the Wage and Hour Administrator for determination. Said Administrator, or an authorized representative, will issue a determination within 30 days of receipt and so advise the contracting officer or will notify the contracting officer within the 30-day period that additional time is necessary

e. The wage rate (including fringe benefits where appropriate) determined pursuant to paragraph 2c or 2d of this Section IV shall be paid to all workers performing work in the additional classification from the first day on which work is performed in the classification.

3. Payment of Fringe Benefits:

a. Whenever the minimum wage rate prescribed in the contract for a class of laborers or mechanics includes a fringe benefit which is not expressed as an hourly rate, the contractor or subcontractors, as appropriate, shall either pay the benefit as stated in the wage determination or shall pay another bona fide fringe benefit or an hourly case equivalent thereof.

b. If the contractor or subcontractor, as appropriate, does not make payments to a trustee or other third person, he/she may consider as a part of the wages of any laborer or mechanic the amount of any costs reasonably anticipated in providing bona fide fringe benefits under a plan or program, provided, that the Secretary of Labor has found, upon the written request of the contractor, that the applicable standards of the Davis-Bacon Act have been met. The Secretary of Labor may require the contractor to set aside in a separate account assets for the meeting of obligations under the plan or program.

4. Apprentices and Trainees (Programs of the U.S. DOL) and Helpers:

a. Apprentices:

(1) Apprentices will be permitted to work at less than the predetermined rate for the work they performed when they are employed pursuant to and individually registered in a bona fide apprenticeship program registered with the DOL, Employment and Training Administration, Bureau of Apprenticeship and Training, or with a State apprenticeship agency recognized by the Bureau, or if a person is employed in his/her first 90 days of probationary employment as an apprentice in such an apprenticeship program, who is not individually registered in the program, but who has been certified by the Bureau of Apprenticeship and Training or a State apprenticeship agency (where appropriate) to be eligible for probationary employment as an apprentice.

(2) The allowable ratio of apprentices to journeyman-level employees on the job site in any craft classification shall not be greater than the ratio permitted to the contractor

as to the entire work force under the registered program. Any employee listed on a payroll at an apprentice wage rate, who is not registered or otherwise employed as stated above, shall be paid not less than the applicable wage rate listed in the wage determination for the classification of work actually performed. In addition, any apprentice performing work on the job site in excess of the ratio permitted under the registered program shall be paid not less than the applicable wage rate on the wage determination for the work actually performed. Where a contractor or subcontractor is performing construction on a project in a locality other than that in which its program is registered, the ratios and wage rates (expressed in percentages of the journeyman-level hourly rate) specified in the contractor's or subcontractor's registered program shall be observed.

(3) Every apprentice must be paid at not less than the rate specified in the registered program for the apprentice's level of progress, expressed as a percentage of the journeyman-level hourly rate specified in the applicable wage determination. Apprentices shall be paid fringe benefits in accordance with the provisions of the apprenticeship program. If the apprenticeship program does not specify fringe benefits, apprentices must be paid the full amount of fringe benefits listed on the wage determination for the applicable classification. If the Administrator for the Wage and Hour Division determines that a different practice prevails for the applicable apprentice classification, fringes shall be paid in accordance with that determination.

(4) In the event the Bureau of Apprenticeship and Training, or a State apprenticeship agency recognized by the Bureau, withdraws approval of an apprenticeship program, the contractor or subcontractor will no longer be permitted to utilize apprentices at less than the applicable predetermined rate for the comparable work performed by regular employees until an acceptable program is approved.

b. Trainees:

(1) Except as provided in 29 CFR 5.16, trainees will not be permitted to work at less than the predetermined rate for the work performed unless they are employed pursuant to and individually registered in a program which has received prior approval, evidenced by formal certification by the DOL, Employment and Training Administration.

(2) The ratio of trainees to journeyman-level employees on the job site shall not be greater than permitted under the plan approved by the Employment and Training Administration. Any employee listed on the payroll at a trainee rate who is not registered and participating in a training plan approved by the Employment and Training Administration shall be paid not less than the applicable wage rate on the wage determination for the classification of work actually performed. In addition, any trainee performing work on the job site in excess of the ratio permitted under the registered program shall be paid not less than the applicable wage rate on the wage determination for the work actually performed.

(3) Every trainee must be paid at not less than the rate specified in the approved program for his/her level of progress, expressed as a percentage of the journeyman-level hourly rate specified in the applicable wage determination. Trainees shall be paid fringe benefits in accordance with the provisions of the trainee program. If the trainee program does not mention fringe benefits, trainees shall be paid the full amount of fringe benefits listed on the wage determination unless the Administrator of the Wage and Hour Division determines that there is an apprenticeship program associated with the corresponding journeyman-level wage rate on the wage determination which provides for less than full fringe benefits for apprentices, in which case such trainees shall receive the same fringe benefits as apprentices.

(4) In the event the Employment and Training Administration withdraws approval of a training program, the contractor or subcontractor will no longer be permitted to utilize trainees at less than the applicable predetermined rate for the work performed until an acceptable program is approved.

c. Helpers. Helpers will be permitted to work on a project if the helper classification is specified and defined on the applicable wage determination or is approved pursuant to the conformance procedure set forth in Section IV.2. Any worker listed on a payroll at a helper wage rate, who is not a helper under a approved definition, shall be paid not less than the applicable wage rate on the wage determination for the classification of work actually performed.

5. Apprentices and Trainees (Programs of the U.S. DOT). Apprentices and trainees working under apprenticeship and skill training programs which have been certified by the Secretary of Transportation as promoting EEO in connection with Federal-aid highway construction programs are not subject to the requirements of paragraph 4 of this Section IV. The straight time hourly wage rates for apprentices and trainees under such programs will be established by the particular programs. The ratio of apprentices and trainees to journeymen shall not be greater than permitted by the terms of the particular program.

6. Withholding. The SHA shall upon its own action or upon written request of an authorized representative of the DOL withhold, or cause to be withheld, from the contractor or subcontractor under this contract or any other Federal contract with the same prime contractor, or any other Federally-assisted contract subject to Davis-Bacon prevailing wage requirements which is held by the same prime contractor, as much of the accrued payments or advances as may be considered necessary to pay laborers and mechanics, including apprentices, trainees, and helpers, employed by the contractor or any subcontractor the full amount of wages required by the contract. In the event of failure to pay any laborer or mechanic, including any apprentice, trainee, or helper, employed or working on the site of the work, all or part of the wages required by the contract, the SHA contracting officer may, after written notice to the contractor, take such action as may be necessary to cause the suspension of any further payment, advance, or guarantee of funds until such violations have ceased.

7. Overtime Requirements. No contractor or subcontractor contracting for any part of the contract work which may require or involve the employment of laborers, mechanics, watchmen, or guards (including apprentices, trainees, and helpers described in paragraphs 4

and 5 above) shall require or permit any laborer, mechanic, watchman, or guard in any workweek in which he/she is employed on such work, to work in excess of 40 hours in such workweek unless such laborer, mechanic, watchman, or guard receives compensation at a rate not less than one-and-one-half times his/her basic rate of pay for all hours worked in excess of 40 hours in such workweek.

8. Violation. Liability for Unpaid Wages; Liquidated Damages: In the event of any violation of the clause set forth in paragraph 7 above, the contractor and any subcontractor responsible thereof shall be liable to the affected employee for his/her unpaid wages. In addition, such contractor and subcontractor shall be liable to the United States (in the case of work done under contract for the District of Columbia or a territory, to such District or to such territory) for liquidated damages. Such liquidated damages shall be computed with respect to each individual laborer, mechanic, watchman, or guard employed in violation of the clause set forth in paragraph 7, in the sum of $10 for each calendar day on which such employee was required or permitted to work in excess of the standard work week of 40 hours without payment of the overtime wages required by the clause set forth in paragraph 7.

9. Withholding for Unpaid Wages and Liquidated Damages. The SHA shall upon its own action or upon written request of any authorized representative of the DOL withhold, or cause to be withheld, from any monies payable on account of work performed by the contractor or subcontractor under any such contract or any other Federal contract with the same prime contractor, or any other Federally-assisted contract subject to the Contract Work Hours and Safety Standards Act, which is held by the same prime contractor, such sums as may be determined to be necessary to satisfy any liabilities of such contractor or subcontractor for unpaid wages and liquidated damages as provided in the clause set forth in paragraph 8 above.

V. STATEMENTS AND PAYROLLS (Applicable to all Federal-aid construction contracts exceeding $2,000 and to all related subcontracts, except for projects located on roadways classified as local roads or rural collectors, which are exempt.)

1. Compliance with Copeland Regulations (29 CFR 3). The contractor shall comply with the Copeland Regulations of the Secretary of Labor which are herein incorporated by reference.

2. Payrolls and Payroll Records:

   a. Payrolls and basic records relating thereto shall be maintained by the contractor and each subcontractor during the course of the work and preserved for a period of 3 years from the date of completion of the contract for all laborers, mechanics, apprentices, trainees, watchmen, helpers, and guards working at the site of the work.

   b. The payroll records shall contain the name, social security number, and address of each such employee; his or her correct classification; hourly rates of wages paid (including rates of contributions or costs anticipated for bona fide fringe benefits or cash equivalent thereof the types described in Section 1(b)(2)(B) of the Davis Bacon Act); daily and weekly number of hours worked; deductions made; and actual wages paid. In addition, for Appalachian contracts, the payroll records shall contain a notation indicating whether the employee does, or does not, normally reside in the labor area as defined in

Attachment A, paragraph 1. Whenever the Secretary of Labor, pursuant to Section IV, paragraph 3b, has found that the wages of any laborer or mechanic include the amount of any costs reasonably anticipated in providing benefits under a plan or program described in Section 1(b)(2)(B) of the Davis Bacon Act, the contractor and each subcontractor shall maintain records which show that the commitment to provide such benefits is enforceable, that the plan or program is financially responsible, that the plan or program has been communicated in writing to the laborers or mechanics affected, and show the cost anticipated or the actual cost incurred in providing benefits. Contractors or subcontractors employing apprentices or trainees under approved programs shall maintain written evidence of the registration of apprentices and trainees, and ratios and wage rates prescribed in the applicable programs.

c. Each contractor and subcontractor shall furnish, each week in which any contract work is performed, to the SHA resident engineer a payroll of wages paid each of its employees (including apprentices, trainees, and helpers, described in Section IV, paragraphs 4 and 5, and watchmen and guards engaged on work during the preceding weekly payroll period). The payroll submitted shall set out accurately and completely all of the information required to be maintained under paragraph 2b of this Section V. This information may be submitted in any form desired. Optional Form WH-347 is available for this purpose and may be purchased from the Superintendent of Documents (Federal stock number 029-005-0014-1), U.S. Government Printing Office, Washington, D.C. 20402. The prime contractor is responsible for the submission of copies of payrolls by all subcontractors.

d. Each payroll submitted shall be accompanied by a "Statement of Compliance," signed by the contractor or subcontractor or his/her agent who pays or supervises the payment of the persons employed under the contract and shall certify the following:

   (1) that the payroll for the payroll period contains the information required to be maintained under paragraph 2b of this Section V and that such information is correct and complete;

   (2) that such laborer or mechanic (including each helper, apprentice, and trainee) employed on the contract during the payroll period has been paid the full weekly wages earned, without rebate, either directly or indirectly, and that no deductions have been made either directly or indirectly from the full wages earned, other than permissible deductions as set forth in the Regulations, 29 CFR 3;

   (3) that each laborer or mechanic has been paid not less that the applicable wage rate and fringe benefits or cash equivalent for the classification of worked performed, as specified in the applicable wage determination incorporated into the contract.

e. The weekly submission of a properly executed certification set forth on the reverse side of Optional Form WH-347 shall satisfy the requirement for submission of the "Statement of Compliance" required by paragraph 2d of this Section V.

f. The falsification of any of the above certifications may subject the contractor to civil or criminal prosecution under 18 U.S.C. 1001 and 31 U.S.C. 231.

g. The contractor or subcontractor shall make the records required under paragraph 2b of this Section V available for inspection, copying, or transcription by authorized representatives of the SHA, the FHWA, or the DOL, and shall permit such representatives to interview employees during working hours on the job. If the contractor or subcontractor fails to submit the required records or to make them available, the SHA, the FHWA, the DOL, or all may, after written notice to the contractor, sponsor, applicant, or owner, take such actions as may be necessary to cause the suspension of any further payment, advance, or guarantee of funds. Furthermore, failure to submit the required records upon request or to make such records available may be grounds for debarment action pursuant to 29 CFR 5.12.

## VI. RECORD OF MATERIALS, SUPPLIES, AND LABOR

1. On all Federal-aid contracts on the National Highway System, except those which provide solely for the installation of protective devices at railroad grade crossings, those which are constructed on a force account or direct labor basis, highway beautification contracts, and contracts for which the total final construction cost for roadway and bridge is less than $1,000,000 (23 CFR 635) the contractor shall:

   a. Become familiar with the list of specific materials and supplies contained in Form FHWA-47, "Statement of Materials and Labor Used by Contractor of Highway Construction Involving Federal Funds," prior to the commencement of work under this contract.

   b. Maintain a record of the total cost of all materials and supplies purchased for and incorporated in the work, and also of the quantities of those specific materials and supplies listed on Form FHWA-47, and in the units shown on Form FHWA-47.

   c. Furnish, upon the completion of the contract, to the SHA resident engineer on Form FHWA-47 together with the data required in paragraph 1b relative to materials and supplies, a final labor summary of all contract work indicating the total hours worked and the total amount earned.

2. At the prime contractor's option, either a single report covering all contract work or separate reports for the contractor and for each subcontract shall be submitted.

## VII. SUBLETTING OR ASSIGNING THE CONTRACT

1. The contractor shall perform with its own organization contract work amounting to not less than 30 percent (or a greater percentage if specified elsewhere in the contract) of the total original contract price, excluding any specialty items designated by the State. Specialty items may be performed by subcontract and the amount of any such specialty items performed may be deducted from the total original contract price before computing the amount of work required to be performed by the contractor's own organization (23 CFR 635).

   a. "Its own organization" shall be construed to include only workers employed and paid directly by the prime contractor and equipment owned or rented by the prime contractor,

with or without operators. Such term does not include employees or equipment of a subcontractor, assignee, or agent of the prime contractor.

b. "Specialty Items" shall be construed to be limited to work that requires highly specialized knowledge, abilities, or equipment not ordinarily available in the type of contracting organizations qualified and expected to bid on the contract as a whole and in general are to be limited to minor components of the overall contract.

2. The contract amount upon which the requirements set forth in paragraph 1 of Section VII is computed includes the cost of material and manufactured products which are to be purchased or produced by the contractor under the contract provisions.

3. The contractor shall furnish (a) a competent superintendent or supervisor who is employed by the firm, has full authority to direct performance of the work in accordance with the contract requirements, and is in charge of all construction operations (regardless of who performs the work) and (b) such other of its own organizational resources (supervision, management, and engineering services) as the SHA contracting officer determines is necessary to assure the performance of the contract.

4. No portion of the contract shall be sublet, assigned or otherwise disposed of except with the written consent of the SHA contracting officer, or authorized representative, and such consent when given shall not be construed to relieve the contractor of any responsibility for the fulfillment of the contract. Written consent will be given only after the SHA has assured that each subcontract is evidenced in writing and that it contains all pertinent provisions and requirements of the prime contract.

## VIII. SAFETY: ACCIDENT PREVENTION

1. In the performance of this contract the contractor shall comply with all applicable Federal, State, and local laws governing safety, health, and sanitation (23 CFR 635). The contractor shall provide all safeguards, safety devices and protective equipment and take any other needed actions as it determines, or as the SHA contracting officer may determine, to be reasonably necessary to protect the life and health of employees on the job and the safety of the public and to protect property in connection with the performance of the work covered by the contract.

2. It is a condition of this contract, and shall be made a condition of each subcontract, which the contractor enters into pursuant to this contract, that the contractor and any subcontractor shall not permit any employee, in performance of the contract, to work in surroundings or under conditions which are unsanitary, hazardous or dangerous to his/her health or safety, as determined under construction safety and health standards (29 CFR 1926) promulgated by the Secretary of Labor, in accordance with Section 107 of the Contract Work Hours and Safety Standards Act (40 U.S.C. 333).

3. Pursuant to 29 CFR 1926.3, it is a condition of this contract that the Secretary of Labor or authorized representative thereof, shall have right of entry to any site of contract performance to inspect or investigate the matter of compliance with the construction safety and health

standards and to carry out the duties of the Secretary under Section 107 of the Contract Work Hours and Safety Standards Act (40 U.S.C. 333).

IX. FALSE STATEMENTS CONCERNING HIGHWAY PROJECTS In order to assure high quality and durable construction in conformity with approved plans and specifications and a high degree of reliability on statements and representations made by engineers, contractors, suppliers, and workers on Federal-aid highway projects, it is essential that all persons concerned with the project perform their functions as carefully, thoroughly, and honestly as possible. Willful falsification, distortion, or misrepresentation with respect to any facts related to the project is a violation of Federal law. To prevent any misunderstanding regarding the seriousness of these and similar acts, the following notice shall be posted on each Federal-aid highway project (23 CFR 635) in one or more places where it is readily available to all persons concerned with the project:

NOTICE TO ALL PERSONNEL ENGAGED ON FEDERAL-AID HIGHWAY PROJECTS

18 U.S.C. 1020 reads as follows:

*"Whoever, being an officer, agent, or employee of the United States, or of any State or Territory, or whoever, whether a person, association, firm, or corporation, knowingly makes any false statement, false representation, or false report as to the character, quality, quantity, or cost of the material used or to be used, or the quantity or quality of the work performed or to be performed, or the cost thereof in connection with the submission of plans, maps, specifications, contracts, or costs of construction on any highway or related project submitted for approval to the Secretary of Transportation; or*

*Whoever knowingly makes any false statement, false representation, false report or false claim with respect to the character, quality, quantity, or cost of any work performed or to be performed, or materials furnished or to be furnished, in connection with the construction of any highway or related project approved by the Secretary of Transportation; or*

*Whoever knowingly makes any false statement or false representation as to material fact in any statement, certificate, or report submitted pursuant to provisions of the Federal-aid Roads Act approved July 1, 1916, (39 Stat. 355), as amended and supplemented;*

*Shall be fined not more that $10,000 or imprisoned not more than 5 years or both."*

X. IMPLEMENTATION OF CLEAN AIR ACT AND FEDERAL WATER POLLUTION CONTROL ACT (Applicable to all Federal-aid construction contracts and to all related subcontracts of $100,000 or more.)

By submission of this bid or the execution of this contract, or subcontract, as appropriate, the bidder, Federal-aid construction contractor, or subcontractor, as appropriate, will be deemed to have stipulated as follows:

1. That any facility that is or will be utilized in the performance of this contract, unless such contract is exempt under the Clean Air Act, as amended (42 U.S.C. 1857 et seq., as amended by Pub.L. 91-604), and under the Federal Water Pollution Control Act, as amended (33 U.S.C. 1251 et seq., as amended by Pub.L. 92-500), Executive Order 11738, and regulations

in implementation thereof (40 CFR 15) is not listed, on the date of contract award, on the U.S. Environmental Protection Agency (EPA) List of Violating Facilities pursuant to 40 CFR 15.20.

2. That the firm agrees to comply and remain in compliance with all the requirements of Section 114 of the Clean Air Act and Section 308 of the Federal Water Pollution Control Act and all regulations and guidelines listed thereunder.

3. That the firm shall promptly notify the SHA of the receipt of any communication from the Director, Office of Federal Activities, EPA, indicating that a facility that is or will be utilized for the contract is under consideration to be listed on the EPA List of Violating Facilities.

4. That the firm agrees to include or cause to be included the requirements of paragraph 1 through 4 of this Section X in every nonexempt subcontract, and further agrees to take such action as the government may direct as a means of enforcing such requirements.

## XI. CERTIFICATION REGARDING DEBARMENT, SUSPENSION, INELIGIBILITY AND VOLUNTARY EXCLUSION

1. Instructions for Certification - Primary Covered Transactions:
(Applicable to all Federal-aid contracts - 49 CFR 29)

   a. By signing and submitting this proposal, the prospective primary participant is providing the certification set out below.

   b. The inability of a person to provide the certification set out below will not necessarily result in denial of participation in this covered transaction. The prospective participant shall submit an explanation of why it cannot provide the certification set out below. The certification or explanation will be considered in connection with the department or agency's determination whether to enter into this transaction. However, failure of the prospective primary participant to furnish a certification or an explanation shall disqualify such a person from participation in this transaction.

   c. The certification in this clause is a material representation of fact upon which reliance was placed when the department or agency determined to enter into this transaction. If it is later determined that the prospective primary participant knowingly rendered an erroneous certification, in addition to other remedies available to the Federal Government, the department or agency may terminate this transaction for cause of default.

   d. The prospective primary participant shall provide immediate written notice to the department or agency to whom this proposal is submitted if any time the prospective primary participant learns that its certification was erroneous when submitted or has become erroneous by reason of changed circumstances.

   e. The terms "covered transaction," "debarred," "suspended," "ineligible," "lower tier covered transaction," "participant," "person," "primary covered transaction," "principal," "proposal," and "voluntarily excluded," as used in this clause, have the meanings set out

in the Definitions and Coverage sections of rules implementing Executive Order 12549. You may contact the department or agency to which this proposal is submitted for assistance in obtaining a copy of those regulations.

f. The prospective primary participant agrees by submitting this proposal that, should the proposed covered transaction be entered into, it shall not knowingly enter into any lower tier covered transaction with a person who is debarred, suspended, declared ineligible, or voluntarily excluded from participation in this covered transaction, unless authorized by the department or agency entering into this transaction.

g. The prospective primary participant further agrees by submitting this proposal that it will include the clause titled "Certification Regarding Debarment, Suspension, Ineligibility and Voluntary Exclusion-Lower Tier Covered Transaction," provided by the department or agency entering into this covered transaction, without modification, in all lower tier covered transactions and in all solicitations for lower tier covered transactions.

h. A participant in a covered transaction may rely upon a certification of a prospective participant in a lower tier covered transaction that is not debarred, suspended, ineligible, or voluntarily excluded from the covered transaction, unless it knows that the certification is erroneous. A participant may decide the method and frequency by which it determines the eligibility of its principals. Each participant may, but is not required to, check the nonprocurement portion of the "Lists of Parties Excluded From Federal Procurement or Nonprocurement Programs" (Nonprocurement List) which is compiled by the General Services Administration.

i. Nothing contained in the foregoing shall be construed to require establishment of a system of records in order to render in good faith the certification required by this clause. The knowledge and information of participant is not required to exceed that which is normally possessed by a prudent person in the ordinary course of business dealings.

j. Except for transactions authorized under paragraph f of these instructions, if a participant in a covered transaction knowingly enters into a lower tier covered transaction with a person who is suspended, debarred, ineligible, or voluntarily excluded from participation in this transaction, in addition to other remedies available to the Federal Government, the department or agency may terminate this transaction for cause or default.

**********

Certification Regarding Debarment, Suspension, Ineligibility and Voluntary Exclusion--
Primary Covered Transactions

1. The prospective primary participant certifies to the best of its knowledge and belief, that it and its principals:

a. Are not presently debarred, suspended, proposed for debarment, declared ineligible, or voluntarily excluded from covered transactions by any Federal department or agency;

b. Have not within a 3-year period preceding this proposal been convicted of or had a civil judgment rendered against them for commission of fraud or a criminal offense in connection with obtaining, attempting to obtain, or performing a public (Federal, State or

local) transaction or contract under a public transaction; violation of Federal or State antitrust statutes or commission of embezzlement, theft, forgery, bribery, falsification or destruction of records, making false statements, or receiving stolen property;

c. Are not presently indicted for or otherwise criminally or civilly charged by a governmental entity (Federal, State or local) with commission of any of the offenses enumerated in paragraph 1b of this certification; and

d. Have not within a 3-year period preceding this application/proposal had one or more public transactions (Federal, State or local) terminated for cause or default.

2. Where the prospective primary participant is unable to certify to any of the statements in this certification, such prospective participant shall attach an explanation to this proposal.

**********

2. Instructions for Certification - Lower Tier Covered Transactions: (Applicable to all subcontracts, purchase orders and other lower tier transactions of $25,000 or more - 49 CFR 29)

a. By signing and submitting this proposal, the prospective lower tier is providing the certification set out below.

b. The certification in this clause is a material representation of fact upon which reliance was placed when this transaction was entered into. If it is later determined that the prospective lower tier participant knowingly rendered an erroneous certification, in addition to other remedies available to the Federal Government, the department, or agency with which this transaction originated may pursue available remedies, including suspension and/or debarment.

c. The prospective lower tier participant shall provide immediate written notice to the person to which this proposal is submitted if at any time the prospective lower tier participant learns that its certification was erroneous by reason of changed circumstances.

d. The terms "covered transaction," "debarred," "suspended," "ineligible," "primary covered transaction," "participant," "person," "principal," "proposal," and "voluntarily excluded," as used in this clause, have the meanings set out in the Definitions and Coverage sections of rules implementing Executive Order 12549. You may contact the person to which this proposal is submitted for assistance in obtaining a copy of those regulations.

e. The prospective lower tier participant agrees by submitting this proposal that, should the proposed covered transaction be entered into, it shall not knowingly enter into any lower tier covered transaction with a person who is debarred, suspended, declared ineligible, or voluntarily excluded from participation in this covered transaction, unless authorized by the department or agency with which this transaction originated.

f. The prospective lower tier participant further agrees by submitting this proposal that it will include this clause titled "Certification Regarding Debarment, Suspension, Ineligibility and Voluntary Exclusion-Lower Tier Covered Transaction," without modification, in all lower tier covered transactions and in all solicitations for lower tier covered transactions.

g. A participant in a covered transaction may rely upon a certification of a prospective participant in a lower tier covered transaction that is not debarred, suspended, ineligible, or voluntarily excluded from the covered transaction, unless it knows that the certification is erroneous. A participant may decide the method and frequency by which it determines the eligibility of its principals. Each participant may, but is not required to, check the Nonprocurement List.

h. Nothing contained in the foregoing shall be construed to require establishment of a system of records in order to render in good faith the certification required by this clause. The knowledge and information of participant is not required to exceed that which is normally possessed by a prudent person in the ordinary course of business dealings.

i. Except for transactions authorized under paragraph e of these instructions, if a participant in a covered transaction knowingly enters into a lower tier covered transaction with a person who is suspended, debarred, ineligible, or voluntarily excluded from participation in this transaction, in addition to other remedies available to the Federal Government, the department or agency with which this transaction originated may pursue available remedies, including suspension and/or debarment.

**********

Certification Regarding Debarment, Suspension, Ineligibility and Voluntary Exclusion--
Lower Tier Covered Transactions:

1. The prospective lower tier participant certifies, by submission of this proposal, that neither it nor its principals is presently debarred, suspended, proposed for debarment, declared ineligible, or voluntarily excluded from participation in this transaction by any Federal department or agency.

2. Where the prospective lower tier participant is unable to certify to any of the statements in this certification, such prospective participant shall attach an explanation to this proposal.

**********

XII. CERTIFICATION REGARDING USE OF CONTRACT FUNDS FOR LOBBYING
(Applicable to all Federal-aid construction contracts and to all related subcontracts which exceed $100,000 - 49 CFR 20)

1. The prospective participant certifies, by signing and submitting this bid or proposal, to the best of his or her knowledge and belief, that:
   a. No Federal appropriated funds have been paid or will be paid, by or on behalf of the undersigned, to any person for influencing or attempting to influence an officer or employee of any Federal agency, a Member of Congress, an officer or employee of Congress, or an employee of a Member of Congress in connection with the awarding of any Federal contract, the making of any Federal grant, the making of any Federal loan, the entering into of any cooperative agreement, and the extension, continuation, renewal, amendment, or modification of any Federal contract, grant, loan, or cooperative agreement.

   b. If any funds other than Federal appropriated funds have been paid or will be paid to any person for influencing or attempting to influence an officer or employee of any Federal agency, a Member of Congress, an officer or employee of Congress, or an employee of a

Member of Congress in connection with this Federal contract, grant, loan, or cooperative agreement, the undersigned shall complete and submit Standard Form-LLL, "Disclosure Form to Report Lobbying," in accordance with its instructions.

2. This certification is a material representation of fact upon which reliance was placed when this transaction was made or entered into. Submission of this certification is a prerequisite for making or entering into this transaction imposed by 31 U.S.C. 1352. Any person who fails to file the required certification shall be subject to a civil penalty of not less than $10,000 and not more than $100,000 for each such failure.

3. The prospective participant also agrees by submitting his or her bid or proposal that he or she shall require that the language of this certification be included in all lower tier subcontracts, which exceed $100,000 and that all such recipients shall certify and disclose accordingly.

End of FHWA 1273