# STATE OF MAINE
# DEPARTMENT OF TRANSPORTATION

## SPECIFICATIONS

Design: Load and Resistance Factor Design per AASHTO LRFD Bridge Design Specifications, Fourth Edition 2007 and Interim Specifications through 2009.

## DESIGN LOADING

Live Load ..... HL - 93 Modified

## TRAFFIC DATA (I-95 NORTHBOUND)

| | |
|---|---|
| Current (2010) AADT | 14,850 |
| Future (2030) AADT | 20,800 |
| DHV - % of AADT | 9.6 |
| Design Hour Volume | 1,425 |
| Heavy Trucks (% of AADT) | 5 |
| Heavy Trucks (% of DHV) | X |
| Directional Distribution (% of DHV) | 100 |
| 18 kip Equivalent P 2.0 | X |
| 18 kip Equivalent P 2.5 | X |
| Design Speed (mph) | 65 |

## MATERIALS

| | |
|---|---|
| Concrete: | |
| Curbs, Precast Deck Panels & Transition Barriers | Class "LP" |
| Precast Deck Panels | Class "P" |
| All Other | As Noted |
| Reinforcing Steel | ASTM A 615/A 615M, Grade 60 |

## BASIC DESIGN STRESSES

| | |
|---|---|
| Concrete Superstructure (unless noted otherwise) | f 'c = 5,075 psi |
| Concrete Substructure (unless noted otherwise) | f 'c = 4,350 psi |
| Precast Concrete | f 'c = 4,350 psi |
| Reinforcing Steel | f y = 60,000 psi |

## UTILITIES

Central Maine Power Company
Fairpoint Communications
Mid-Maine Communications
Greater Augusta Utility District
Oxford Networks

## MAINTENANCE OF TRAFFIC

See Traffic Control Plans for Maintainance of Traffic Requirements.

# AUGUSTA
# KENNEBEC COUNTY
# INTERSTATE I-95 BRIDGE NB
## OVER
# ROUTE 8/11/27
## PROJECT NO. BR-1508(800)X, PIN 15088.00

## PROJECT LENGTH 0.027 mi.
## BRIDGE DECK REPLACEMENT
## AND SUBSTRUCTURE REHABILITATION
## BRIDGE NO. 5793

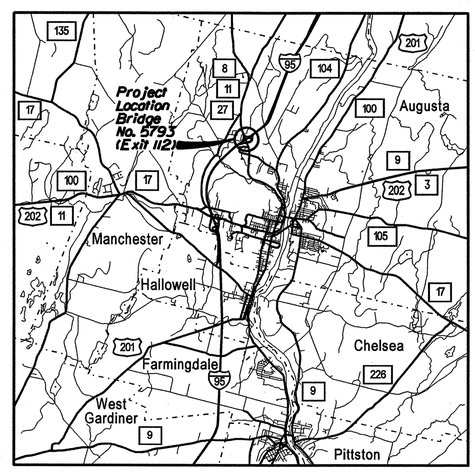


LOCATION MAP

2 0 2 4
Scale of Miles

## LIST OF DRAWINGS


| | |
|---|---|
| Title Sheet | 1 |
| Construction Notes | 2 |
| Bridge Construction Phasing | 3 |
| General Plan | 4 |
| Abutment Details | 5 |
| Pier Repair Details | 6 |
| Pier Details and Bridge Drain Details | 7 |
| Deck Plan Layout | 8 |
| Deck Details | 9 |
| Rail Layout | 10 |
| Chain Link Snow Fence | 11 |
| Temporary Concrete Barrier (1 of 2) | 12 |
| Temporary Concrete Barrier (2 of 2) | 13 |
| Reinforcing Steel Schedule | 14 |
| Traffic Control Phasing Notes | 15 |
| Regional Detour Plan | 16-17 |
| Traffic Control Plans | 18-23 |


STATE OF MAINE
DEPARTMENT OF TRANSPORTATION

| APPROVED | DATE |
|---|---|
| COMMISSIONER: | 4/27/10 |
| CHIEF ENGINEER: | 4/26/10 |

STATE OF MAINE TIMOTHY J. BRYANT No. 12090 LICENSED PROFESSIONAL ENGINEER

Timothy J. Bryant
SIGNATURE
12090
P.E. NUMBER
04-19-2010
DATE

PROJECT INFORMATION

| | |
|---|---|
| PROGRAM | MULTIMODAL |
| PROJECT MANAGER | AURELE GORNEAU, II |
| DESIGNER | SALLY M. GUNN |
| CONSULTANT | VHB |
| PROJECT RESIDENT | |
| CONTRACTOR | |
| PROJECT COMPLETION DATE | |

PIN 15088.00

BR-1508(800)X

AUGUSTA
NEW BELGRADE BRIDGE NB

TITLE SHEET

SHEET NUMBER
1
OF 23

Filename:\st\planset\001_Title_01.dgn Division: Structures Username: bmasse Date:4/19/2010

## GENERAL CONSTRUCTION NOTES

1. All utility facilities shall be adjusted by the respective utilities unless otherwise noted.

2. Protective Coating for Concrete Surfaces shall be applied to the following areas:

   All exposed surfaces of concrete curbs.
   Fascias down to the drip edge.
   All exposed surfaces of Concrete Transition Barriers.
   Concrete wearing surfaces.
   Concrete barrier railing.
   Top of abutment wingwalls and to one foot below the top of wingwalls on the back slope.

3. Erosion Control Mix may be substituted in those areas normally receiving loam and seed as directed by the Resident. Placement shall be in accordance with Standard Specification 619, Mulch. Payment will be made under Item 656.75.

4. Bidders and Contractors may obtain a copy of the existing bridge plans by faxing a Request for Information to the Bid Contact Person. The plans are reproductions of the original drawings as prepared for the construction of the bridge. It is very unlikely that the plans will show any construction field changes or any alterations, which may have been made to the bridge during its life span.

5. The bridge has not been surveyed and As-Built Plans are not available. The Contractor shall survey and take measurements to determine the existing bridge deck elevations, I-95 approach pavement elevations and cross-slope, and superstructure and substructure dimensions prior to the design of the Prefabricated Deck Panels. These plans were developed using the existing bridge plans. The intent of the approach paving is to transition the elevation of the new bridge deck to the existing approach pavement.

6. Bidders and Contractors may obtain a copy of the bridge deck evaluation report of the existing bridge by faxing a Request for Information to the Bid Contact Person. The report contains visual inspection information of the bridge. There is no assurance that the information or data is a true representation of the conditions of the entire deck.

7. Quantities included for pay items measured and paid for by Lump Sum are estimated quantities and are provided by MaineDOT for informational purposes only. Lump Sum pay items will be paid for at the Contract Bid amount, with no addition or reduction in payment to the Contractor if the actual final quantities are different from the MaineDOT provided estimated quantities, except as follows:

   a. If a Lump Sum pay item is eliminated, the requirements of Standard Specifications Section 109.2, Elimination of Items, will take precedence.

   b. If other Contract Documents specifically allow a change in payment for a Lump Sum pay item, those requirements will be followed.

   c. If a design change results in changes to estimated quantities for Lump Sum pay items, price adjustments will be made in accordance with Standard Specifications Section 109.7, Equitable Adjustments to Compensation.

8. Any damage to the slopes caused by the Contractor's equipment, personnel, or operation shall be repaired to the satisfaction of the Engineer. All work, equipment , and materials required to make repairs shall be at the Contractor's expense. Repair work, if necessary, shall not be done from a lane carrying traffic.

## SUPERSTRUCTURE NOTES

1. The Contractor shall submit a Bridge Demolition Plan for both construction phases to the Resident at least 10 business days prior to the start of demolition work. The plan shall outline the methods and equipment to be used to remove and dispose of all materials included in the existing bridge that are not incorporated in the final condition. No work related to the removal of the bridge shall be undertaken by the Contractor until MaineDOT has reviewed the Bridge Demolition Plan for appropriateness and completeness. Payment for all work necessary for developing, submitting and finalizing the Demolition Plan will be considered incidental to Item 202.10.

2. The steel portions of the existing bridge are coated with a lead-based paint system. At the bridge site, the Contractor is responsible for the containment, proper management and disposal of all hazardous and special wastes generated by processes. MaineDOT will assume generator responsibility for the hazardous and special wastes generated at the bridge site and will sign all manifests or bills of ladings used to transport this material. Transport and management of any special or hazardous wastes shall be performed by MaineDOT approved vendors. Further, at the bridge site, the Contractor is responsible for implementing appropriate OSHA-mandated personal protection standards related to these processes. The Contractor shall handle contaminated materials, in accordance with the Maine Department of Environmental Protection's "Maine Hazardous Waste Management Regulations", Chapter 850. A copy of this regulation is available at MaineDOT's offices on Child Street in Augusta. Payment for the work necessary to comply with this note shall be considered incidental to related Pay Items.

3. Selective cleaning and painting of the steel beams shall be completed. The areas to be painted are the entire beam for 6' at each end of each beam, the bottom flanges of all beams, the exterior faces of the fascia beams and other selected areas as determined by the Resident. The existing pier and abutment bearings shall be completely cleaned and painted. All costs for all cleaning and painting shall be included in the structural steel painting items.

## SUPERSTRUCTURE NOTES (CONT.)

4. The Paint on the existing bridge is Lead Based. The top flanges of the stringers are coated with lead paint. This paint will need to be removed in the immediate area where shear studs are to be welded, and in all other areas where the Contractor is required to work on the existing steel. The Contractor is responsible for removing this paint in accordance with all applicable regulations and special provisions. There will be no separate payment for this work. The cost shall be considered incidental to the work requiring the paint removal.

5. The integral concrete wearing surface shall be placed at the same time the Prefabricted Deck Panels are filled with cast-in-place concrete and shall be finished to an elevation 2 inches above the top of the precast concrete. No separate payment shall be made for this wearing surface, but all labor, equipment, and materials shall be considered incidental to Item 530.03, Prefabrictaed Deck Panels.

6. Removal of Existing Superstructure (Property of the Contractor) shall include pavement, all deck, curbs, bridge railing, existing shear connectors (studs or spirals), expansion joints.

7. Remove galvanizing in areas where field welding is required.

8. Areas where existing steel coating is compromised due to the Contractor's operations shall be cleaned and recoated in accordance with Section 506 of the special provisions. The cost of any required cleaning and coating application shall be considered incidental to the cost of the work being performed.

9. Form a one inch V-groove on the fascias at the horizontal joint between the curb and deck.

10. Reinforcing steel shall have a minimum concrete cover of 2 inches unless otherwise noted.

11. The existing Shear Connectors may be spirals or studs. The existing Shear Connectors shall be completely removed and new Shear Connectors shall be installed per the detail on Sheet 9. Shear connectors shall be installed after the placement of Prefabricated Deck Panels has been approved by the Resident.

12. A Protective Shield shall be installed beneath the portion of the deck to be removed before any removal begins.

13. Removing, Temporarily Relocating, and Reinstalling signs and lighting conduit as shown in the Plans will be considered incidental to Contract Items. Method of connection of signs and conduit to bridge shall be approved by the Resident.

14. During pier modification work and adjacent lane closure, the concrete barrier in front of the piers shall be removed and stored. After pier modification and repair, the concrete barrier shall be reset as directed by the Resident. Route 8/11/27 approach guard rail shall be reattached, and ditches behind piers shall be graded to drain. Cost shall be incidental to pier repair items.

15. Any damage to the existing approach slabs shall be repaired to the satisfaction of the Resident. All work, equipment, and materials required to make repairs shall be at the Contactor's expense.


Filename: ...\planset\002_Gnt_Notes_01.dgn Division: Structures Username: clclilley Date:4/26/2010


STATE OF MAINE
DEPARTMENT OF TRANSPORTATION

BR-1508(800)X

PIN 15088.00

BRIDGE NO. 5793 BRIDGE PLANS

| PROJ. MANAGER | T. BRYANT | BY | DATE |
|---|---|---|---|
| DESIGN-DETAILED | GME | CLC | 4-20-2010 |
| CHECKED-REVIEWED | SMG | TSB | 4-20-2010 |
| DESIGN2-DETAILED2 | --- | --- | --- |
| DESIGN3-DETAILED3 | --- | --- | --- |
| REVISIONS 1 | --- | --- | --- |
| REVISIONS 2 | --- | --- | --- |
| REVISIONS 3 | --- | --- | --- |
| REVISIONS 4 | --- | --- | --- |
| FIELD CHANGES | --- | --- | --- |

SIGNATURE

P.E. NUMBER

DATE

NEW BELGRADE BRIDGE NB
OVER ROUTE 8\11\27
AUGUSTA KENNEBEC COUNTY

CONSTRUCTION NOTES

SHEET NUMBER

2

OF 23

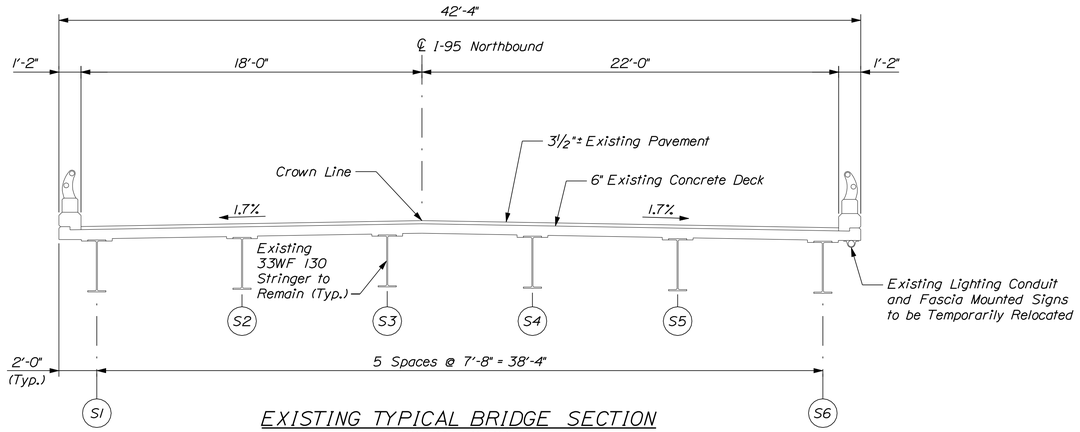


EXISTING TYPICAL BRIDGE SECTION

(Looking North)
Scale: 1/4" = 1'-0"

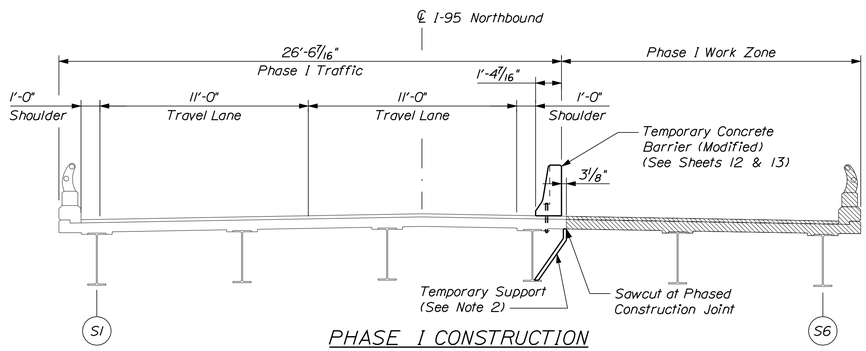


PHASE I CONSTRUCTION

(Looking North)
Scale: 1/4" = 1'-0"

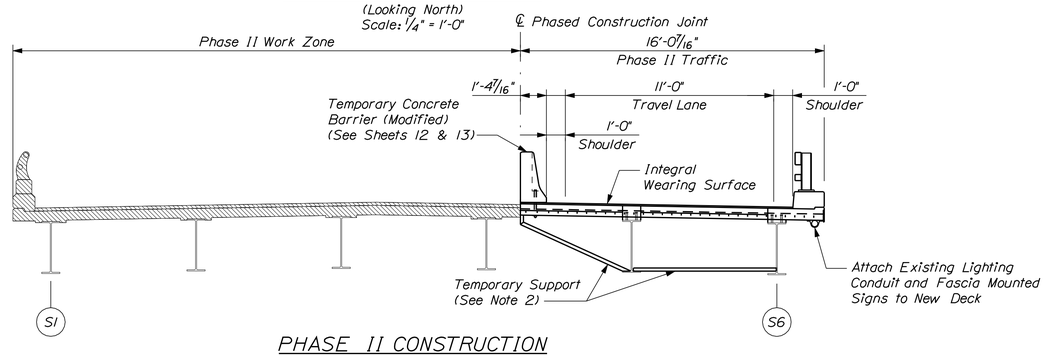


PHASE II CONSTRUCTION

(Looking North)
Scale: 1/4" = 1'-0"

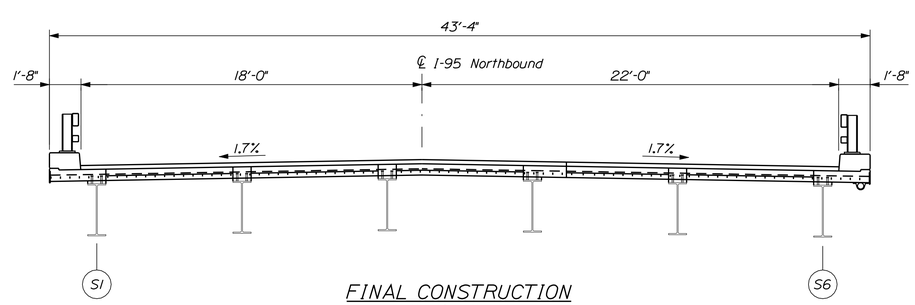


FINAL CONSTRUCTION

(Looking North)
Scale: 1/4" = 1'-0"

Note:

1. Proposed curbs are 6" wider than existing curbs. Existing and proposed deck curb to curb width is 40'-0". Widening is 6" on outside of each existing fascia line.

2. Temporary Support shown is conceptual only. Contractor shall design Temporary Support and submit design and calculations stamped by a Professional Engineer Licensed in the State of Maine for approval prior to construction. All costs for Temporary Support shall be incidental to Item 530.03.

Key:

Limits of Concrete Removal

STATE OF MAINE
DEPARTMENT OF TRANSPORTATION

BR-1508(800)X

PIN 15088.00

BRIDGE NO. 5793

BRIDGE PLANS

| PROJ. MANAGER | T. BRYANT | BY | DATE |
|---|---|---|---|
| DESIGN-DETAILED | GME | CLC | 4-20-2010 |
| CHECKED-REVIEWED | SMG | TSB | 4-20-2010 |
| DESIGN2-DETAILED2 | --- | --- | --- |
| DESIGN3-DETAILED3 | --- | --- | --- |
| REVISIONS 1 | --- | --- | --- |
| REVISIONS 2 | --- | --- | --- |
| REVISIONS 3 | --- | --- | --- |
| REVISIONS 4 | --- | --- | --- |
| FIELD CHANGES | --- | --- | --- |

SIGNATURE

P.E. NUMBER

DATE

NEW BELGRADE BRIDGE NB
OVER ROUTE 8\11\27
AUGUSTA KENNEBEC COUNTY

BRIDGE CONSTRUCTION PHASING

SHEET NUMBER

3

OF 23

Filename: ...\st\planset\003_ConPhase_01.dgn Division: Structures Username: clclilley Date:4/20/2010

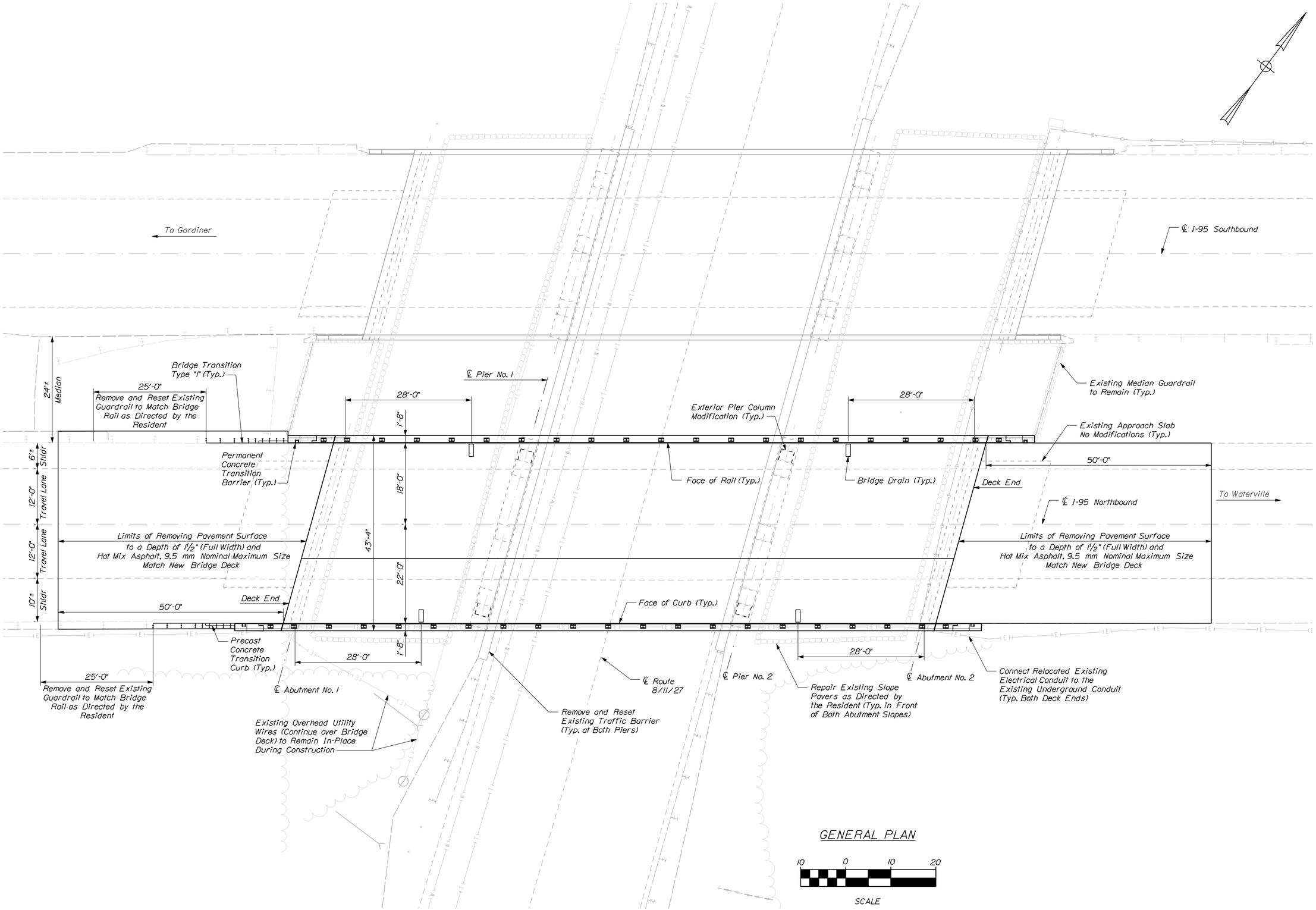


STATE OF MAINE
DEPARTMENT OF TRANSPORTATION

BR-1508(800)X

PIN 15088.00

BRIDGE NO. 5793

BRIDGE PLANS

| PROJ. MANAGER | T. BRYANT | BY | DATE |
|---|---|---|---|
| DESIGN-DETAILED | GME | CLC | 4-20-2010 |
| CHECKED-REVIEWED | SMG | TSB | 4-20-2010 |
| DESIGN2-DETAILED2 | ... | ... | ... |
| DESIGN3-DETAILED3 | ... | ... | ... |
| REVISIONS 1 | ... | ... | ... |
| REVISIONS 2 | ... | ... | ... |
| REVISIONS 3 | ... | ... | ... |
| REVISIONS 4 | ... | ... | ... |
| FIELD CHANGES | ... | ... | ... |

SIGNATURE

P.E. NUMBER

DATE

NEW BELGRADE BRIDGE NB
OVER ROUTE 8\11\27
AUGUSTA KENNEBEC COUNTY

GENERAL PLAN

SHEET NUMBER

4

OF 23

Filename: ...\planset\004_GeneralPlan_01.dgn Division: Structures Username: clcilley Date:4/20/2010

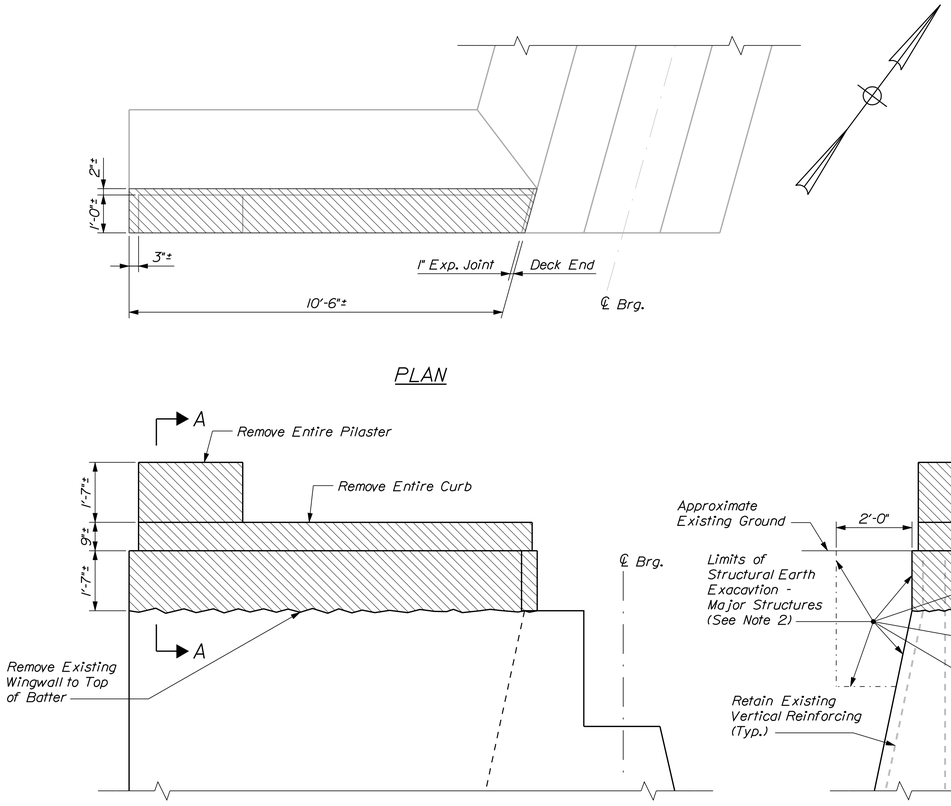


TYPICAL WINGWALL REMOVAL
(Southeast Shown. Typical all Four Wingwalls)
Scale: 1/2" = 1'-0"

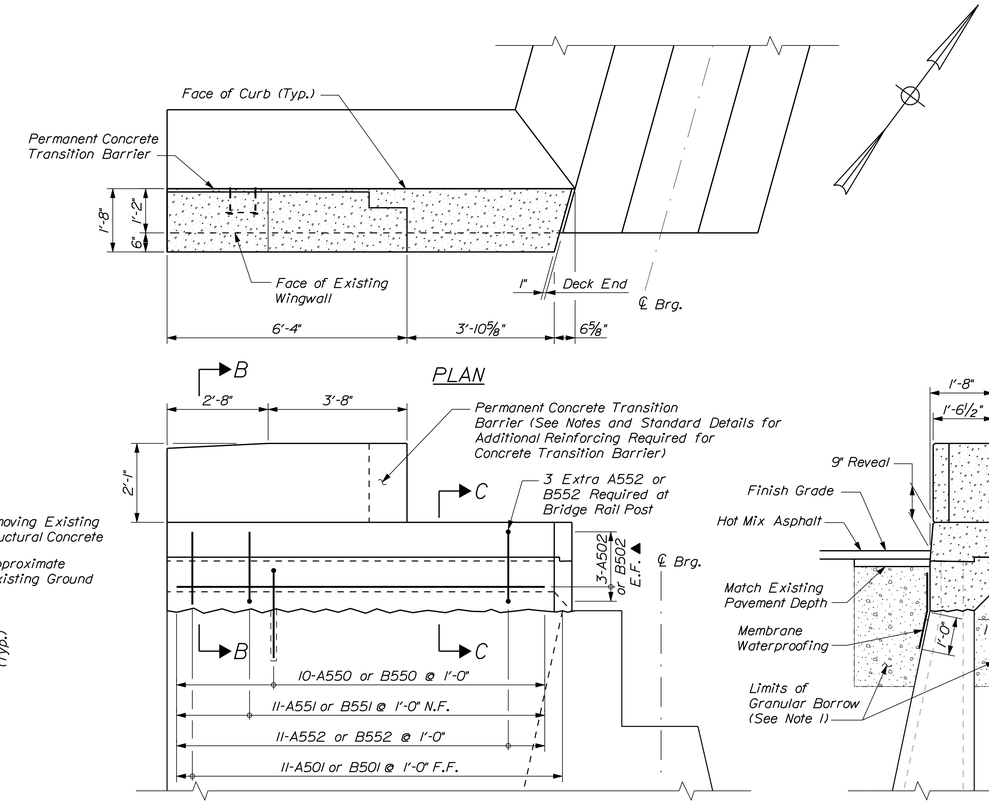


TYPICAL WINGWALL RECONSTRUCTION
(Southeast Shown. Typical all Four Wingwalls)
Scale: 1/2" = 1'-0"

Limits of Concrete Removal

Limits of New Concrete

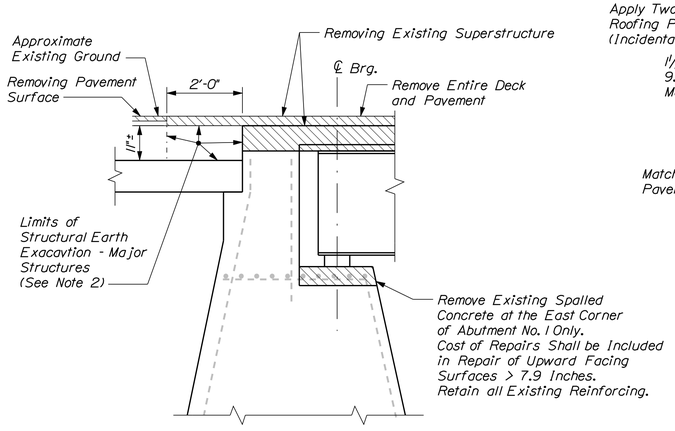


TYPICAL ABUTMENT REMOVAL
Scale: 1/2" = 1'-0"

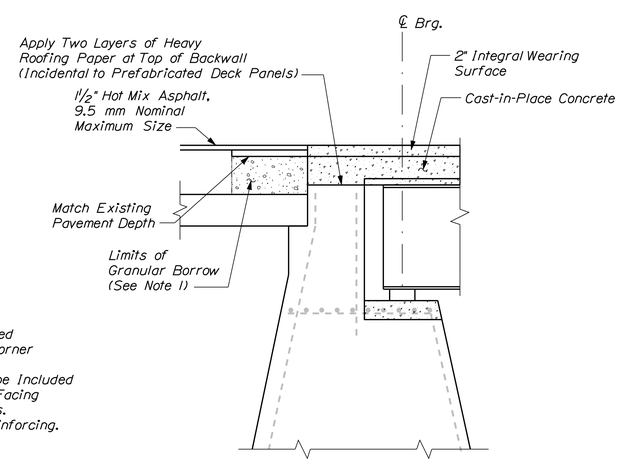


TYPICAL ABUTMENT RECONSTRUCTION
Scale: 1/2" = 1'-0"

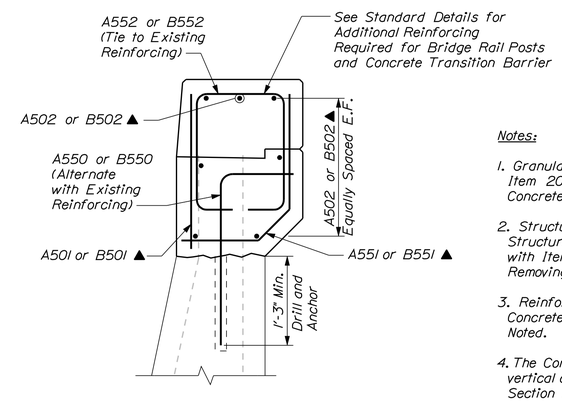


SECTION C-C
Scale: 1" = 1'-0"

Reinforcing Key:

F.F. = Far Face
N.F. = Near Face
E.F. = Each Face
▲ = Cut to Fit in Field

Notes:

1. Granular Borrow shall be in accordance with Item 203.25 and shall be incidental to Structural Concrete Curbs and Sidewalks.
2. Structural Earth Exacavtion - Major Structures, Plan Quantity shall be in accordance with Item 206.082 and shall be incidental to Removing Existing Structural Concrete.
3. Reinforcing Steel Shall Have a Minimum Concrete Cover of 3 Inches Unless Otherwise Noted.
4. The Contractor shall install Transition Barrier vertical closed stirrups, as shown in Standard Details Section 526 prior to the placement of the curb concrete.
5. Provide 3 additional stirrups in the curbs at each Transition Barrier location.

STATE OF MAINE
DEPARTMENT OF TRANSPORTATION

BR-1508(800)X

PIN 15088.00

BRIDGE NO. 5793

BRIDGE PLANS

| | BY | DATE |
|---|---|---|
| PROJ. MANAGER | T. BRYANT | |
| DESIGN-DETAILED | GME | CLC | 4-20-2010 |
| CHECKED-REVIEWED | SMG | TSB | 4-20-2010 |
| DESIGN2-DETAILED2 | --- | --- | --- |
| DESIGN3-DETAILED3 | --- | --- | --- |
| REVISIONS 1 | --- | --- | --- |
| REVISIONS 2 | --- | --- | --- |
| REVISIONS 3 | --- | --- | --- |
| REVISIONS 4 | --- | --- | --- |
| FIELD CHANGES | --- | --- | --- |

SIGNATURE

P.E. NUMBER

DATE

NEW BELGRADE BRIDGE NB
OVER ROUTE 8\11\27
AUGUSTA KENNEBEC COUNTY

ABUTMENT DETAILS

SHEET NUMBER

5

OF 23

Filename: ...\planset\005_Abutdetails_01.dgn Division: Structures Username: clcilley Date:4/20/2010

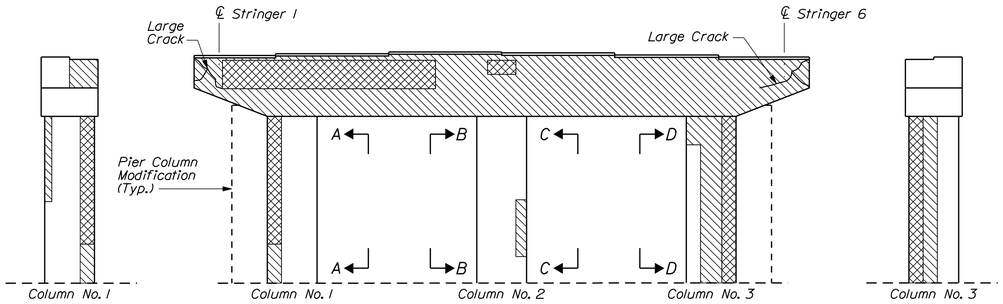


PIER NO. 1 WEST FACE
Scale: 3/16" = 1'-0"

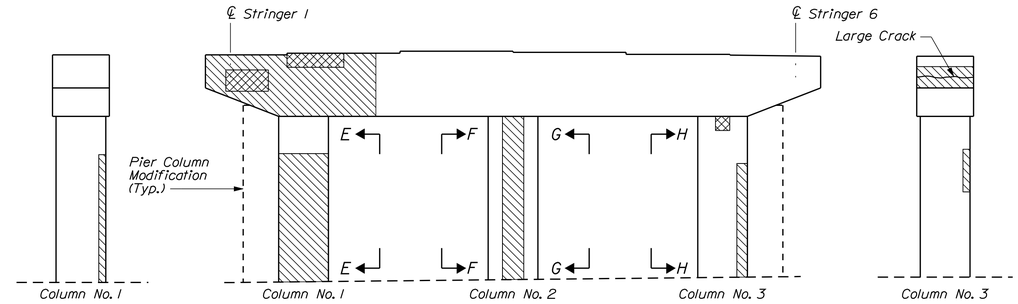


PIER NO. 2 WEST FACE
Scale: 3/16" = 1'-0"

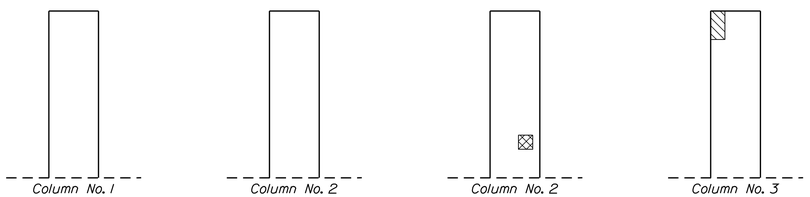


VIEW A-A
Scale: 3/16" = 1'-0"

VIEW B-B
Scale: 3/16" = 1'-0"

VIEW C-C
Scale: 3/16" = 1'-0"

VIEW D-D
Scale: 3/16" = 1'-0"

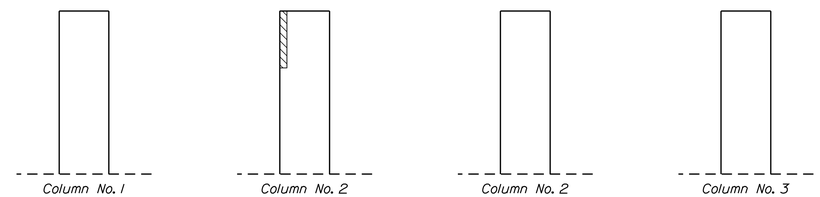


VIEW E-E
Scale: 3/16" = 1'-0"

VIEW F-F
Scale: 3/16" = 1'-0"

VIEW G-G
Scale: 3/16" = 1'-0"

VIEW H-H
Scale: 3/16" = 1'-0"

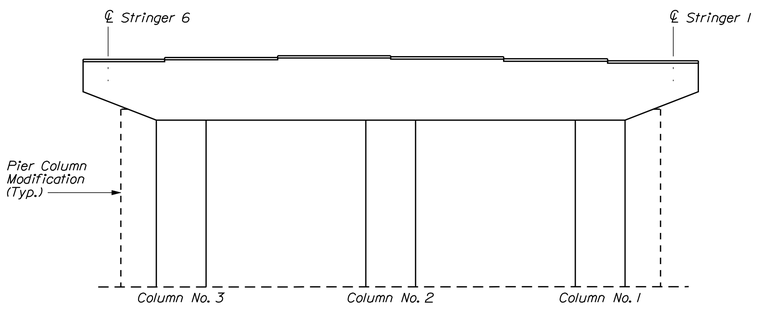


PIER NO. 1 EAST FACE
Scale: 3/16" = 1'-0"

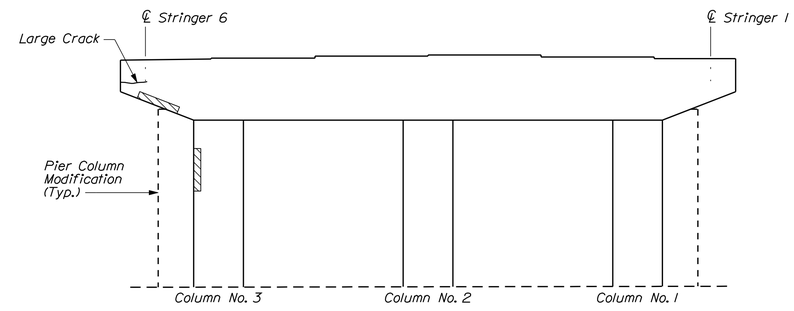


PIER NO. 2 EAST FACE
Scale: 3/16" = 1'-0"

Delamination

Spall

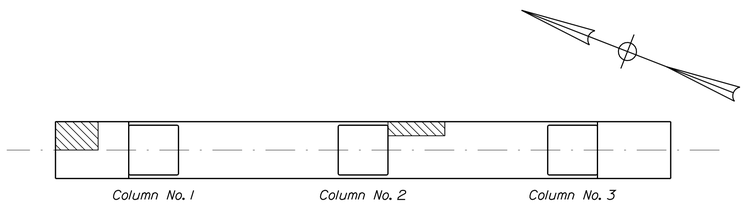


PIER NO. 1 BOTTOM OF PIER CAP
Scale: 3/16" = 1'-0"

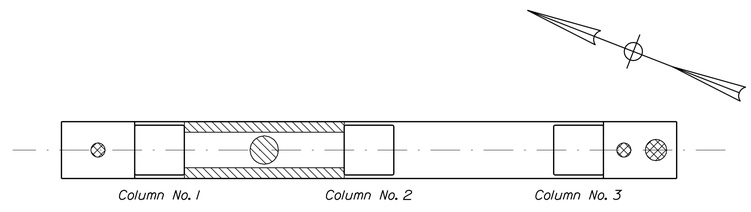


PIER NO. 2 BOTTOM OF PIER CAP
Scale: 3/16" = 1'-0"

Notes:

1. A thorough inspection by the Resident will be made of all substructure areas at the time of construction, and those areas found to have spalled, delaminated or otherwise unsound concrete will be repaired. The Contractor shall supply any staging and ladders required for this inspection. The cost shall be incidental to Item 518.52, Item 518.60, Item 518.61 and Item 518.70.
2. The "Pier Repair Details" sheet was developed from notes of a June 2009 preliminary inspection, and shall be used only as an indication of the condition of the substructure at that time.
3. The material used to fill a patch shall be formed so that the final surface will have the same score marks and exterior face appearance as the original surfaces being repaired.
4. All concrete repair work shall completely protect the bridge bearings and stringers from rebound material during concrete demolition and application procedures.
5. Prior to starting repairs on the north end of Pier No. 1, Temporary Structural Supports for the north exterior stringers shall be erected. Temporary Structural Supports shall be designed and stamped by a Maine Registered Professional Engineer and shall be submitted for review 14 days prior to use.

STATE OF MAINE
DEPARTMENT OF TRANSPORTATION

BR-1508(800)X

PIN 15088.00

BRIDGE NO. 5793

BRIDGE PLANS

| | | | | |
|---|---|---|---|---|
| PROJ. MANAGER | T. BRYANT | | | |
| DESIGN-DETAILED | GME | CLC | 4-20-2010 | SIGNATURE |
| CHECKED-REVIEWED | SMG | TSB | 4-20-2010 | |
| DESIGN2-DETAILED2 | --- | --- | --- | P.E. NUMBER |
| DESIGN3-DETAILED3 | --- | --- | --- | |
| REVISIONS 1 | --- | --- | --- | |
| REVISIONS 2 | --- | --- | --- | DATE |
| REVISIONS 3 | --- | --- | --- | |
| REVISIONS 4 | --- | --- | --- | |
| FIELD CHANGES | --- | --- | --- | |

NEW BELGRADE BRIDGE NB
OVER ROUTE 8\11\27
AUGUSTA KENNEBEC COUNTY

PIER REPAIR DETAILS

SHEET NUMBER
6
OF 23

Filename: ...\planset\006_PierRepair_01.dgn Division: Structures Username: clcilley Date:4/20/2010

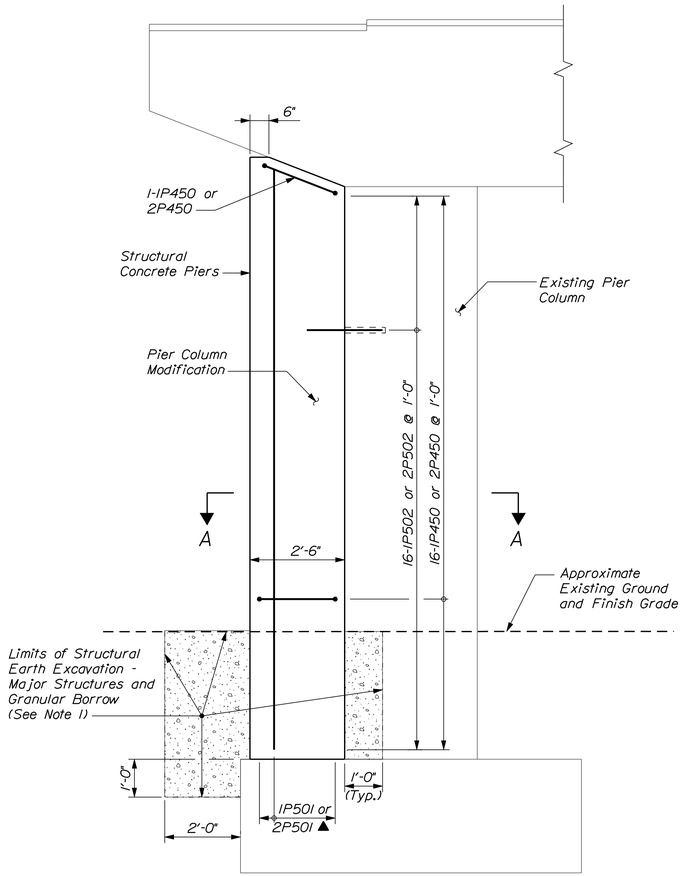


ELEVATION

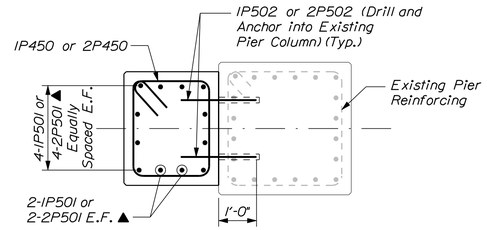


SECTION A-A

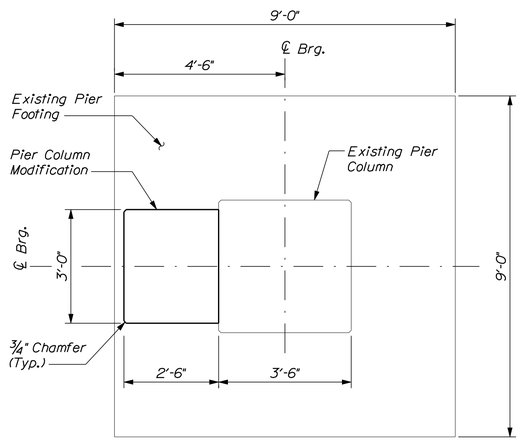


PLAN
(Pier Cap Not Shown)

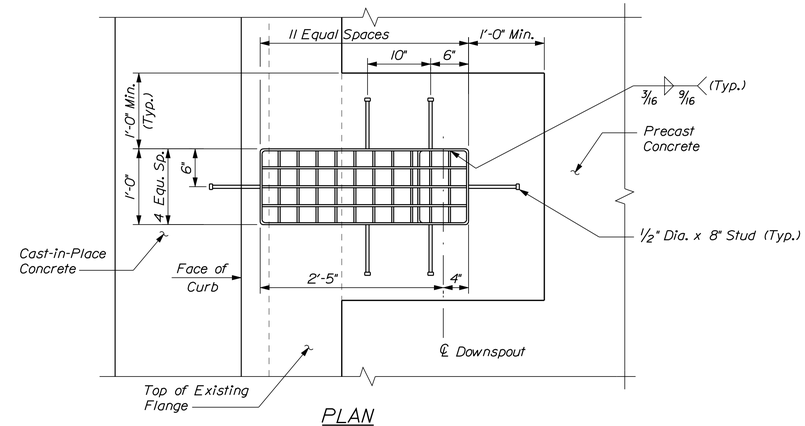


PLAN

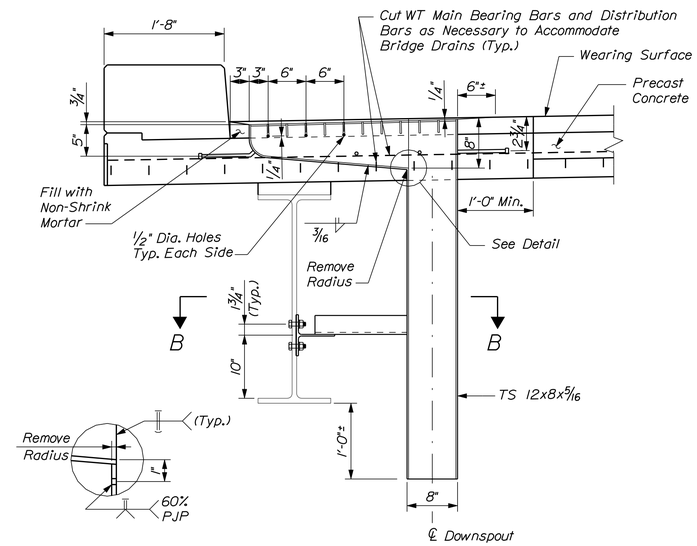


SECTION
(Additional reinforcing and supports to construct bridge drains not shown)

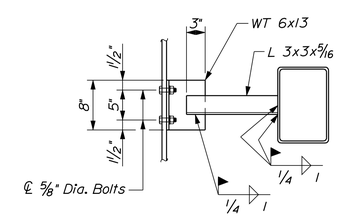


SECTION B-B

BRIDGE DRAIN DETAILS
Scale: 1" = 1'-0"

TYPICAL PIER EXTERIOR COLUMN MODIFICATION
(Modification to Occur at all Fascia Columns, 4 Locations Total)
Scale: 1/2" = 1'-0"

Pier Notes:

1. Granular Borrow and Structural Earth Excavation - Major Structures, Plan Quantity shall be in accordance with Item 203.25 and Item 206.082, respectively and shall be incidental to Item 502.23.
2. Pier reinforcing steel shall have a minimum concrete cover of 3 inches unless otherwise noted.

Reinforcing Key:

F.F. = Far Face
N.F. = Near Face
E.F. = Each Face
▲ = Cut to Fit in Field

Bridge Drain Notes:

1. The cost of fabrication, delivery, and installation of each bridge drain, including touch up shall be considered incidental to Prefabricated Deck Panels.
2. Materials shall conform to Subsection 711.04 of the Standard Specifications.
3. Grating shall be a commercial heavy-duty grating with 1 1/2" x 5/16" bearing bars and 3/8" Dia. cross bars.
4. Bolted connections shall be made using A325 7/8" Dia. bolts. Holes required in existing members shall be drilled to 15/16" Dia.
5. The exact location of the drains may be varied slightly to accommodate the spacing of the main bearing bars in the decking grid.
6. Remove galvanizing as necessary prior to field welding the permanent grate.
7. Coat all field welds with an approved zinc-rich paint after welding.

STATE OF MAINE
DEPARTMENT OF TRANSPORTATION

BR-1508(800)X

PIN 15088.00

BRIDGE NO. 5793

BRIDGE PLANS

| PROJ. MANAGER | T. BRYANT | BY | DATE |
|---|---|---|---|
| DESIGN-DETAILED | GME | CLC | 4-20-2010 |
| CHECKED-REVIEWED | SMG | TSB | 4-20-2010 |
| DESIGN2-DETAILED2 | --- | --- | --- |
| DESIGN3-DETAILED3 | --- | --- | --- |
| REVISIONS 1 | --- | --- | --- |
| REVISIONS 2 | --- | --- | --- |
| REVISIONS 3 | --- | --- | --- |
| REVISIONS 4 | --- | --- | --- |
| FIELD CHANGES | --- | --- | --- |

SIGNATURE

P.E. NUMBER

DATE

NEW BELGRADE BRIDGE NB
OVER ROUTE 8\11\27
AUGUSTA KENNEBEC COUNTY

PIER DETAILS AND
BRIDGE DRAIN DETAILS

SHEET NUMBER
7
OF 23

Filename: ...\planset\007_Pierdetails_02.dgn Division: Structures Username: clcilley Date:4/20/2010

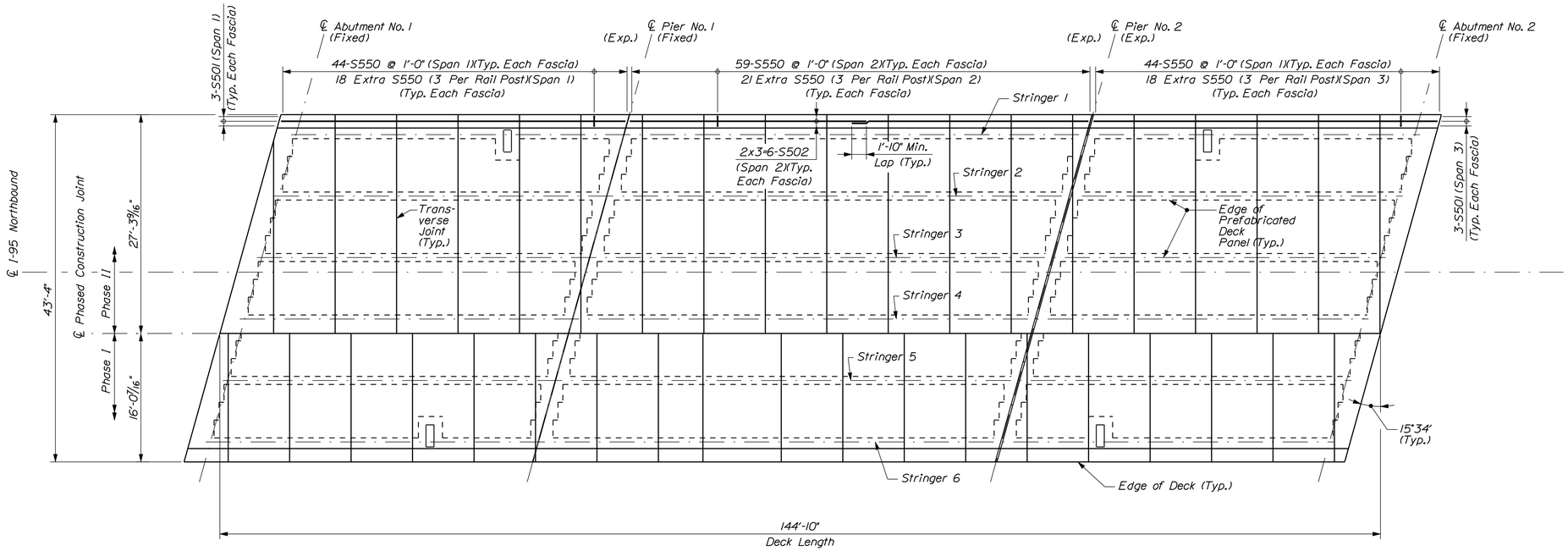


## DECK PLAN

(Reinforcing Not Shown)
Scale: 1/8" = 1'-0"

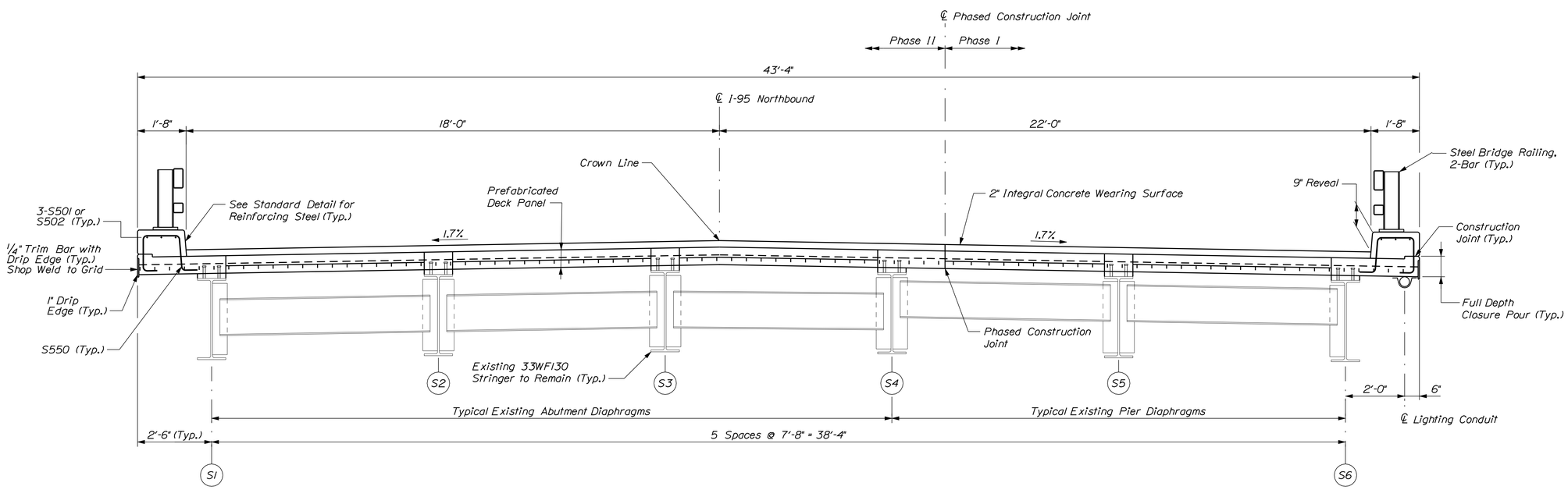


## PROPOSED TYPICAL BRIDGE SECTION

(Looking North)
Scale: 1/2" = 1'-0"

Note:

1. See sheet 9 for notes.

STATE OF MAINE
DEPARTMENT OF TRANSPORTATION

BR-1508(800)X

PIN 15088.00

BRIDGE NO. 5793

BRIDGE PLANS

| PROJ. MANAGER | T. BRYANT | BY | DATE |
|---|---|---|---|
| DESIGN-DETAILED | GME | CLC | 4-20-2010 |
| CHECKED-REVIEWED | SMG | TSB | 4-20-2010 |
| DESIGN2-DETAILED2 | --- | --- | --- |
| DESIGN3-DETAILED3 | --- | --- | --- |
| REVISIONS 1 | --- | --- | --- |
| REVISIONS 2 | --- | --- | --- |
| REVISIONS 3 | --- | --- | --- |
| REVISIONS 4 | --- | --- | --- |
| FIELD CHANGES | --- | --- | --- |

SIGNATURE

P.E. NUMBER

DATE

NEW BELGRADE BRIDGE NB
OVER ROUTE 8\11\27
AUGUSTA KENNEBEC COUNTY

DECK PLAN LAYOUT

SHEET NUMBER

8

OF 23

Filename: ...\st\planset\008_DeckPln_01.dgn Division: Structures Username: clcilley Date:4/20/2010

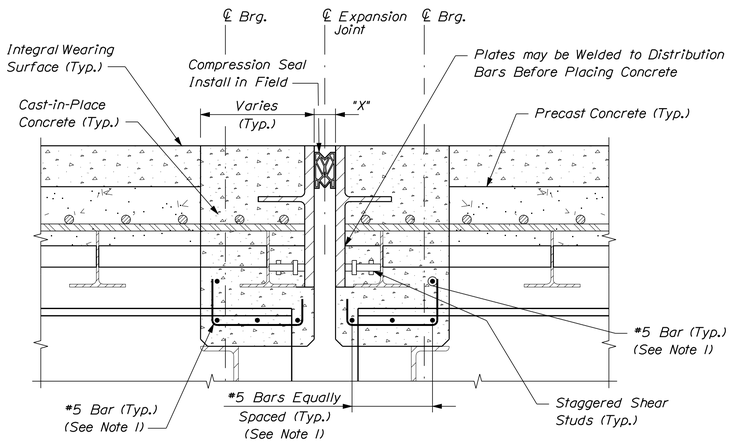


TYPICAL EXPANSION JOINT
(Compression Seal per MaineDOT Standard Details)
Not to Scale

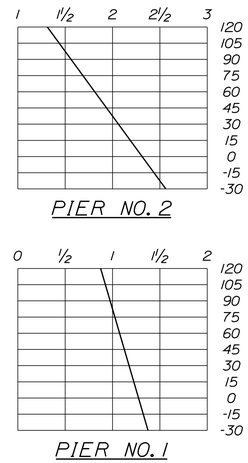


COMPRESSION SEAL ADJUSTMENT CHART

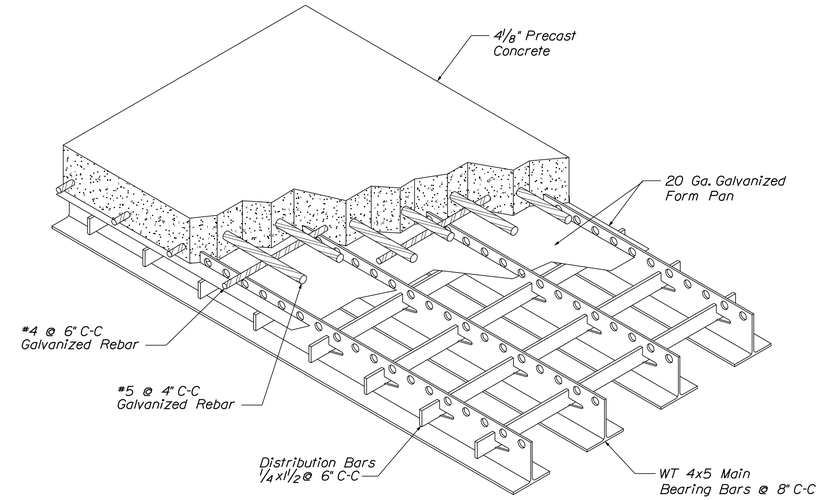


PREFABRICATED DECK PANEL
(Exodermic Bridge Deck)
(See Note 1)
Not to Scale

Cast-in-Place Concrete
Precast Concrete Areas

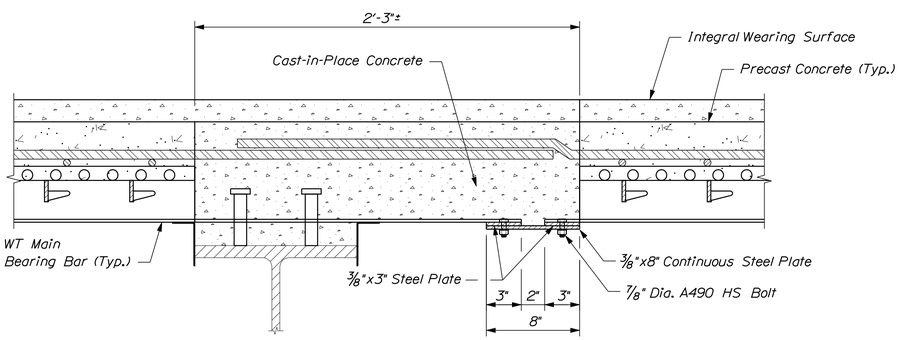


LONGITUDINAL JOINT
Not to Scale

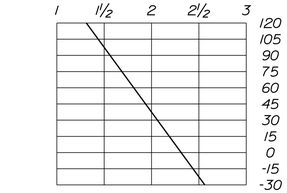


CROWN DETAIL
Not to Scale

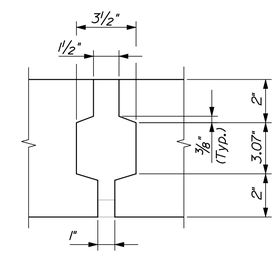


SHEAR KEY DETAIL
Not to Scale

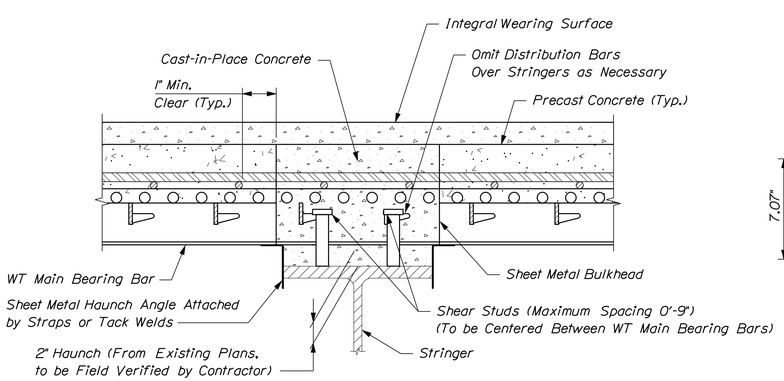


SECTION
(Connection to Stringer) (Leveling Bolts Not Shown)
Not to Scale

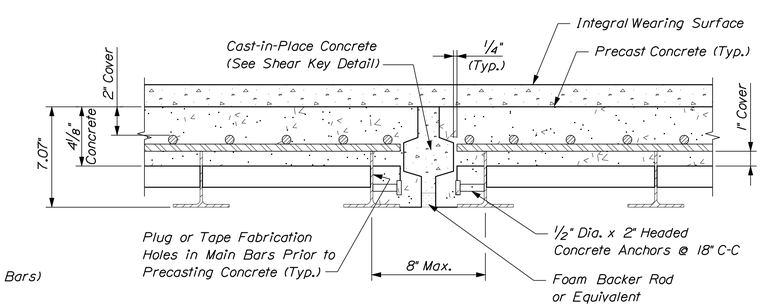


TRANSVERSE JOINT
Not to Scale

Notes:

1. The details presented in these drawings pertaining to precast exodermic deck panels are conceptual only and are to be used as a guide in developing working drawings for the exodermic computations signed and sealed by a Licensed Professional Engineer in the state of Maine in sufficient detail, for review by the Resident.
2. Form work computations for cast-in-place concrete shall be performed by a Maine Licensed Professional engineer and submitted to the Resident for review.
3. Prefabricated Deck Panels bid price shall include the cost of all labor, materials, and equipment necessary to complete the design work, the furnishing and installation of all deck panels, which also includes the cost of transporting, storing, and any protection from damage to the deck panels.
4. WT main bar overhangs at end of deck shall be fully supported until cast-in-place closure pours have cured to avoid twisting, bending, or distortion of the precast panel components.
5. Lifting details shall be included in the fabrication drawings for review by the Resident.
6. Reinforcing steel required for the closure pours shall be included in Item 530.03, Prefabricated Deck Panels.
7. Item 530.03, Prefabricated Deck Panels shall include the area of precast deck panels and the areas of cast-in-place concrete including integral wearing surface. Cast-in-place concrete shall have ⅜" maximum aggregate size.
8. Contractor shall provide shear studs in the haunch of the precast deck system at a minimum of 3" below top of precast deck and a minimum of 2" above bottom of WT 4x5 main bearing bars.
9. The seals to be furnished shall have a minimum movement rating of:
   Pier No. 1 = 0.500 inches
   Pier No. 2 = 1.250 inches
10. The Resident shall approve the seals prior to fabrication of the expansion device.

STATE OF MAINE
DEPARTMENT OF TRANSPORTATION

BR-1508(800)X

PIN 15088.00

BRIDGE NO. 5793

BRIDGE PLANS

| PROJ. MANAGER | T. BRYANT | BY | DATE |
|---|---|---|---|
| DESIGN-DETAILED | GME | CLC | 4-20-2010 |
| CHECKED-REVIEWED | SMG | TSB | 4-20-2010 |
| DESIGN2-DETAILED2 | --- | --- | --- |
| DESIGN3-DETAILED3 | --- | --- | --- |
| REVISIONS 1 | --- | --- | --- |
| REVISIONS 2 | --- | --- | --- |
| REVISIONS 3 | --- | --- | --- |
| REVISIONS 4 | --- | --- | --- |
| FIELD CHANGES | --- | --- | --- |

SIGNATURE

P.E. NUMBER

DATE

NEW BELGRADE BRIDGE NB
OVER ROUTE 8\11\27
AUGUSTA KENNEBEC COUNTY

DECK DETAILS

SHEET NUMBER
9
OF 23

Filename: ...\st\planset\009_DeckDet_01.dgn Division: Structures Username: clcilley Date:4/20/2010

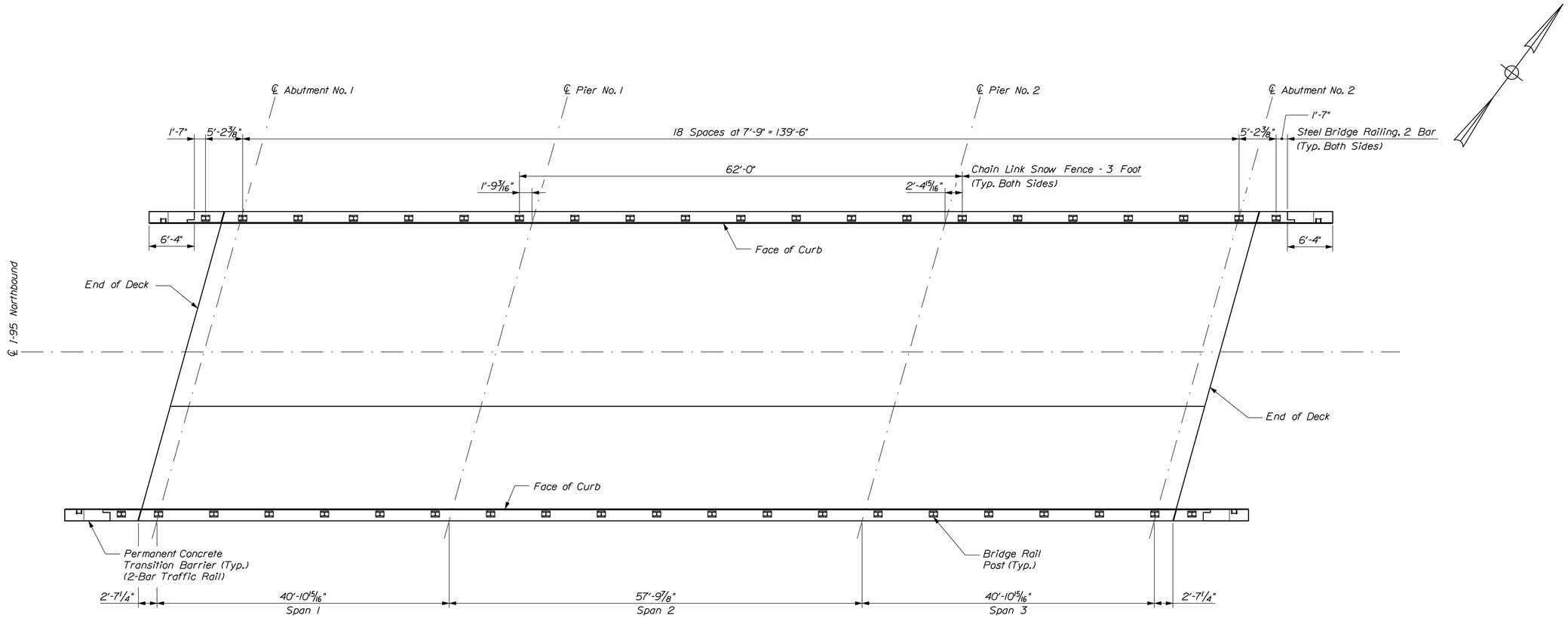


RAIL LAYOUT

Scale: 1/8" = 1'-0"

STATE OF MAINE
DEPARTMENT OF TRANSPORTATION

BR-1508(800)X

PIN 15088.00

BRIDGE NO. 5793

BRIDGE PLANS

| PROJ. MANAGER | T. BRYANT | BY | DATE |
|---|---|---|---|
| DESIGN-DETAILED | GME | CLC | 4-20-2010 |
| CHECKED-REVIEWED | SMG | TSB | 4-20-2010 |
| DESIGN2-DETAILED2 | --- | --- | --- |
| DESIGN3-DETAILED3 | --- | --- | --- |
| REVISIONS 1 | --- | --- | --- |
| REVISIONS 2 | --- | --- | --- |
| REVISIONS 3 | --- | --- | --- |
| REVISIONS 4 | --- | --- | --- |
| FIELD CHANGES | --- | --- | --- |

SIGNATURE

P.E. NUMBER

DATE

NEW BELGRADE BRIDGE NB
OVER ROUTE 8\11\27
AUGUSTA KENNEBEC COUNTY

RAIL LAYOUT

SHEET NUMBER

10

OF 23

Filename: ...\cad\st\planset\010_Rail_01.dgn Division: Structures Username: clclley Date:4/20/2010

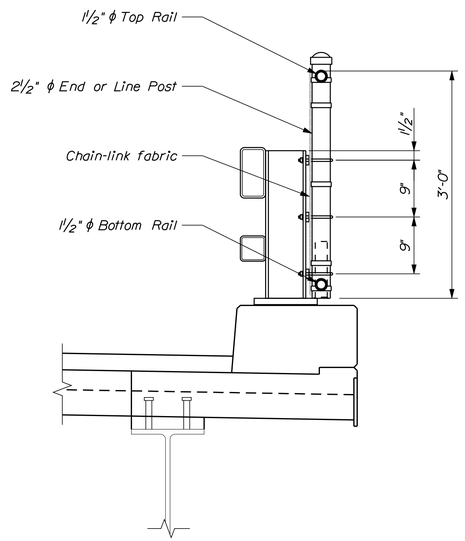


TRAFFIC RAIL SECTION

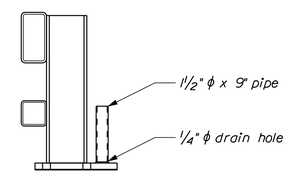


MODIFIED RAIL POST SECTION

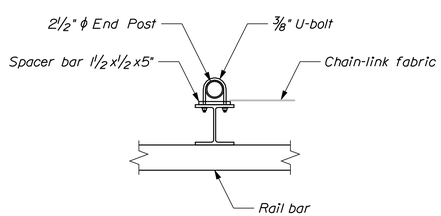


END POST DETAIL

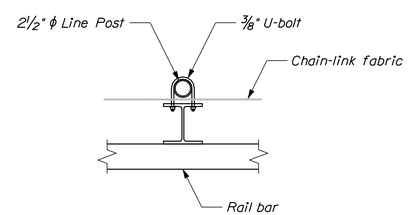


LINE POST DETAIL

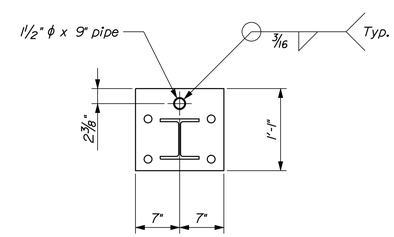


MODIFIED BASE PLATE PLAN

## SNOW FENCE NOTES

1. For the limits of snow fence installation, refer to "Rail Layout" sheet.
2. Payment for modified post base plates will be considered incidental to related contract items.
3. Rail splices shall be provided at bridge deck expansion joints and bridge rail splices.

STATE OF MAINE
DEPARTMENT OF TRANSPORTATION

BR-1508(800)X

PIN 15088.00

BRIDGE NO. 5793

BRIDGE PLANS

| | | | | |
|---|---|---|---|---|
| PROJ. MANAGER | T. BRYANT | BY | DATE | |
| DESIGN-DETAILED | GME | CLC | 4-20-2010 | |
| CHECKED-REVIEWED | SMG | TSB | 4-20-2010 | SIGNATURE |
| DESIGN2-DETAILED2 | --- | --- | --- | |
| DESIGN3-DETAILED3 | --- | --- | --- | P.E. NUMBER |
| REVISIONS 1 | --- | --- | --- | |
| REVISIONS 2 | --- | --- | --- | |
| REVISIONS 3 | --- | --- | --- | DATE |
| REVISIONS 4 | --- | --- | --- | |
| FIELD CHANGES | --- | --- | --- | |

NEW BELGRADE BRIDGE NB
OVER ROUTE 8\11\27
AUGUSTA KENNEBEC COUNTY

CHAIN LINK SNOW FENCE

SHEET NUMBER
11
OF 23

Filename: ...\st\planset\011_Snowscrn.dgn Division: Structures Username: clcilley Date:4/20/2010

MB-10A

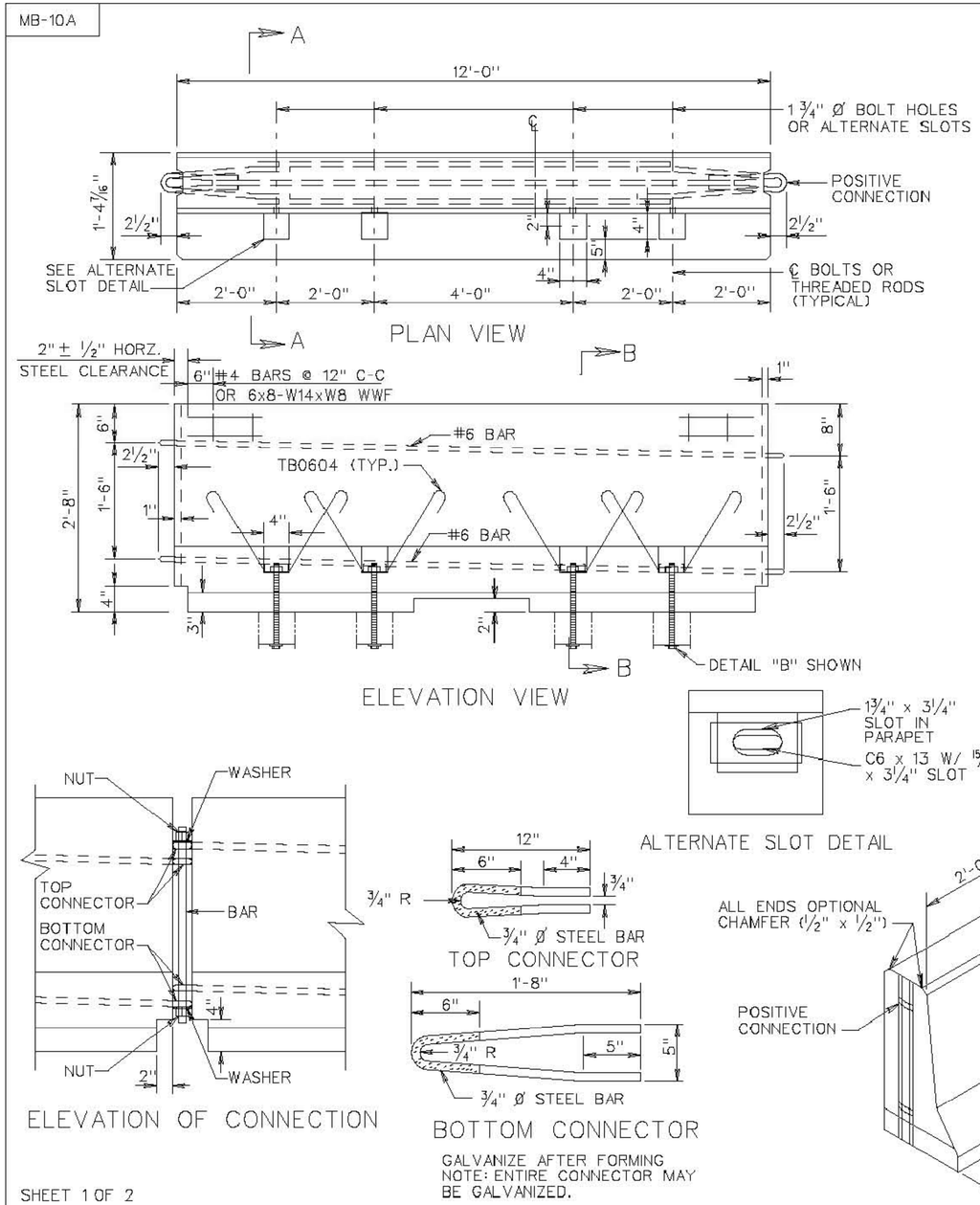


## REINFORCING STEEL SCHEDULE

FOR ONE (1) SECTION

| MARK | No. | SIZE | LENGTH | PIN Ø | LOCATION |
|---|---|---|---|---|---|
| TB0401 | 8 | 4 | 11'-5" | —— | TEMP. PARAPET |
| TB0502 | 12 | 5 | 4'-3" | 2 1/2" | " |
| TB0503 | 12 | 5 | 2'-8" | 2 1/2" | " |
| TB0604 | 8 | 6 | 4'-8" | 4 1/2" | " |

## BENDING DIAGRAM

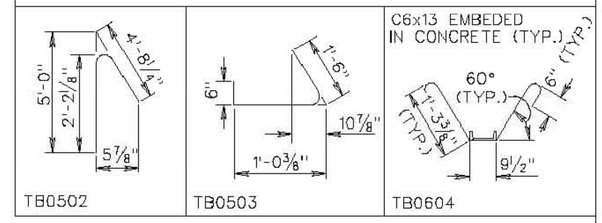


DIMENSIONS IN BENDING DIAGRAMS ARE OUT-TO-OUT OF BARS, EXCEPT AS SHOWN.
POUNDS OF REINFORCING STEEL = 202
REINFORCING SHEDULE BASED ON 12'-0" UNIT LENGTH.

*WHEN USING VDOT STANDARD MB-7D PC WITH THE PIN AND LOOP POSITIVE CONNECTION, ALLOW FOR 6'-0" DYNAMIC DEFLECTION. PROVIDE MIN. 60'-0" OF BARRIER UPSTREAM AND DOWNSTREAM OF WORK ZONE FOR ANCHORAGE. FOR APPROVED NON-VDOT DESIGNS, REFER TO MANUFACTURER'S INSTALLATION INSTRUCTIONS FOR DEFLECTIONS AND ANCHORAGE.*

SHEET 1 OF 2

REV. 7/02

501.51

# TRAFFIC BARRIER SERVICE CONCRETE PARAPET (SINGLE FACE) (FOR TEMPORARY INSTALLATION ON BRIDGE DECK EXTERIOR)

VIRGINIA DEPARTMENT OF TRANSPORTATION

SPECIFICATION REFERENCE

105
502

*TEMPORARY CONCRETE BARRIER TYPE I (MOD.)*

STATE OF MAINE
DEPARTMENT OF TRANSPORTATION

BR-1508(800)X

PIN 15088.00

BRIDGE NO. 5793

BRIDGE PLANS

| | | | |
|---|---|---|---|
| PROJ. MANAGER | T. BRYANT | BY | DATE |
| DESIGN-DETAILED | GME | CLC | 4-20-2010 |
| CHECKED-REVIEWED | SMG | TSB | 4-20-2010 |
| DESIGN2-DETAILED2 | --- | --- | --- |
| DESIGN3-DETAILED3 | --- | --- | --- |
| REVISIONS 1 | --- | --- | --- |
| REVISIONS 2 | --- | --- | --- |
| REVISIONS 3 | --- | --- | --- |
| REVISIONS 4 | --- | --- | --- |
| FIELD CHANGES | --- | --- | --- |

SIGNATURE

P.E. NUMBER

DATE

NEW BELGRADE BRIDGE NB
OVER ROUTE 8\11\27
AUGUSTA KENNEBEC COUNTY

TEMPORARY CONCRETE BARRIER (1 OF 2)

SHEET NUMBER

12

OF 23

Filename: ...\planset\012_ConcBarrier_01.dgn Division: Structures Username: clcilley Date:4/20/2010

MB-10A

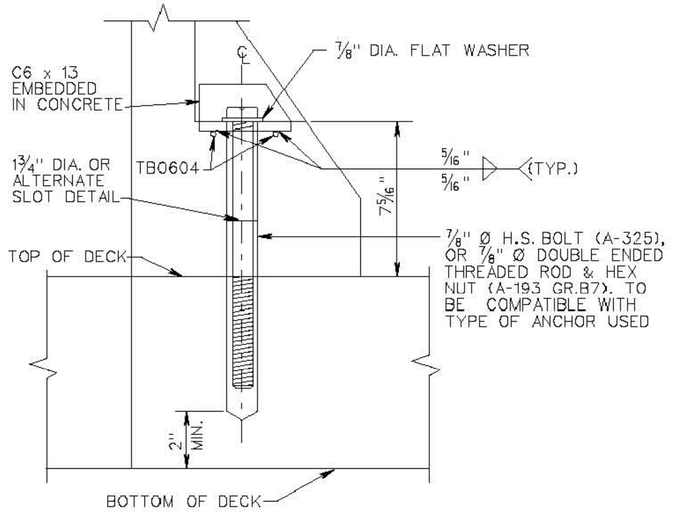


DETAIL "A"

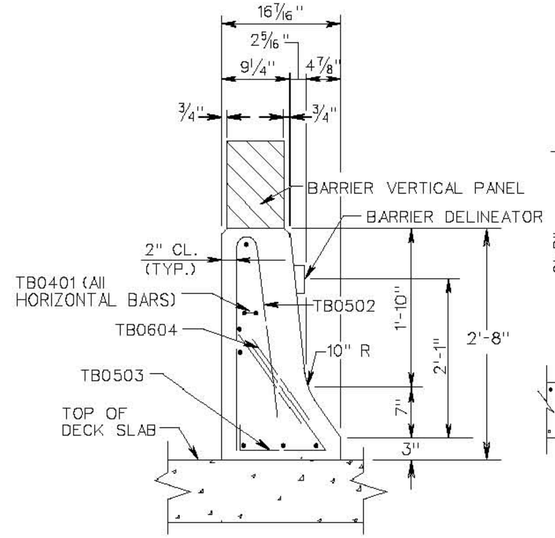


SECTION A-A

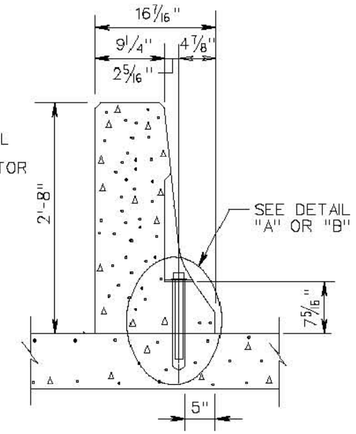


SECTION B-B
(ANCHOR BOLT)
BOLT DOWN SIDE ADJACENT TO TRAFFIC

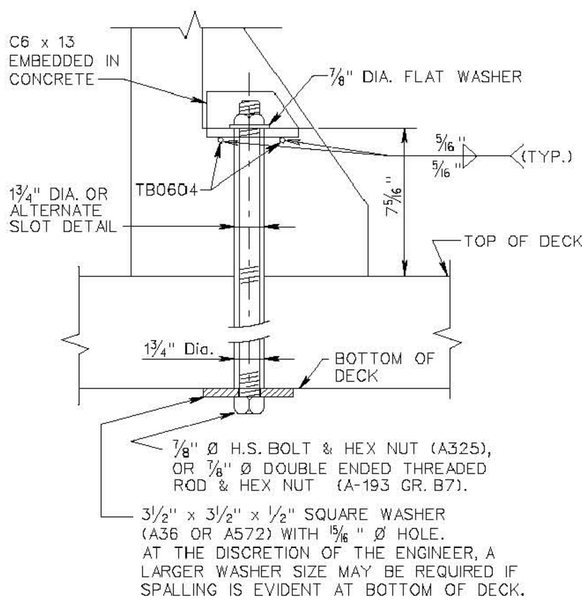


DETAIL "B"

## NOTES:

1. ~~BARRIER DELINEATOR TO BE SPACED IN ACCORDANCE WITH SECTION 702, OF THE ROAD AND BRIDGE SPECIFICATIONS AND THE BARRIER VERTICAL PANELS TO BE SPACED IN ACCORDANCE WITH VIRGINIA WORK AREA PROTECTION MANUAL. REFLECTIVE SURFACE, IN ALL INSTANCES, TO BE FACING ONCOMING TRAFFIC.~~
2. CONCRETE 4000 PSI (MIN.). REINFORCING STEEL GRADE 60.
3. AFTER REMOVING TEMPORARY BARRIER, CUT 7/8" Ø BOLT OR THREADED ROD AS LOW AS PRACTICAL BELOW ROADWAY SURFACE AND FILL RECESS WITH EPOXY BONDING COMPOUND EP-4 (DETAIL "A") OR REMOVE 7/8" Ø BOLTS OR THREADED RODS AND FILL HOLES WITH GROUT BONDED WITH EPOXY BONDING COMPOUND EP-4 (DETAIL "B").
4. ANCHOR SYSTEM SHOWN IN DETAIL "A" SHALL BE TESTED TO PROVIDE A MINIMUM PULLOUT OF 32,000 LBS. AND INSTALLED ACCORDING TO MANUFACTURER'S RECOMMENDATIONS.
5. COST OF BARRIER DELINEATOR AND BARRIER VERTICAL PANELS TO BE INCLUDED IN PRICE BID PER LINEAR FOOT OF BARRIER SERVICE.
6. WHEN BARRIER IS LOCATED ON VERTICAL AND/OR HORIZONTAL CURVES, THE OPENING AT THE JOINT IS NOT TO EXCEED 1".
7. DESIGN FEATURES RELATING TO CONSTRUCTION OR TO REGULATION AND CONTROL OF TRAFFIC MAY BE SUBJECT TO CHANGE AS DEEMED NECESSARY BY THE DEPARTMENT.
8. ~~FOR POSITIVE CONNECTION DETAILS AND DIMENSIONS SEE STANDARD SHEETS 501.59 - 501.61.~~

*NOTES (CONT.):*

*9. PIN AND CONNECTORS ARE TO BE ASTM A-36 REINFORCING. STEEL BARS ARE TO BE ASTM A 615. GRADE 60. ONE CONNECTOR PIN ASSEMBLY WITH EACH BARRIER SECTION.*

*10. THE CONNECTION PIN, NUTS AND WASHERS SHALL BE GALVANIZED IN ACCORDANCE WITH AASHTO M-111.*

*11. BEGINNING WITH THE JANUARY 2000 ADVERTISEMENT, ALL POSITIVE CONNECTIONS MUST BE APPROVED BY THE FHWA IN ACCORDANCE WITH NCHRP 350 TEST REQUIREMENTS.*

*12. ONE BARRIER DELINEATOR SHALL BE INSTALLED PER BARRIER SEGMENT.*

SHEET 2 OF 2

| SPECIFICATION REFERENCE | TRAFFIC BARRIER SERVICE CONCRETE PARAPET (SINGLE FACE) (FOR TEMPORARY INSTALLATION ON BRIDGE DECK EXTERIOR) VIRGINIA DEPARTMENT OF TRANSPORTATION | REV. 7/02 501.52 |
|---|---|---|

*TEMPORARY CONCRETE BARRIER TYPE I (MOD.)*

STATE OF MAINE
DEPARTMENT OF TRANSPORTATION

BR-1508(800)X

PIN 15088.00

BRIDGE NO. 5793

BRIDGE PLANS

| | BY | DATE |
|---|---|---|
| PROJ. MANAGER | T. BRYANT | |
| DESIGN-DETAILED | CLC | 4-20-2010 |
| CHECKED-REVIEWED | SMG | 4-20-2010 |
| DESIGN2-DETAILED2 | ... | ... |
| DESIGN3-DETAILED3 | ... | ... |
| REVISIONS 1 | ... | ... |
| REVISIONS 2 | ... | ... |
| REVISIONS 3 | ... | ... |
| REVISIONS 4 | ... | ... |
| FIELD CHANGES | ... | ... |

SIGNATURE

P.E. NUMBER

DATE

NEW BELGRADE BRIDGE NB
OVER ROUTE 8\11\27
AUGUSTA KENNEBEC COUNTY

TEMPORARY CONCRETE BARRIER (2 OF 2)

SHEET NUMBER

13

OF 23

Filename: ...\plansel\013_ConcBarrier_02.dgn Division: Structures Username: clclley Date:4/20/2010

## STRAIGHT BARS

| MARK | QTY. | LENGTH | LOCATION | MARK | QTY. | LENGTH | LOCATION |
|---|---|---|---|---|---|---|---|
| | | | ABUTMENT NO. 1 | | | | |
| ▲ A501 | 22 | 1'-11" | | | | | |
| ▲ A502 | 14 | 10'-2" | | | | | |
| | | | ABUTMENT NO. 2 | | | | |
| ▲ B501 | 22 | 1'-11" | | | | | |
| ▲ B502 | 14 | 10'-2" | | | | | |
| | | | PIER NO. 1 | | | | |
| ▲ 1P501 | 24 | 15'-4" | | | | | |
| 1P502 | 64 | 2'-0" | | | | | |
| | | | PIER NO. 2 | | | | |
| ▲ 2P501 | 24 | 15'-7" | | | | | |
| 2P502 | 64 | 2'-0" | | | | | |
| | | | DECK SLAB | | | | |
| S501 | 12 | 43'-0" | | | | | |
| S502 | 12 | 29'-7" | | | | | |

## BENT BARS

| MARK | QTY. | LENGTH | TYPE | A | B | C | D | E | F | G | H | O | R | LOCATION |
|---|---|---|---|---|---|---|---|---|---|---|---|---|---|---|
| | | | | | | | | | | | | | | ABUTMENT NO. 1 |
| A550 | 20 | 3'-2" | L | 2'-4" | 0'-10" | | | | | | | | | |
| ▲ A551 | 22 | 2'-8" | 14 | 0'-8" | 0'-6" | 1'-6" | 0'-0" | 0'-0" | | | | 0'-4 1/4" | | |
| A552 | 28 | 6'-2" | S6 | 0'-10" | 1'-8" | 1'-2" | 1'-8" | | | 0'-10" | | | | |
| | | | | | | | | | | | | | | ABUTMENT NO. 2 |
| B550 | 20 | 3'-2" | L | 2'-4" | 0'-10" | | | | | | | | | |
| ▲ B551 | 22 | 2'-8" | 14 | 0'-8" | 0'-6" | 1'-6" | 0'-0" | 0'-0" | | | | 0'-4 1/4" | | |
| B552 | 28 | 6'-2" | S6 | 0'-10" | 1'-8" | 1'-2" | 1'-8" | | | 0'-10" | | | | |
| | | | | | | | | | | | | | | PIER NO. 1 |
| 1P450 | 34 | 9'-9" | H | 0'-4 1/2" | 2'-0" | 2'-6" | 2'-0" | 2'-6" | | 0'-4 1/2" | | | | |
| | | | | | | | | | | | | | | PIER NO. 2 |
| 2P450 | 34 | 9'-9" | H | 0'-4 1/2" | 2'-0" | 2'-6" | 2'-0" | 2'-6" | | 0'-4 1/2" | | | | |
| | | | | | | | | | | | | | | DECK SLAB |
| S550 | 408 | 5'-5" | SC | 0'-10" | 1'-3" | 1'-3" | 1'-3" | | | 0'-10" | | | | |

## TYPE - BENDING DIAGRAMS

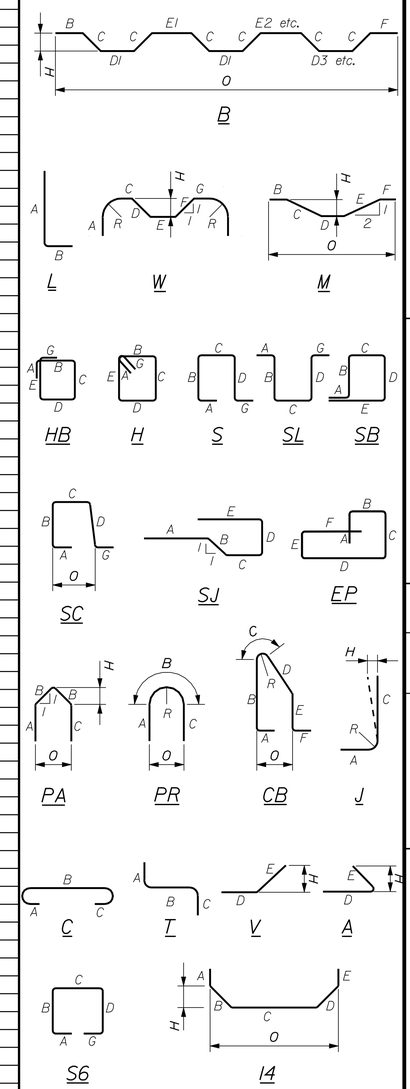


All dimensions are out-to-out of bar.

Bending details and hooks shall conform to the recommendations of the current revision of ACI Standard 315 and ACI Standard 318.

Reinforcing Bar: ASTM A615/A615M, Grade 60

## GENERAL NOTES

1. The first two digits following the letter(s) of the mark indicate the size ofthe bar:

   Mark "A502" = bar size #5
   Mark "P805" = bar size #8
   Mark "S650" = bar size #6

2. Each crank bar, Type B, may be replaced by two (2) straight bars (one top and one bottom) of the same bar size as the crank bar. Payment in either case shall be based on crank bars as schedule on the plans.

*Reinforcing Key:*

▲ = *Cut to Fit in Field*

STATE OF MAINE
DEPARTMENT OF TRANSPORTATION

BR-1508(800)X

PIN 15088.00

BRIDGE NO. 5793

BRIDGE PLANS

| PROJ. MANAGER | T. BRYANT | BY | DATE |
|---|---|---|---|
| DESIGN-DETAILED | GME | CLC | 4-20-2010 |
| CHECKED-REVIEWED | SMG | TSB | 4-20-2010 |
| DESIGN2-DETAILED2 | --- | --- | --- |
| DESIGN3-DETAILED3 | --- | --- | --- |
| REVISIONS 1 | --- | --- | --- |
| REVISIONS 2 | --- | --- | --- |
| REVISIONS 3 | --- | --- | --- |
| REVISIONS 4 | --- | --- | --- |
| FIELD CHANGES | --- | --- | --- |

SIGNATURE

P.E. NUMBER

DATE

NEW BELGRADE BRIDGE NB
OVER ROUTE 8\11\27
AUGUSTA KENNEBEC COUNTY

# REINFORCING STEEL SCHEDULE

SHEET NUMBER

14

OF 23

Filename: ...\st\planset\014_Rebar_01.dgn Division: Structures Username: clcilley Date:4/20/2010

## GENERAL

1. All traffic control equipment and devices shall conform to the latest edition of the Maine Department of Transportation (MaineDOT) Standard Specifications for Highway and Bridges and the Standard Details for Highway and Bridges.

2. All traffic control equipment and layouts shall conform to the 2009 edition of the Federal Highway Administration (FHWA) Manual on Uniform Traffic Control Devices (MUTCD), Chapter 6.

3. All traffic control signs, sign support structures, channelizing devices, arrow panels, variable message signs, and other traffic control equipment along I-95 shall meet or exceed NCHRP 350 Test Level 3 (TL-3) requirements. All other traffic control equipment shall meet or exceed NCHRP 350 Test Level 2 (TL-2) requirements.

4. Construction signs and channelizing devices shall be spaced in accordance with the tables on Construction Detail 652(17).

5. Placement of construction signs shall be adjusted to avoid obstructing existing signs and to ensure proper sight lines to the construction signs as determined by the Resident.

6. All construction signs, equipment, barrier wall, and other devices shall be in place prior to starting work. All non-applicable signing, equipment, and devices shall be removed, turned away from traffic or covered at the end of each work period.

7. All construction signing, equipment and devices shall be maintained in like-new condition. Any signs, equipment, or devices found to be damaged or unserviceable shall be replaced.

8. Any work in the roadway adjacent to an active lane of travel shall have a minimum lateral offset of 6'-0", or 1'-0" in the presence of barrier wall.

9. Portable Changeable Message Signs (PCMS) shall be provided by the Contractor. Messages shall be reviewed and approved by the Resident. PCMS shall be deployed at least 7 days prior to a shift in traffic pattern.

10. Battery operated warning lights shall be provided on all channelizing devices along merging tapers (for lane closures). Warning lights shall be provided on every other channelizing device for shifting tapers upstream and downsteam of the bridge.

11. Barrier wall adjacent to a travel lane shall include delineators spaced at least one per barrier segment.

12. The work zone shall be illuminated at night. Lighting shall be provided at the ends of barrier wall sections and at the barrier wall tangent point.

13. Where indicated, existing pavement markings which conflict with temporary pavement markings shall be removed as directed by the Resident.

14. Where lane shifts are required to cross existing rumble strips, Contractor shall fill rumble strips with Hot Mix Asphalt. Payment shall be incidental to Item 202.205 Rumble Strips-Shoulder.

15. Barrier wall shall extend at least 60 feet beyond bridge joint.

16. The regional detour signs shall be paid for as Item 652.35 Construction Signs (Square Foot).

17. The coordination of messages on MaineDOT's permanent DMS at Winthrop Street shall be incidental to the Item 652.41 Portable-Changeable Message Sign.

18. Maintenance of traffic along Route 8/11/27 shall be provided by the Contractor and shall be paid for as Item 652.361 Maintenance of Traffic Control Devices (Lump Sum). This item shall include all materials, equipment, transportation, storage, maintenance, and removal necessary to maintain two way traffic under the bridge in accordance with the Contractor's approved TCP. Flaggers and Traffic Officers shall be paid separately.

19. Maintenance of traffic for I-95, the interchange ramps, and the regional detour and all other temporary traffic control not covered by other project items shall be paid for as Item 652.36 Maintenance of Traffic Control Devices (Calendar Day). Flaggers and Traffic Officers shall be paid separately.

20. The repair to the rumble strips for temporary traffic control shall be paid for as Item 202.205 Rumble Strips-Shoulder.

21. At the completion of the project, all locations where rumble strips were removed for temporary traffic control shall be reconstructed to pre-existing conditions and shall be paid as Item 202.205 Rumble Strips-Shoulder.

## SEQUENCE OF CONSTRUCTION

The construction of this project is anticipated to be conducted in three phases:

* Substructure repairs, modifications and under bridge painting
* Deck Replacement, Phase 1: deck replacement on east side of bridge
* Deck Replacement, Phase 2: deck replacement on west side of bridge

## SUBSTRUCTURE/PAINTING TRAFFIC CONTROL

1. Contractor shall maintain a minimum of three 11'-0" lanes under the bridge at all times.

2. Contractor shall prepare a traffic control plan (TCP) for substructure work for review and approval by the Resident. Contractor shall submit TCP to Resident a minimum of 21 days prior to beginning substructure work.

3. Lane closures under the bridge shall conform to MaineDOT Standard 652(11). Both ends of barrier wall shall be protected with impact attenuators.

4. When work is performed on Pier 1, the lane use under the bridge shall be one westbound lane and two eastbound lanes. The inside eastbound lane shall use the existing westbound left turn lane under the bridge.

5. When work is performed on Pier 2, the lane use under the bridge shall be one westbound lane and two eastbound lanes. West of the bridge, the westbound lane shall widen to provide left turn storage for the left turn at the traffic signal at the southbound I-95 on-ramp.

6. Contractor shall adjust signal timing at the interchange ramp intersections as needed and as directed by the Resident.

## PHASE 1 DECK REPLACEMENT TRAFFIC CONTROL

1. Contractor shall maintain a minimum of two 11'-0" lanes over the bridge throughout the Phase 1 deck replacement work. A minimum of 1'-0" offset shall be provided adjacent to the barrier wall and adjacent to the existing bridge rail.

2. The existing I-95 northbound through lanes shall be shifted to the left shoulder of the northbound roadway over the bridge. Contractor shall fill rumble strips using Hot Mix Asphalt (Shim) in locations where traffic uses any portion of the shoulder for through or exiting traffic.

3. The leading end of the barrier wall shall be protected with impact attenuators.

## PHASE 2 DECK REPLACEMENT TRAFFIC CONTROL

1. Contractor shall maintain a minimum of one 11'-0" lane over the bridge throughout the Phase 2 deck replacement work. A minimum of 1'-0" offset shall be provided adjacent to the barrier wall and adjacent to the new bridge rail.

2. Contractor shall provide a parallel deceleration lane using the existing I-95 northbound shoulder. The shoulder lane shall be a minimum of 11'-0" wide, or 12'-0" when adjacent to guardrail. Contractor shall fill rumble strips using Hot Mix Asphalt in locations where traffic uses any portion of the shoulder for through or exiting traffic.

3. The I-95 northbound through lanes shall be shifted 3'-0" to the left using the existing left shoulder before the beginning of the parallel deceleration lane to provide the lateral space for the shoulder deceleration lane. Contractor shall fill rumble strips using Hot Mix Asphalt in locations where traffic uses any portion of the shoulder for through or exiting traffic.

4. The three lane section shall be maintained for 500 feet before beginning the left lane closure taper.

5. The left lane shall be closed with channelizing devices for the length of the work zone.

6. The leading end of the barrier wall shall be protected with impact attenuators.

## REGIONAL DETOUR TRAFFIC CONTROL

1. Contractor shall install detour signs, permanent changeable message signs and program permanent digital message sign near Winthrop Street prior to establishing Phase 1 deck replacement traffic control.

2. Detour signs shall be mounted on permanent (wood) sign supports within MaineDOT or City of Augusta Rights-of-Way.

3. Location of permanent changeable message signs shall be determined in the field by the Contractor and Resident.

4. Contractor shall coordiante signal timing adjustments with the City of Augusta for Western Avenue based on detour traffic operations.

## LEGEND

| | |
|---|---|
| DMS | PERMANENT DMS |
| PCMS | PORTABLE CHANGEABLE MESSAGE SIGN |
| | CONSTRUCTION SIGN |
| | IMPACT ATTENUATOR |
| | BARRIER WALL |
| | FLASHING ARROW BOARD |
| | SINGLE-FACED BARRIER WALL (SECTION) |
| | TEMPORARY BARRIER WALL (SECTION) |
| | GUARDRAIL (SECTION) |
| | DRUM (SECTION) |
| | LANE CLOSED |

STATE OF MAINE
DEPARTMENT OF TRANSPORTATION

BR-1508(800)X

PIN 15088.00

BRIDGE NO. 5793

BRIDGE PLANS

| | | BY | DATE |
|---|---|---|---|
| PROJ. MANAGER | T. BRYANT | | |
| DESIGN-DETAILED | M. SUENNEN | J. ROBERT | 4-20-2010 |
| CHECKED-REVIEWED | C. CILLEY | S. GUNN | 4-20-2010 |
| DESIGN2-DETAILED2 | ... | ... | ... |
| DESIGN3-DETAILED3 | ... | ... | ... |
| REVISIONS 1 | ... | ... | ... |
| REVISIONS 2 | ... | ... | ... |
| REVISIONS 3 | ... | ... | ... |
| REVISIONS 4 | ... | ... | ... |
| FIELD CHANGES | ... | ... | ... |

SIGNATURE

P.E. NUMBER

DATE

NEW BELGRADE BRIDGE NB
OVER ROUTE 8\11\27
AUGUSTA KENNEBEC COUNTY

TRAFFIC CONTROL PHASING NOTES

SHEET NUMBER

15

OF 23

Filename: ...\st\planset\015_TCP-Notes.dgn Division: Structures Username: clcilley Date:4/20/2010

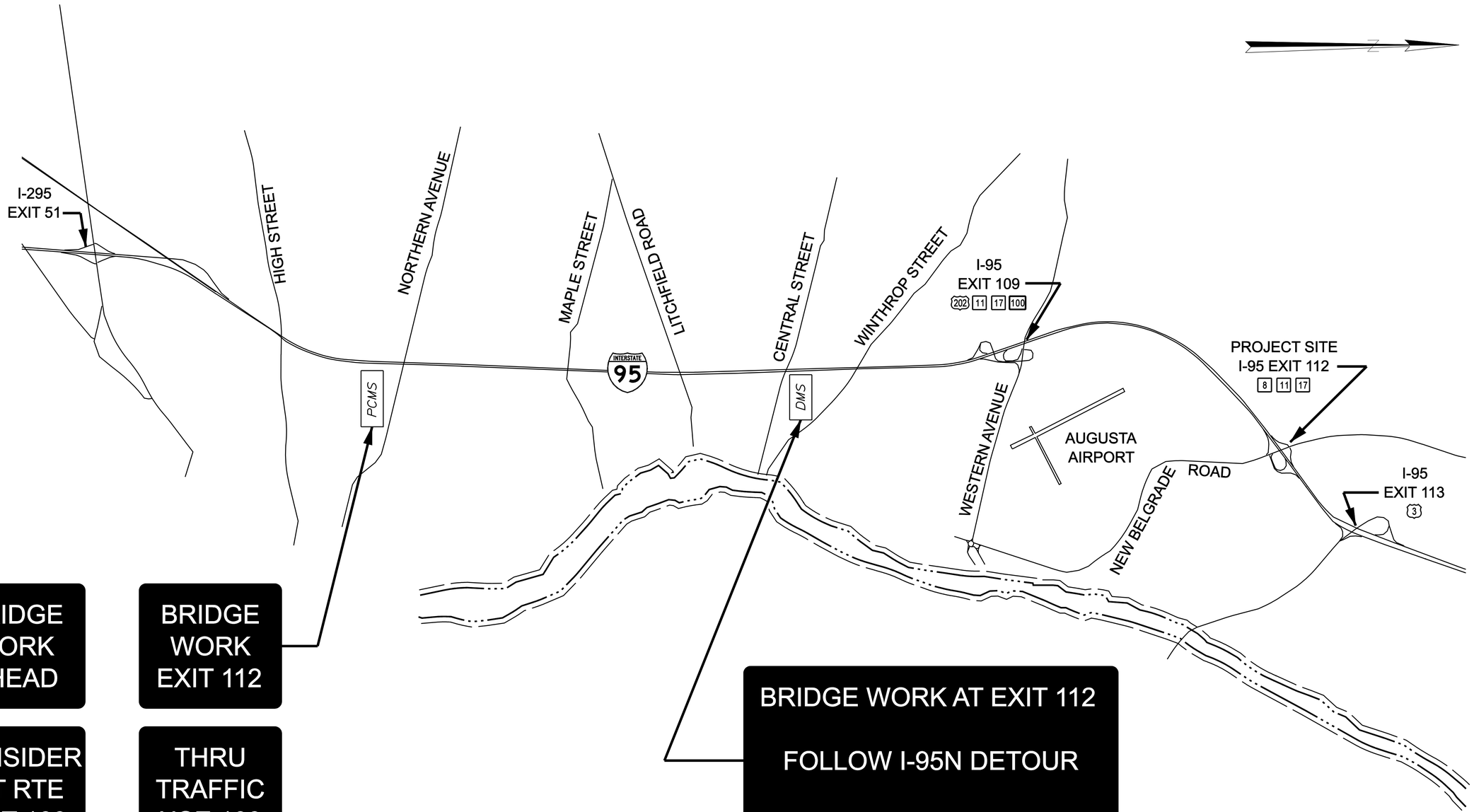


BRIDGE WORK AHEAD

CONSIDER ALT RTE EXIT 109

PHASE I

BRIDGE WORK EXIT 112

THRU TRAFFIC USE 109

PHASE II

BRIDGE WORK AT EXIT 112

FOLLOW I-95N DETOUR

USE EXIT 109

USE EXISTING DMS LOCATED NEAR WINTHROP STREET
PHASE I &II

CHANGEABLE
MESSAGE SIGNS
- SAMPLE MESSAGE SCREENS

STATE OF MAINE
DEPARTMENT OF TRANSPORTATION

BR-1508(800)X

PIN 15088.00

BRIDGE NO. 5793

BRIDGE PLANS

| | | | |
|---|---|---|---|
| PROJ. MANAGER | T. BRYANT | BY | DATE |
| DESIGN-DETAILED | M. SUENNEN | J. ROBERT | 4-20-2010 |
| CHECKED-REVIEWED | C. CILLEY | S. GUNN | 4-20-2010 |
| DESIGN2-DETAILED2 | --- | --- | --- |
| DESIGN3-DETAILED3 | --- | --- | --- |
| REVISIONS 1 | --- | --- | --- |
| REVISIONS 2 | --- | --- | --- |
| REVISIONS 3 | --- | --- | --- |
| REVISIONS 4 | --- | --- | --- |
| FIELD CHANGES | --- | --- | --- |

SIGNATURE

P.E. NUMBER

DATE

NEW BELGRADE BRIDGE NB
OVER ROUTE 8\11\27
AUGUSTA KENNEBEC COUNTY

REGIONAL DETOUR PLAN

SHEET NUMBER
16
OF 23

Filename: ...\st\planset\016_TCP-DET1.dgn Division: Structures Username: clcilley Date:4/20/2010

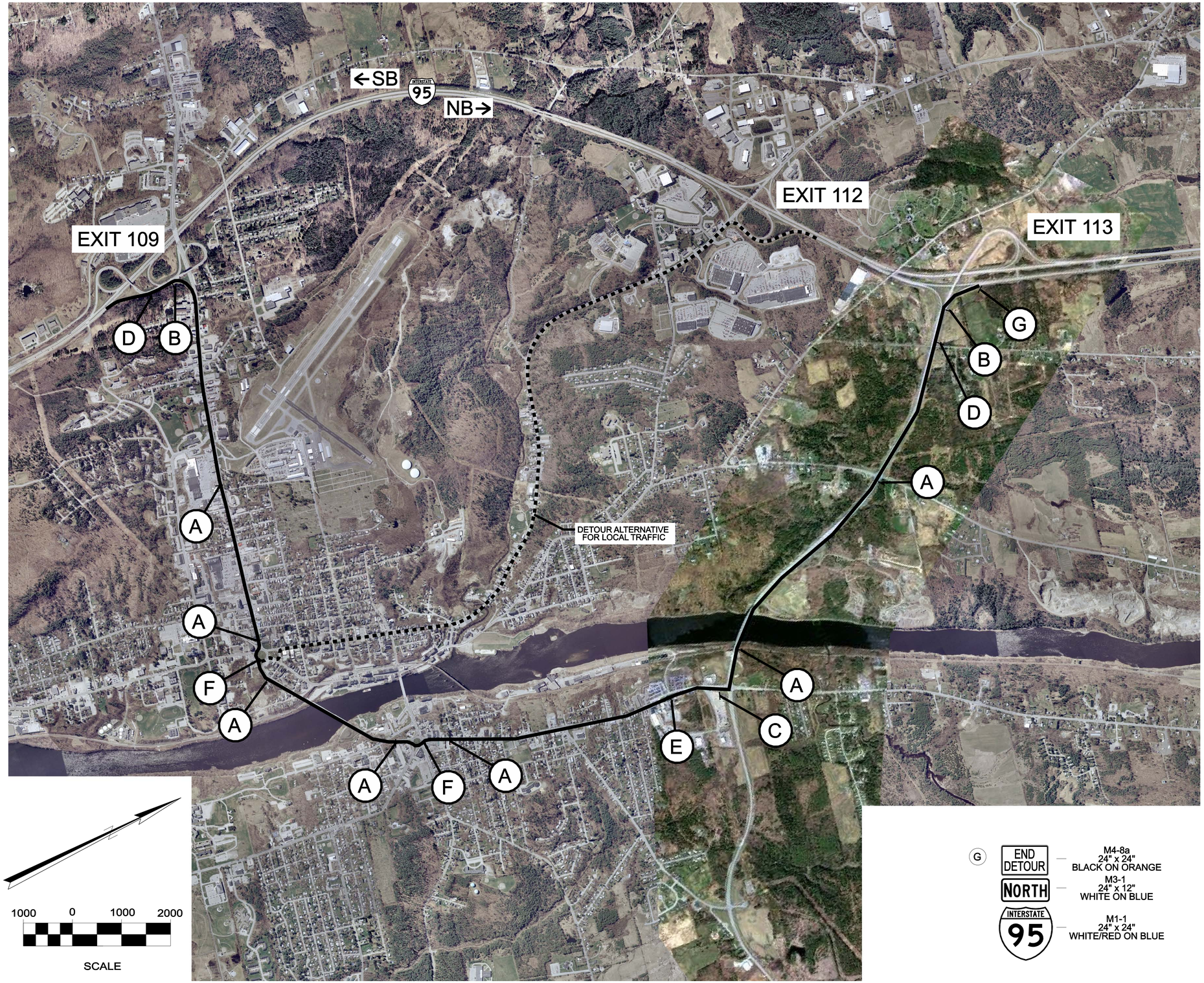


(A)
- DETOUR — M4-8, 24" x 12", BLACK ON ORANGE
- NORTH — M3-1, 24" x 12", WHITE ON BLUE
- INTERSTATE 95 — M1-1, 24" x 24", WHITE/RED ON BLUE
- ↑ — M6-3, 21" x 15", WHITE ON BLUE

(B)
- DETOUR — M4-8, 24" x 12", BLACK ON ORANGE
- NORTH — M3-1, 24" x 12", WHITE ON BLUE
- INTERSTATE 95 — M1-1, 24" x 24", WHITE/RED ON BLUE
- → — M6-1, 21" x 15", WHITE ON BLUE

(C)
- DETOUR — M4-8, 24" x 12", BLACK ON ORANGE
- NORTH — M3-1, 24" x 12", WHITE ON BLUE
- INTERSTATE 95 — M1-1, 24" x 24", WHITE/RED ON BLUE
- ← — M6-2, 21" x 15", WHITE ON BLUE

(D)
- DETOUR — M4-8, 24" x 12", BLACK ON ORANGE
- NORTH — M3-1, 24" x 12", WHITE ON BLUE
- INTERSTATE 95 — M1-1, 24" x 24", WHITE/RED ON BLUE
- ↱ — M5-1R, 21" x 15", WHITE ON BLUE

(E)
- DETOUR — M4-8, 24" x 12", BLACK ON ORANGE
- NORTH — M3-1, 24" x 12", WHITE ON BLUE
- INTERSTATE 95 — M1-1, 24" x 24", WHITE/RED ON BLUE
- ↰ — M5-1L, 21" x 15", WHITE ON BLUE

(F)
- DETOUR — M4-8, 24" x 12", BLACK ON ORANGE
- NORTH — M3-1, 24" x 12", WHITE ON BLUE
- INTERSTATE 95 — M1-1, 24" x 24", WHITE/RED ON BLUE
- ↗ — M6-2R, 21" x 15", WHITE ON BLUE

(G)
- END DETOUR — M4-8a, 24" x 24", BLACK ON ORANGE
- NORTH — M3-1, 24" x 12", WHITE ON BLUE
- INTERSTATE 95 — M1-1, 24" x 24", WHITE/RED ON BLUE

DETOUR ROUTE

STATE OF MAINE
DEPARTMENT OF TRANSPORTATION

BR-1508(800)X

PIN 15088.00

BRIDGE NO. 5793

BRIDGE PLANS

| | | BY | DATE |
|---|---|---|---|
| PROJ. MANAGER | T. BRYANT | | |
| DESIGN-DETAILED | M. SUENNEN | J. ROBERT | 4-20-2010 |
| CHECKED-REVIEWED | C. CILLEY | S. GUNN | 4-20-2010 |
| DESIGN2-DETAILED2 | --- | --- | --- |
| DESIGN3-DETAILED3 | --- | --- | --- |
| REVISIONS 1 | --- | --- | --- |
| REVISIONS 2 | --- | --- | --- |
| REVISIONS 3 | --- | --- | --- |
| REVISIONS 4 | --- | --- | --- |
| FIELD CHANGES | --- | --- | --- |

SIGNATURE

P.E. NUMBER

DATE

NEW BELGRADE BRIDGE NB
OVER ROUTE 8\11\27
AUGUSTA KENNEBEC COUNTY

# REGIONAL DETOUR PLAN

SHEET NUMBER

17

OF 23

Filename: ...\st\planset\017_TCP-DET2.dgn Division: Structures Username: clcilley Date:4/20/2010

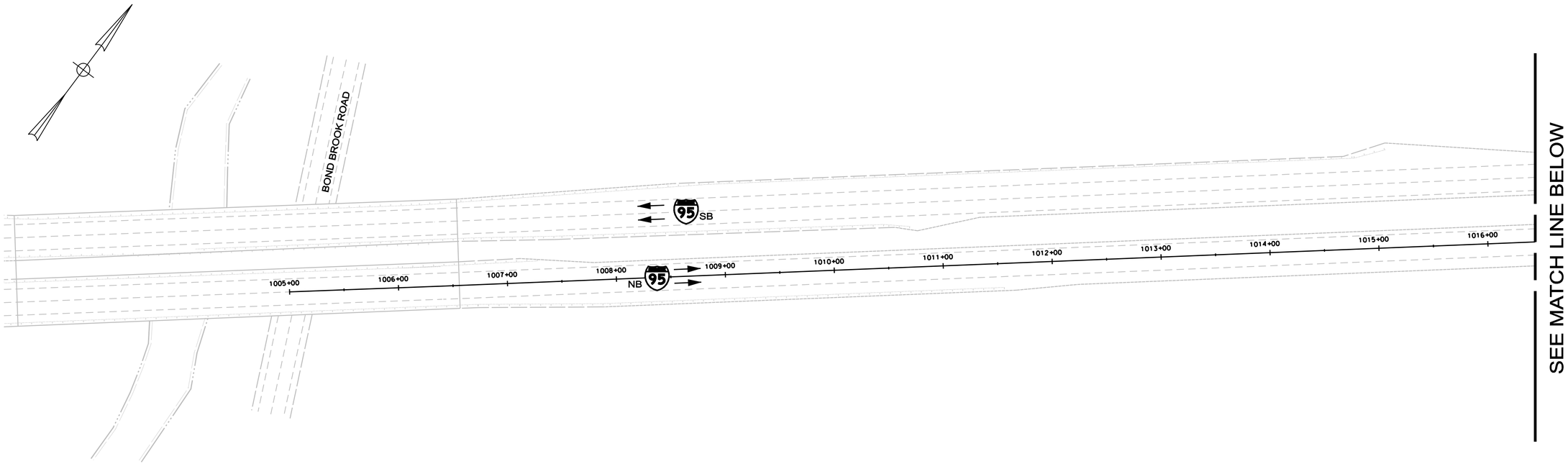


DECK REPLACEMENT
TRAFFIC CONTROL
PHASE 1

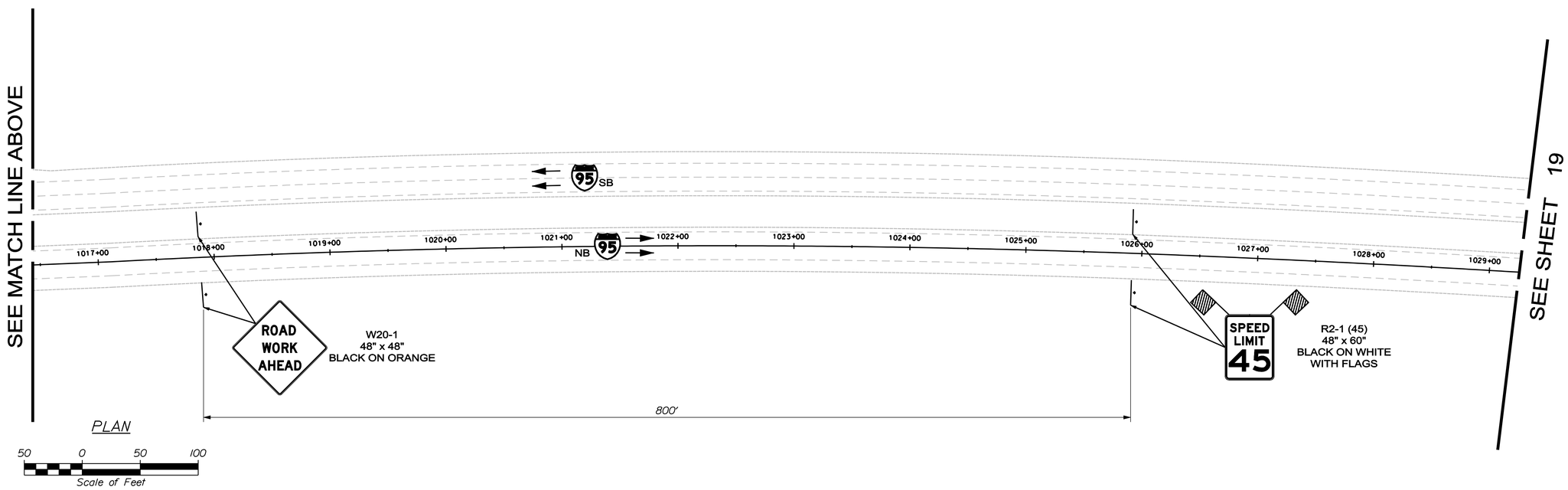


STATE OF MAINE
DEPARTMENT OF TRANSPORTATION

BR-1508(800)X

PIN 15088.00

BRIDGE NO. 5793

BRIDGE PLANS

| | | | |
|---|---|---|---|
| PROJ. MANAGER | T. BRYANT | BY | DATE |
| DESIGN-DETAILED | M. SIENNEN | J. ROBERT | 4-20-2010 |
| CHECKED-REVIEWED | C. CILLEY | S. GUNN | 4-20-2010 |
| DESIGN2-DETAILED2 | --- | --- | --- |
| DESIGN3-DETAILED3 | --- | --- | --- |
| REVISIONS 1 | --- | --- | --- |
| REVISIONS 2 | --- | --- | --- |
| REVISIONS 3 | --- | --- | --- |
| REVISIONS 4 | --- | --- | --- |
| FIELD CHANGES | --- | --- | --- |

SIGNATURE

P.E. NUMBER

DATE

NEW BELGRADE BRIDGE NB
OVER ROUTE 8\11\27
AUGUSTA KENNEBEC COUNTY

TRAFFIC CONTROL PLANS

SHEET NUMBER

18

OF 23

Filename: ...\st\planset\018_TCP-Phase1.dgn Division: Structures Username: clcilley Date:4/20/2010

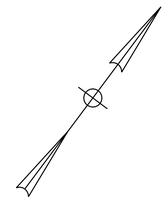

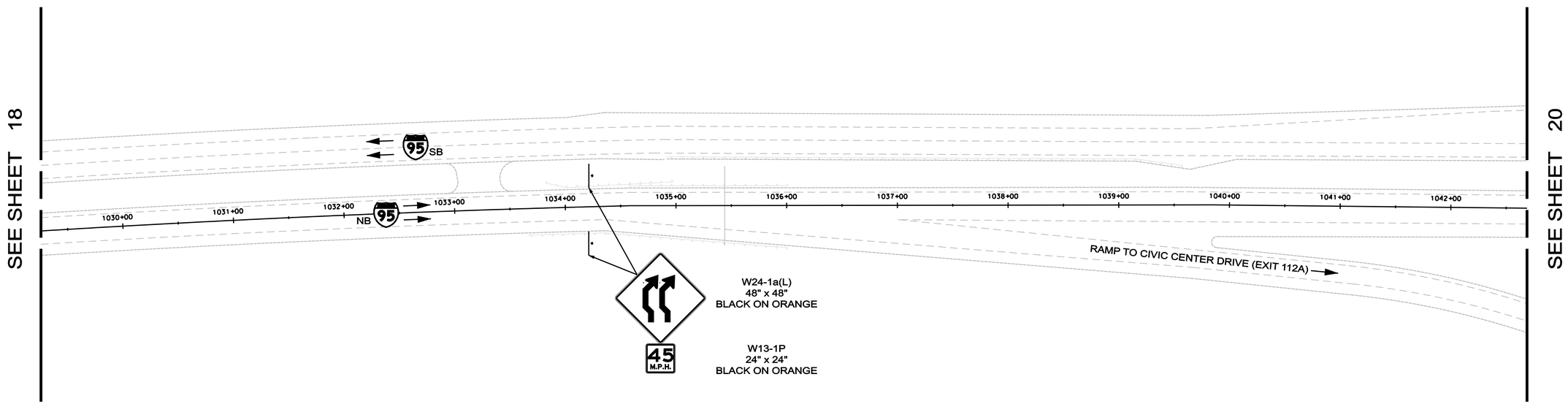


PLAN

50 0 50 100

Scale of Feet

DECK REPLACEMENT
TRAFFIC CONTROL
PHASE 1

STATE OF MAINE
DEPARTMENT OF TRANSPORTATION

BR-1508(800)X

PIN
15088.00

BRIDGE NO. 5793

BRIDGE PLANS

| | | | |
|---|---|---|---|
| PROJ. MANAGER | T. BRYANT | BY | DATE |
| DESIGN-DETAILED | M. SUENNEN | J. ROBERT | 4-20-2010 |
| CHECKED-REVIEWED | C. CILLEY | S. GUNN | 4-20-2010 |
| DESIGN2-DETAILED2 | --- | --- | --- |
| DESIGN3-DETAILED3 | --- | --- | --- |
| REVISIONS 1 | --- | --- | --- |
| REVISIONS 2 | --- | --- | --- |
| REVISIONS 3 | --- | --- | --- |
| REVISIONS 4 | --- | --- | --- |
| FIELD CHANGES | --- | --- | --- |

SIGNATURE

P.E. NUMBER

DATE

NEW BELGRADE BRIDGE NB
OVER ROUTE 8\11\27
AUGUSTA KENNEBEC COUNTY

TRAFFIC CONTROL PLANS

SHEET NUMBER

19

OF 23

Filename: ...\st\planset\019_TCP-Phase1.dgn Division: Structures Username: clcilley Date:4/20/2010

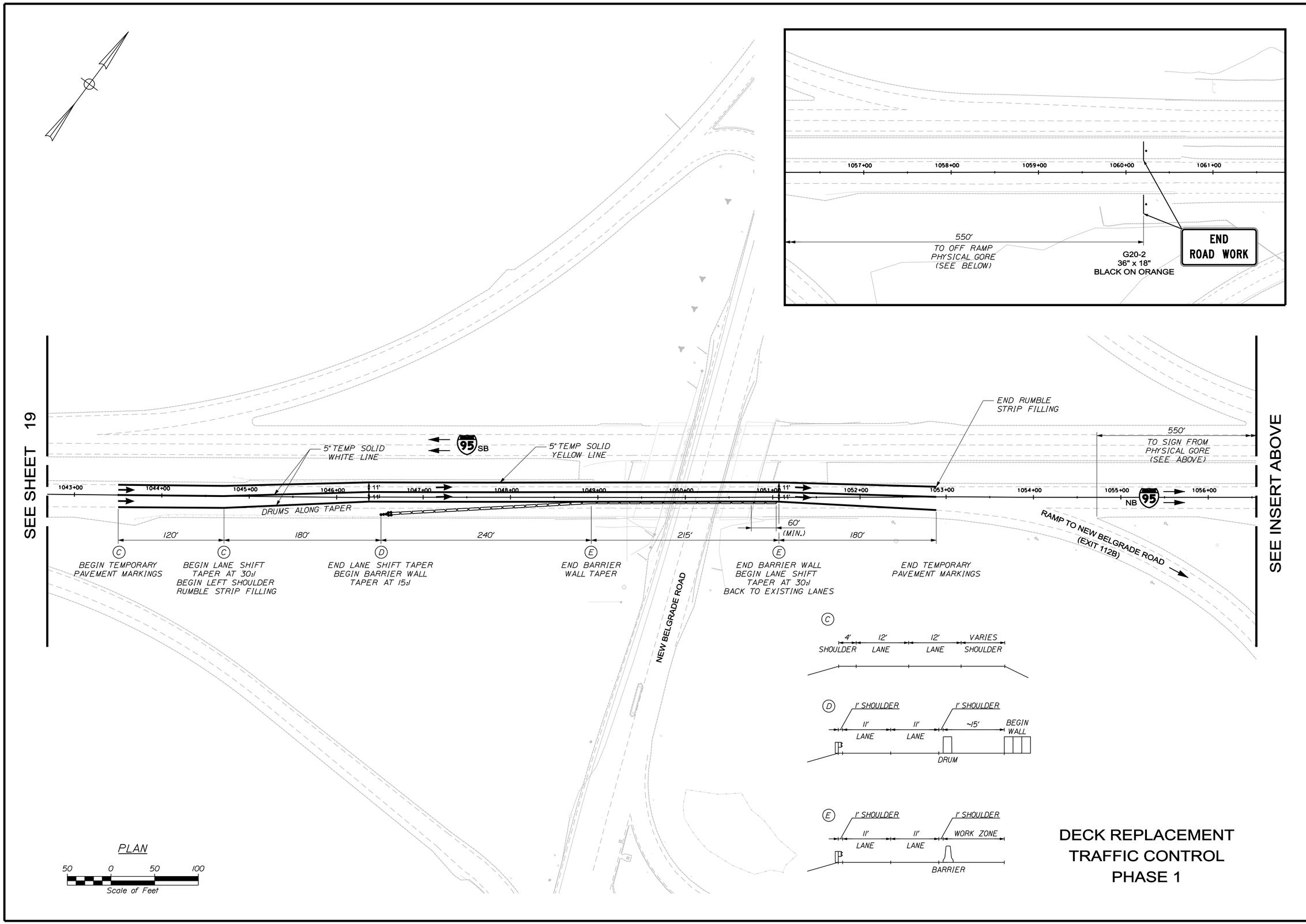


# DECK REPLACEMENT TRAFFIC CONTROL PHASE 1

STATE OF MAINE
DEPARTMENT OF TRANSPORTATION

BR-1508(800)X

PIN 15088.00

BRIDGE NO. 5793

BRIDGE PLANS

| | | BY | DATE |
|---|---|---|---|
| PROJ. MANAGER | T. BRYANT | | |
| DESIGN-DETAILED | M. SIENNIEN | J. ROBERT | 4-20-2010 |
| CHECKED-REVIEWED | C. CILLEY | S. GUNN | 4-20-2010 |
| DESIGN2-DETAILED2 | --- | --- | --- |
| DESIGN3-DETAILED3 | --- | --- | --- |
| REVISIONS 1 | --- | --- | --- |
| REVISIONS 2 | --- | --- | --- |
| REVISIONS 3 | --- | --- | --- |
| REVISIONS 4 | --- | --- | --- |
| FIELD CHANGES | --- | --- | --- |

SIGNATURE

P.E. NUMBER

DATE

NEW BELGRADE BRIDGE NB
OVER ROUTE 8\11\27
AUGUSTA KENNEBEC COUNTY

TRAFFIC CONTROL PLANS

SHEET NUMBER

20

OF 23

Filename: ...\st\planset\020_TCP-Phase1.dgn Division: Structures Username: clcilley Date:4/20/2010

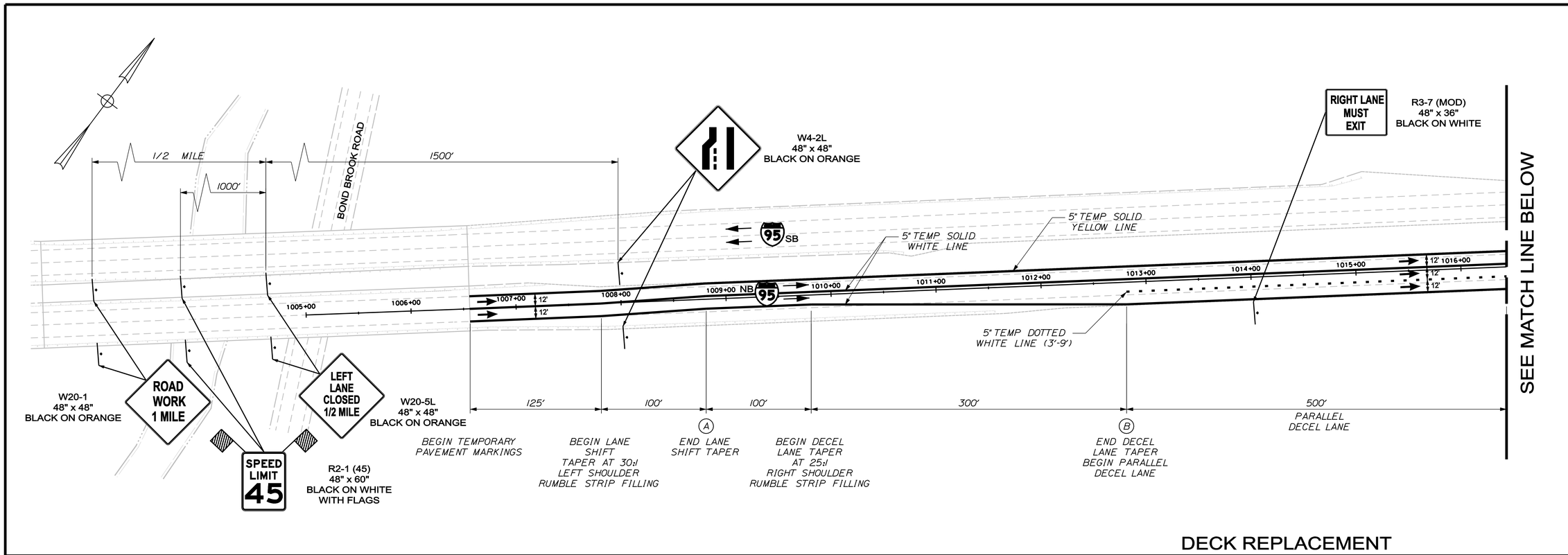


## DECK REPLACEMENT
## TRAFFIC CONTROL
## PHASE 2

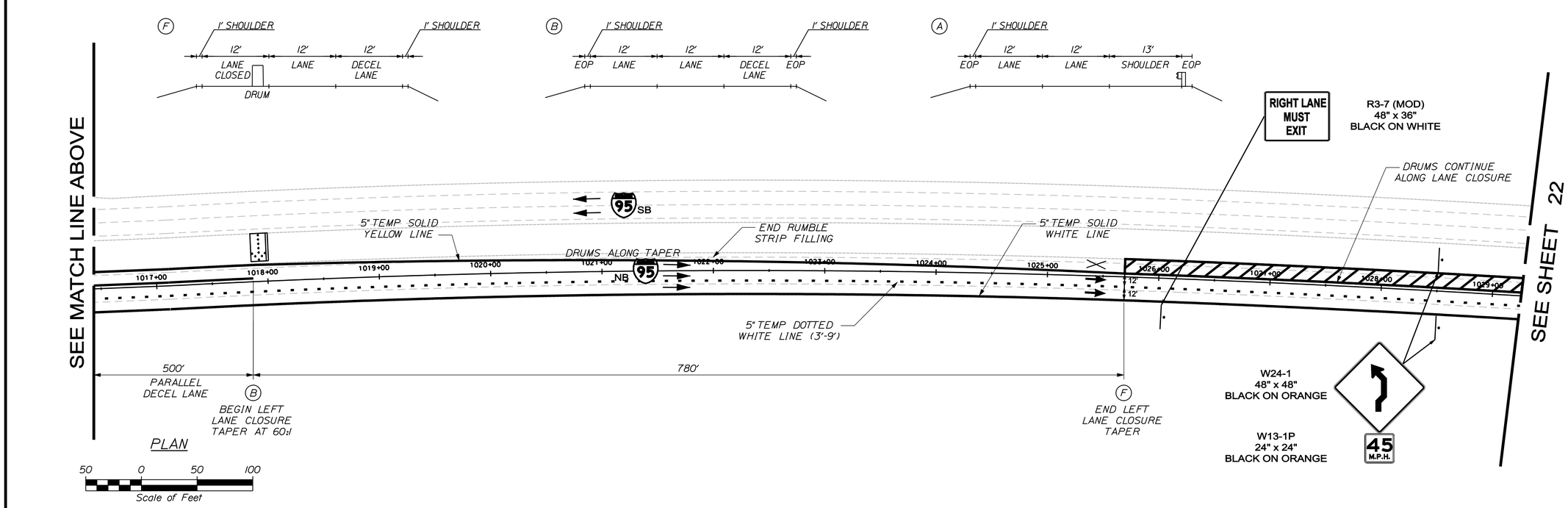


STATE OF MAINE
DEPARTMENT OF TRANSPORTATION

BR-1508(800)X

PIN 15088.00

BRIDGE NO. 5793

BRIDGE PLANS

| | BY | DATE |
|---|---|---|
| PROJ. MANAGER | T. BRYANT | |
| DESIGN-DETAILED | M. SUENNEN | 4-20-2010 |
| CHECKED-REVIEWED | C. CILLEY | 4-20-2010 |
| DESIGN2-DETAILED2 | --- | --- |
| DESIGN3-DETAILED3 | --- | --- |
| REVISIONS 1 | --- | --- |
| REVISIONS 2 | --- | --- |
| REVISIONS 3 | --- | --- |
| REVISIONS 4 | --- | --- |
| FIELD CHANGES | --- | --- |

SIGNATURE

P.E. NUMBER

DATE

NEW BELGRADE BRIDGE NB
OVER ROUTE 8\11\27
AUGUSTA KENNEBEC COUNTY

TRAFFIC CONTROL PLANS

SHEET NUMBER
21
OF 23

Filename: ...\st\planset\021_TCP-Phase2.dgn Division: Structures Username: clcilley Date:4/20/2010

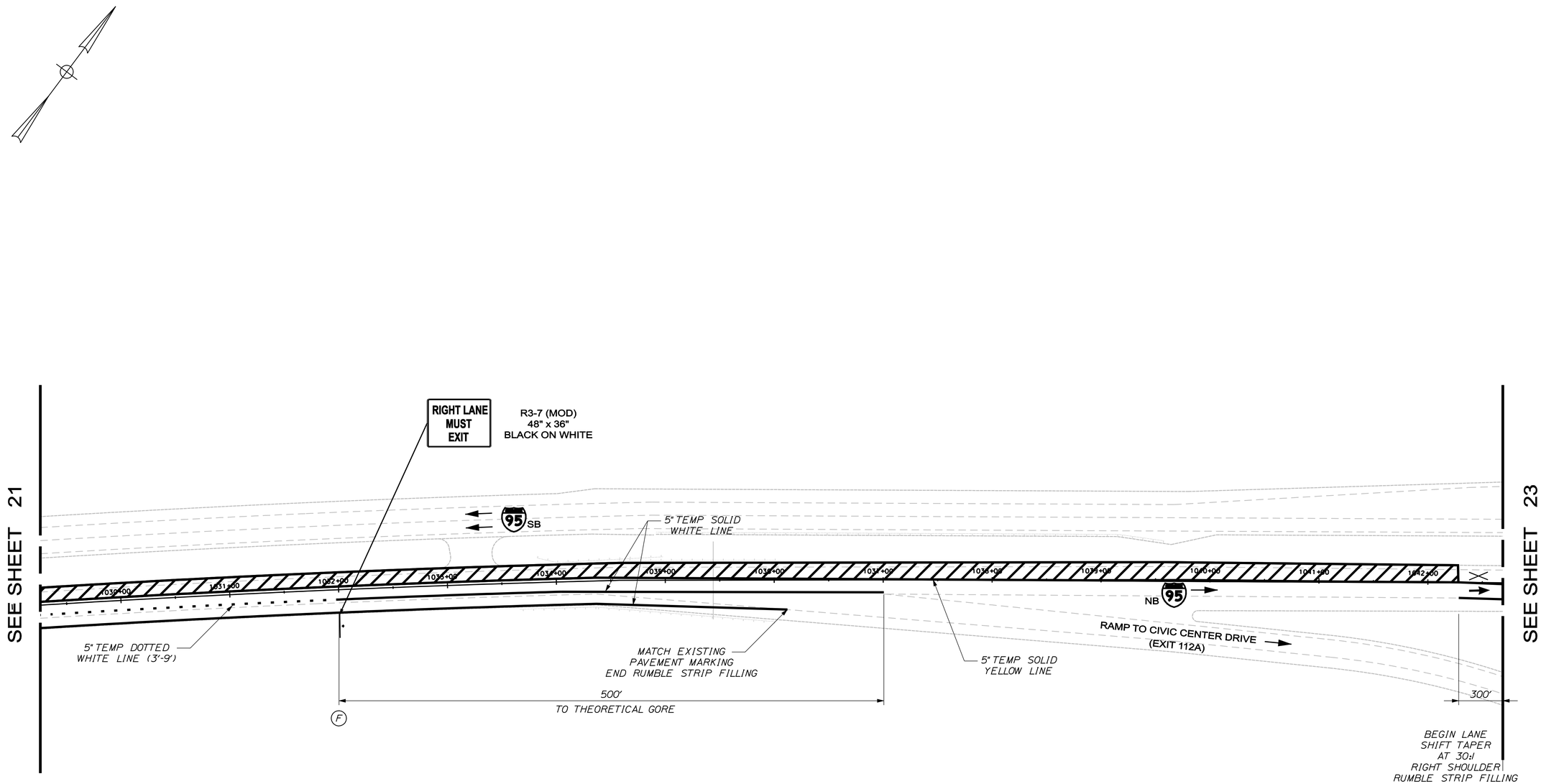


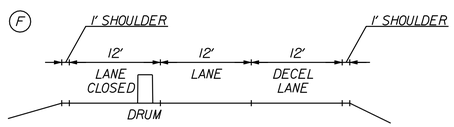


PLAN

50 0 50 100

Scale of Feet

DECK REPLACEMENT
TRAFFIC CONTROL
PHASE 2

STATE OF MAINE
DEPARTMENT OF TRANSPORTATION

BR-1508(800)X

PIN 15088.00

BRIDGE NO. 5793

BRIDGE PLANS

| | | | |
|---|---|---|---|
| PROJ. MANAGER | T. BRYANT | BY | DATE |
| DESIGN-DETAILED | M. SUENNEN | J. ROBERT | 4-20-2010 |
| CHECKED-REVIEWED | C. CILLEY | S. GUNN | 4-20-2010 |
| DESIGN2-DETAILED2 | --- | --- | --- |
| DESIGN3-DETAILED3 | --- | --- | --- |
| REVISIONS 1 | --- | --- | --- |
| REVISIONS 2 | --- | --- | --- |
| REVISIONS 3 | --- | --- | --- |
| REVISIONS 4 | --- | --- | --- |
| FIELD CHANGES | --- | --- | --- |

SIGNATURE

P.E. NUMBER

DATE

NEW BELGRADE BRIDGE NB
OVER ROUTE 8\11\27
AUGUSTA KENNEBEC COUNTY

TRAFFIC CONTROL PLANS

SHEET NUMBER

22

OF 23

Filename: ...\st\planset\022_TCP-Phase2.dgn Division: Structures Username: clcilley Date:4/20/2010

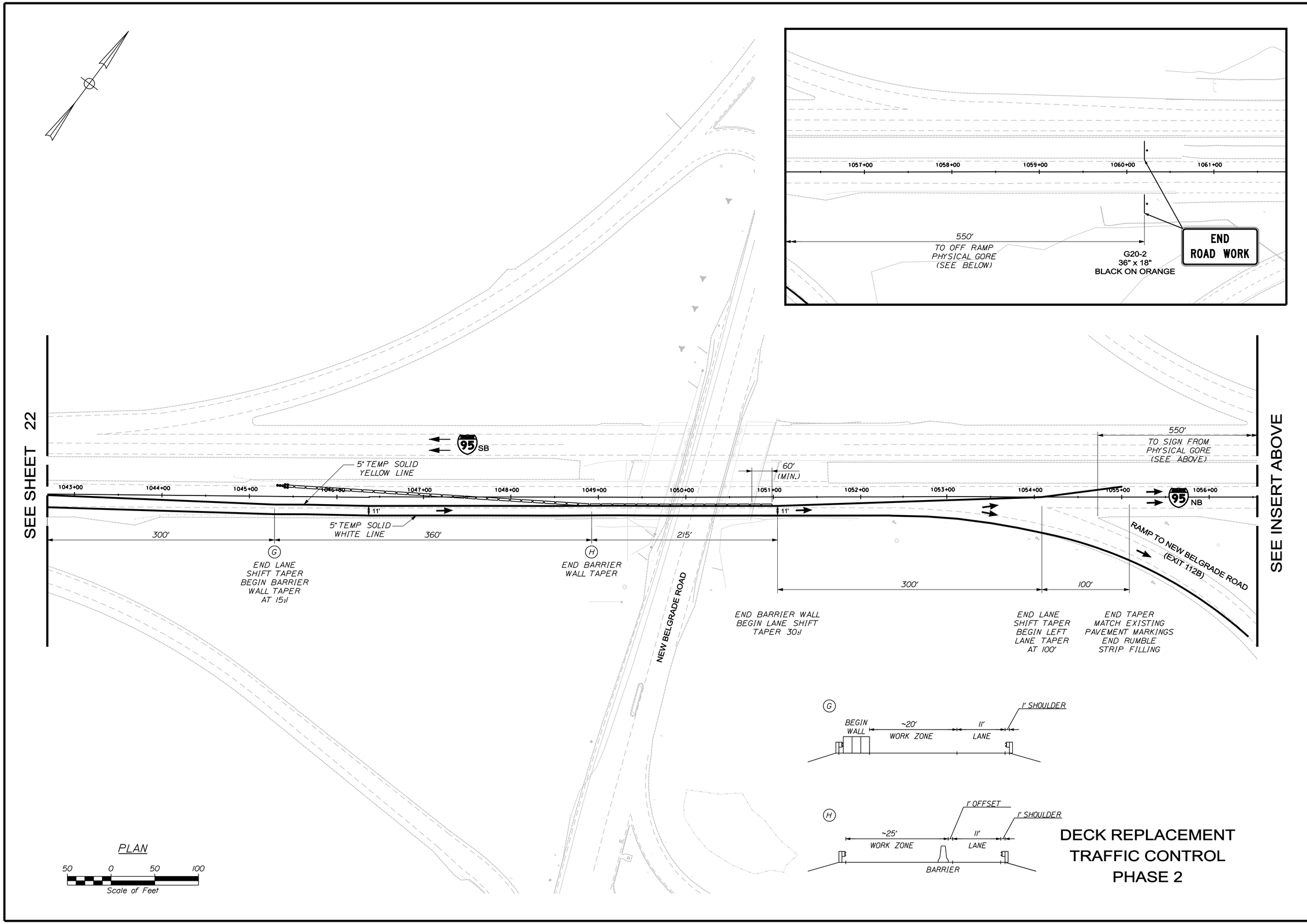


DECK REPLACEMENT
TRAFFIC CONTROL
PHASE 2

STATE OF MAINE
DEPARTMENT OF TRANSPORTATION

BR-1508(800)X

PIN
15088.00

BRIDGE NO. 5793

BRIDGE PLANS

| | BY | DATE |
|---|---|---|
| PROJ. MANAGER | T. BRYANT | |
| DESIGN-DETAILED | M. SUENNEN | J. ROBERT | 4-20-2010 |
| CHECKED-REVIEWED | C. CILLEY | S. GUNN | 4-20-2010 |
| DESIGN2-DETAILED2 | --- | --- | --- |
| DESIGN3-DETAILED3 | --- | --- | --- |
| REVISIONS 1 | --- | --- | --- |
| REVISIONS 2 | --- | --- | --- |
| REVISIONS 3 | --- | --- | --- |
| REVISIONS 4 | --- | --- | --- |
| FIELD CHANGES | --- | --- | --- |

SIGNATURE

P.E. NUMBER

DATE

NEW BELGRADE BRIDGE NB
OVER ROUTE 8\11\27
AUGUSTA KENNEBEC COUNTY

TRAFFIC CONTROL PLANS

SHEET NUMBER
23
OF 23

Filename: ...\st\planset\023_TCP-Phase2.dgn Division: Structures Username: clcilley Date:4/20/2010