STATE OF MAINE
DEPARTMENT OF TRANSPORTATION

LYMAN
YORK COUNTY
KENNEBUNK RIVER BRIDGE
OVER
KENNEBUNK RIVER
ROUTE 111
STATE PROJECT NO. 16713.00
BRIDGE CULVERT REHABILITATION
BRIDGE NO. 5825

TRAFFIC DATA

Current (2010) AADT	13390
Future (2020) AADT	16070
DHV - % of AADT	10
Design Hour Volume	1875
Heavy Trucks (% of AADT)	7
Heavy Trucks (% of DHV)	5
Directional Distribution (% of DHV)	61
18 kip Equivalent P 2.0	615
18 kip Equivalent P 2.5	586

HYDROLOGIC DATA

Drainage Area	4.498 sq mi
Design Discharge (Q50)	347.6 cfs
Check Discharge (Q100)	403.9 cfs
Headwater Elevation (Q50)	163.57 ft
Headwater Elevation (Q100)	164.21 ft
Discharge Velocity (Q50)	10.41 fps
Discharge Velocity (Q100)	10.92 fps
Headwater Elevation (Q1.1)	159.17 ft
Discharge Velocity (Q1.1)	6.23 fps
Headwater Elevation (Q25)	163.00 ft

MATERIALS

Concrete:	
Invert Lining	Modified Class "LP" or "Shotcrete"
Fish Weir	Class "A"
Reinforcing Steel	ASTM A 615/A 615M, Grade 60

BASIC DESIGN STRESSES

Concrete Class "A"	f 'c = 4,350 psi
Concrete Modified "LP" or "Shotcrete"	f 'c = 5,000 psi
Reinforcing Steel	f y = 60,000 psi

UTILITIES

Central Maine Power Company
Northern New England Operations, LLC.
Time Warner Cable

MAINTENANCE OF TRAFFIC

Maintain two 11'-0" wide lanes allowing occasional alternating two - way traffic using flaggers when a lane closure is necessary.

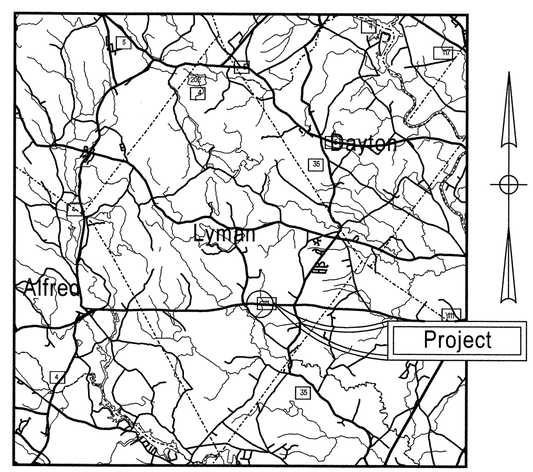

LOCATION MAP

2 0 2 4
Scale of Miles

LIST OF DRAWINGS

Title Sheet	1
Estimated Quantities	2
General Plan	3
Invert Lining Plan & Elevation	4
Invert Lining Details	5
Interior Wier Details	6
Exterior Wier Plan & Elevation	7
Exterior Wier Details	8
Right of Way Map	9

STATE OF MAINE
DEPARTMENT OF TRANSPORTATION

		DATE
APPROVED		
COMMISSIONER:		7/31/10
CHIEF ENGINEER:		5/31/10

STATE OF MAINE ROBERT S. BLUNT 11158 LICENSED PROFESSIONAL ENGINEER

SIGNATURE	
P.E. NUMBER	11158
DATE	3-30-10

PROJECT INFORMATION

PROGRAM	BRIDGE PROGRAM
PROJECT MANAGER	Jim D. Wentworth
DESIGNER	Joel R. Velleux
CONSULTANT	
PROJECT RESIDENT	
CONTRACTOR	
PROJECT COMPLETION DATE	

PIN 16713.00

16713.00

LYMAN
KENNEBUNK RIVER BRIDGE

TITLE SHEET

SHEET NUMBER
1
OF 9

Filename:\00\bridge\msta\001_Title.dgn Division: BRIDGE Username: alan.nadeau Date:3/30/2010

ESTIMATED QUANTITIES			
ITEM NO.	DESCRIPTION	QUANTITY	UNIT
203.25	GRANULAR BORROW	25	CY
206.061	STR. EARTH EXC. - DRAINAGE & MINOR STRUCT., BELOW GRADE	50	CY
502.325	STRUCTURAL CONCRETE CULVERT INVERT LINING (28 CY)	1	LS
502.326	STRUCTURAL CONCRETE - FISH WEIRS (18 CY)	1	LS
511.07	COFFERDAM:	1	LS
511.07	COFFERDAM:	1	LS
503.12	REINFORCING STEEL, FABRICATED AND DELIVERED	5400	LB
503.13	REINFORCING STEEL, PLACING	5400	LB
606.366	GUARDRAIL, REMOVE & RESET TYPE 3C	50	LF
610.08	PLAIN RIPRAP	65	CY
613.319	EROSION CONTROL BLANKET	10	SY
618.1411	SEEDING METHOD NUMBER 3 - PLAN QUANTITY	3	UN
619.1201	MULCH - PLAN QUANTITY	3	UN
620.58	EROSION CONTROL GEOTEXTILE	98	SY
629.05	HAND LABOR, STRAIGHT TIME	20	HR
631.12	ALL PURPOSE EXCAVATOR (INCLUDING OPERATOR)	10	HR
631.172	TRUCK - LARGE (INCLUDING OPERATOR)	10	HR
652.33	DRUM	10	EA
652.34	CONE	20	EA
652.35	CONSTRUCTION SIGNS (60 CD)	100	SF
652.361	MAINTENANCE OF TRAFFIC CONTROL DEVICES	1	LS
652.38	FLAGGER	300	HR
656.75	TEMPORARY SOIL EROSION AND WATER POLLUTION CONTROL	1	LS
659.10	MOBILIZATION	1	LS

GENERAL CONSTRUCTION NOTES

1. All Utility Facilities shall be adjusted by the respective Utilities unless otherwise noted.

2. All work shall be done in accordance with the latest revision of the Maine Department of Transportation's Best Management Practices for Erosion and Sediment Control.

3. For clearing limits requirements, reference Special Provision section 104. The exact limits shall be established in the field by the Resident. Payment for clearing will be incidental to related Contract items

4. Reinforcing steel schedule will be the responsibility of the Contractor. Refer to subsection 503.03 of the Standard Specifications for more information. Payment for all work associated with developing reinforcing steel schedules will be considered incidental to related Contract items.

5. Quantities included for pay items measured and paid for by Lump Sum are estimated quantities and are provided by MaineDOT for informational purposes only. Lump Sum pay items will be paid for at the Contract Bid amount, with no addition or reduction in payment to the Contractor if the actual final quantities are different from the MaineDOT provided estimated quantities, except as follows:

a. If a Lump Sum pay item is eliminated, the requirements of Standard Specifications Section 109.2, Elimination of Items, will take precedence.

b. If other Contract Documents specifically allow a change in payment for a Lump Sum pay item, those requirements will be followed.

c. If a design change results in changes to estimated quantities for Lump Sum pay items, price adjustments will be made in accordance with Standard Specifications Section 109.7, Equitable Adjustments to Compensation.

STATE OF MAINE
DEPARTMENT OF TRANSPORTATION

16713.00

PIN 16713.00

BRIDGE NO. 5825

BRIDGE PLANS

PROJ. MANAGER		BY	DATE
DESIGN-DETAILED	JRV	JDW	
CHECKED-REVIEWED	JRV	ADN	
DESIGN2-DETAILED2	-----	-----	-----
DESIGN3-DETAILED3	-----	-----	-----
REVISIONS 1	-----	-----	-----
REVISIONS 2	-----	-----	-----
REVISIONS 3	-----	-----	-----
REVISIONS 4	-----	-----	-----
FIELD CHANGES	-----	-----	-----

SIGNATURE

P.E. NUMBER

DATE

KENNEBUNK RIVER BRIDGE
KENNEBUNK RIVER
LYMAN YORK COUNTY

ESTIMATED QUANTITIES

SHEET NUMBER
2
OF 9

Filename: ...\BRIDGE\MSTA\002_Estimate.dgn Division: BRIDGE Username: Joel.R.Veilleux Date:4/7/2010

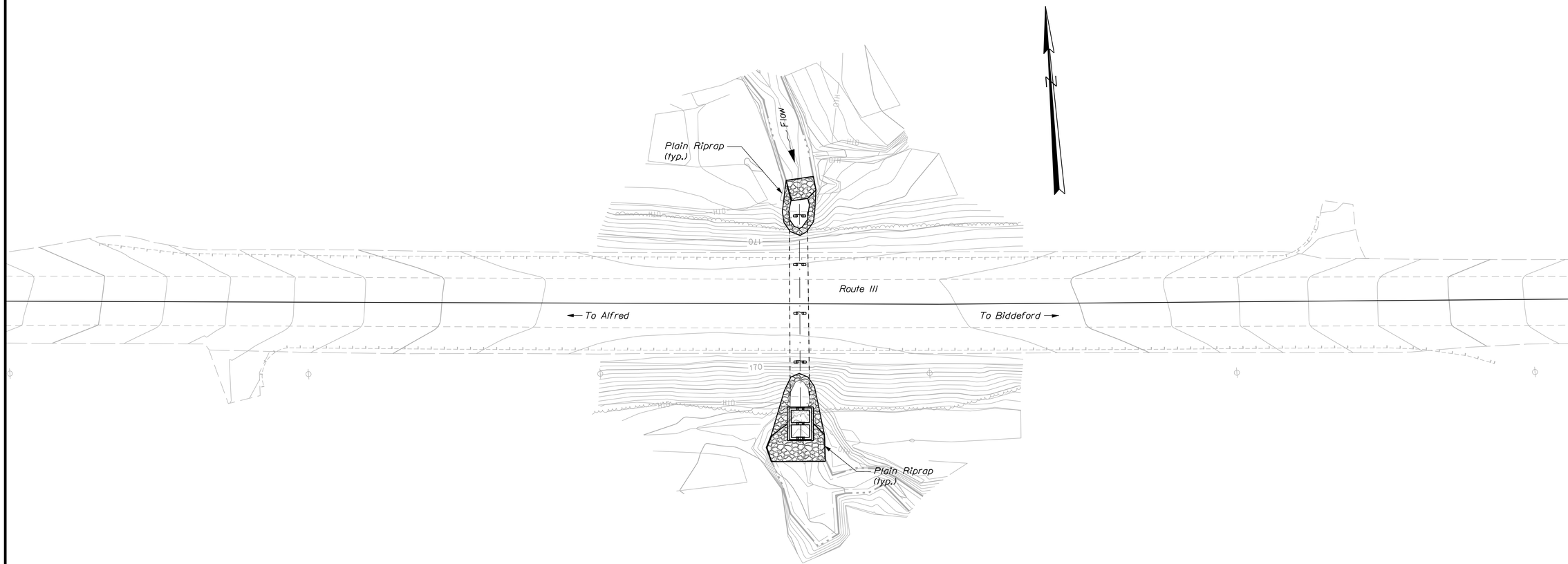

PLAN

25 0 25 50

Scale of Feet

STATE OF MAINE
DEPARTMENT OF TRANSPORTATION

16713.00

PIN
16713.00

BRIDGE NO. 5825

BRIDGE PLANS

PROJ. MANAGER	JDW	BY	DATE
DESIGN-DETAILED	JRV	ADN	
CHECKED-REVIEWED			
DESIGN2-DETAILED2			
DESIGN3-DETAILED3			
REVISIONS 1			
REVISIONS 2			
REVISIONS 3			
REVISIONS 4			
FIELD CHANGES			

SIGNATURE

P.E. NUMBER

DATE

KENNEBUNK RIVER BRIDGE
KENNEBUNK RIVER
LYMAN YORK COUNTY

GENERAL PLAN

SHEET NUMBER

3

OF 9

Filename: ...\00\bridge\msta\003_BDPlan1.dgn Division: BRIDGE Username: alan.nadeau Date:4/6/2010

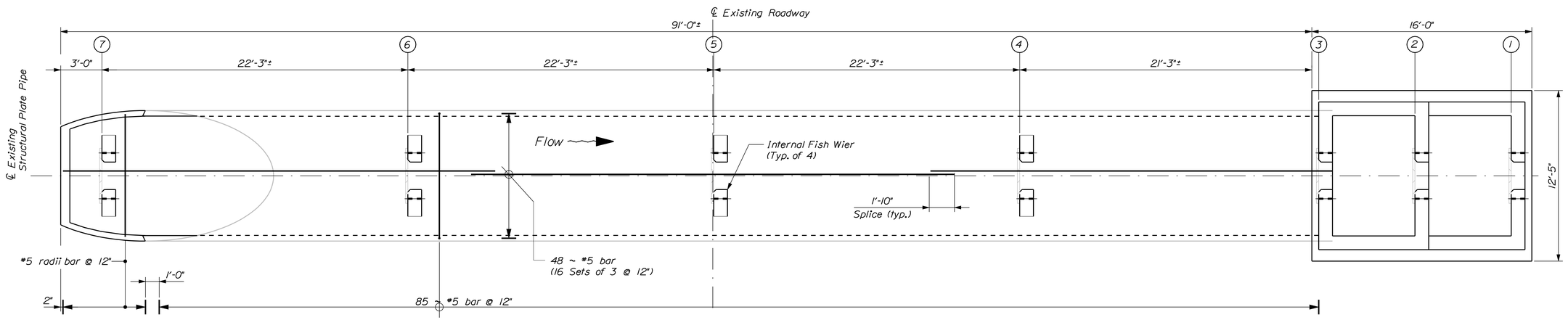

PLAN

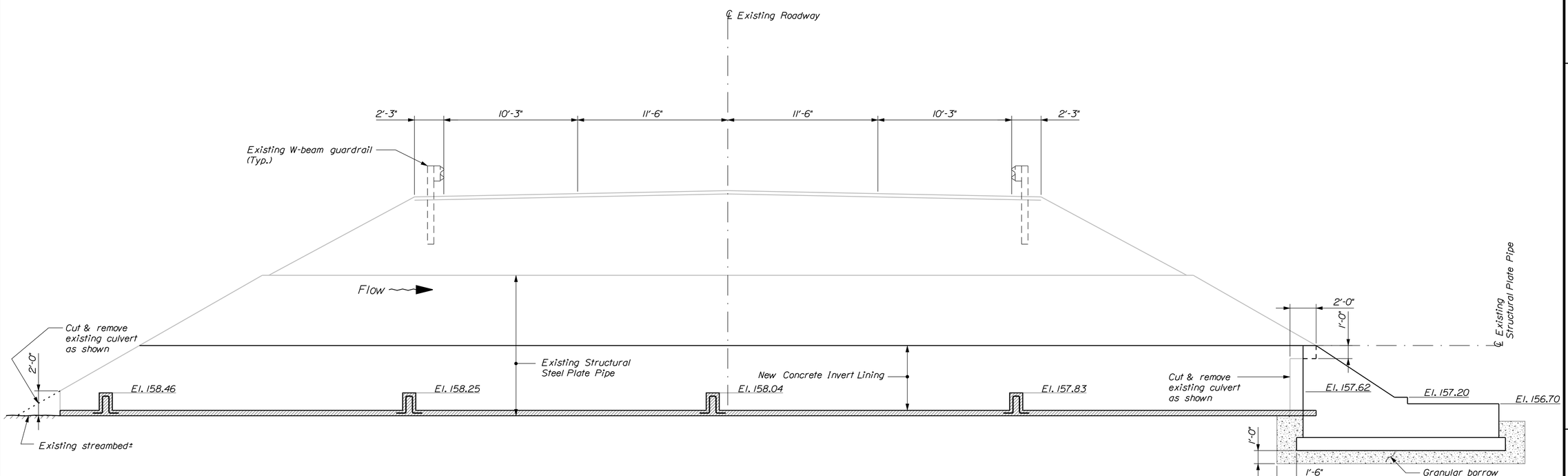

TRANSVERSE SECTION

STATE OF MAINE
DEPARTMENT OF TRANSPORTATION

16713.00

PIN 16713.00

BRIDGE NO. 5825

BRIDGE PLANS

PROJ. MANAGER	JDW	BY	DATE
DESIGN-DETAILED	JRV	ADN	
CHECKED-REVIEWED			
DESIGN2-DETAILED2			
DESIGN3-DETAILED3			
REVISIONS 1			
REVISIONS 2			
REVISIONS 3			
REVISIONS 4			
FIELD CHANGES			

SIGNATURE

P.E. NUMBER

DATE

KENNEBUNK RIVER BRIDGE
KENNEBUNK RIVER
LYMAN YORK COUNTY

PLAN & ELEVATION

SHEET NUMBER

4

OF 9

Filename: ...\bridge\msta\004_Pln&Elev.dgn Division: BRIDGE Username: alan.nadeau Date:4/6/2010

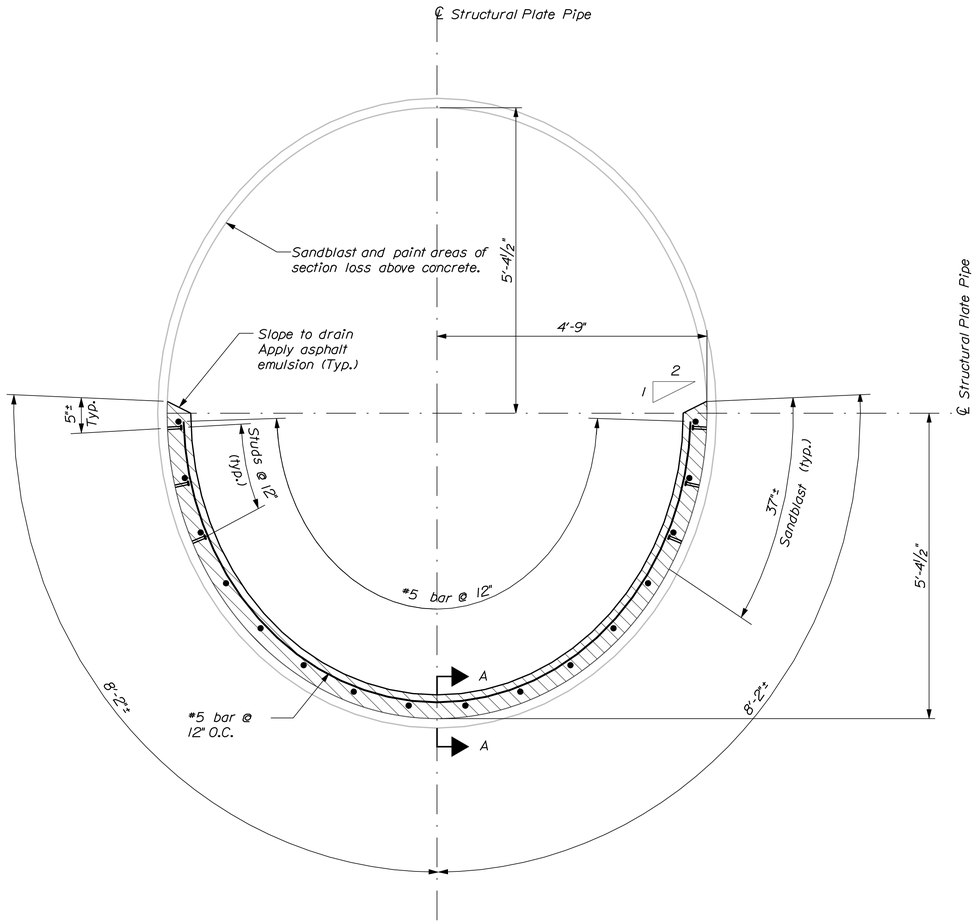

PIPE SECTION

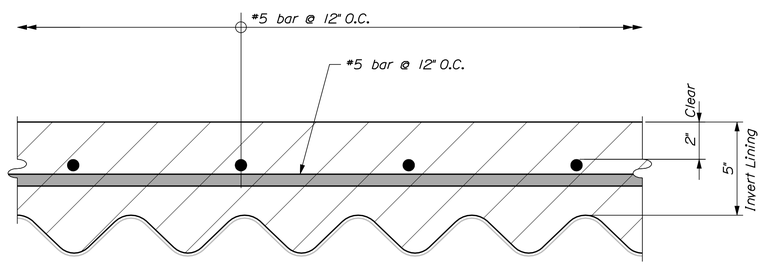

SECTION A-A

INVERT LINING NOTES

1. Surfaces of the pipe against which concrete is to be placed shall be thoroughly cleaned so as to remove all loose corrosion. All debris in existing pipe shall be removed and disposed of properly. In areas where the metal is non-existant, a preliminary concrete placement shall be made, using forms where required, to fill voids and to establish the original lines of the pipe. Payment for this work shall be considered incidental to the Item No. 502.325, Structural Concrete Invert Lining. The final placement shall then be made as shown.

2. Three rows of shear connectors shall be staggered longitudially at 12 inch spacing along each side of the barrel. Shear conncectors shall be 1/2 x 3 inch studs or machine bolts welded to the crests of the corrugations. Approximately 482 shear connectors are required. Payment shall be incidental to related Contract items.

3. Reinforcing steel shall have a minimum concrete cover of 2" unless noted otherwise.

4. The existing structural plate pipe may have a slight deformation requiring field bending and/or cutting of the reinforcing steel. Payment shall be considered incidental to related Contract items.

5. The concrete shall have a rough broom or gun finish along the entire length of the pipe invert.

6. Payment for the asphalt emusion shall be considered incidental to related Contract items.

7. Stream water shall not be allowed contact with fresh concrete until the PH factor is 8.5 or less and within the PH unit of the background PH level in the stream.

STATE OF MAINE
DEPARTMENT OF TRANSPORTATION

16713.00

PIN 16713.00

BRIDGE NO. 5825

BRIDGE PLANS

PROJ. MANAGER	JDW	BY	DATE
DESIGN-DETAILED	JRV	ADN	
CHECKED-REVIEWED	-----	-----	-----
DESIGN2-DETAILED2	-----	-----	-----
DESIGN3-DETAILED3	-----	-----	-----
REVISIONS 1	-----	-----	-----
REVISIONS 2	-----	-----	-----
REVISIONS 3	-----	-----	-----
REVISIONS 4	-----	-----	-----
FIELD CHANGES	-----	-----	-----

SIGNATURE

P.E. NUMBER

DATE

KENNEBUNK RIVER BRIDGE
KENNEBUNK RIVER
LYMAN YORK COUNTY

CULVERT DETAILS

SHEET NUMBER
5
OF 9

Filename: ...\msta\005_Pipe_Details.dgn Division: BRIDGE Username: alan.nadeau Date:4/6/2010

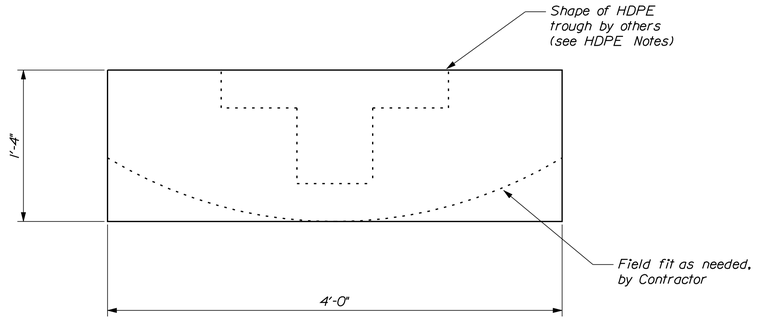

HDPE PLATE

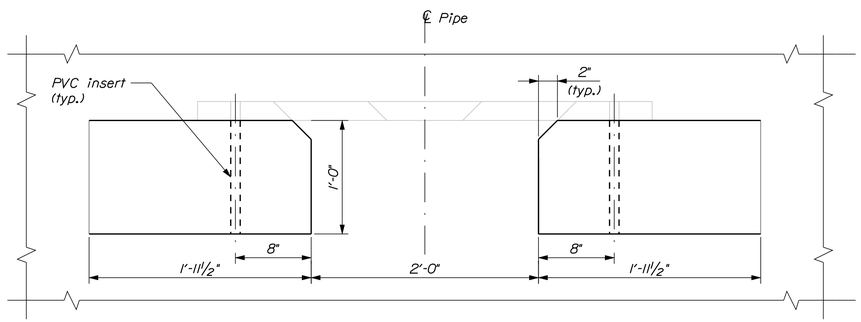

INTERNAL WEIR PLAN

Typical

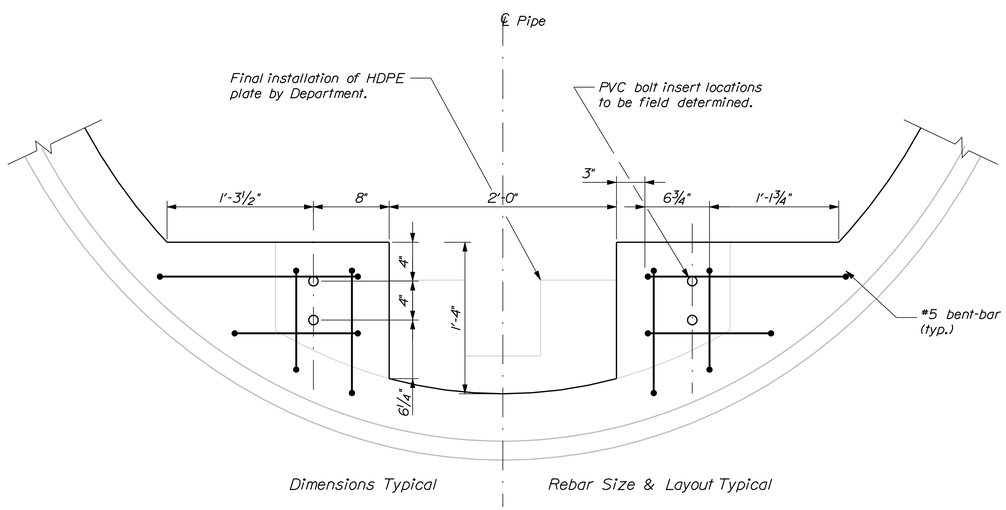

INTERNAL WEIR ELEVATION

Typical

HDPE WEIR PLATE NOTES

1. The furnishing of and the work associated with the HDPE weir plates, as shown on the plans and described in these notes, shall be considered incidental to the related concrete invert lining and fish weir items.

2. HDPE also known as high- density polyethylene shall be any commercially available, black, high- density polyethylene stock meeting the size requirements specified herein.

3. Rough- cut dimensions of each HDPE weir plate shall be 48" long by 16" wide and 2" thick.

4. Each of the seven weir plates shall be clearly marked to identify their specific location. With the most downstream weir plate being #1, each plate shall be numbered sequentially in an upstream manner.

5. HDPE plates shall also be clearly marked to indicate orientation of the plate. This can be accomplished by writing the word "flow" and an arrow indicating the direction of stream flow as it relates to the plate(s) intended final position.

6. Each HDPE plate will require (4)four 1" x12" long PVC pipes placed into the concrete portion of the weir as shown on the plans. These PVC pipes will serve as a through hole and be used to anchor each HDPE plate in place.

7. The HPDE plates must be scribed and cut to fit snug against the circular concrete invert lining, for all internal weirs.

8. Each HDPE plate shall have (4) four 1" holes cut to coincide with the four PVC holes in the concrete weir.

9. The contractor shall furnish the hardware required to connect the HDPE weir plates to the concrete, each plate will require (4) four ⅝"x15" long threaded rods, (8) eight washers and (8) eight nuts, all hardware to be galvanized.

10. Arrangements must be made with Charlie Hebson and/or John Perry of Maine Department of Transportation Environmental Office to transfer the HDPE plates and connectors into the Departments possession upon completion of the project. The Environmental Office phone number is 207-624-3100.

11. The contractor may elect to use stay-in-place FRP forms designed by others, for each weir location, in lieu of traditonal formwork.

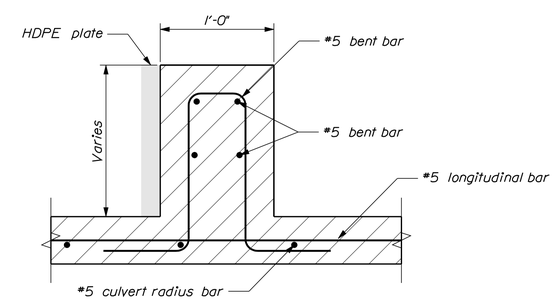

INTERNAL WEIR SECTION

Typical

STATE OF MAINE
DEPARTMENT OF TRANSPORTATION

16713.00

PIN 16713.00

BRIDGE NO. 5825

BRIDGE PLANS

		BY	DATE
PROJ. MANAGER			
DESIGN-DETAILED	JDW	ADN	
CHECKED-REVIEWED	JRV		
DESIGN2-DETAILED2			
DESIGN3-DETAILED3			
REVISIONS 1			
REVISIONS 2			
REVISIONS 3			
REVISIONS 4			
FIELD CHANGES			

SIGNATURE

P.E. NUMBER

DATE

KENNEBUNK RIVER BRIDGE
KENNEBUNK RIVER
LYMAN YORK COUNTY

PLANS

SHEET NUMBER

6

OF 9

Filename: ...\msta\006_Internal_Wier_Det.dgn Division: BRIDGE Username: alan.nadeau Date:4/6/2010

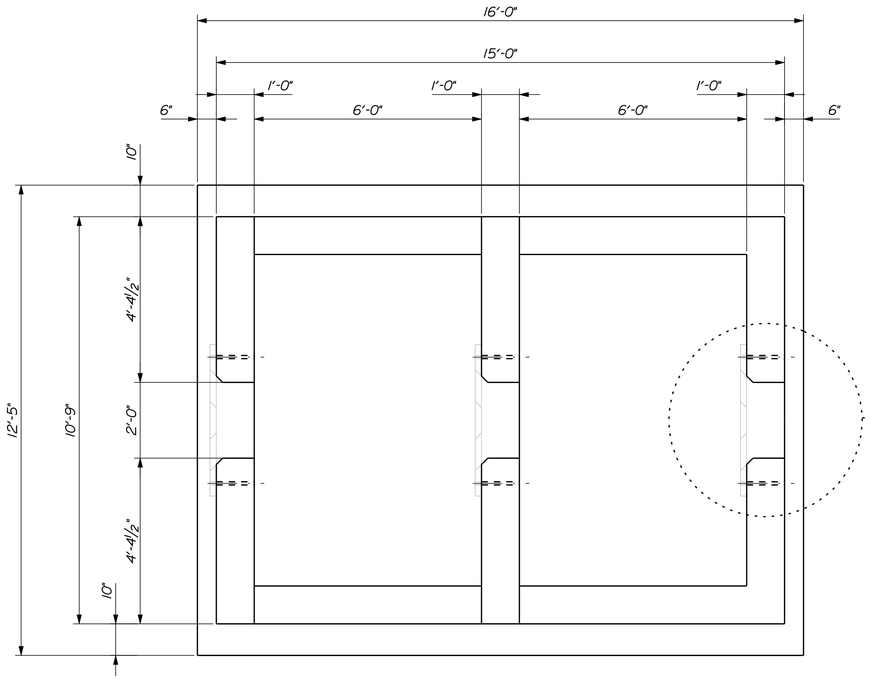

EXTERNAL WIER PLAN

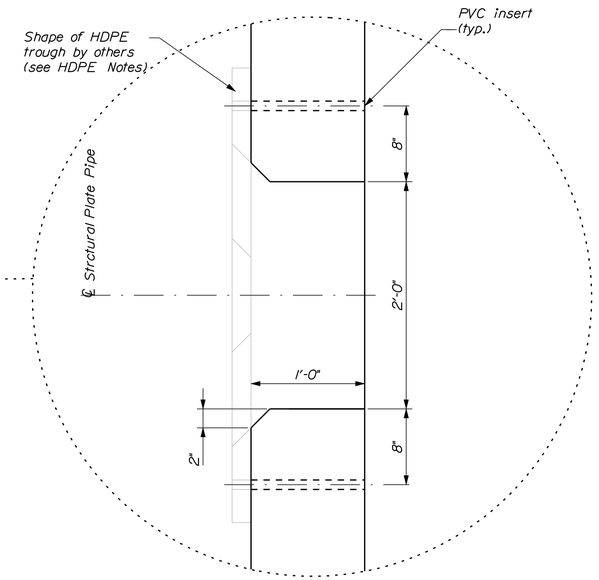

EXTERIOR WEIR TROUGH DETAIL

Typical

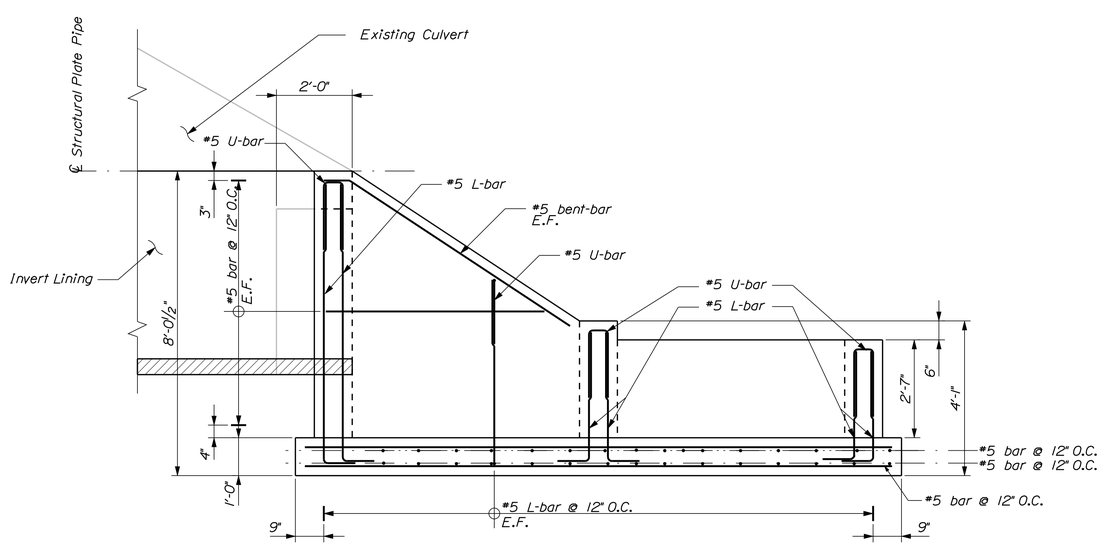

EXTERNAL WIER ELEVATION

West view shown
East view opposite hand

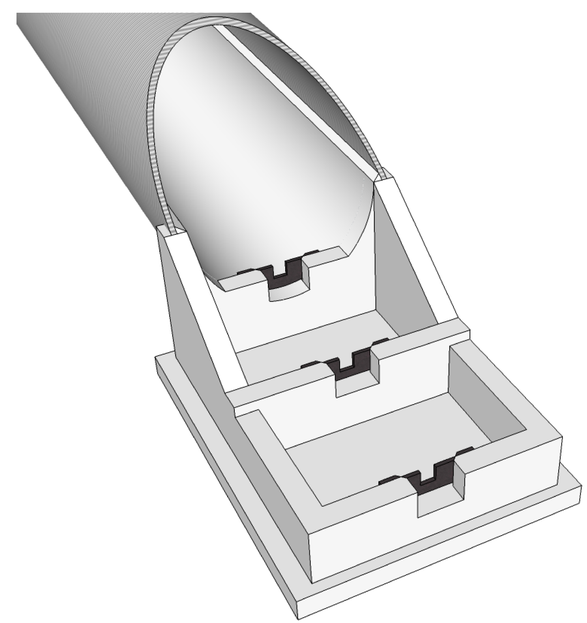

THREE DIMESIONAL IMAGE

STATE OF MAINE
DEPARTMENT OF TRANSPORTATION

16713.00

PIN 16713.00

BRIDGE NO. 5825

BRIDGE PLANS

PROJ. MANAGER	JDW	BY	DATE
DESIGN-DETAILED	JRV	ADN	
CHECKED-REVIEWED			
DESIGN2-DETAILED2			
DESIGN3-DETAILED3			
REVISIONS 1			
REVISIONS 2			
REVISIONS 3			
REVISIONS 4			
FIELD CHANGES			

SIGNATURE

P.E. NUMBER

DATE

KENNEBUNK RIVER BRIDGE
KENNEBUNK RIVER
LYMAN YORK COUNTY

WIER PLAN & ELEVATION

SHEET NUMBER

7

OF 9

Filename: ...\msta\007_Ext_Wier_Pln&Elv.dgn Division: BRIDGE Username: alan.nadeau Date:4/6/2010

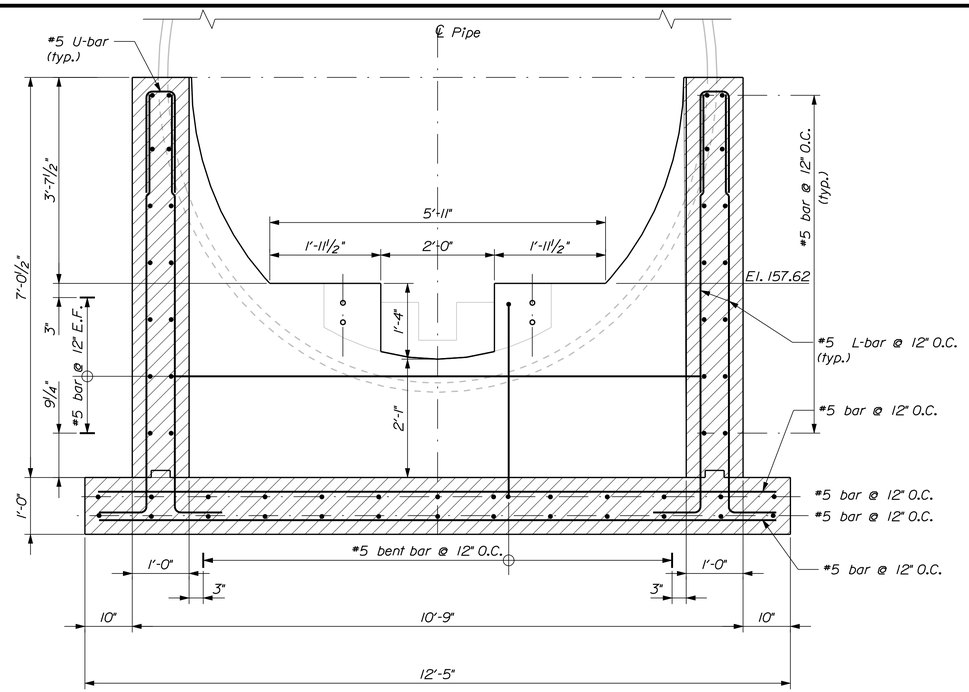

EXTERNAL WEIR NO. 3 ELEVATION

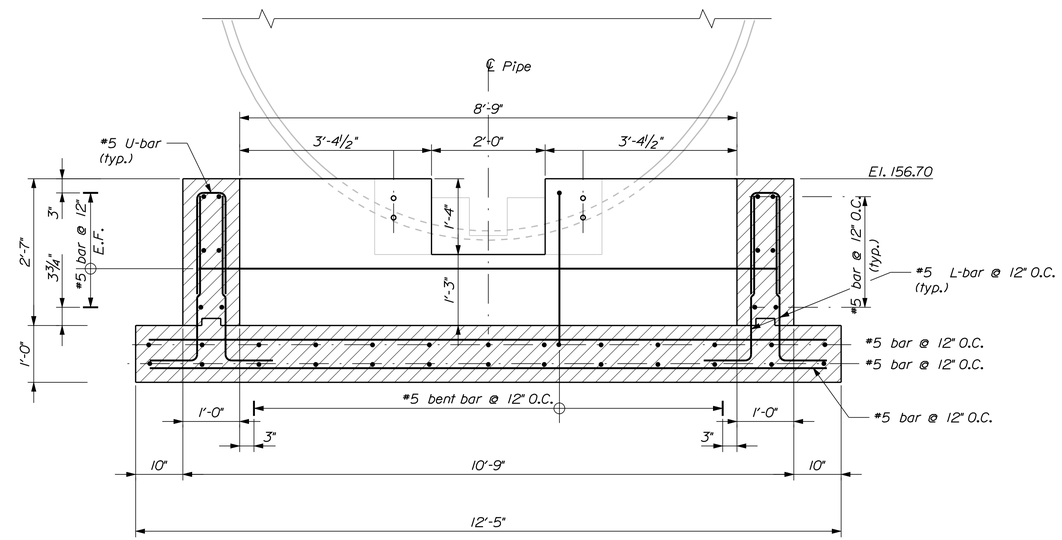

EXTERNAL WEIR NO. 1 ELEVATION

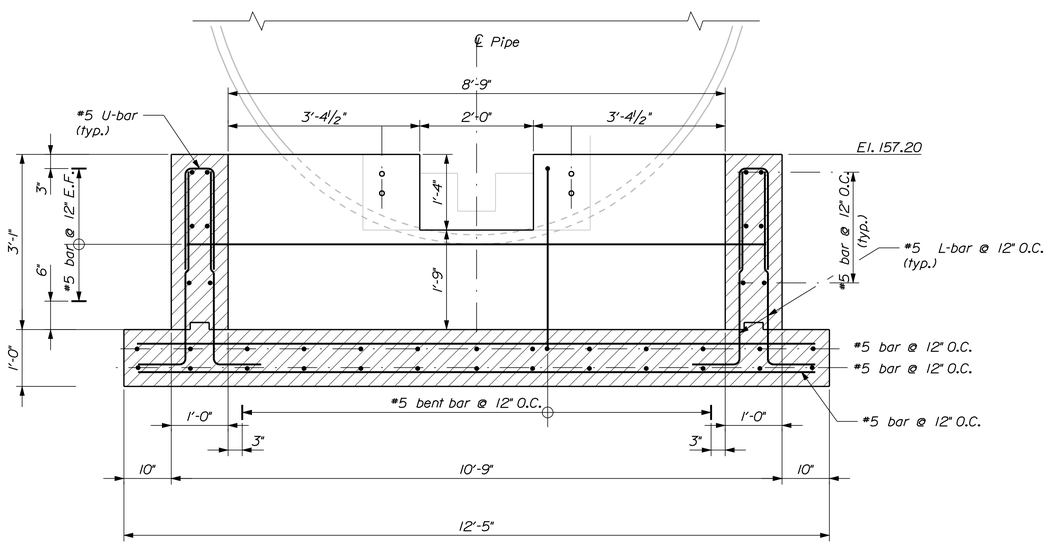

EXTERNAL WEIR NO. 2 ELEVATION

STATE OF MAINE
DEPARTMENT OF TRANSPORTATION

16713.00

PIN 16713.00

BRIDGE NO. 5825

BRIDGE PLANS

		BY	DATE
PROJ. MANAGER	JDW		
DESIGN-DETAILED	JRV	ADN	
CHECKED-REVIEWED	-----	-----	-----
DESIGN2-DETAILED2	-----	-----	-----
DESIGN3-DETAILED3	-----	-----	-----
REVISIONS 1	-----	-----	-----
REVISIONS 2	-----	-----	-----
REVISIONS 3	-----	-----	-----
REVISIONS 4	-----	-----	-----
FIELD CHANGES	-----	-----	-----

SIGNATURE

P.E. NUMBER

DATE

KENNEBUNK RIVER BRIDGE
KENNEBUNK RIVER
LYMAN YORK COUNTY

EXTERIOR WEIR DETAILS

SHEET NUMBER

8

OF 9

Filename: ...\msta\008_External_Wier_Det.dgn Division: BRIDGE Username: alan.nadeau Date:4/6/2010

HORIZONTAL DATUM - US STATE PLANE NAD83(1996)
ZONE - MAINE 2000 WEST ZONE
VERTICAL DATUM - NAVD 88
COMBINED SCALE FACTOR - 0.999765

MAINE 2000 WEST ZONE
GRID 2009

LEO M. RUEL
NANCY P. RUEL
ITEM NO. (1)
CONST. & MAINT. EASE. = 40± S.F. (1)
TEMP. CONST. RIGHTS = 1,105± S.F. (1)
TOTAL AREA = 17± AC. (PER OWNER)

MICHAEL J. VALCOURT
NANCY E. VALCOURT
J. JOHN VALCOURT - LIFE ESTATE
ANNETTE S. VALCOURT - LIFE ESTATE
ITEM NO. (3)
CONST. & MAINT. EASE. = 260± S.F. (1)
TEMP. CONST. RIGHTS = 1,285± S.F. (1)
TOTAL AREA = 136± AC. (PER OWNER)

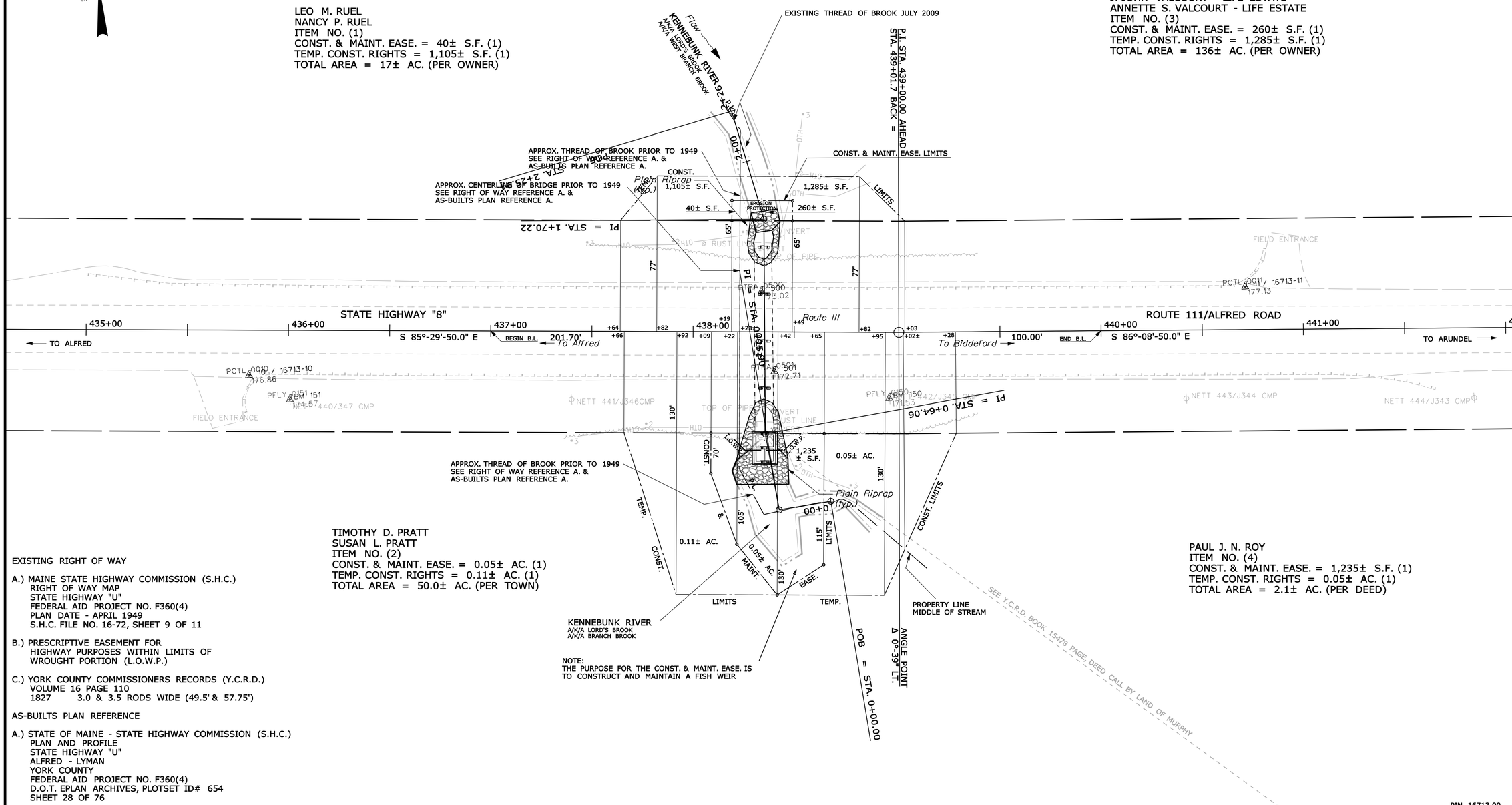

TIMOTHY D. PRATT
SUSAN L. PRATT
ITEM NO. (2)
CONST. & MAINT. EASE. = 0.05± AC. (1)
TEMP. CONST. RIGHTS = 0.11± AC. (1)
TOTAL AREA = 50.0± AC. (PER TOWN)

PAUL J. N. ROY
ITEM NO. (4)
CONST. & MAINT. EASE. = 1,235± S.F. (1)
TEMP. CONST. RIGHTS = 0.05± AC. (1)
TOTAL AREA = 2.1± AC. (PER DEED)

NOTE:
THE PURPOSE FOR THE CONST. & MAINT. EASE. IS
TO CONSTRUCT AND MAINTAIN A FISH WEIR

EXISTING RIGHT OF WAY

A.) MAINE STATE HIGHWAY COMMISSION (S.H.C.)
RIGHT OF WAY MAP
STATE HIGHWAY "U"
FEDERAL AID PROJECT NO. F360(4)
PLAN DATE - APRIL 1949
S.H.C. FILE NO. 16-72, SHEET 9 OF 11

B.) PRESCRIPTIVE EASEMENT FOR
HIGHWAY PURPOSES WITHIN LIMITS OF
WROUGHT PORTION (L.O.W.P.)

C.) YORK COUNTY COMMISSIONERS RECORDS (Y.C.R.D.)
VOLUME 16 PAGE 110
1827 3.0 & 3.5 RODS WIDE (49.5' & 57.75')

AS-BUILTS PLAN REFERENCE

A.) STATE OF MAINE - STATE HIGHWAY COMMISSION (S.H.C.)
PLAN AND PROFILE
STATE HIGHWAY "U"
ALFRED - LYMAN
YORK COUNTY
FEDERAL AID PROJECT NO. F360(4)
D.O.T. EPLAN ARCHIVES, PLOTSET ID# 654
SHEET 28 OF 76

PIN 16713.00

SYMBOLS
- IP or IPF (IRON PIPE or PIN FOUND)
- ST. (SEPTIC TANK)
- (ROW MONUMENT)
- &BM (TRAVERSE POINT)
- WELL
- GROUNDING UNIT LINE
- CONSTRUCTION LIMIT LINE
- PROPERTY LINE
- LIMITS OF WRONGFUL TO RITION (L.O.W.P.)
- EXISTING RIGHT OF WAY
- NEW RIGHT OF WAY
- NEW ROW WITHIN EXIST. ROW
- CONTROL OF ACCESS
- WATER LINE
- GAS LINE
- ELECTRIC LINE
- TELEPHONE LINE
- SEWER LINE

ITEM	TECH	CHECKED
BASE MAP		
EXIST. R/W	G.L.L.	C.W.K.
PROP. LINES	G.L.L.	
AREAS	G.L.L.	J.C.C.

STATE OF MAINE
DEPARTMENT OF TRANSPORTATION
16 STATE HOUSE STATION - AUGUSTA, ME 04333-0016
LYMAN
RIGHT OF WAY MAP

REVISIONS			
NO.	DATE	DESCRIPTION	BY

PLAN FILED IN PLAN BOOK		PAGE	COUNTY RECORD			
NO.	GRANTOR	INSTRUMENT	DATE	BOOK	PAGE

DAVID A. COLE
COMMISSIONER
KENNETH L. SWEENEY
ACTING CHIEF ENGINEER
DATE

STATE OF MAINE
CHRISTOPHER W. KNIGHT 2357
PROFESSIONAL LAND SURVEYOR

STATE HIGHWAY "8"
ROUTE 111\ALFRED ROAD
LYMAN YORK COUNTY
STATE PROJECT NO. 16713.00

JANUARY 2010	RIGHT-OF-WAY MAP	D.O.T. FILE NO. 16-461
SCALE 1" = 25'	SHEET 1 OF 1	

SHEET NUMBER
9
OF 9

Filename: ...\00\ROW\MSTA\001_RWPLAN1.dgn Division: BRIDGE Username: alan.nadeau Date:4/6/2010