STATE OF MAINE
DEPARTMENT OF TRANSPORTATION

SPECIFICATIONS

Design: AASHTO LRFD Bridge Design Specifications, Sixth Edition 2012 and Interim Specifications through 2013.

DESIGN LOADING

Strength I Case Live Load ..... HL - 93 Modified

TRAFFIC DATA

Current (2012) AADT	7040
Future (2032) AADT	8450
DHV - % of AADT	11
Design Hour Volume	930
% Heavy Trucks (AADT)	3
% Heavy Trucks (DHV)	2
Directional Distribution (DHV)	55
18 kip Equivalent P 2.0	63
18 kip Equivalent P 2.5	60
Design Speed (mph)	25

HYDROLOGIC DATA

Drainage Area	207.53 sq mi
Design Discharge (Q50)	4962 cfs
Check Discharge (Q100)	5536 cfs

UTILITIES

Central Maine Power Company
FairPoint Communications
Time Warner Cable
Kennebec Water District
Waterville Sewage District
Summit Gas

MAINTENANCE OF TRAFFIC

Beginning at Abutment #1, the proposed detour is as follows; 0.5 miles on Western Avenue, then 0.35 miles on First Rangeway, then 0.65 miles on Mayflower Avenue, then 0.40 miles on Pleasant Street, then 0.30 miles to the bridge, a total of 2.2 miles. The streets designated in the detour route are all state aid roads. The bridge will also be closed to pedestrian traffic.

MATERIALS

Concrete:	
Curbs & Transition Barriers	Class "LP"
Precast	Class "P"
Fill	"Fill"
All Other	Class "A"
Reinforcing Steel	ASTM A1055/A1055M Grade 60
Reinforcing Strands	AASHTO 203 (ASTM A 416), Grade 270, Low Relaxation

BASIC DESIGN STRESSES

Concrete	f 'c = 4,350 psi
C.I.P. Concrete Abutments	f 'c = 4,350 psi
Precast Concrete NEXT Beams	f y = 10,000 psi f 'ci = 8,000 psi
Reinforcing Steel	F y = 60,000 psi
Prestressing Strand	F μ = 270,000 psi

WATERVILLE
KENNEBEC COUNTY
WESTERN AVENUE BRIDGE
OVER
MESSALONSKEE STREAM
WESTERN AVENUE

FEDERAL AID PROJECT NO. BR-1823(400)X
PROJECT LENGTH 0.041 mi.
BRIDGE REPLACEMENT
BRIDGE NO. 3836

ERDMAN ANTHONY

LIST OF DRAWINGS

Title Sheet	1
Quantities & Notes	2
General Plan	3
Profile	4
Boring Location Plan & Interpretive Profile	5
Boring Logs	6
Typical Sections	7
X-Sections	8-12
Abutment No. 1 Demolition	13
Abutment No. 1 Plan	14
Abutment No. 1 Sections	15
Abutment No. 2 Demolition	16
Abutment No. 2 Plan	17
Abutment No. 2 Sections	18
Retaining Wall Details	19
Superstructure Plan	20
Beam Details	21-24
Reinforcing Steel Schedule	25
Right of Way Map	26
Kennebec Water District Plans	W1-W3
Summit Gas Plans	G1-G7

PROJECT LOCATION:	Western Avenue over Messalonskee Stream Latitude 44°-32'-54", Longitude 69°-33'-33"
PROGRAM AREA:	Bridge Program
OUTLINE OF WORK:	Remove existing superstructure, rehab abutments, construct new 56.5 ft. Precast Next Beam (Type D)

WIN 18234.00

BR-1823(400)X

STATE OF MAINE
DEPARTMENT OF TRANSPORTATION

		DATE
APPROVED		
COMMISSIONER:		10/21/14
CHIEF ENGINEER:		10-20-14

STATE OF MAINE · EDWIN S. ANTHONY No. 7617 · LICENSED PROFESSIONAL ENGINEER

SIGNATURE	7617	
P.E. NUMBER	10/15/2014	
DATE		

PROJECT INFORMATION

PROGRAM	BRIDGE PROGRAM
PROJECT MANAGER	STEPHEN BODGE II
DESIGNER	SAM ANTHONY
CONSULTANT	ERDMAN ANTHONY
PROJECT RESIDENT	
CONTRACTOR	
PROJECT COMPLETION DATE	

WATERVILLE
WESTERN AVENUE BRIDGE

TITLE SHEET

SHEET NUMBER
1
OF 36

Filename: ...\00\Bridge\MSTA\001_Title.dgn Division: BRIDGE Username: Date:10/15/2014

ESTIMATED QUANTITIES			
ITEM NO.	DESCRIPTION	QUANTITY	UNIT
202.10	REMOVING EXISTING SUPERSTRUCTURE - PROPERTY OF CONTRACTOR (150,000 LB)	1	LS
202.17	REMOVING EXISTING STRUCTURAL CONCRETE (43 CY)	1	LS
201.23	REMOVING SINGLE TREE TOP ONLY	2	EA
201.24	REMOVING STUMP	2	EA
203.20	COMMON EXCAVATION	542	CY
203.25	GRANULAR BORROW	193	CY
206.082	STRUCTURAL EARTH EXCAVATION - MAJOR STRUCTURES	378	CY
304.10	AGGREGATE BASE COURSE - GRAVEL	433	CY
403.208	HOT MIX ASPHALT 12.5 MM NOMINAL MAXIMUM SIZE, SURFACE	67	TON
403.209	HOT MIX ASPHALT 9.5 MM HMA (SIDEWALKS, DRIVES, ECT.)	20	TON
403.213	HOT MIX ASPHALT 12.5 MM NOMINAL MAXIMUM SIZE, BASE	100	TON
409.15	BITUMINOUS TACK COAT, APPLIED	25	GAL
502.219	STRUCTURAL CONCRETE ABUTMENTS & RETAINING WALLS (24 CY)	1	LS
502.49	STRUCTURAL CONCRETE CURBS AND SIDEWALKS (20 CY)	1	LS
502.492	STRUCTURAL CONCRETE CURBS AND SIDEWALKS, CLASS A	4	CY
503.22	ZINC-COATED (GALVANIZED) REINFORCING STEEL, FABRICATED & DELIVERED	3100	LB
503.23	ZINC-COATED (GALVANIZED) REINFORCING STEEL, PLACING	3100	LB
507.0821	STEEL BRIDGE RAILING, 3 BAR (50 LF)	1	LS
507.0831	STEEL BRIDGE RAILING, 4 BAR (74 LF)	1	LS
508.13	MEMBRANE WATERPROOFING (40 SY)	1	LS
508.14	HIGH PERFORMANCE WATERPROOFING MEMBRANE (202 SY)	1	LS
512.081	FRENCH DRAINS (104 LF)	1	LS
514.06	CURING BOX FOR CONCRETE CYLINDERS	1	EA
515.21	PROTECTIVE COATING FOR CONCRETE SURFACES (118 SY)	1	LS
518.50	REPAIR OF UPWARD FACING SURFACES - TO REINFORCING STEEL, < 7.9 IN	8	SF
518.60	REPAIR OF VERTICAL SURFACES < 7.9 IN	12	SF
523.52	BEARING INSTALLATION	16	EA
523.5401	LAMINATED ELASTOMERIC BEARINGS, FIXED	8	EA
523.5402	LAMINATED ELASTOMERIC BEARINGS, EXPANSION	8	EA
526.301	TEMPORARY CONCRETE BARRIER, TYPE I (60 LF)	1	LS
526.34	PERMANENT CONCRETE TRANSITION BARRIER	3	EA
535.622	PRESTRESSED CONCRETE NEXT BEAM (241 SY)	1	LS
603.159	12 IN CULVERT PIPE OPTION III	52	LF
603.199	24 IN CULVERT PIPE OPTION III	8	LF
604.15	MANHOLE	1	EA
604.249	CATCH BASIN TYPE F6-C	1	EA
604.252	CATCH BASIN TYPE A5-C	2	EA
606.1721	BRIDGE TRANSITION - TYPE I	2	EA
606.23	GUARDRAIL TYPE 3C - SINGLE RAIL	25	LF
606.35	GUARDRAIL DELINEATOR POST	4	EA
606.79	GUARDRAIL 350 FLARED TERMINAL	2	EA
607.16	CHAIN LINK FENCE - 4'	13	LF
607.21	CHAIN LINK FENCE - 5'	42	LF
609.31	CURB TYPE 3	248	LF
610.08	PLAIN RIPRAP	2	CY
615.07	LOAM	6	CY
618.1301	SEEDING METHOD NUMBER 1, PLAN QUANTITY	1	UN
618.1401	SEEDING METHOD NUMBER 2, PLAN QUANTITY	1	UN
619.1201	MULCH - PLAN QUANTITY	1	UN
619.1401	EROSION CONTROL MIX	6	CY
627.733	WHITE OR YELLOW PAVEMENT MARKING LINE	920	LF
629.05	HAND LABOR, STRAIGHT TIME	20	HR
631.12	ALL-PURPOSE EXCAVATOR (INCLUDING OPERATOR)	8	HR
631.14	GRADER (INCLUDING OPERATOR)	8	HR
631.15	ROLLER, EARTH AND BASE (INCLUDING OPERATOR)	8	HR
631.172	TRUCK-LARGE (INCLUDING OPERATOR)	8	HR
631.32	CULVERT CLEANER (INCLUDING OPERATORS)	8	HR

ESTIMATED QUANTITIES			
ITEM NO.	DESCRIPTION	QUANTITY	UNIT
639.18	FIELD OFFICE, TYPE A	1	EA
645.116	REINSTALL REGULATORY, WARNING, CONFIRMATION, & ROUTE MARKER ASSEMBLY SIGN	1	EA
652.312	TYPE III BARRICADES	12	EA
652.33	DRUM	12	EA
652.34	CONE	25	EA
652.35	CONSTRUCTION SIGNS	221	SF
652.361	MAINTENANCE OF TRAFFIC CONTROL DEVICES (84 CD)	1	LS
652.38	FLAGGERS	100	HR
652.41	PORTABLE CHANGEABLE MESSAGE SIGN	2	EA
653.222	2-1/2 INCH POLYSTYRENE PLASTIC INSULATION	11	SY
656.75	TEMPORARY SOIL EROSION AND POLLUTION CONTROL	1	LS
659.10	MOBILIZATION	1	LS
	KENNEBEC WATER DISTRICT - WATER MAIN		
202.1910	REMOVE ABANDONED WATER LINE (1172 LF)	1	LS
659.10	MOBILIZATION	1	LS
822.3605	12" CL 52 DI PIPE PUSH ON JOINT	140	LF
822.3635	12" CL 56 DI PIPE PUSH ON JOINT - PREINSULATED	72	LF
823.311	12" GATE VALVE WITH BOX	4	EA
825.321	1" CORPORATION	2	EA
825.331	1" CURB STOP	2	EA
825.43	1" COPPER SERVICE	45	LF
827.3219	RESTRAINING EXISTING 24" PUSH ON JOINTS	5	EA
830.15	WATER MAIN BRIDGE CROSS HANGER SYSTEM	1	LS
	SUMMIT NATURAL GAS OF MAINE		
830.161	GAS MAIN BRIDGE CROSSING	1	LS

GENERAL CONSTRUCTION NOTES

1. During construction, the road will be closed to traffic for a time period specified in the Special Provisions.

2. For easements, construction limits and right of way lines, refer to Right of Way Map.

3. The clearing limits as shown on the plans are approximate. The exact limits will be established in the field by the Resident. Payment for clearing will be considered incidental to Contract items.

4. All utility facilities shall be adjusted by the respective utilities unless otherwise noted or as detailed in the plans.

5. See Special Provision 104 for utility installation work.

6. Do not excavate for Aggregate Subbase Course where existing material is suitable as determined by the Resident.

7. In areas where the Resident directs the Contractor not to excavate to the subgrade line shown on the plans, payment for removing existing pavement, grubbing, shaping, ditching, and compacting the existing subbase and layers of new subbase 6 inches or less thick will be made under appropriate equipment rental items.

8. Place loam 2 inches deep on all new or reconstructed sideslopes or as directed by the Resident.

9. Entrances shall be constructed with:
   2" Hot Mix Asphalt -Grading 9.5mm
   12" Aggregate Subbase Course -Gravel

10. Existing culverts to remain shall be cleaned as directed by the Resident. Payment shall be made under Item 631.32 Culvert Cleaner (including operators).

11. Any necessary cutting of existing pipes to fill in areas of proposed catch basins and modifying existing catch basins to fill new pipes shall be paid for separately and shall be considered incidental to 604 pay items.

12. Erosion Control Mix may be substituted in those areas normally receiving loam and seed as directed by the Resident. Placement shall be in accordance with Standard Specifications Section 619, Mulch. Payment will be made under Item No. 619.1401, Erosion Control Mix.

13. An NCHRP350 compliant guardrail end treatment shall be installed concurrently with the placement of each section of beam guardrail.

14. All existing guardrail shall be removed and become the property of the Contractor. Removal and disposal shall be considered incidental to the guardrail items.

GENERAL CONSTRUCTION NOTES CONT.

15. Extended-use Erosion Control Blanket, seeded gutters, riprap downspouts, and other gutters lined with Stone Ditch Protection shall be constructed after paving and shoulder work is completed, where it is apparent that runoff will cause continual erosion. Payment will be made under the appropriate Contract items.

16. Protective Coating for Concrete Surfaces shall be applied to the following areas:

   All exposed surfaces of concrete curbs and sidewalks.
   Fascias down to the NEXT Beams.
   All exposed surfaces of Concrete Transition Barriers.

17. Bidders and Contractors shall note that existing bridge plans may be accessed at the web address below. The plans are reproductions of the original drawings as prepared for the construction of the bridges. It is very unlikely that the plans will show any construction field changes or any alterations, which may have been made to the bridge. http://www.maine.gov/mdot/comprehensive-list-projects/project-information.php

18. Project information referred to below may be accessed at the following MaineDOT web address: http://www.maine.gov/mdot/contractors

19. The hydrologic report of the bridge site may be accessed at the MaineDOT web address. The hydrologic report is based on MaineDOT's interpretation of the information obtained for the subject site. No assurance is given that the information or the conclusions of the report will be representative of actual conditions at the time of construction.

20. The Project geotechnical report titled: Preliminary Geotechnical Design Report, Western Avenue over Messalonskee Stream, MaineDOT WIN 18234.00, Waterville, Maine, dated November 30, 2012 may be accessed at the MaineDOT web address.

21. Geotechnical information furnished or referred to in this plan set is for the use of the Bidders and the Contractor. No assurance is given that the information or interpretations will be representative of actual subsurface conditions at the construction site. MaineDOT will not be responsible for the Bidders' or Contractor's interpretations of, or conclusions drawn from, the geotechnical information. The boring logs contained in the plan set present factual and interpretive subsurface information collected at discrete locations. Data provided may not be representative of the subsurface conditions between the boring locations.

22. Quantities included for pay items measured and paid for by Lump Sum are estimated quantities and are provided by MaineDOT for informational purposes only. Lump Sum pay items will be paid for at the Contract Bid amount, with no addition or reduction in payment to the Contractor if the actual final quantities are different from the MaineDOT provided estimated quantities, except as follows:

   a. If a Lump Sum pay item is eliminated, the requirements of Standard Specifications Section 109.2, Elimination of Items, will take precedence.

   b. If other Contract Documents specifically allow a change in payment for a Lump Sum pay item, those requirements will be followed.

   c. If a design change results in changes to estimated quantities for Lump Sum pay items, price adjustments will be made in accordance with Standard Specifications Section 109.7, Equitable Adjustments to Compensation.

23. The Contractor shall submit a Bridge Demolition Plan to the Resident at least 10 business days prior to the start of demolition work. The plan shall outline the methods and equipment to be used to remove and dispose of all materials included in the existing bridge. No work related to the removal of the bridge shall be undertaken by the Contractor until MaineDOT has reviewed the Bridge Demolition Plan for appropriateness and completeness. Payment for all work necessary for developing, submitting and finalizing the Demolition Plan will be considered incidental to the bridge removal pay item.

24. The existing bridge shall be removed by and become the property of the Contractor. The steel portions of the existing bridge are assumed to be coated with a lead-based paint system. The Contractor is responsible for the containment, proper management and disposal of all lead-contaminated hazardous waste generated by the process of demolishing the bridge. The Contractor is responsible for implementing appropriate OSHA mandated personal protection standards related to this process. Once the existing bridge is removed, the Contractor is solely responsible for the care, custody and control of the components of the existing bridge and any hazardous waste generated as a result of the storage, recycling or disposal of the bridge components, including lead-coated steel. The Contractor shall recycle or reuse the steel in accordance with the Maine Department of Environmental Protection's "Maine Hazardous Waste Management Regulations," Chapter 850. A copy of this regulation is available at MaineDOT's offices on Child Street in Augusta. Payment for all labor, materials, equipment and other costs required to remove and dispose of the existing bridge will be considered incidental to the bridge removal pay item.

ERDMAN ANTHONY

STATE OF MAINE
DEPARTMENT OF TRANSPORTATION

BR-1823(400)X

WIN 18234.00

BRIDGE NO. 3836

BRIDGE PLANS

PROJ. MANAGER	STEPHEN BORGE II	BY	DATE
DESIGN-DETAILED	C. SICHAK	T. LINDO	10/2014
CHECKED-REVIEWED	F. DAHAR		
DESIGN2-DETAILED2			
DESIGN3-DETAILED3			
REVISIONS 1			
REVISIONS 2			
REVISIONS 3			
REVISIONS 4			
FIELD CHANGES			

SIGNATURE

P.E. NUMBER

DATE

WESTERN AVENUE BRIDGE
MESSALONSKEE STREAM
WATERVILLE KENNEBEC COUNTY

ESTIMATED QUANTITIES
& GENERAL CONSTRUCTION NOTES

SHEET NUMBER
2
OF 36

Filename: ...\MSTA\002_Quantities-Notes.dgn Division: BRIDGE Username: Date:10/16/2014

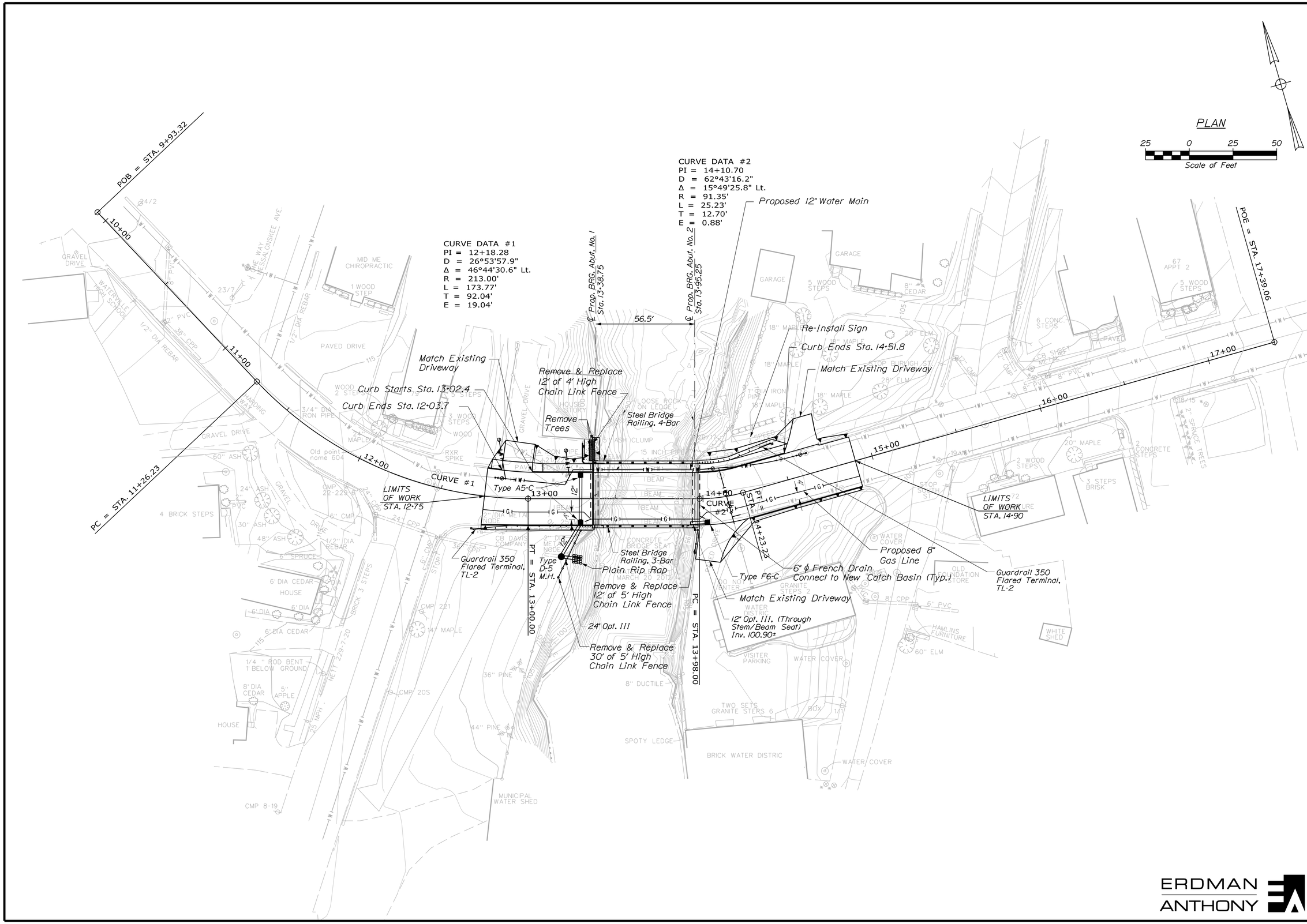

ERDMAN ANTHONY

STATE OF MAINE
DEPARTMENT OF TRANSPORTATION

BR-1823(400)X

WIN 18234.00

BRIDGE NO. 3836

BRIDGE PLANS

PROJ. MANAGER STEPHEN BODGE II	BY	DATE
DESIGN-DETAILED	C. SCHAK	10/2014
CHECKED-REVIEWED	T. LINDO	
DESIGN2-DETAILED2	F. DAHAR	
DESIGN3-DETAILED3		
REVISIONS 1		
REVISIONS 2		
REVISIONS 3		
REVISIONS 4		
FIELD CHANGES		

SIGNATURE

P.E. NUMBER

DATE

WESTERN AVENUE BRIDGE
MESSALONSKEE STREAM
WATERVILLE KENNEBEC COUNTY

GENERAL PLAN

SHEET NUMBER

3

OF 36

Filename: ...\00\Bridge\MSTA\003_BOPlan1.dgn Division: BRIDGE Username: Date:10/15/2014

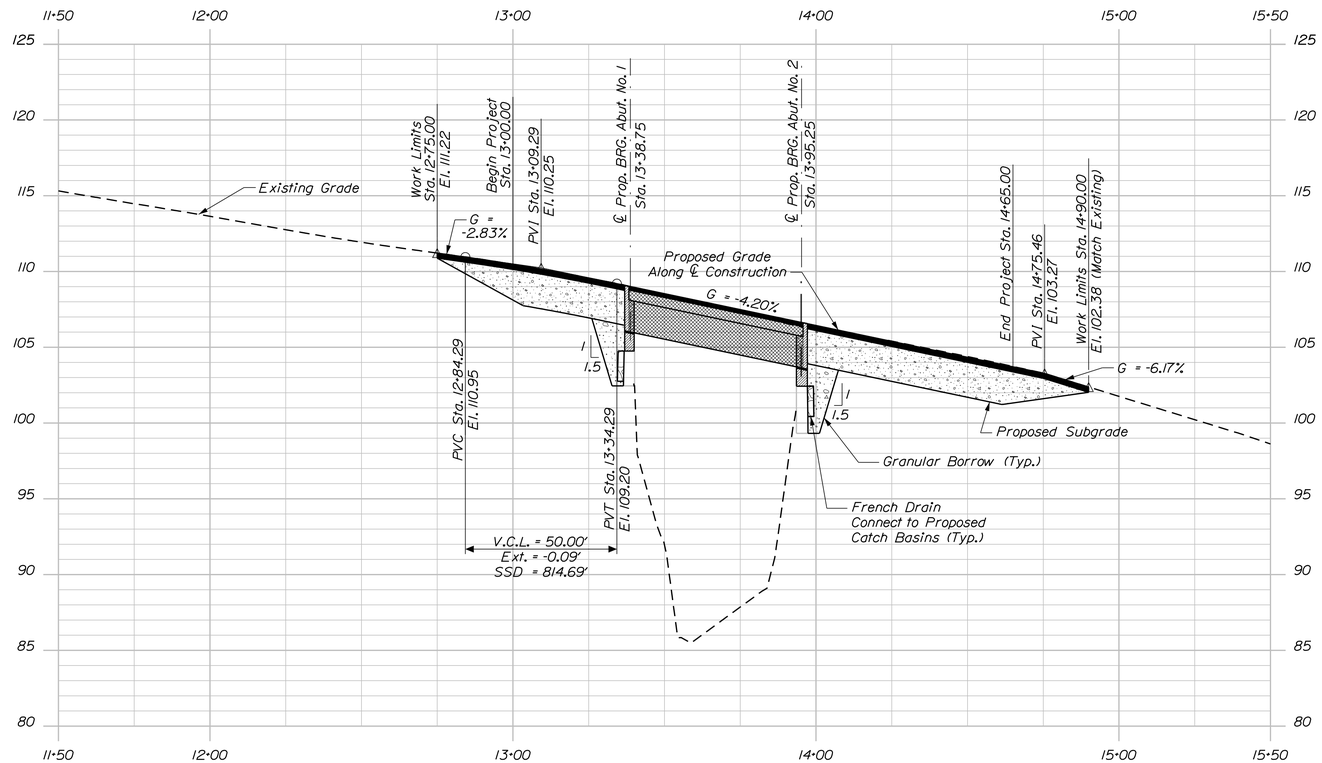

PROFILE

HOR. 25 0 25 50

VER. 5 0 5 10

Scale

ERDMAN ANTHONY

STATE OF MAINE
DEPARTMENT OF TRANSPORTATION

BR-1823(400)X

WIN 18234.00

BRIDGE NO. 3836

BRIDGE PLANS

PROJ. MANAGER STEPHEN BOGGE II	BY	DATE	
DESIGN-DETAILED	C. SICHAK	T. LINDO	10/2014
CHECKED-REVIEWED	F. DAHAR		
DESIGN2-DETAILED2			
DESIGN3-DETAILED3			
REVISIONS 1			
REVISIONS 2			
REVISIONS 3			
REVISIONS 4			
FIELD CHANGES			

SIGNATURE

P.E. NUMBER

DATE

WESTERN AVENUE BRIDGE
MESSALONSKEE STREAM
WATERVILLE KENNEBEC COUNTY

PROFILE

SHEET NUMBER

4

OF 36

Filename: ...\00\Bridge\MSTA\004_Profile.dgn Division: BRIDGE Username: Date:10/15/2014

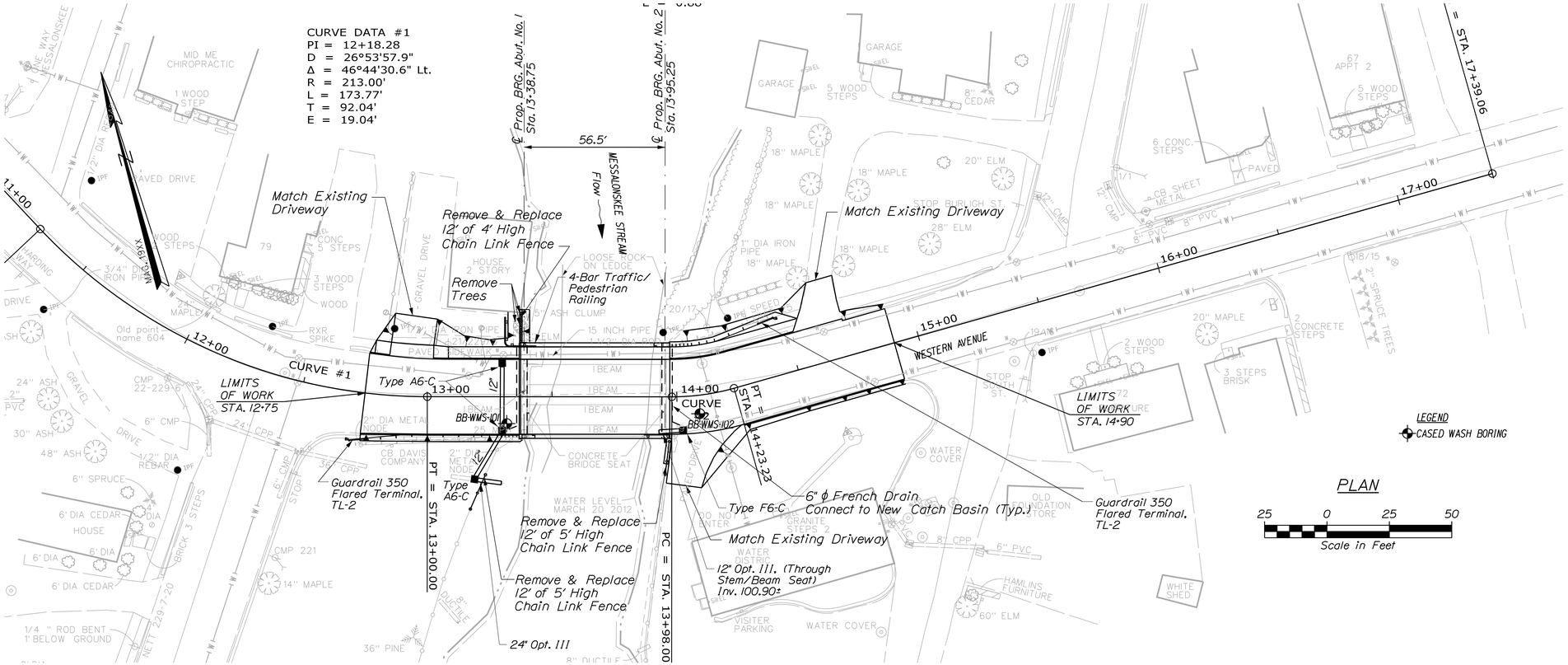

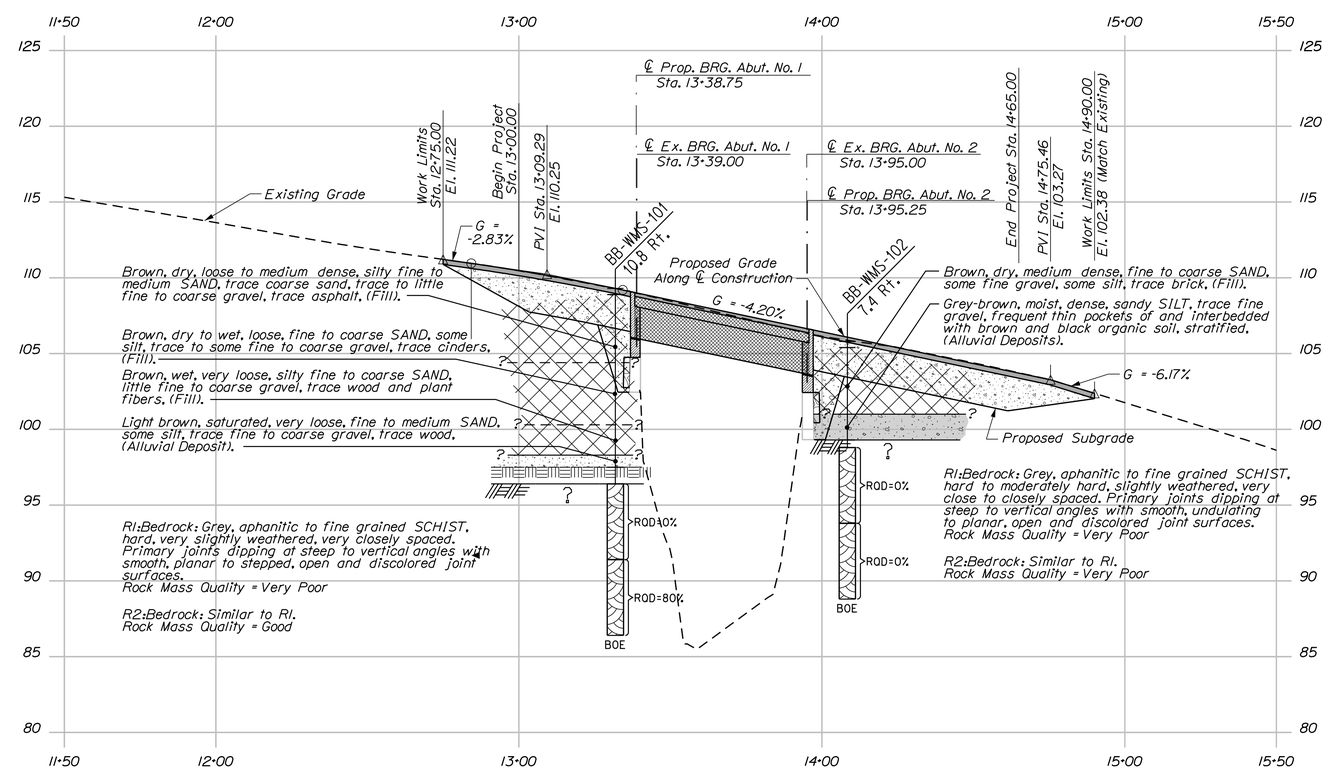

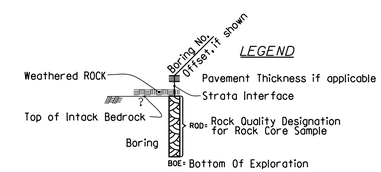

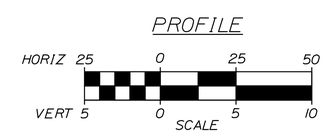

Note: This generalized interpretive soil profile is intended to convey trends in subsurface conditions. The boundaries between strata are approximate and idealized, and have been developed by interpretations of widely spaced explorations and samples. Actual soil transitions may vary and are probably more erratic. For more specific information refer to the exploration logs.

STATE OF MAINE
DEPARTMENT OF TRANSPORTATION

BH-1823(400)X

WIN 18234.00

BRIDGE NO. 3836

BRIDGE PLANS

	BY	DATE
PROJ. MANAGER		
DESIGN-DETAILED		
CHECKED-REVIEWED		
DESIGN2-DETAILED2	L. KRUSINSKI	AUG 2012
DESIGN3-DETAILED3	T. WHITE	
REVISIONS 1		
REVISIONS 2		
REVISIONS 3		
REVISIONS 4		
FIELD CHANGES		

SIGNATURE

P.E. NUMBER

DATE

WESTERN AVENUE BRIDGE
MESSALONSKEE STREAM
WATERVILLE KENNEBEC COUNTY

BORING LOCATION PLAN & INTERPRETIVE SUBSURFACE PROFILE

SHEET NUMBER

5

OF 36

Filename: ...\Boring Plans\005_BLP&ISP1.dgn Division: BRIDGE Username: Date:9/19/2014

Maine Department of Transportation

Soil/Rock Exploration Log
US CUSTOMARY UNITS

Project: Western Avenue over Messalonskee Stream
Location: Waterville, Maine

Boring No.: BB-WMS-101
WIN: 18234.00

Driller:	MaineDOT	Elevation (ft.)	109.3	Auger ID/OD:	--
Operator:	E. Giguere	Datum:	NAVD 88	Sampler:	Split spoon - 1.375 in. ID
Logged By:	B. Babcock	Rig Type:	CME 45 Skid on Truck	Hammer Wt./Fall:	NW-S 140#/30 in.
Date Start/Finish:	07-18-2012/07-18-2012	Drilling Method:	Cased Wash Boring	Core Barrel:	NQ - 2.0 in. ID
Boring Location:	13+31.9, 10.8 ft Rt.	Casing ID/OD:	NW - 3.0 in. ID	Water Level*:	9.6
Hammer Efficiency Factor: 0.84		Hammer Type:	Automatic ☒ Hydraulic ☐ Rope & Cathead ☐		

Definitions:
D = Split Spoon Sample
MD = Unsuccessful Split Spoon Sample attempt
U = Thin Wall Tube Sample
MU = Unsuccessful Thin Wall Tube Sample attempt
V = Insitu Vane Shear Test, PP = Pocket Penetrometer
MV = Unsuccessful Insitu Vane Shear Test attempt
R = Rock Core Sample
SSA = Solid Stem Auger
HSA = Hollow Stem Auger
RC = Roller Cone
WOH = weight of 140lb. hammer
WOR/C = weight of rods or casing
WO1P = Weight of one person
S_u = Insitu Field Vane Shear Strength (psf)
T_v = Pocket Torvane Shear Strength (psf)
q_p = Unconfined Compressive Strength (ksf)
N-uncorrected = Raw field SPT N-value
Hammer Efficiency Factor = Annual Calibration Value
N_{60} = SPT N-uncorrected corrected for hammer efficiency
N_{60} = (Hammer Efficiency Factor/60%)*N-uncorrected
$S_{u(lab)}$ = Lab Vane Shear Strength (psf)
WC = water content, percent
LL = Liquid Limit
PL = Plastic Limit
PI = Plasticity Index
G = Grain Size Analysis
C = Consolidation Test

Depth (ft.)	Sample No.	Pen./Rec. (in.)	Sample Depth (ft.)	Blows (/6 in. Shear Strength (psf) or RQD (%)	N-uncorrected	N_{60}	Casing Blows	Elevation (ft.)	Visual Description and Remarks	Laboratory Testing Results/ AASHTO and Unified Class
0							HSA	108.90	-BITUMINOUS CONCRETE- 0.40	
	1D	24/18	1.00 - 3.00	11/9/7/6	16	22			Brown, dry, medium dense, silty fine to medium SAND, trace coarse sand, trace fine to coarse gravel, trace asphalt -FILL-(SC-SM)	G#244214 A-4, SC-SM WC=3.9%
	2D	24/14	3.00 - 5.00	4/4/5/5	9	13			Brown, dry, loose, silty fine to medium SAND, little fine to coarse gravel, trace coarse sand -FILL-(SC-SM)	G#244215 A-4, SC-SM WC=3.8%
5	3D	24/12	5.00 - 7.00	4/4/4/4	8	11	5		Brown, dry, loose, fine to medium SAND, some silt, trace fine to coarse gravel -FILL-(SC-SM)	G#244216 A-2-4, SC-SM WC=5.0%
							16			
	4D	24/5	7.00 - 9.00	8/4/1/1	5	7	13		Brown, wet, loose, fine to coarse SAND, some silt, some fine gravel, trace cinders -FILL-(SC-SM)	G#244217 A-2-4, SC-SM WC=14.6%
							6			
	5D	24/6	9.00 - 11.00	2/1/1/1	2	3	5	100.30	Brown, wet, very loose, silty fine to coarse SAND, little fine to coarse gravel, trace wood and plant fibers -FILL-(SC-SM) 9.00	G#244218 A-4, SC-SM WC=21.7 Non-Plastic
10							4			
	6D	10/5	11.00 - 11.83	4/100(3.0")			4	98.30	Light brown, saturated, very loose, fine to medium SAND, some silt, trace fine to coarse gravel, trace wood -ALLUVIAL DEPOSIT-(SC-SM) 11.00	G#244219 A-2-4, SC-SM WC=16.2%
	R1	60/60	12.90 - 17.90	RQD = 0%			6	97.50		
								96.40	-PROBABLE WEATHERED BEDROCK- 11.80	
							16		Top of Bedrock at Elev. 96.4 ft Gray, aphanitic to fine grained SCHIST. Hard, very slightly weathered. Primary joints dipping at steep to vertical angles, close, smooth, planar to stepped, discolored, open. Rock Mass Quality=Very Poor -WATERVILLE FORMATION- R1 Core Times (min:sec): 12.9-13.9' (2:10); 13.9-14.9' (2:08); 14.9-15.9' (1:55); 15.9-16.9' (2:22); 16.9-17.9' (3:28) 12.90	
15										
	R2	60/60	17.90 - 22.90	RQD = 80%					Gray, aphanitic to fine grained SCHIST. Hard, very slightly weathered. Primary joints dipping at steep to vertical angles, moderately close, smooth, planar, discolored, open. Rock Mass Quality=Good -WATERVILLE FORMATION- R2 Core Times (min:sec): 17.9-18.9' (1:22); 18.9-19.9' (2:01); 19.9-20.9' (2:08); 20.9-21.9' (2:43); 21.9-22.9' (2:18)	GTX#12141 qp=5,120 psi GTX#12141 qp=8,977 psi
20								86.40	Bottom of Exploration at 22.90 feet below ground surface. 22.90	
25										

Remarks:

Stratification lines represent approximate boundaries between soil types; transitions may be gradual.

* Water level readings have been made at times and under conditions stated. Groundwater fluctuations may occur due to conditions other than those present at the time measurements were made.

Page 1 of 1

Boring No.: BB-WMS-101

Maine Department of Transportation

Soil/Rock Exploration Log
US CUSTOMARY UNITS

Project: Western Avenue over Messalonskee Stream
Location: Waterville, Maine

Boring No.: BB-WMS-102
WIN: 18234.00

Driller:	MaineDOT	Elevation (ft.)	105.8	Auger ID/OD:	--
Operator:	E. Giguere	Datum:	NAVD 88	Sampler:	Split spoon - 1.375 in. ID
Logged By:	B. Babcock	Rig Type:	CME 45 Skid on Truck	Hammer Wt./Fall:	NW-S 140#/30 in.
Date Start/Finish:	07-18-2012/07-18-2012	Drilling Method:	Cased Wash Boring	Core Barrel:	NQ - 2.0 in. ID
Boring Location:	14+08.4, 7.4 ft Rt.	Casing ID/OD:	NW - 3.0 in. ID	Water Level*:	Not Measured
Hammer Efficiency Factor: 0.84		Hammer Type:	Automatic ☒ Hydraulic ☐ Rope & Cathead ☐		

Definitions:
D = Split Spoon Sample
MD = Unsuccessful Split Spoon Sample attempt
U = Thin Wall Tube Sample
MU = Unsuccessful Thin Wall Tube Sample attempt
V = Insitu Vane Shear Test, PP = Pocket Penetrometer
MV = Unsuccessful Insitu Vane Shear Test attempt
R = Rock Core Sample
SSA = Solid Stem Auger
HSA = Hollow Stem Auger
RC = Roller Cone
WOH = weight of 140lb. hammer
WOR/C = weight of rods or casing
WO1P = Weight of one person
S_u = Insitu Field Vane Shear Strength (psf)
T_v = Pocket Torvane Shear Strength (psf)
q_p = Unconfined Compressive Strength (ksf)
N-uncorrected = Raw field SPT N-value
Hammer Efficiency Factor = Annual Calibration Value
N_{60} = SPT N-uncorrected corrected for hammer efficiency
N_{60} = (Hammer Efficiency Factor/60%)*N-uncorrected
$S_{u(lab)}$ = Lab Vane Shear Strength (psf)
WC = water content, percent
LL = Liquid Limit
PL = Plastic Limit
PI = Plasticity Index
G = Grain Size Analysis
C = Consolidation Test

Depth (ft.)	Sample No.	Pen./Rec. (in.)	Sample Depth (ft.)	Blows (/6 in. Shear Strength (psf) or RQD (%)	N-uncorrected	N_{60}	Casing Blows	Elevation (ft.)	Visual Description and Remarks	Laboratory Testing Results/ AASHTO and Unified Class
0							HSA	105.40	-BITUMINOUS CONCRETE- 0.40	
	1D	24/16	1.00 - 3.00	6/10/12/11	22	31			Brown, dry, medium dense, fine to coarse SAND, some fine gravel, some silt, trace brick -FILL-(SC-SM)	G#244220 A-2-4, SC-SM WC=7.1%
	2D	24/6	3.00 - 5.00	9/11/13/14	24	34			Brown, dry, medium dense, fine to coarse SAND, some fine gravel, some silt -FILL-(SC-SM)	G#244221 A-2-4, SC-SM WC=5.1%
5	3D	18/18	5.00 - 6.50	3/3/45/100(0.0")	48	67	7	100.80	Gray-brown, moist, dense, sandy SILT, trace fine gravel, frequent thin pockets of brown and black organic soil, stratified -ALLUVIAL DEPOSIT-(ML) 5.00	G#244222 A-4, ML WC=17.7%
							24	99.80 99.30		
	R1	60/57	7.00 - 12.00	RQD = 0%					Gray-brown, moist, dense, SILT, little fine sand, trace medium and coarse sand, trace fine gravel, interbedded with brown and black organic-like soil, stratified, weathered bedrock in tip of spoon -ALLUVIAL DEPOSIT-(ML) 6.00	Non-Plastic G#244223 A-4, ML WC=47.4%
10									Top of Bedrock at Elev. 99.3 ft. Gray, aphanitic to fine grained SCHIST. Hard to moderately hard, slightly weathered. Primary joints dipping at steep to vertical angles, very close to close, smooth, undulating to planar, discolored, open. Rock Mass Quality=Very Poor -WATERVILLE FORMATION- R1 Core Times (min:sec): 7.0-8.0' (2:08); 8.0-9.0' (1:42); 9.0-10.0' (1:35); 10.0-11.0' (1:44); 11.0-12.0' (1:55) 6.50	
	R2	60/60	12.00 - 17.00	RQD = 0%					Gray, aphanitic to fine grained SCHIST. Hard to moderately hard, slightly weathered. Primary joints dipping at steep to vertical angles, very close, smooth, undulating to planar, discolored, open. Rock Mass Quality=Very Poor -WATERVILLE FORMATION- R2 Core Times (min:sec): 12.0-13.0' (2:15); 13.0-14.0' (2:29); 14.0-15.0' (2:13); 15.0-16.0' (1:50); 16.0-17.0' (1:56)	
15								88.80	Bottom of Exploration at 17.00 feet below ground surface. 17.00	
20										
25										

Remarks:

Stratification lines represent approximate boundaries between soil types; transitions may be gradual.

* Water level readings have been made at times and under conditions stated. Groundwater fluctuations may occur due to conditions other than those present at the time measurements were made.

Page 1 of 1

Boring No.: BB-WMS-102

STATE OF MAINE
DEPARTMENT OF TRANSPORTATION

BH-1823(400)X

WIN 18234.00

BRIDGE NO. 3836

BRIDGE PLANS

	BY	DATE
PROJ. MANAGER		
DESIGN-DETAILED		
CHECKED-REVIEWED		
DESIGN2-DETAILED2	L.KRUSINSKI	JUL 2014
DESIGN3-DETAILED3		
REVISIONS 1		
REVISIONS 2		
REVISIONS 3		
REVISIONS 4		
FIELD CHANGES		

SIGNATURE
P.E. NUMBER
DATE

WESTERN AVENUE BRIDGE
MESSALONSKEE STREAM
WATERVILLE KENNEBEC COUNTY

BORING LOGS

SHEET NUMBER
6
OF 36

Filename: ...\006_BORING LOGS1.dgn Division: BRIDGE Username: Date:9/19/2014

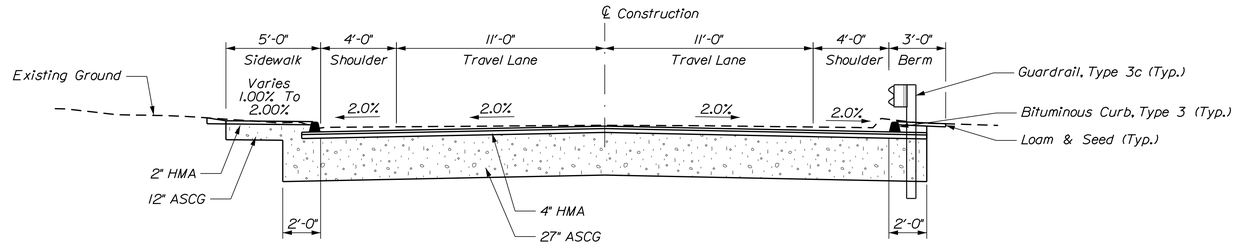

APPROACH TYPICAL SECTION

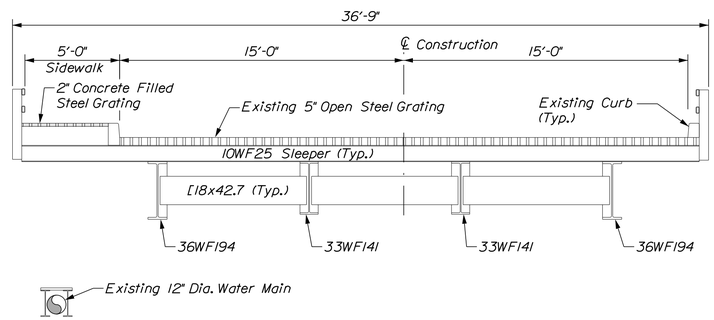

EXISTING BRIDGE SECTION

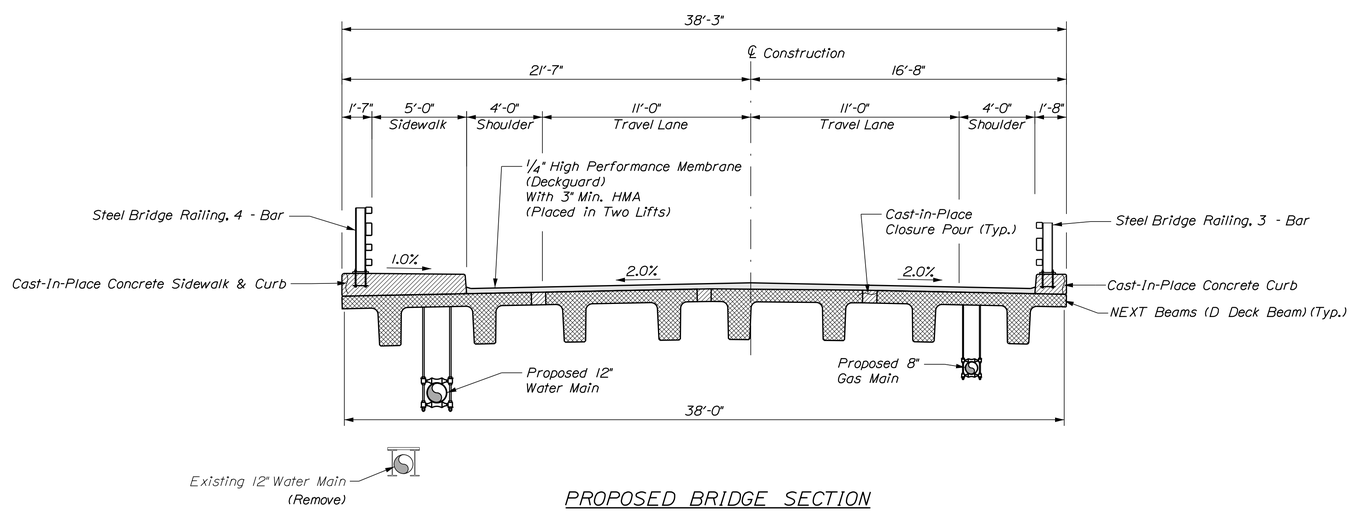

PROPOSED BRIDGE SECTION

ERDMAN ANTHONY

STATE OF MAINE
DEPARTMENT OF TRANSPORTATION

BR-1823(400)X

WIN 18234.00

BRIDGE NO. 3836

BRIDGE PLANS

PROJ. MANAGER	STEPHEN BODGE II	BY	DATE
DESIGN-DETAILED	C. SICHAK	T. LINDO	10/2014
CHECKED-REVIEWED	F. DAHAR		
DESIGN2-DETAILED2			
DESIGN3-DETAILED3			
REVISIONS 1			
REVISIONS 2			
REVISIONS 3			
REVISIONS 4			
FIELD CHANGES			

SIGNATURE

P.E. NUMBER

DATE

WESTERN AVENUE BRIDGE
MESSALONSKEE STREAM
WATERVILLE KENNEBEC COUNTY

TYPICAL SECTIONS

SHEET NUMBER

7

OF 36

Filename: ...\Bridge\MSTA\007_Btypical.dgn Division: BRIDGE Username: Date:10/15/2014

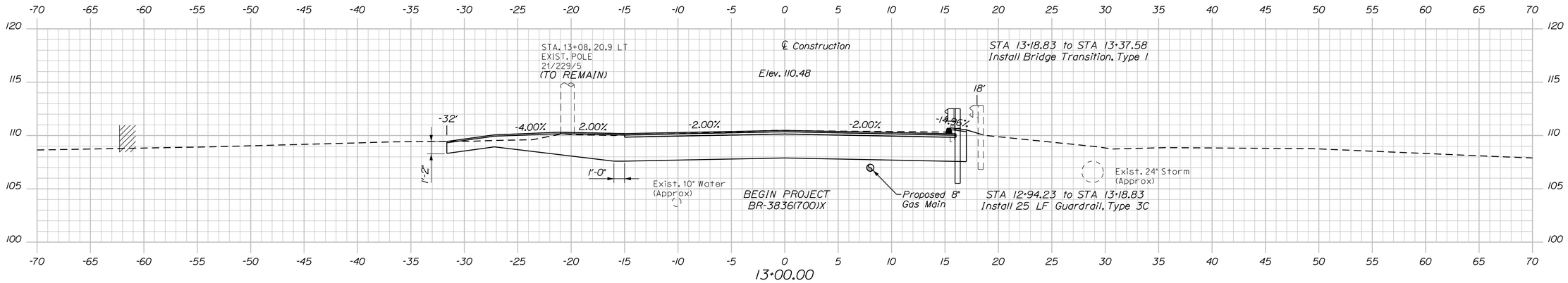

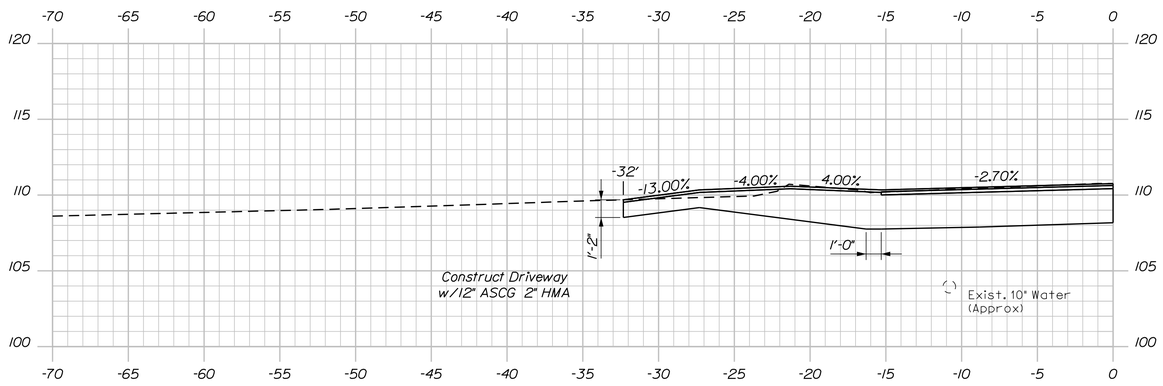

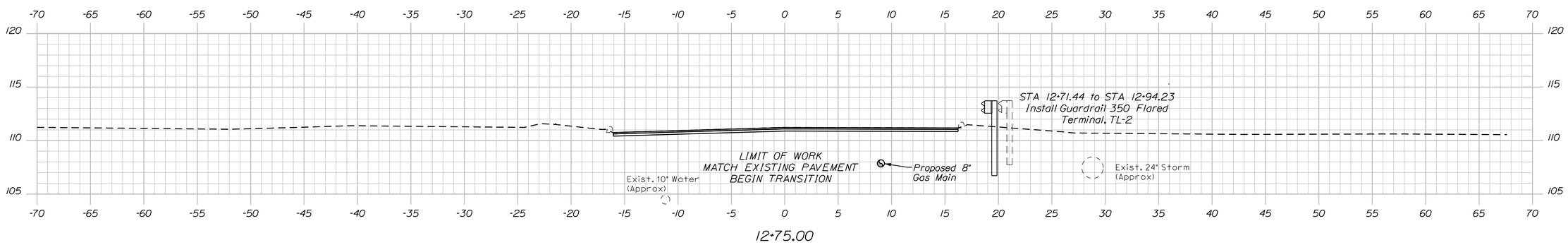

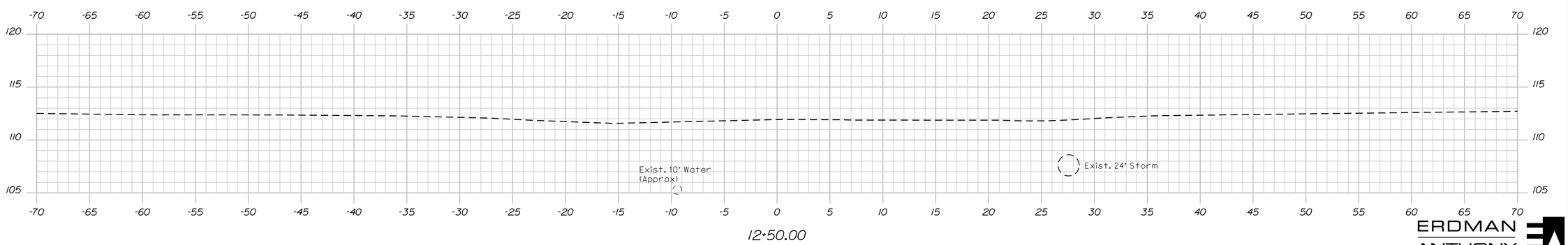

ERDMAN ANTHONY

STATE OF MAINE
DEPARTMENT OF TRANSPORTATION

BR-1823(400)X

WIN 18234.00

BRIDGE NO. 3836

BRIDGE PLANS

	BY	DATE
PROJ. MANAGER STEPHEN BODGE II		
DESIGN-DETAILED C. SICHAK	T. LINDO	10/2014
CHECKED-REVIEWED F. DAHAR		
DESIGN2-DETAILED2		
DESIGN3-DETAILED3		
REVISIONS 1		
REVISIONS 2		
REVISIONS 3		
REVISIONS 4		
FIELD CHANGES		

SIGNATURE

P.E. NUMBER

DATE

WESTERN AVENUE BRIDGE
MESSALONSKEE STREAM
WATERVILLE KENNEBEC COUNTY

CROSS SECTIONS

SHEET NUMBER

8

OF 36

Sta. 12+50.00 to Sta. 13+00.00

Filename: ...\00\Bridge\MSTA\008_Xsect.dgn Division: BRIDGE Username: Date:10/15/2014

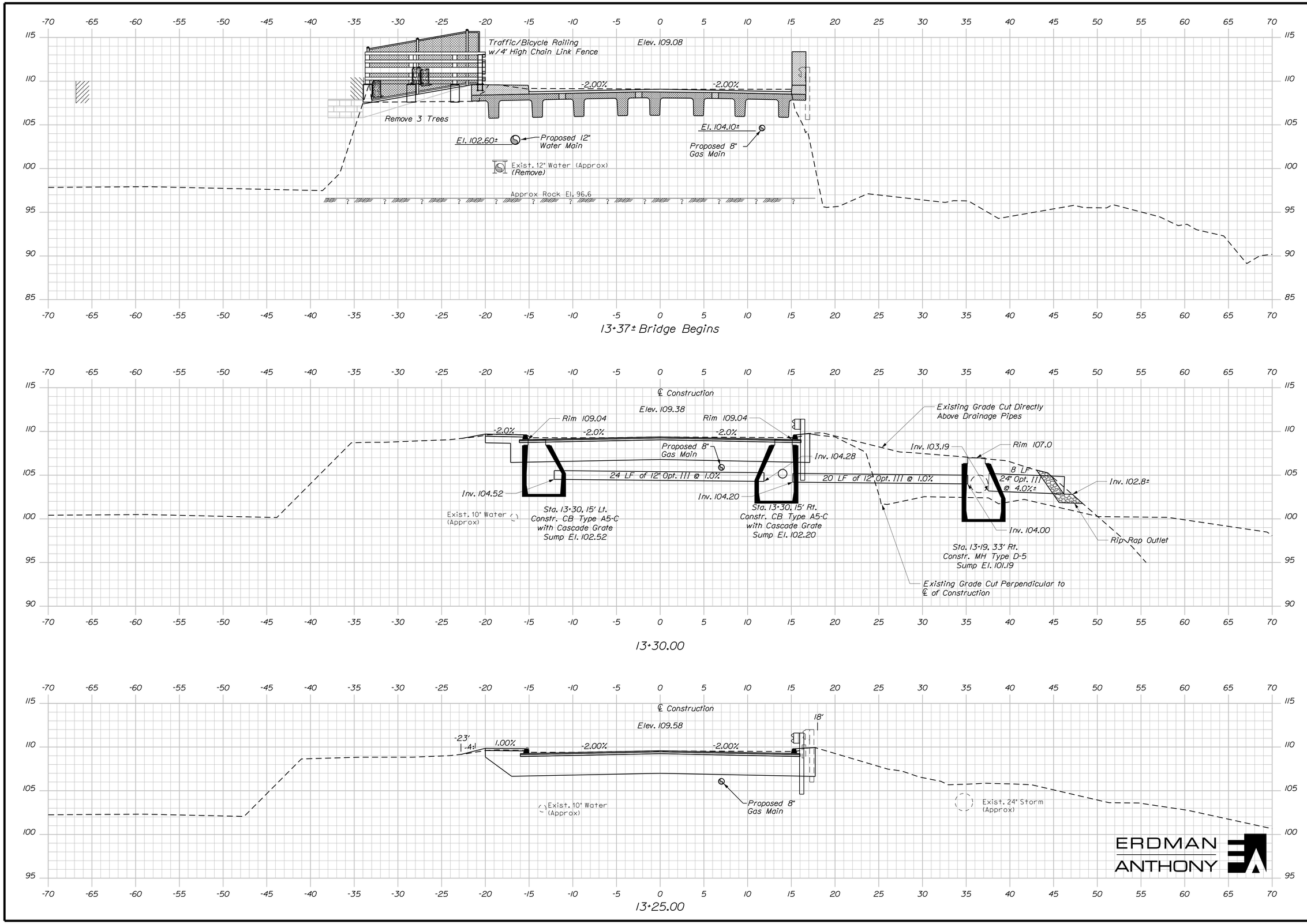

ERDMAN ANTHONY

STATE OF MAINE
DEPARTMENT OF TRANSPORTATION

BR-1823(400)X

WIN 18234.00

BRIDGE NO. 3836

BRIDGE PLANS

PROJ. MANAGER	STEPHEN BIDGE II	BY	DATE
DESIGN-DETAILED	C. SCHAK	T. LINDO	10/2014
CHECKED-REVIEWED	F. DAHAR		
DESIGN2-DETAILED2			
DESIGN3-DETAILED3			
REVISIONS 1			
REVISIONS 2			
REVISIONS 3			
REVISIONS 4			
FIELD CHANGES			

SIGNATURE

P.E. NUMBER

DATE

WESTERN AVENUE BRIDGE
MESSALONSKEE STREAM
WATERVILLE KENNEBEC COUNTY

CROSS SECTIONS

SHEET NUMBER

9

OF 36

Sta. 13+25.00 to Sta. 13+36.99

Filename: ...\00\Bridge\MSTA\009_Xsect.dgn Division: BRIDGE Username: Date:10/15/2014

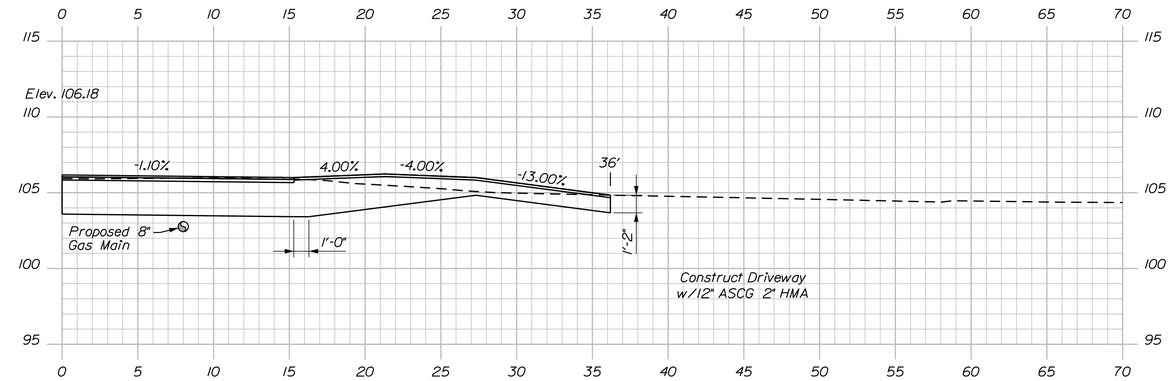

14+06.28 Drive (Skewed)

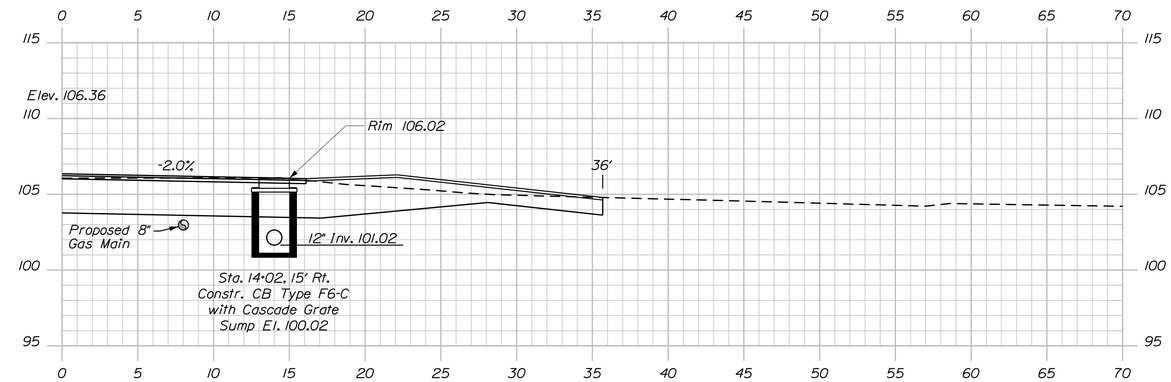

14+02.00

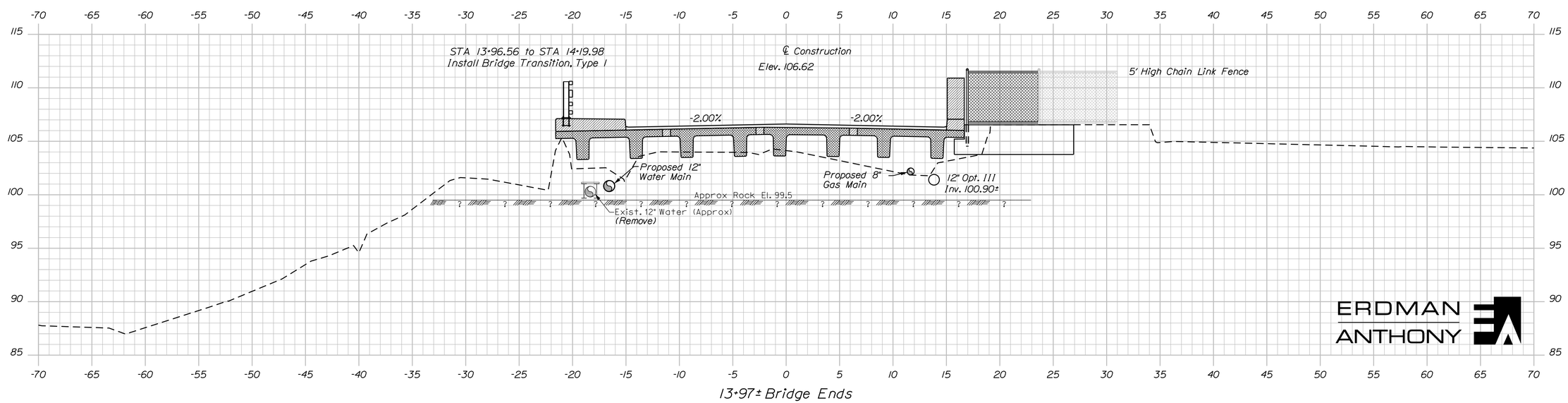

13+97± Bridge Ends

ERDMAN ANTHONY

STATE OF MAINE
DEPARTMENT OF TRANSPORTATION

BR-1823(400)X

WIN 18234.00

BRIDGE NO. 3836

BRIDGE PLANS

		BY	DATE
PROJ. MANAGER	STEPHEN BODGE II		
DESIGN-DETAILED	C. SICHAK	T. LINDO	10/2014
CHECKED-REVIEWED	F. DAHAR		
DESIGN2-DETAILED2			
DESIGN3-DETAILED3			
REVISIONS 1			
REVISIONS 2			
REVISIONS 3			
REVISIONS 4			
FIELD CHANGES			

SIGNATURE

P.E. NUMBER

DATE

WESTERN AVENUE BRIDGE
MESSALONSKEE STREAM
WATERVILLE KENNEBEC COUNTY

CROSS SECTIONS

SHEET NUMBER

10

OF 36

Sta. 13+95.77 to Sta. 14+06.28

Filename: ...\00\Bridge\MSTA\010_Xsect.dgn Division: BRIDGE Username: Date:10/15/2014

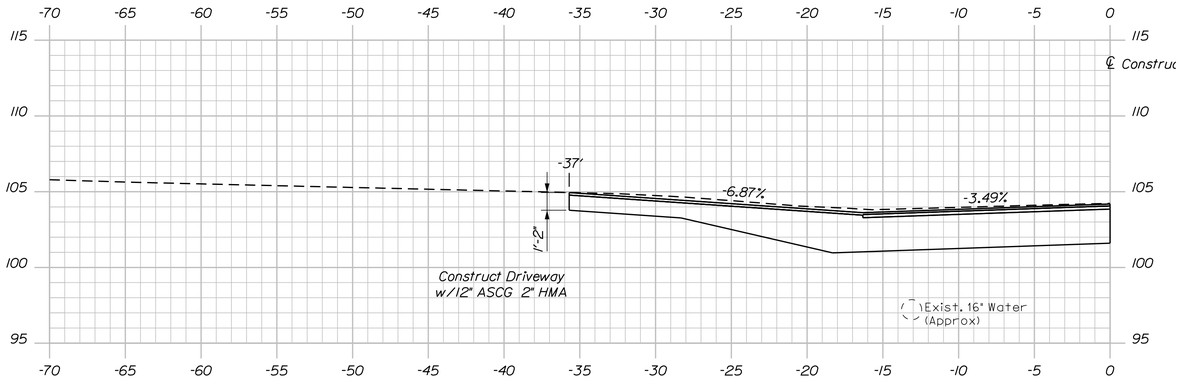

14+53.79 Drive (Skewed)

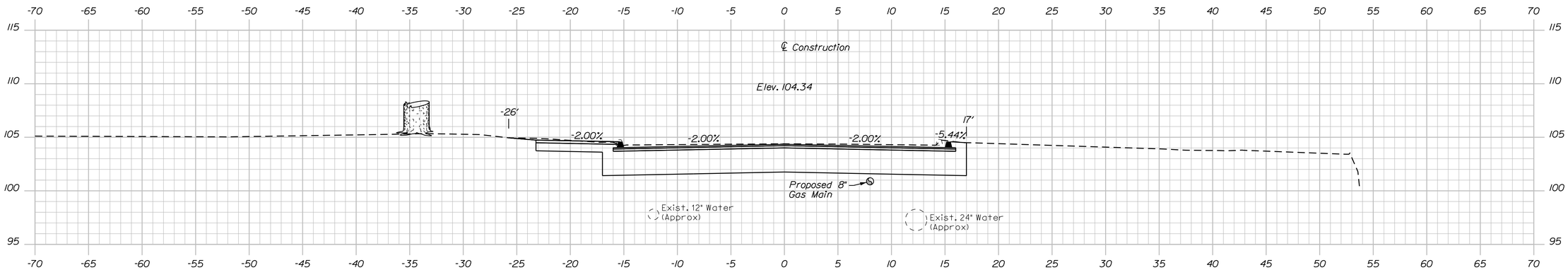

14+50.00

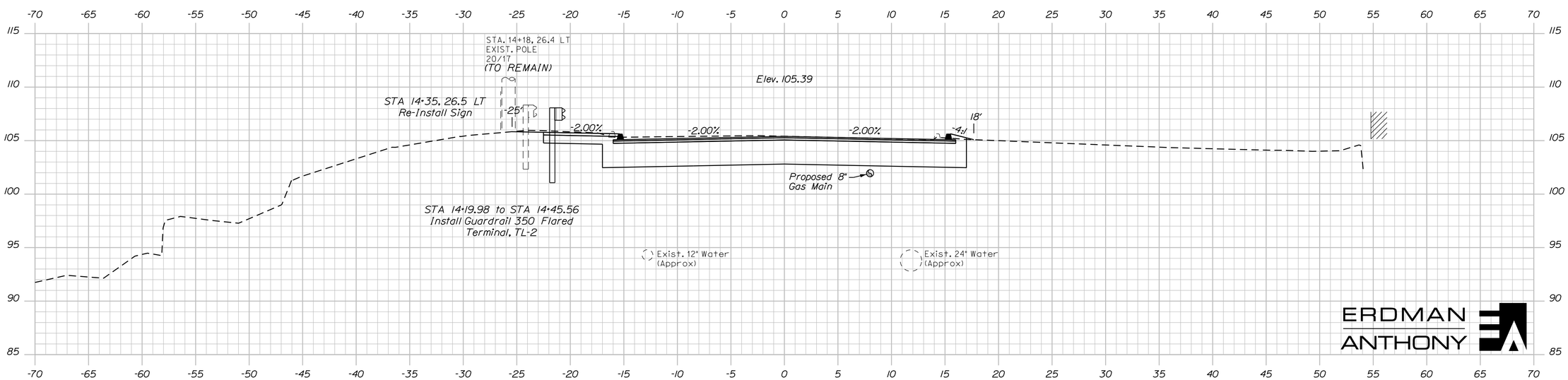

14+25.00

ERDMAN ANTHONY

STATE OF MAINE
DEPARTMENT OF TRANSPORTATION

BR-1823(400)X

WIN 18234.00

BRIDGE NO. 3836

BRIDGE PLANS

	BY	DATE
PROJ. MANAGER STEPHEN BODGE II		
DESIGN-DETAILED	T. LINDO	10/2014
CHECKED-REVIEWED	C. SICHAK	
DESIGN2-DETAILED2	F. DAHAR	
DESIGN3-DETAILED3		
REVISIONS 1		
REVISIONS 2		
REVISIONS 3		
REVISIONS 4		
FIELD CHANGES		

SIGNATURE

P.E. NUMBER

DATE

WESTERN AVENUE BRIDGE
MESSALONSKEE STREAM
WATERVILLE KENNEBEC COUNTY

CROSS SECTIONS

SHEET NUMBER

11

OF 36

Sta. 14+25.00 to Sta. 14+53.79

Filename: ...\00\Bridge\MSTA\011_Xsect.dgn Division: BRIDGE Username: Date:10/15/2014

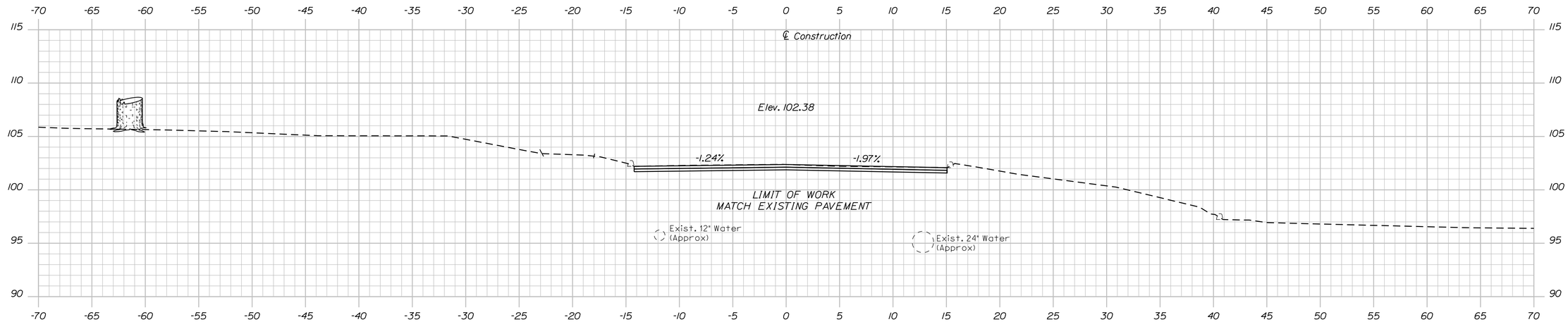

14+90.00

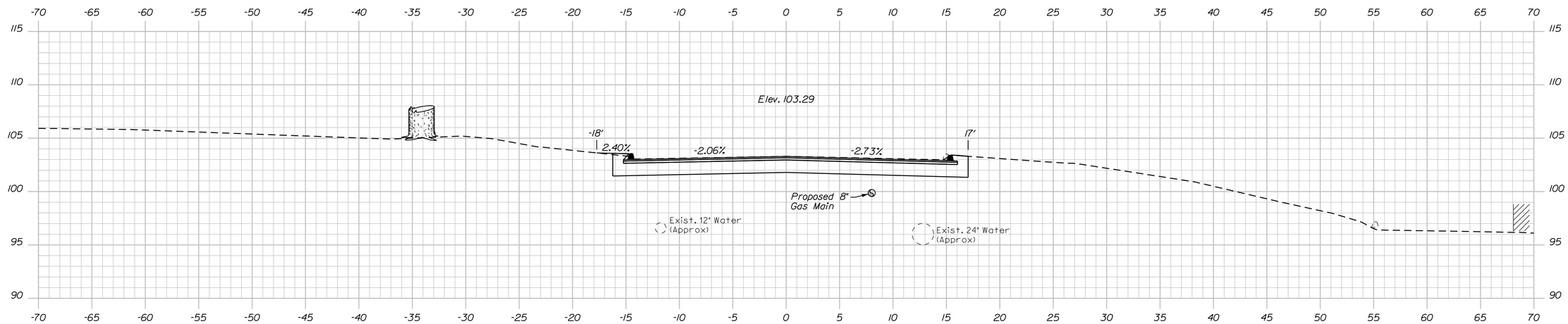

14+75.00

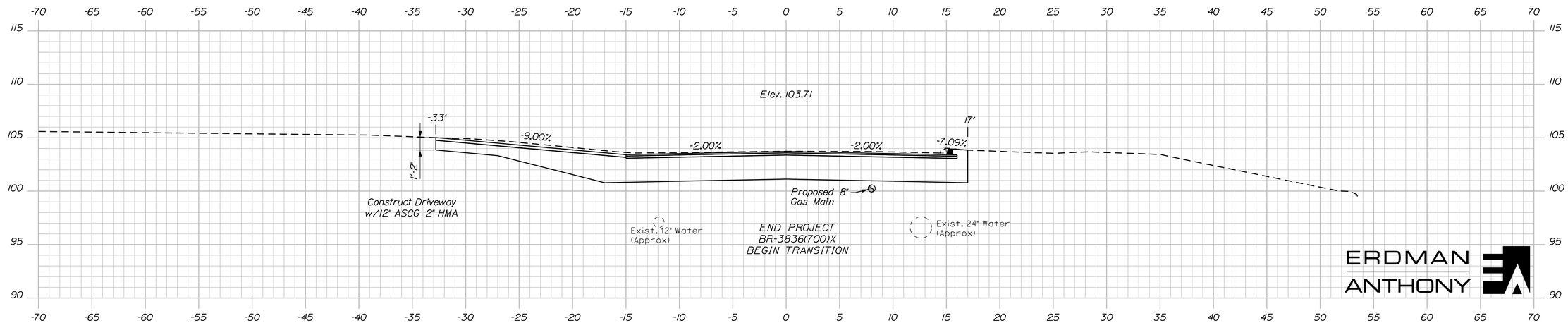

14+65.00

ERDMAN ANTHONY

STATE OF MAINE
DEPARTMENT OF TRANSPORTATION

BR-1823(400)X

WIN 18234.00

BRIDGE NO. 3836

BRIDGE PLANS

	BY	DATE
PROJ. MANAGER/STEPHEN BODGE II		
DESIGN-DETAILED	C. SICHAK	
CHECKED-REVIEWED	F. DAHAR	
DESIGN2-DETAILED2	T. LINDO	10/2014
DESIGN3-DETAILED3		
REVISIONS 1		
REVISIONS 2		
REVISIONS 3		
REVISIONS 4		
FIELD CHANGES		

SIGNATURE

P.E. NUMBER

DATE

WESTERN AVENUE BRIDGE
MESSALONSKEE STREAM
WATERVILLE KENNEBEC COUNTY

CROSS SECTIONS

SHEET NUMBER

12

OF 36

Sta. 14+65.00 to Sta. 14+90.00

Filename: ...\00\Bridge\MSTA\012_Xsect.dgn Division: BRIDGE Username: Date:10/15/2014

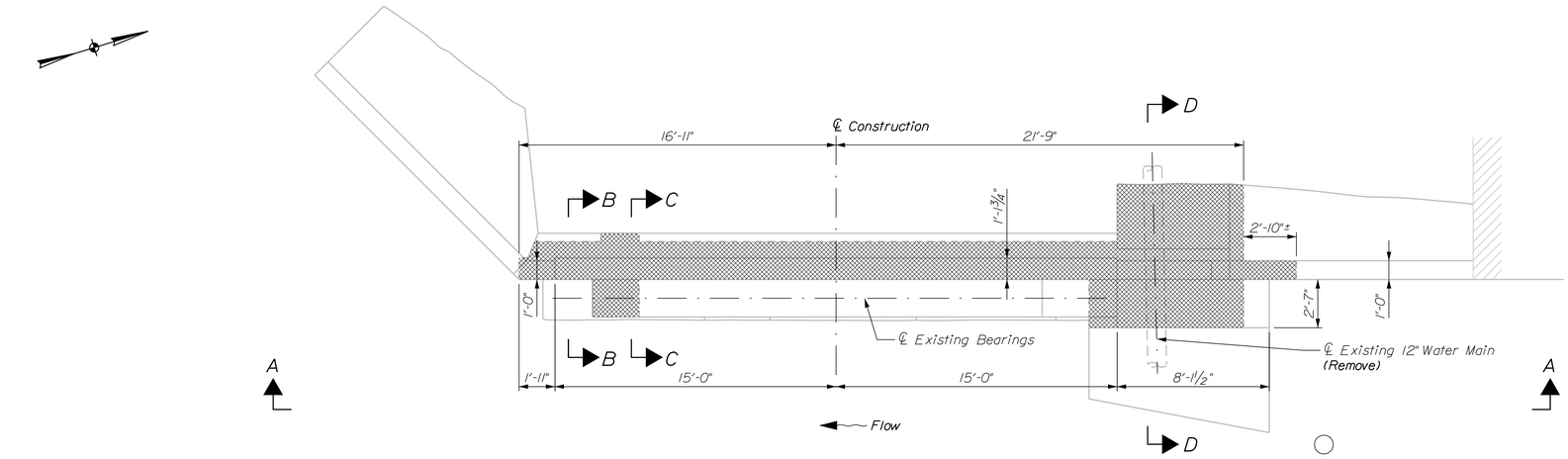

PLAN
Scale: ¼" = 1'-0"

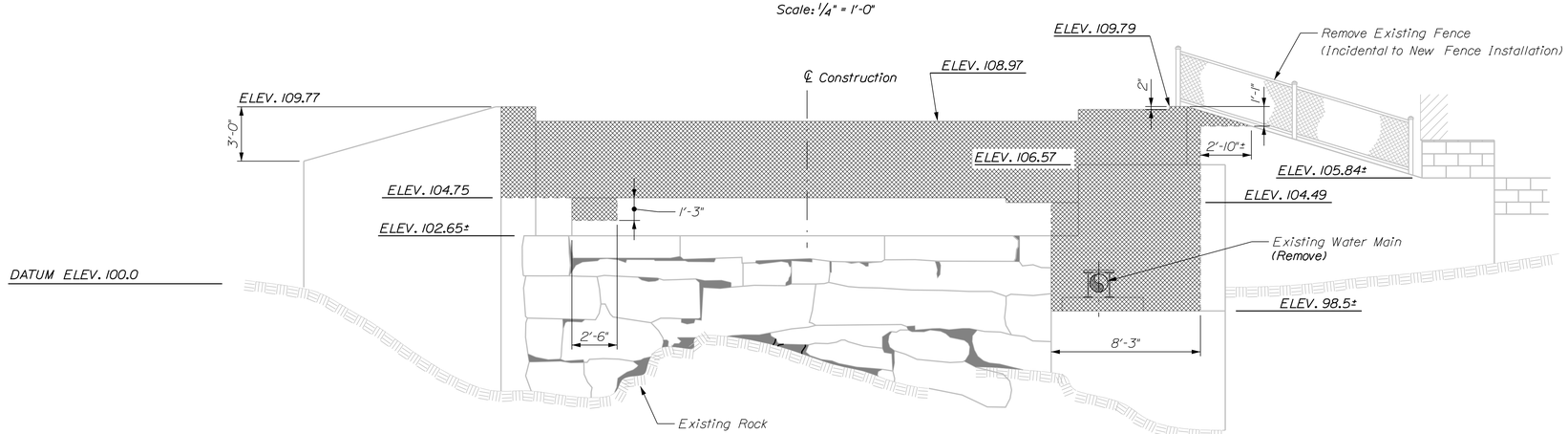

VIEW A-A
Scale: ¼" = 1'-0"

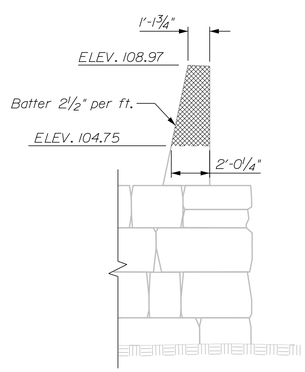

SECTION B-B
Scale: ¼" = 1'-0"

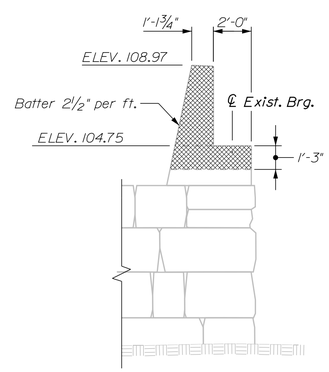

SECTION C-C
Scale: ¼" = 1'-0"

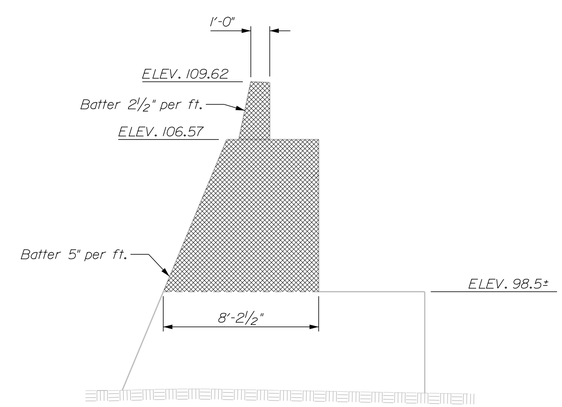

SECTION D-D
Scale: ¼" = 1'-0"

LEGEND:

Demolition Limit

ERDMAN ANTHONY

STATE OF MAINE
DEPARTMENT OF TRANSPORTATION

BR-1823(400)X

WIN 18234.00

BRIDGE NO. 3836

BRIDGE PLANS

	BY	DATE
PROJ. MANAGER STEPHEN BRIDGE II		
DESIGN-DETAILED	C. SICHAK	T. LINDO	10/2014
CHECKED-REVIEWED	F. DAHAR	
DESIGN2-DETAILED2		
DESIGN3-DETAILED3		
REVISIONS 1		
REVISIONS 2		
REVISIONS 3		
REVISIONS 4		
FIELD CHANGES		

SIGNATURE

P.E. NUMBER

DATE

WESTERN AVENUE BRIDGE
MESSALONSKEE STREAM
WATERVILLE KENNEBEC COUNTY

ABUTMENT No. 1 DEMOLITION

SHEET NUMBER
13
OF 36

Filename: ...\MSTA\013_Abutment 1 Demo.dgn Division: BRIDGE Username: Date:10/15/2014

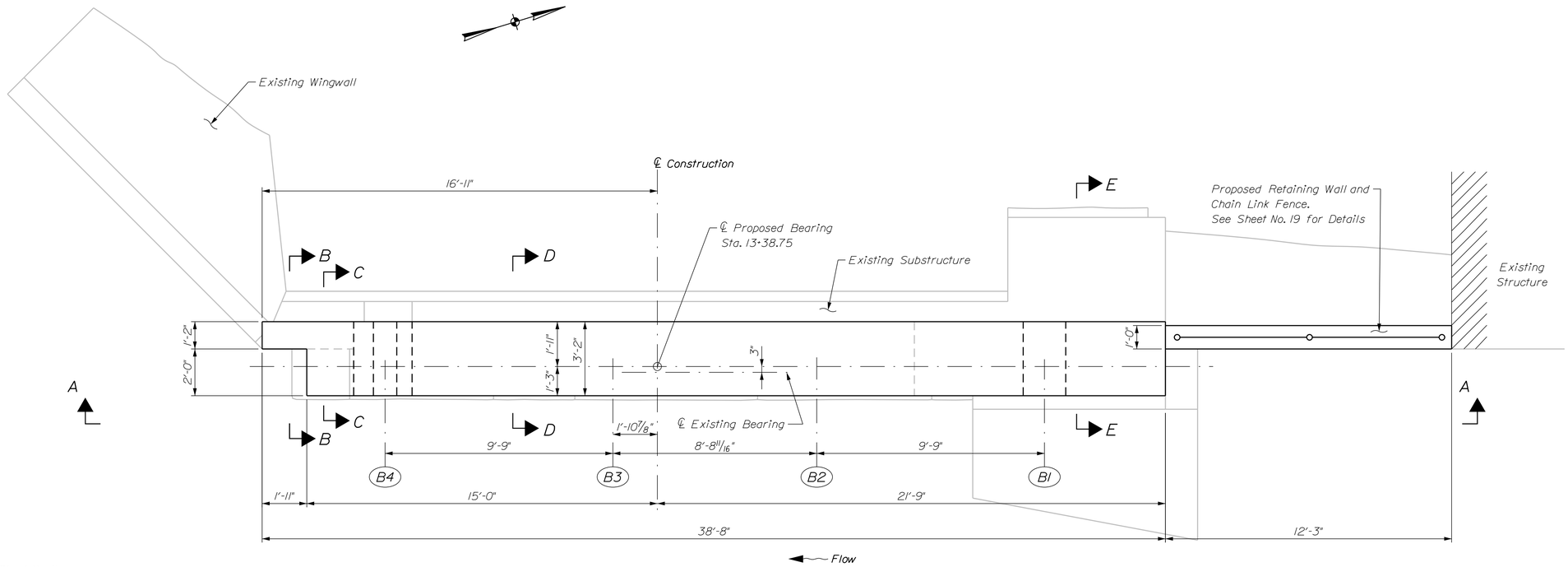

NOTES

1. For Cross Sections, see Sheet No. 15.
2. For additional Abutment Notes, see Sheet No. 17.

PLAN

Scale: 3/8" = 1'-0"

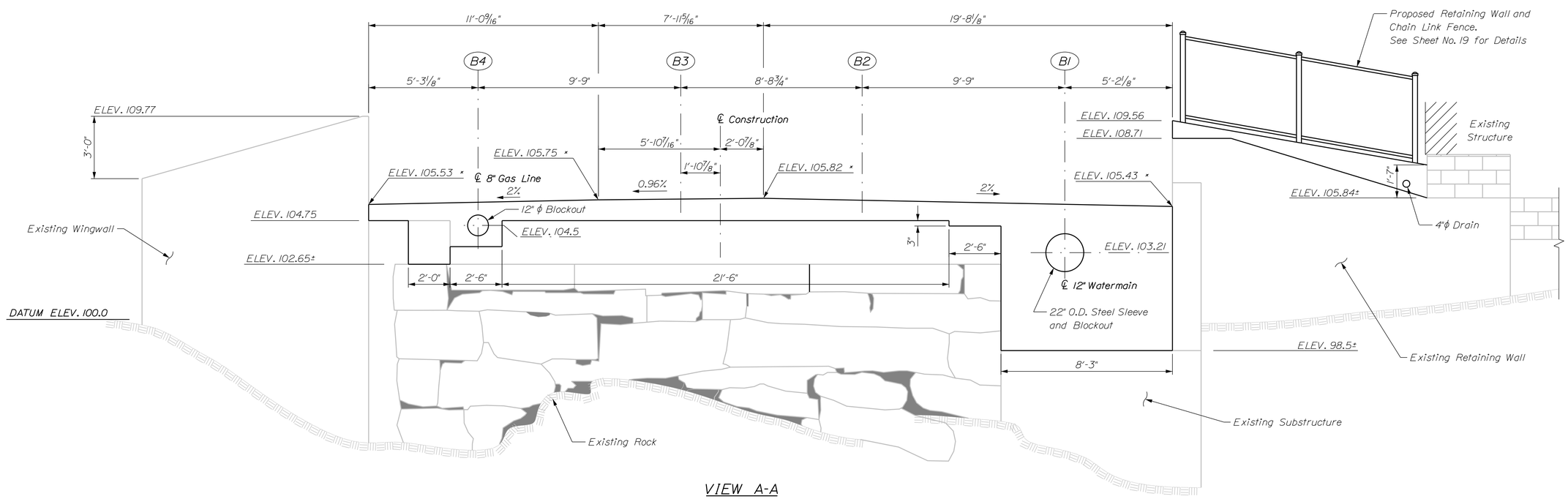

VIEW A-A

Scale: 3/8" = 1'-0"

* Abutment cap elevations provided at proposed ℄ of bearings.

ERDMAN ANTHONY

STATE OF MAINE
DEPARTMENT OF TRANSPORTATION

BR-1823(400)X

WIN 18234.00

BRIDGE NO. 3836

BRIDGE PLANS

		BY	DATE
PROJ. MANAGER	STEPHEN BOOSE II		
DESIGN-DETAILED	C. SICHAK	T. LINDO	10/2014
CHECKED-REVIEWED	F. DAHAR		
DESIGN2-DETAILED2			
DESIGN3-DETAILED3			
REVISIONS 1			
REVISIONS 2			
REVISIONS 3			
REVISIONS 4			
FIELD CHANGES			

SIGNATURE

P.E. NUMBER

DATE

WESTERN AVENUE BRIDGE
MESSALONSKEE STREAM
WATERVILLE KENNEBEC COUNTY

ABUTMENT No. 1 PLAN

SHEET NUMBER

14

OF 36

Date:10/15/2014 Username: Division: BRIDGE Filename: ...\MSTA\014_Abutment 1 Plan.dgn

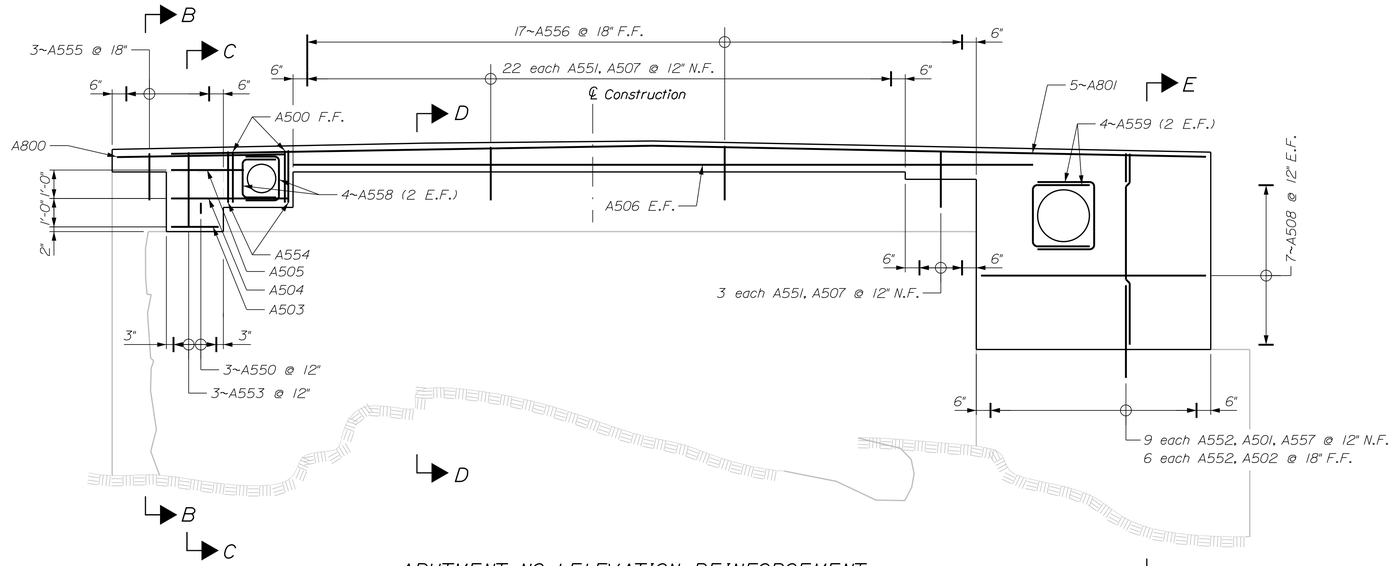

ABUTMENT NO. 1 ELEVATION REINFORCEMENT

Scale: 3/8" = 1'-0"

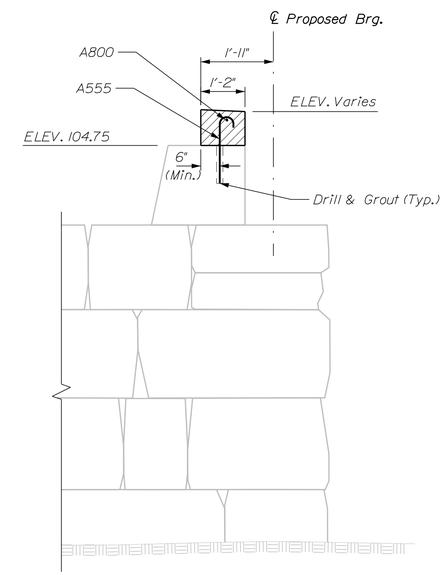

SECTION B-B

Scale: 1/2" = 1'-0"

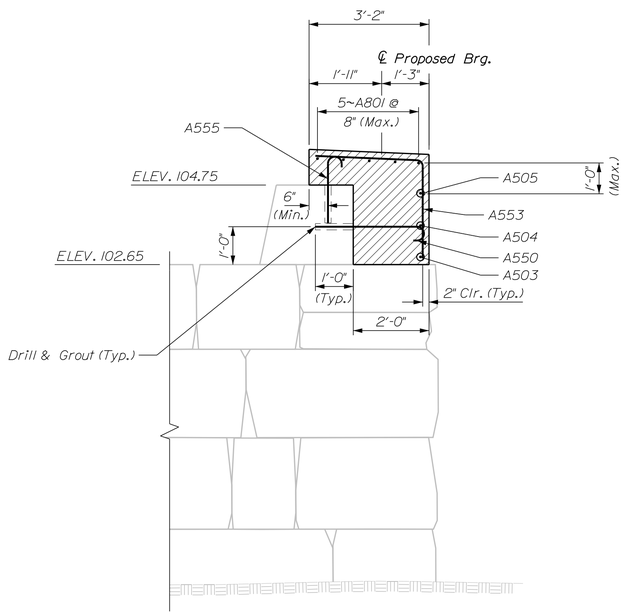

SECTION C-C

Scale: 1/2" = 1'-0"

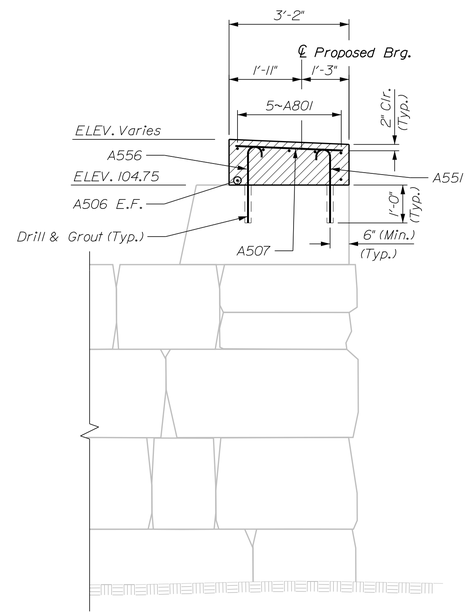

SECTION D-D

Scale: 1/2" = 1'-0"

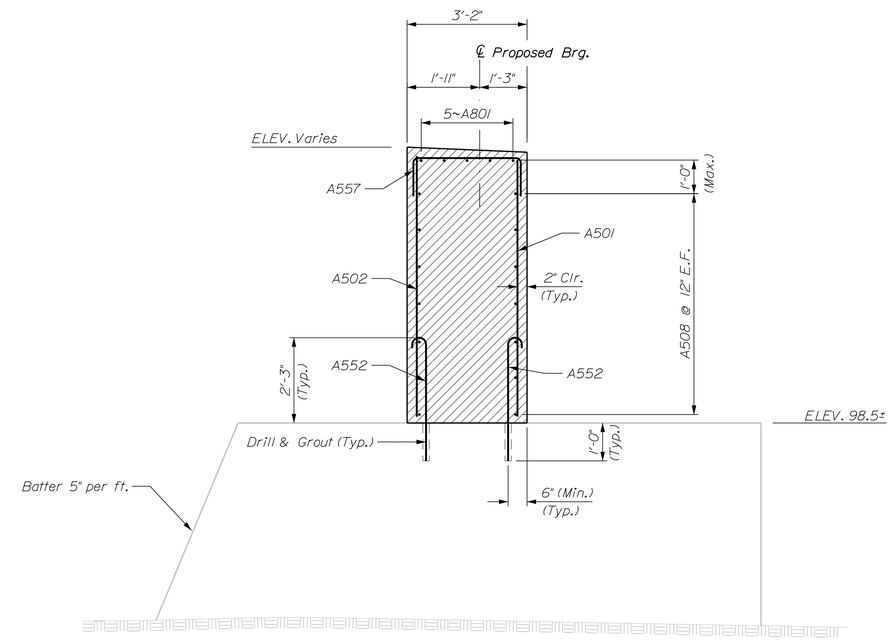

SECTION E-E

Scale: 1/2" = 1'-0"

LEGEND

Cast-in-Place Concrete

ERDMAN ANTHONY

STATE OF MAINE
DEPARTMENT OF TRANSPORTATION

BR-1823(400)X

WIN 18234.00

BRIDGE NO. 3836

BRIDGE PLANS

SIGNATURE

P.E. NUMBER

DATE

		BY	DATE
PROJ. MANAGER	STEPHEN BOOSE II		
DESIGN-DETAILED	C. SICHAK	T. LINDO	10/2014
CHECKED-REVIEWED	F. DAHAR		
DESIGN2-DETAILED2			
DESIGN3-DETAILED3			
REVISIONS 1			
REVISIONS 2			
REVISIONS 3			
REVISIONS 4			
FIELD CHANGES			

WESTERN AVENUE BRIDGE
MESSALONSKEE STREAM
WATERVILLE KENNEBEC COUNTY

ABUTMENT No. 1 SECTIONS

SHEET NUMBER

15

OF 36

Date:10/15/2014 Username: Division: BRIDGE Filename: ...\015_Abutment 1 Sections.dgn

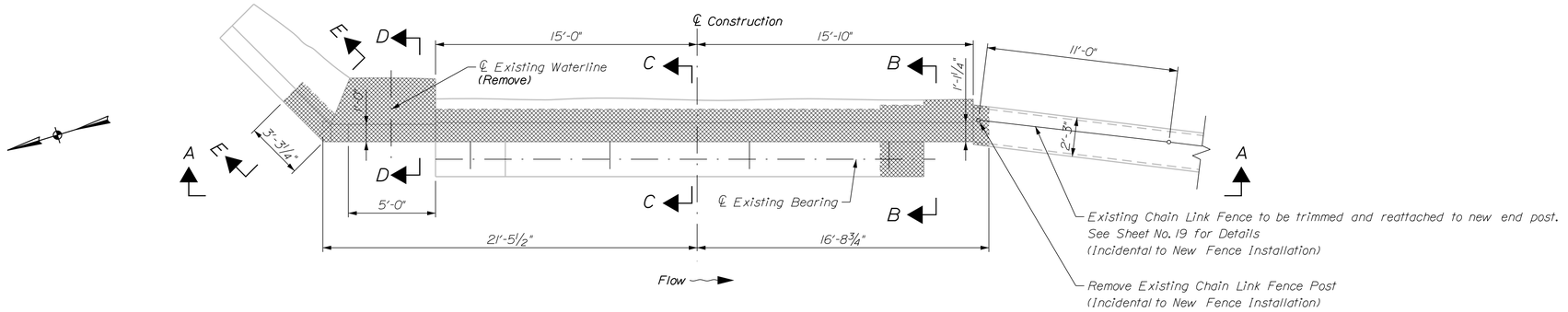

PLAN
Scale: ¼" = 1'-0"

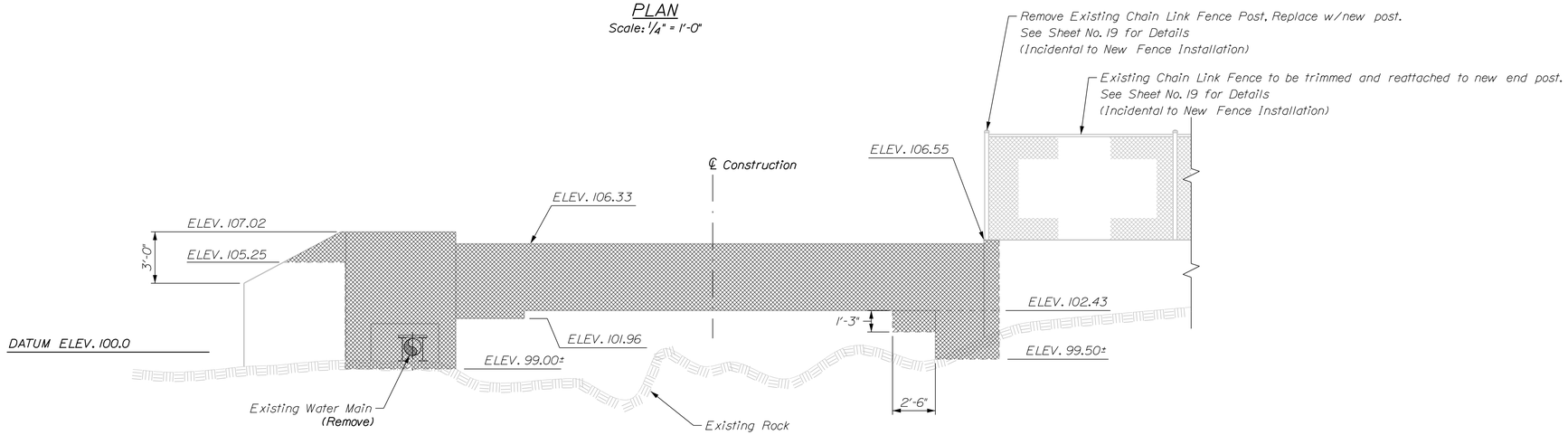

VIEW A-A
Scale: ¼" = 1'-0"

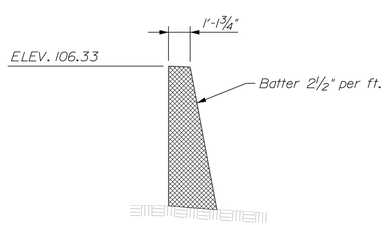

SECTION B-B
Scale: ¼" = 1'-0"

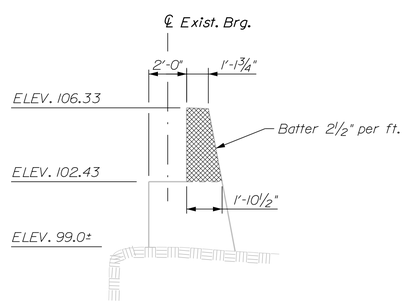

SECTION C-C
Scale: ¼" = 1'-0"

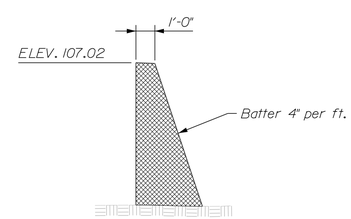

SECTION D-D
Scale: ¼" = 1'-0"

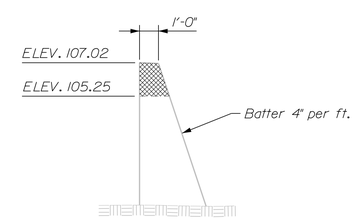

SECTION E-E
Scale: ¼" = 1'-0"

LEGEND:

Demolition Limit

ERDMAN ANTHONY

STATE OF MAINE
DEPARTMENT OF TRANSPORTATION

BR-1823(400)X

WIN 18234.00

BRIDGE NO. 3836

BRIDGE PLANS

		BY	DATE
PROJ. MANAGER	STEPHEN BRIDGE II		
DESIGN-DETAILED	C. SICHAK	T. LINDO	10/2014
CHECKED-REVIEWED	F. DAHAR		
DESIGN2-DETAILED2			
DESIGN3-DETAILED3			
REVISIONS 1			
REVISIONS 2			
REVISIONS 3			
REVISIONS 4			
FIELD CHANGES			

SIGNATURE

P.E. NUMBER

DATE

WESTERN AVENUE BRIDGE
MESSALONSKEE STREAM
WATERVILLE KENNEBEC COUNTY

ABUTMENT No. 2 DEMOLITION

SHEET NUMBER
16
OF 36

Filename: ...\MSTA\016_Abutment 2 Demo.dgn Division: BRIDGE Username: Date:10/15/2014

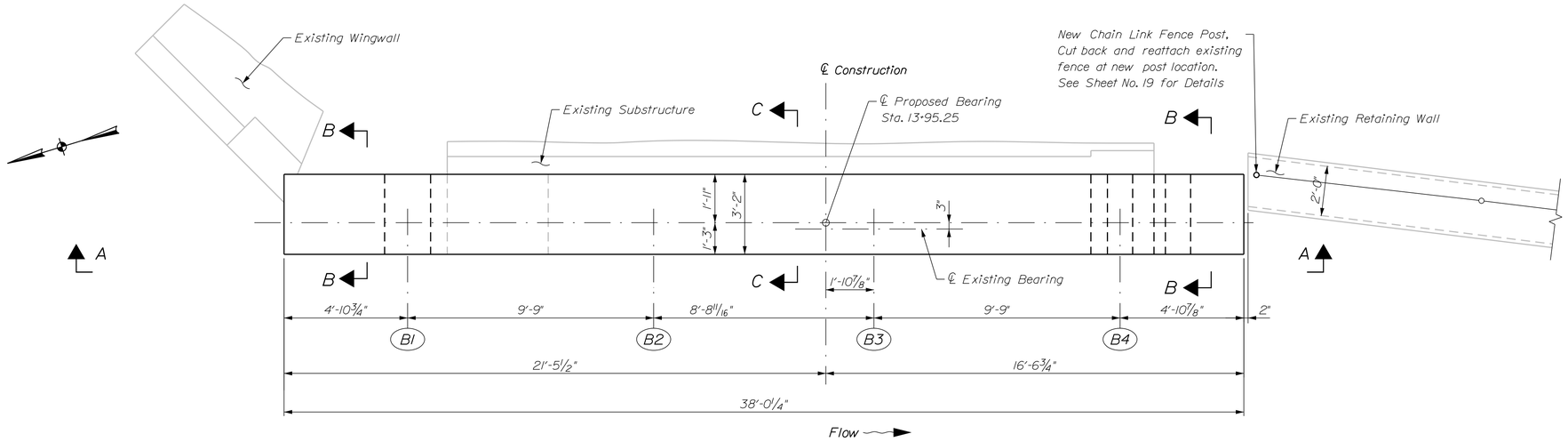

PLAN

Scale: 3/8" = 1'-0"

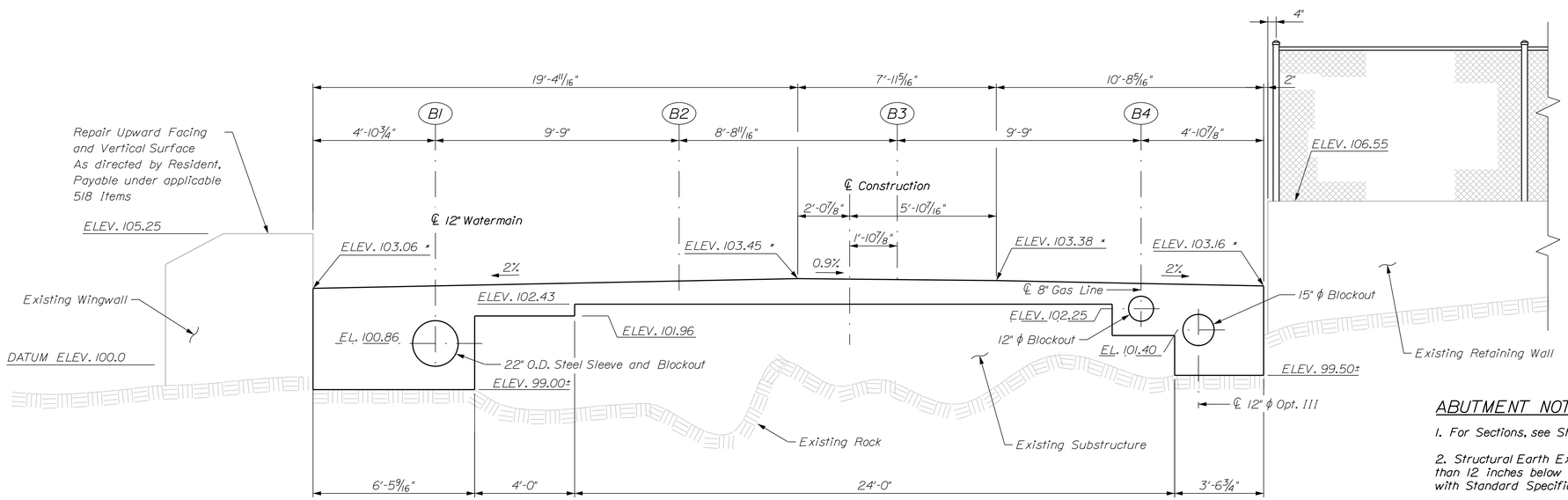

VIEW A-A

Scale: 3/8" = 1'-0"

* Abutment cap elevations provided at proposed ℄ of bearings.

ABUTMENT NOTES

1. For Sections, see Sheet No. 18.

2. Structural Earth Excavation, Abutments and Retaining Walls, required more than 12 inches below the bottom of the structure, will be paid for in accordance with Standard Specifications Section 206, Structural Excavation.

3. Cover joints where waterstops are not required in accordance with Standard Details Section 502(01).

4. Construct French Drains behind the abutments and wingwalls in accordance with Standard Specifications Section 512, French Drains. Tie-in to proposed Catch Basins.

5. Abutments, wingwalls and their footings shall be backfilled with Granular Borrow. Pay limits will be the structural excavation limits in cut areas and a vertical plane located 10 feet behind the walls in fill areas.

6. Reinforcing steel shall have a minimum concrete cover of 2 inches in walls and 3 inches in footings unless otherwise noted.

7. Bedrock surface shall be cleaned of all weathered bedrock, fractured material, loose soil and/or ponded water prior to placement of the footing concrete. Smooth bedrock shall be roughened or serrated as directed by Resident Engineer.

ERDMAN ANTHONY

STATE OF MAINE
DEPARTMENT OF TRANSPORTATION

BR-1823(400)X

WIN 18234.00

BRIDGE NO. 3836

BRIDGE PLANS

		BY	DATE
PROJ. MANAGER	STEPHEN BODGE II		
DESIGN-DETAILED	C. SICHAK	T. LINDO	10/2014
CHECKED-REVIEWED	F. DAHAR		
DESIGN2-DETAILED2			
DESIGN3-DETAILED3			
REVISIONS 1			
REVISIONS 2			
REVISIONS 3			
REVISIONS 4			
FIELD CHANGES			

SIGNATURE

P.E. NUMBER

DATE

WESTERN AVENUE BRIDGE
MESSALONSKEE STREAM
WATERVILLE KENNEBEC COUNTY

ABUTMENT No. 2 PLAN

SHEET NUMBER

17

OF 36

Filename: ...\MSTA\017_Abutment 2 Plan.dgn Division: BRIDGE Username: Date:10/15/2014

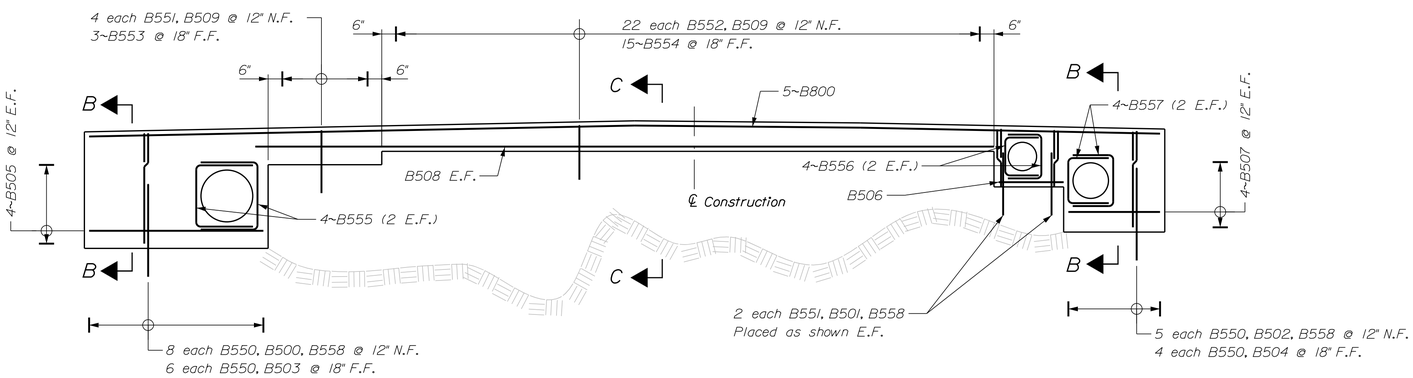

ABUTMENT NO. 2 ELEVATION REINFORCEMENT

Scale: 3/8" = 1'-0"

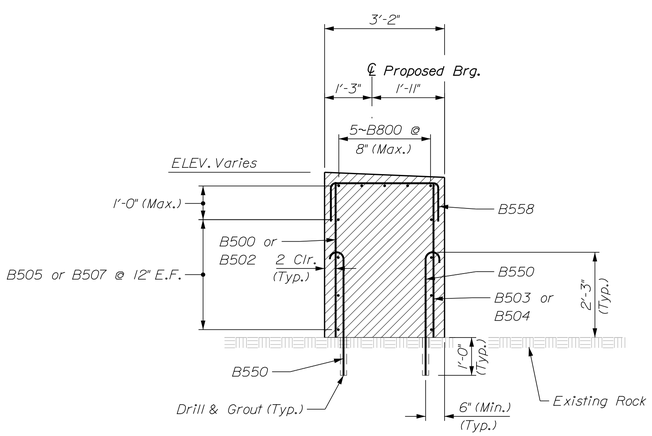

SECTION B-B

Scale: 1/2" = 1'-0"

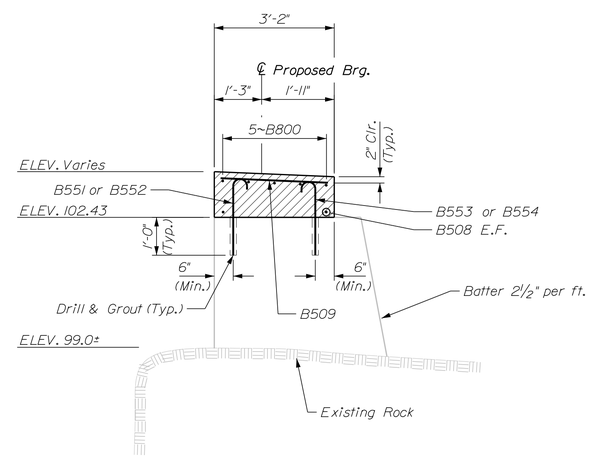

SECTION C-C

Scale: 1/2" = 1'-0"

LEGEND

Cast-in-Place Concrete

ERDMAN ANTHONY

STATE OF MAINE
DEPARTMENT OF TRANSPORTATION

BR-1823(400)X

WIN 18234.00

BRIDGE NO. 3836

BRIDGE PLANS

PROJ. MANAGER	STEPHEN BRODIE II	BY	DATE
DESIGN-DETAILED	C. SICHAK	T. LINDO	10/2014
CHECKED-REVIEWED	F. DAHAR		
DESIGN2-DETAILED2			
DESIGN3-DETAILED3			
REVISIONS 1			
REVISIONS 2			
REVISIONS 3			
REVISIONS 4			
FIELD CHANGES			

SIGNATURE

P.E. NUMBER

DATE

WESTERN AVENUE BRIDGE
MESSALONSKEE STREAM
WATERVILLE KENNEBEC COUNTY

ABUTMENT No. 2 SECTIONS

SHEET NUMBER

18

OF 36

Filename: ...\018_Abutment 2 Sections.dgn Division: BRIDGE Username: Date:10/15/2014

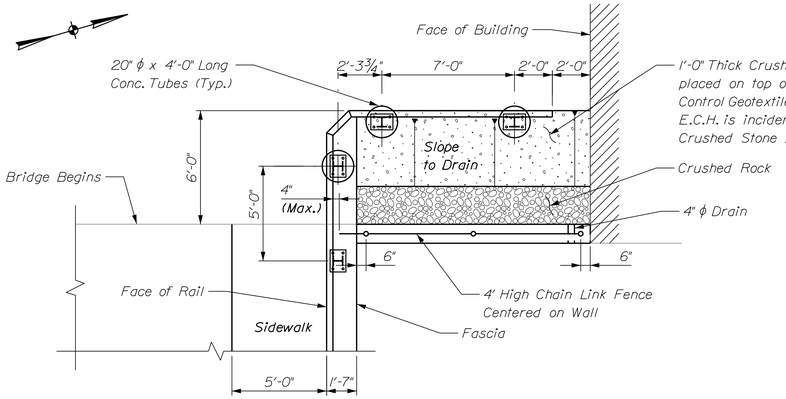

N.W. CORNER PLAN

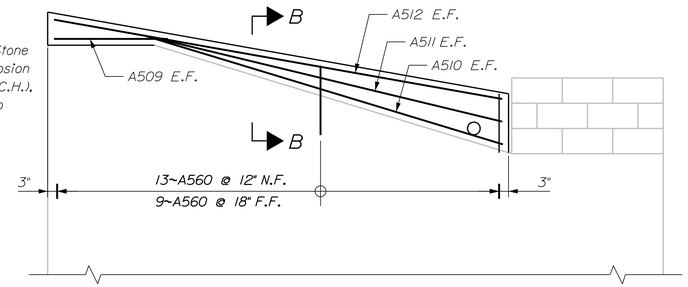

RETAINING WALL ELEVATION REINFORCEMENT

Scale: ½"=1'-0"

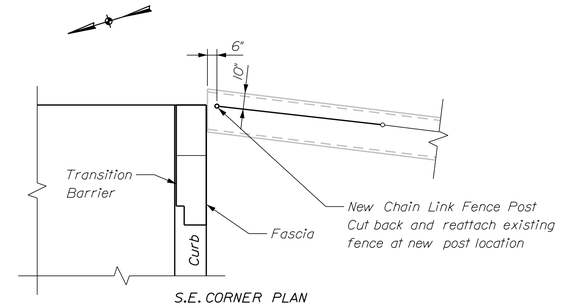

S.E. CORNER PLAN

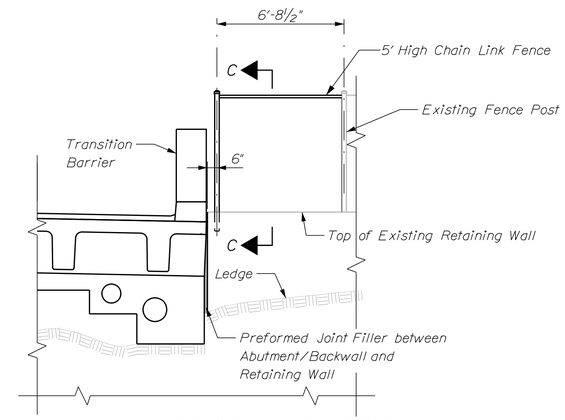

S.E. CORNER PARTIAL ELEVATION

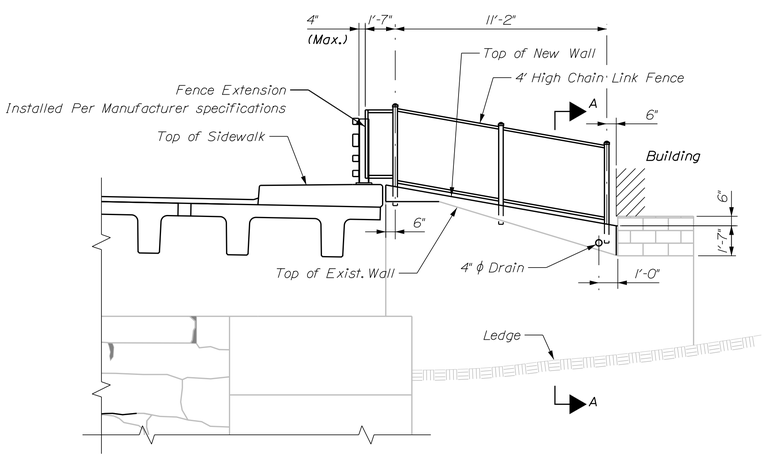

N.W. CORNER PARTIAL ELEVATION

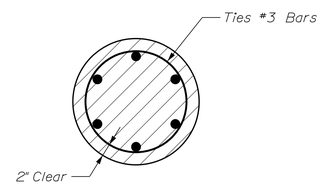

SECTION D-D

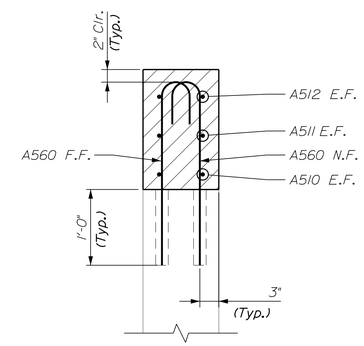

SECTION B-B

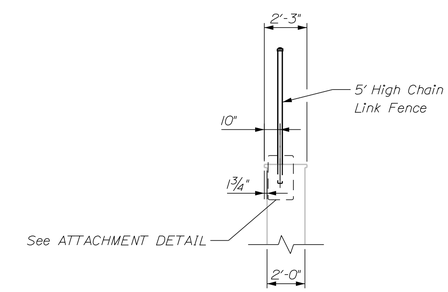

SECTION C-C

ABUTMENT No. 2 SE CORNER DETAILS

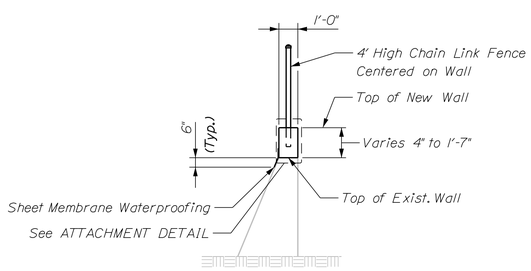

SECTION A-A

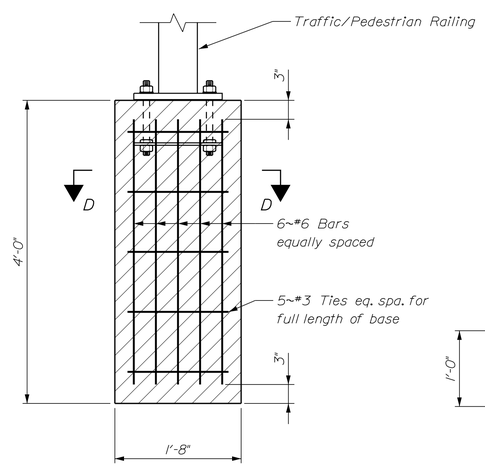

ATTACHMENT DETAIL

(Bridge Post)

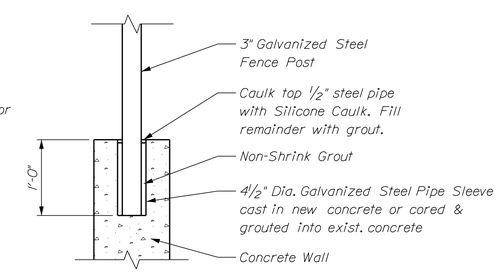

ATTACHMENT DETAIL

(Chain Link Fence)

ABUTMENT No. 1 NW CORNER DETAILS

ERDMAN ANTHONY

STATE OF MAINE
DEPARTMENT OF TRANSPORTATION

BR-1823(400)X

WIN 18234.00

BRIDGE NO. 3836

BRIDGE PLANS

	BY	DATE
PROJ. MANAGER	STEPHEN BIDGE II	
DESIGN-DETAILED	C. SICHAK	10/2014
CHECKED-REVIEWED	T. LINDO	
DESIGN2-DETAILED2	F. DAHAR	
DESIGN3-DETAILED3		
REVISIONS 1		
REVISIONS 2		
REVISIONS 3		
REVISIONS 4		
FIELD CHANGES		

SIGNATURE

P.E. NUMBER

DATE

WESTERN AVENUE BRIDGE
MESSALONSKEE STREAM
WATERVILLE KENNEBEC COUNTY

RETAINING WALL DETAILS

SHEET NUMBER

19

OF 36

Filename: ...\MSTA\019_Ret WallDetails.dgn Division: BRIDGE Username: Date:10/15/2014

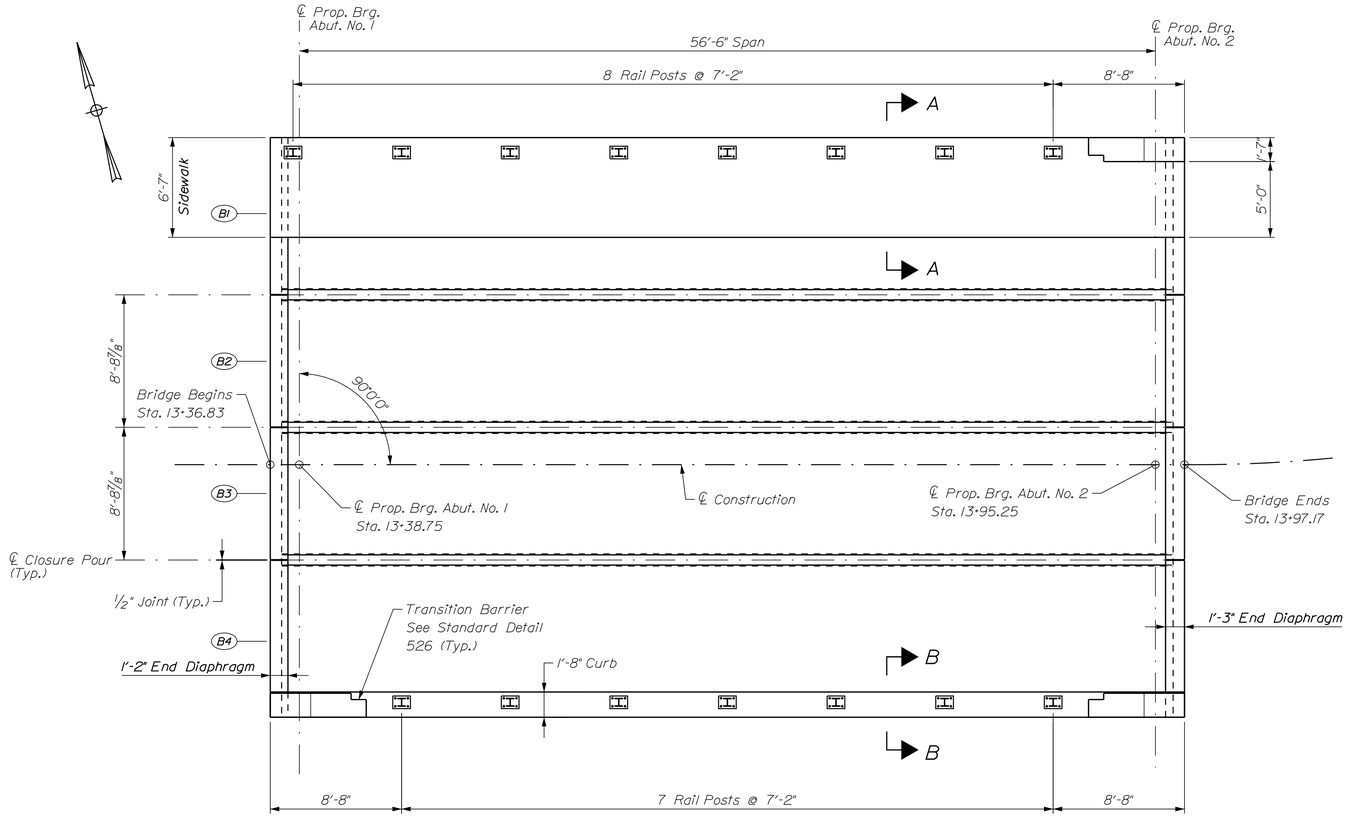

SUPERSTRUCTURE PLAN

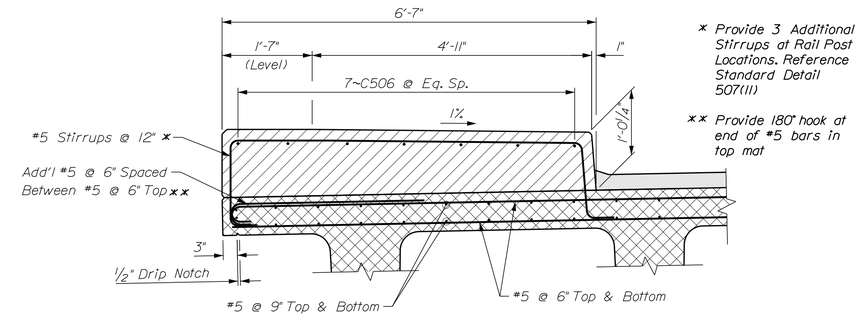

SECTION A-A

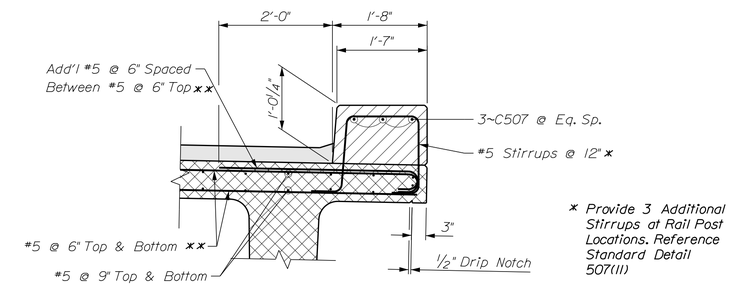

SECTION B-B

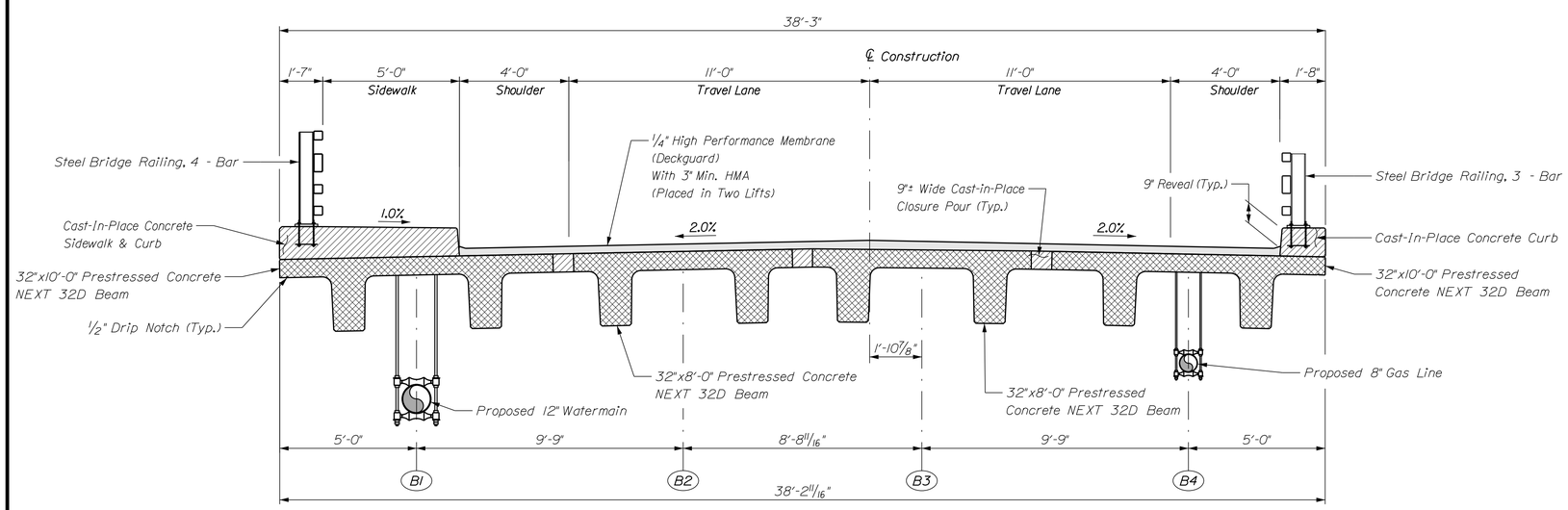

TRANSVERSE BRIDGE SECTION

SUPERSTRUCTURE NOTES

1. Reinforcing steel shall have a minimum concrete cover of 2 inches unless otherwise noted.

2. The concrete curb and sidewalk shall not be placed until the NEXT Beam has achieved the 28-day design strength. Payment for the concrete curb will be made under Item No. 502.49, Structural Concrete Curbs and Sidewalks.

3. Reinforcing in the concrete curb shall meet the requirements of Special Provision Section 503 and will be paid for under Item 502.49.

4. The Contractor shall install Transition Barrier vertical closed stirrups, as shown in Standard Details Section 526 prior to the placement of the concrete curb.

5. Reference Standard Detail 526 for reinforcing layout in the Transition Barrier.

6. Form a 1" V-Groove on the fascias at the horizontal joint between the curb and NEXT Beam.

LEGEND

Cast-in-Place Concrete

Precast Concrete

ERDMAN ANTHONY

STATE OF MAINE
DEPARTMENT OF TRANSPORTATION

BR-1823(400)X

WIN 18234.00

BRIDGE NO. 3836

BRIDGE PLANS

	BY	DATE
PROJ. MANAGER STEPHEN BROOE II		
DESIGN-DETAILED C. SICHAK	T. LINDO	10/2014
CHECKED-REVIEWED F. DAHAR		
DESIGN2-DETAILED2		
DESIGN3-DETAILED3		
REVISIONS 1		
REVISIONS 2		
REVISIONS 3		
REVISIONS 4		
FIELD CHANGES		

SIGNATURE

P.E. NUMBER

DATE

WESTERN AVENUE BRIDGE
MESSALONSKEE STREAM
WATERVILLE KENNEBEC COUNTY

SUPERSTRUCTURE PLAN AND PROPOSED BRIDGE SECTION

SHEET NUMBER

20

OF 36

Filename: ...\020_Superstructure Plan.dgn Division: BRIDGE Username: Date:10/15/2014

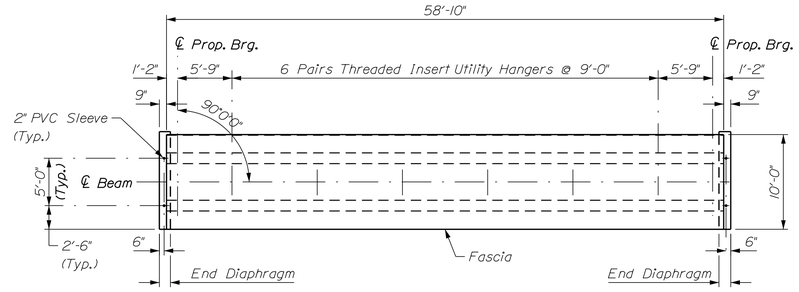

NEXT BEAM EXTERIOR PLAN

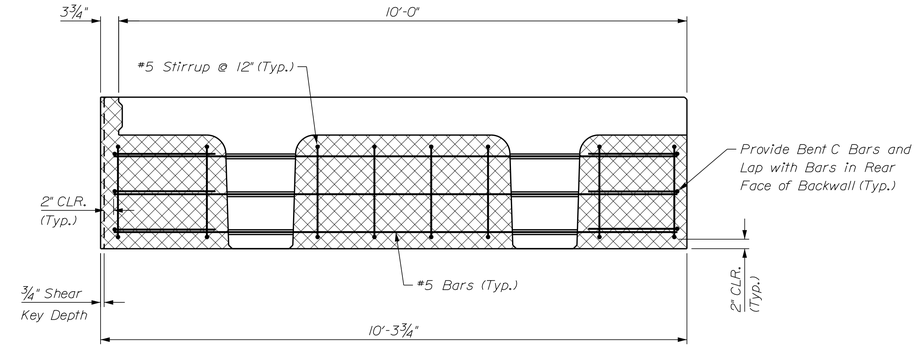

END DIAPHRAGM ELEVATION - 10' NEXT BEAM

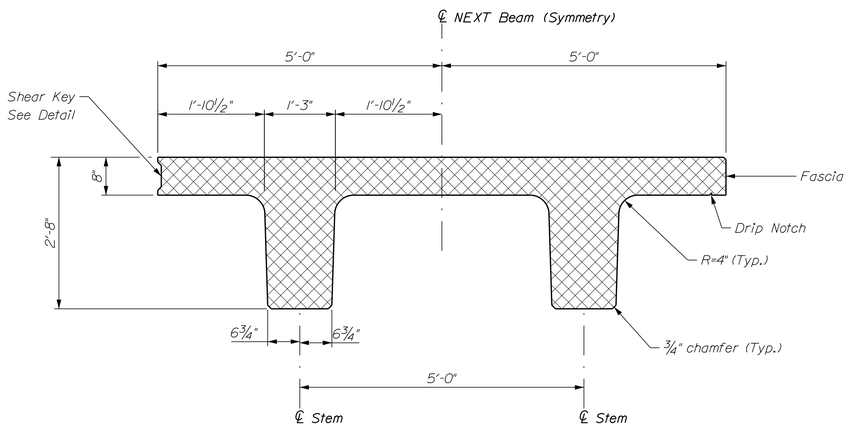

NEXT BEAM EXTERIOR SECTION

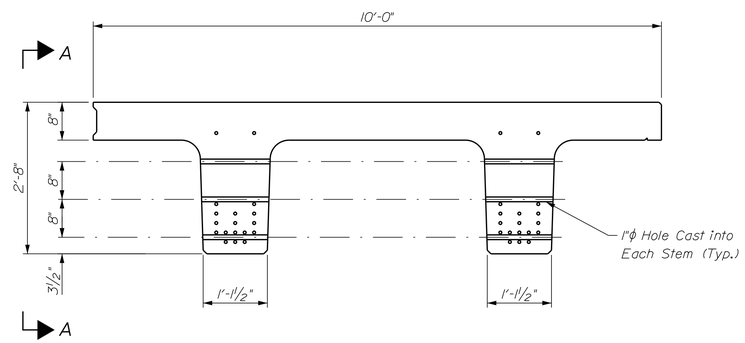

END OF BEAM SLEEVE LOCATIONS - 10' NEXT BEAM

REINFORCING NOT SHOWN FOR CLARITY

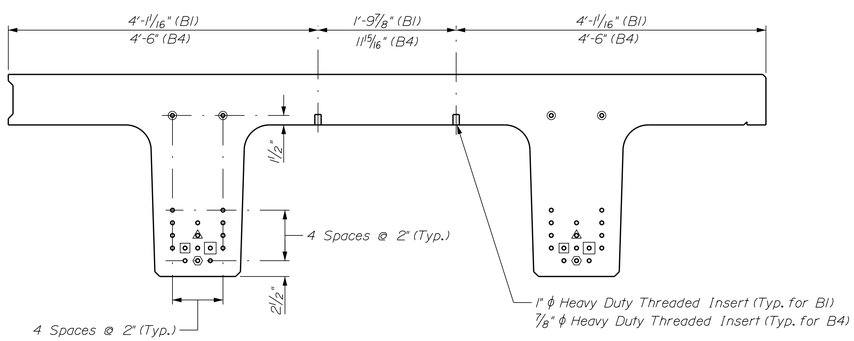

TYPICAL STRAND LOCATIONS - 10' BEAM

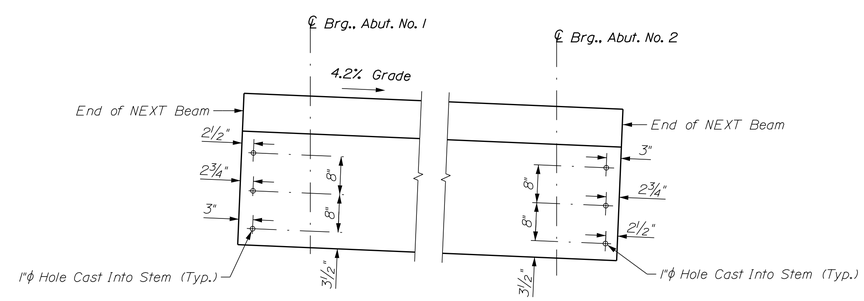

ELEVATION A-A - SLEEVE LOCATIONS

NOTES

1. 50 percent of strands to be debonded a minimum of 6 inches from end of beam.

PRE-STRESSING LEGEND

- Debonded 2'
- Debonded 4'
- Debonded 6'
- Nominally Tensioned Strand

LEGEND

Precast Concrete

ERDMAN ANTHONY

STATE OF MAINE
DEPARTMENT OF TRANSPORTATION

BR-1823(400)X

WIN 18234.00

BRIDGE NO. 3836

BRIDGE PLANS

		BY	DATE
PROJ. MANAGER	STEPHEN BROOE II		
DESIGN-DETAILED	C. SICHAK	T. LINDO	10/2014
CHECKED-REVIEWED	F. DAHAR		
DESIGN2-DETAILED2			
DESIGN3-DETAILED3			
REVISIONS 1			
REVISIONS 2			
REVISIONS 3			
REVISIONS 4			
FIELD CHANGES			

SIGNATURE

P.E. NUMBER

DATE

WESTERN AVENUE BRIDGE
MESSALONSKEE STREAM
WATERVILLE KENNEBEC COUNTY

BEAM DETAILS
(1 OF 4)

SHEET NUMBER

21

OF 36

Filename: ...\021_Precast Next Beams-1.dgn Division: BRIDGE Username: Date:10/15/2014

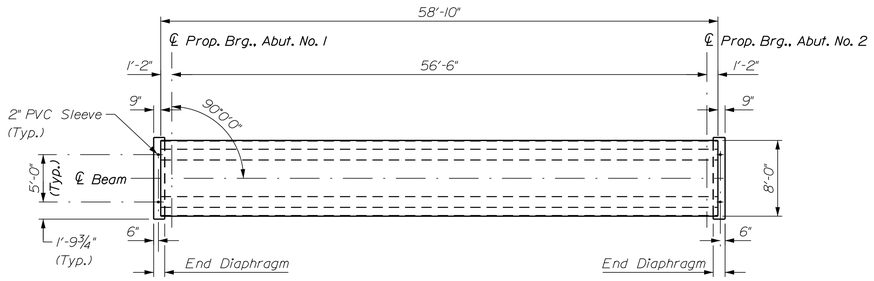

NEXT BEAM INTERIOR PLAN

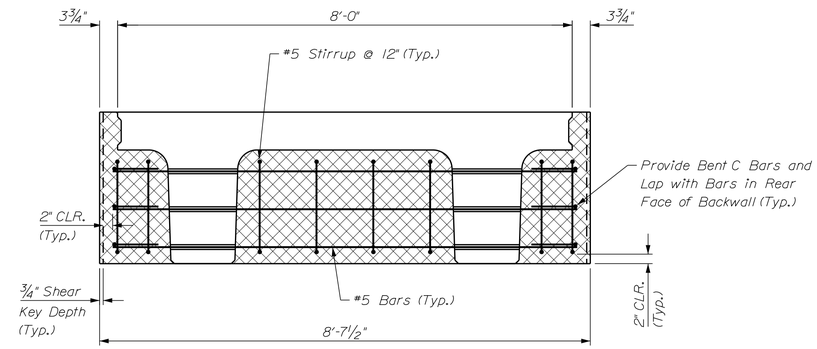

END DIAPHRAGM ELEVATION - 8' NEXT BEAM

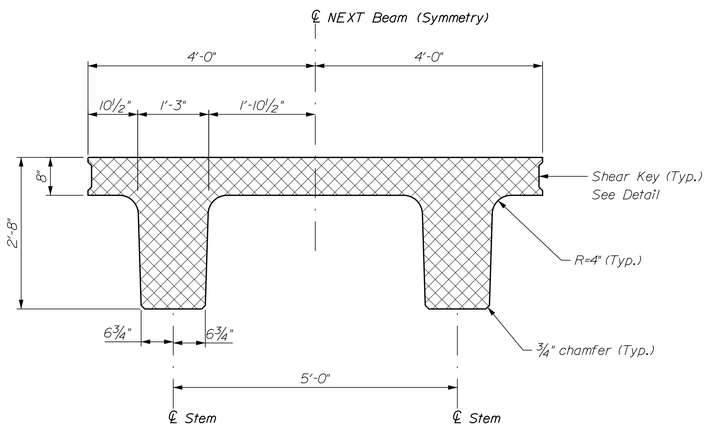

NEXT BEAM INTERIOR SECTION

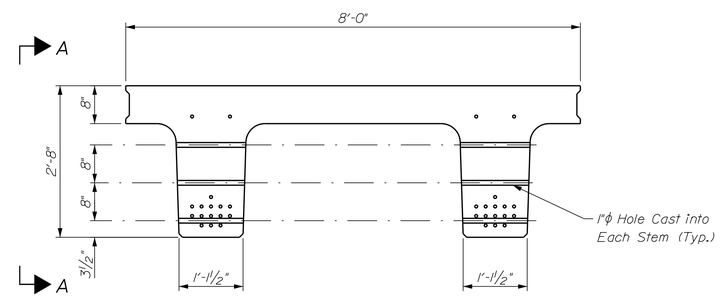

END OF BEAM SLEEVE LOCATIONS - 8' NEXT BEAM

REINFORCING NOT SHOWN FOR CLARITY

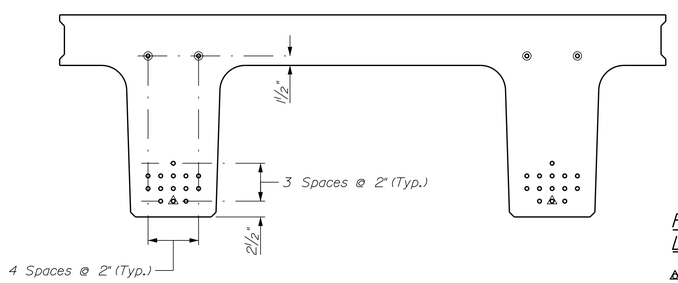

TYPICAL STRAND LOCATIONS - 8' BEAM

PRE-STRESSING LEGEND

- Debonded 2'
- Debonded 4'
- Debonded 6'
- Nominally Tensioned Strand

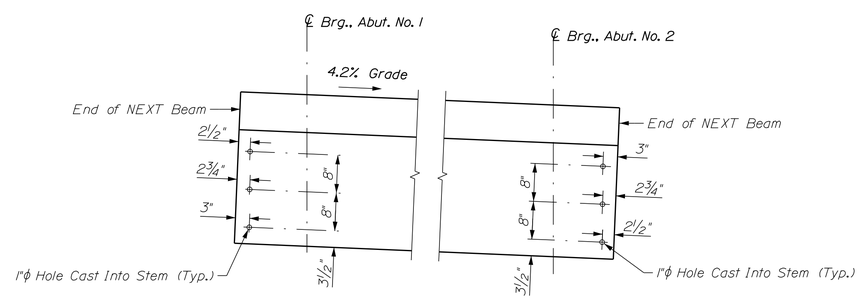

ELEVATION A-A - SLEEVE LOCATIONS

LEGEND

Precast Concrete

NOTES

1. 50 percent of strands to be debonded a minimum of 6 inches from end of beam.

ERDMAN ANTHONY

STATE OF MAINE
DEPARTMENT OF TRANSPORTATION

BR-1823(400)X

WIN 18234.00

BRIDGE NO. 3836

BRIDGE PLANS

PROJ. MANAGER	STEPHEN BRIDGE II	BY	DATE
DESIGN-DETAILED	C. SICHAK	T. LINDO	10/2014
CHECKED-REVIEWED	F. DAHAR		
DESIGN2-DETAILED2			
DESIGN3-DETAILED3			
REVISIONS 1			
REVISIONS 2			
REVISIONS 3			
REVISIONS 4			
FIELD CHANGES			

SIGNATURE

P.E. NUMBER

DATE

WESTERN AVENUE BRIDGE
MESSALONSKEE STREAM
WATERVILLE KENNEBEC COUNTY

BEAM DETAILS
(2 OF 4)

SHEET NUMBER

22

OF 36

Filename: ...\022_Precast Next Beams-2.dgn Division: BRIDGE Username: Date:10/15/2014

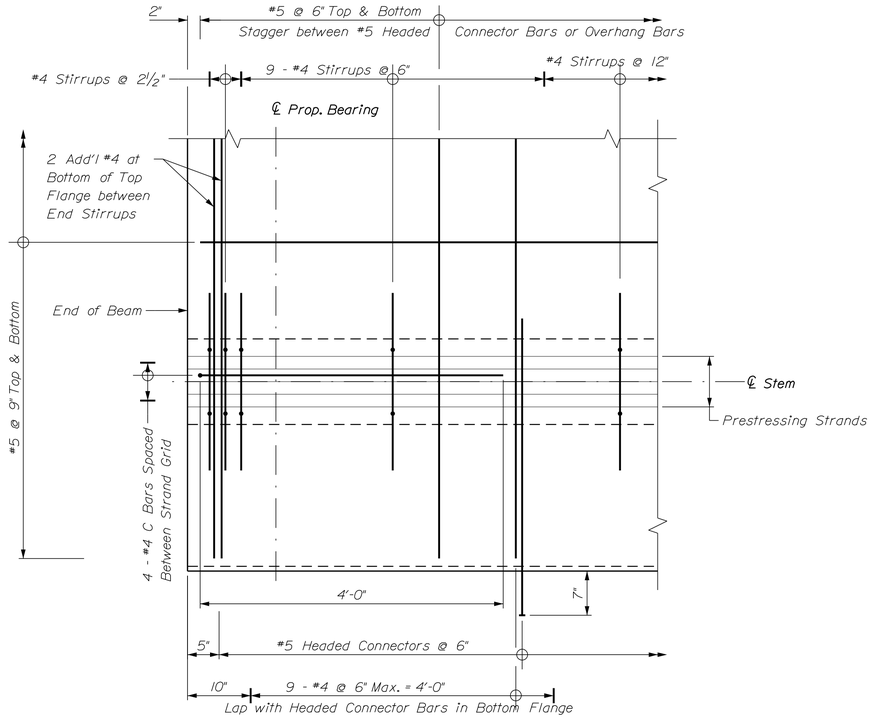

NEXT BEAM PARTIAL REINFORCEMENT PLAN

(Reinforcing Symmetrical about ℄)

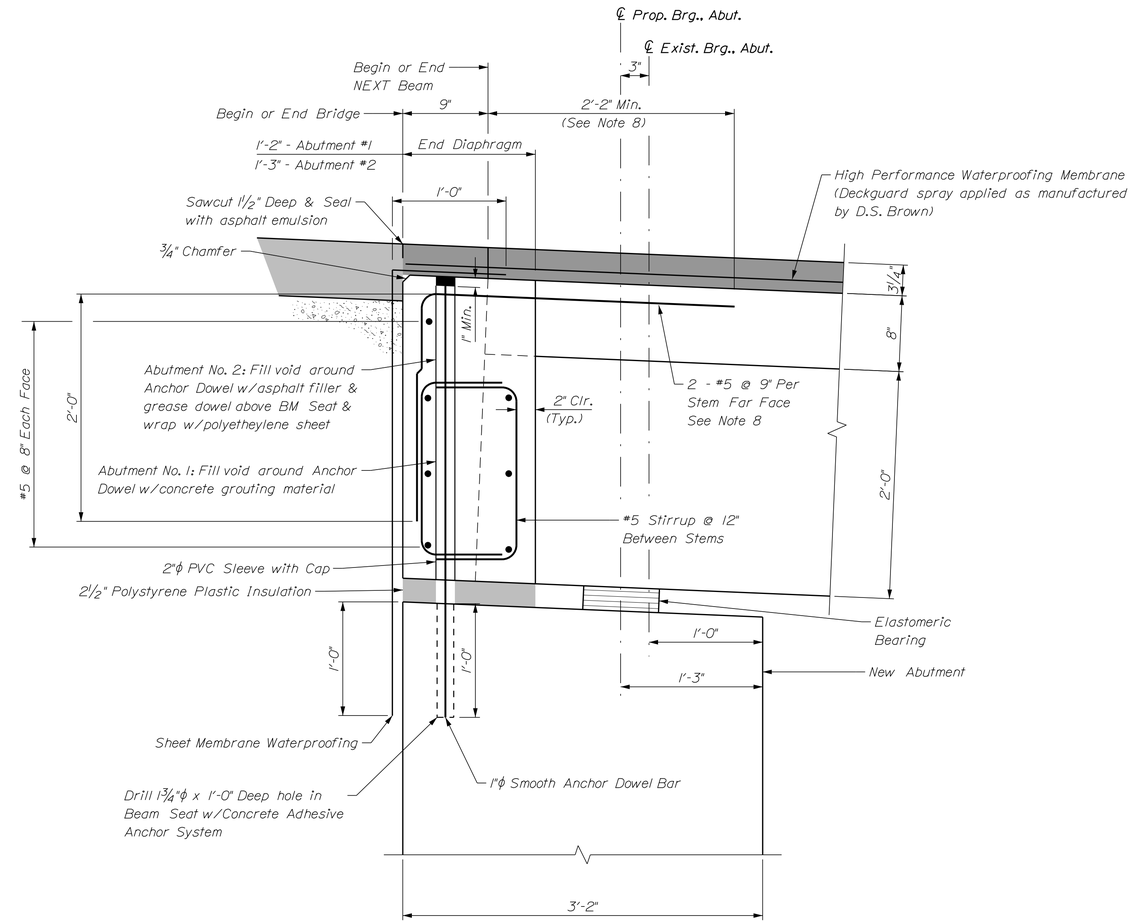

NEXT BEAM ABUTMENT SECTION

(Abutment No. 1 shown, Abutment No. 2 similar)

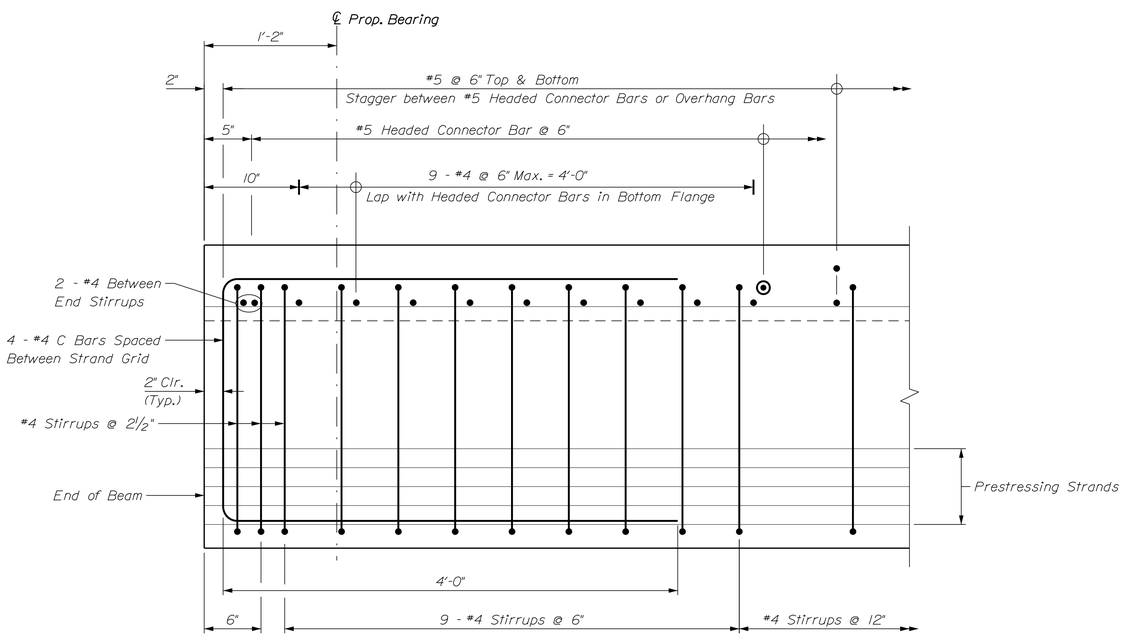

NEXT BEAM PARTIAL REINFORCEMENT ELEVATION

(Reinforcing Symmetrical about ℄)

SUPERSTRUCTURE NOTES

1. NEXT D Beams are a non-proprietary shape developed by PCI NORTHEAST (PCINE). Standardized section properties and details may be found at http://www.pcine.org.

2. Design Values:
   a) Prestressing strands shall be 0.6" diameter and shall meet the requirements of Special Provision 535, Precast, Prestressed Concrete Superstructure
   b) Estimated camber at release: 2 7/16"
   c) Tensioning force for fully tensioned strands: 44kips per strand
   d) Tensioning force for nominally tensioned strands: 5kips per strand

3. Reinforcing steel shall have a minimum concrete cover of two inches unless otherwise noted and shall meet the requirements of Special Provision Section 503, Reinforcing Steel.

4. The drilling of holes in the prestressed beams and the use of power actuated tools on the beams will not be permitted.

5. Payment for the cast-in-place closure pours will be made under Item No. 502.492, Structural Concrete Curb and Sidewalk, Class "A". Reinforcing shall meet the requirements of Special Provision Section 503, Reinforcing Steel. Payment will be made under Item No. 502.492.

6. Surfaces of the NEXT Beams in contact with closure pour concrete shall be sandblasted prior to delivery and power washed with water prior to erection of the beams.

7. Method of forming flange connection shall be determined by the Contractor. The forms shall be removable and able to accommodate differential camber. Form supports shall not penetrate through the top of pour or NEXT Beam unless approved by the Engineer.

8. Extend 2 - No. 5 bars above each stem from top flange reinforcing beyond end of NEXT Beam and a minimum of 2 feet into backwall. Bars can lap to longitudinal bars or may be extensions of #5 @ 9" in the top flange.

9. Payment for 2½ inch Polystyrene Plastic Insulation will be made under Item 653.222.

10. Apply one layer of sheet membrane waterproofing at NEXT Beam ends and spray applied waterproofing membrane on top of NEXT Beams in accordance with Section 508 of the Standard Specifications.

11. Top of precast NEXT Beam shall have a float finish per Special Provision 535.

12. For drilling and anchoring rods size ⅞-in. diameter or greater, the anchoring material shall be chosen from the MaineDOT prequalified list and shall be submitted to the Resident for approval.

ERDMAN ANTHONY

STATE OF MAINE
DEPARTMENT OF TRANSPORTATION

BR-1823(400)X

WIN 18234.00

BRIDGE NO. 3836

BRIDGE PLANS

		BY	DATE
PROJ. MANAGER	STEPHEN BOOGE II		
DESIGN-DETAILED	C. SICHAK	T. LINDO	10/2014
CHECKED-REVIEWED	F. DAHAR		
DESIGN2-DETAILED2			
DESIGN3-DETAILED3			
REVISIONS 1			
REVISIONS 2			
REVISIONS 3			
REVISIONS 4			
FIELD CHANGES			

SIGNATURE

P.E. NUMBER

DATE

WESTERN AVENUE BRIDGE
MESSALONSKEE STREAM
WATERVILLE KENNEBEC COUNTY

BEAM DETAILS
(3 OF 4)

SHEET NUMBER

23

OF 36

Filename: ...\023_Precast Next Beams-3.dgn Division: BRIDGE Username: Date:10/15/2014

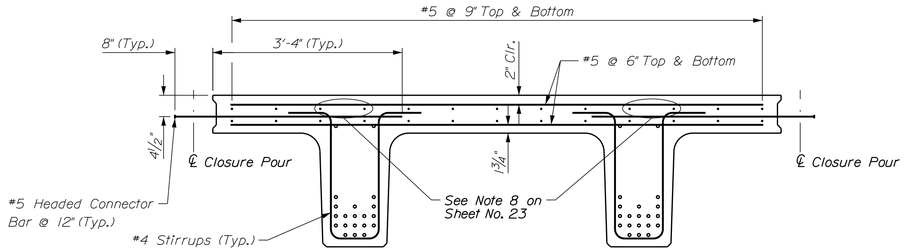

NEXT BEAM TYPICAL REINFORCEMENT

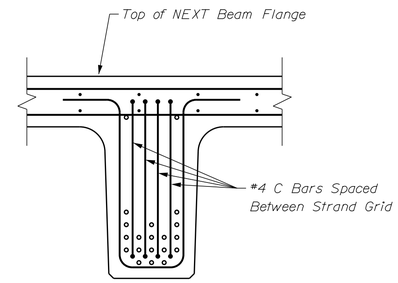

NEXT BEAM TYPICAL END VIEW

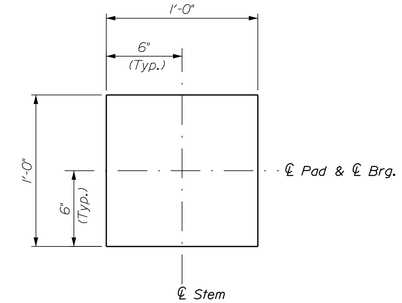

PLAN

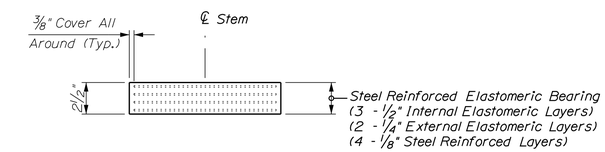

ELEVATION

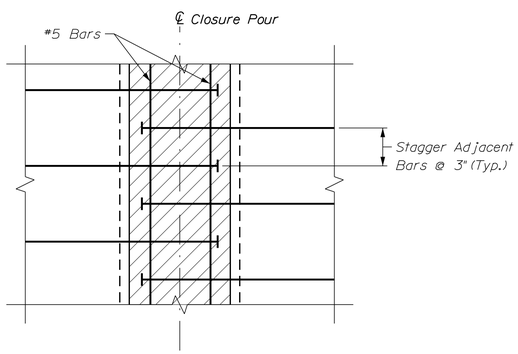

CLOSURE POUR PLAN

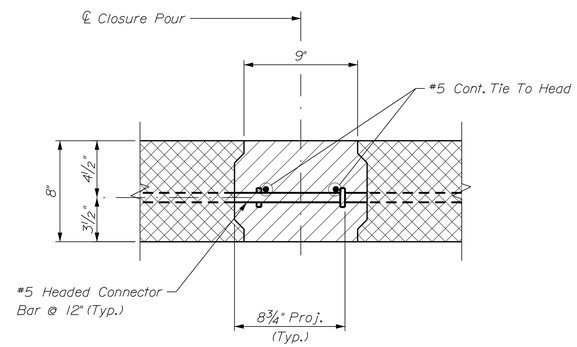

CLOSURE POUR DETAIL

ELASTOMERIC BEARING NOTES

1. The shear modulus of the elastomer shall be between 100 and 130 psi.
2. Bearings shall be covered during transit.
3. The bearings are designed so that the superstructure may be erected when the ambient air temperature is within the range of 65°F and 90°F. If the ambient air temperature is outside this range, the bearings shall be reset as directed by the Resident.
4. All bearings shall be marked prior to shipping. The marks shall include the bearing location on the bridge and a direction arrow that points up-station. All marks shall be permanent and shall be visible after the bearing is installed.
5. The Contractor is advised to have galvanized steel shims available to use for elevation adjustments upon setting the NEXT beams. The shims shall be included under Item No. 523.5402, Laminated Elastomeric Bearings, Expansion.

BEARING DESIGN LOADS AND MOVEMENTS

Brg. Type	VERTICAL REACTIONS (kips)			Horiz. Load - Long. (kips)	Horiz. Load - Trans. (kips)	DESIGN MOVEMENTS (in.)	
	Dead Load	Live Load	Total			Long.	Trans.
Exp.	35.4	36.7	72.1	2.05	–	0.33	–

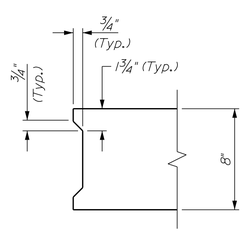

SHEAR KEY DETAIL

LEGEND

Cast-in-Place Concrete

Pre-Cast Concrete

ERDMAN ANTHONY

STATE OF MAINE
DEPARTMENT OF TRANSPORTATION

BR-1823(400)X

WIN 18234.00

BRIDGE NO. 3836

BRIDGE PLANS

		BY	DATE
PROJ. MANAGER	STEPHEN BROOE II		
DESIGN-DETAILED	C. SICHAK	T. LINDO	10/2014
CHECKED-REVIEWED	F. DAHAR		
DESIGN2-DETAILED2			
DESIGN3-DETAILED3			
REVISIONS 1			
REVISIONS 2			
REVISIONS 3			
REVISIONS 4			
FIELD CHANGES			

SIGNATURE

P.E. NUMBER

DATE

WESTERN AVENUE BRIDGE
MESSALONSKEE STREAM
WATERVILLE KENNEBEC COUNTY

BEAM DETAILS
(4 OF 4)

SHEET NUMBER
24
OF 36

Filename: ...\024_Precast Next Beams-4.dgn Division: BRIDGE Username: Date:10/15/2014

STRAIGHT BARS

MARK	QTY.	LENGTH	LOCATION
Abutment No. 1			
A500	2	1'-9"	Abutment Vertical (F.F.)
A501	9	6'-9"	Abutment Vertical (N.F.)
A502	6	6'-9"	Abutment Vertical (F.F.)
A503	1	1'-8"	Abutment Horizontal (N.F.)
A504	1	4'-1"	Abutment Horizontal (N.F.)
A505	1	2'-7"	Abutment Horizontal (N.F.)
A506	2	26'-0"	Abutment Horizontal (E.F.)
A507	25	2'-10"	Abutment Top
A508	14	7'-4"	Abutment Horizontal (E.F.)
A509	2	3'-0"	Retaining Wall Horizontal (E.F.)
A510	2	9'-9"	Retaining Wall Horizontal (E.F.)
A511	2	9'-6"	Retaining Wall Horizontal (E.F.)
A512	2	12'-0"	Retaining Wall Horizontal (E.F.)
A800	1	5'-11"	Abutment Top Longitudinal
A801	5	36'-5"	Abutment Top Longitudinal
Abutment No. 2			
B500	8	3'-11"	Abutment Vertical Dowels (N.F.)
B501	4	1'-11"	Abutment Vertical Dowels (E.F.)
B502	5	3'-5"	Abutment Vertical Dowels (N.F.)
B503	6	3'-10"	Abutment Vertical Dowels (F.F.)
B504	4	3'-4"	Abutment Vertical Dowels (F.F.)
B505	8	6'-1"	Abutment Horizontal (E.F.)
B506	1	2'-4"	Abutment Horizontal
B507	8	3'-2"	Abutment Horizontal (E.F.)
B508	2	26'-0"	Abutment Horizontal (E.F.)
B509	26	2'-10"	Abutment Top
B800	5	37'-8"	Abutment Top Longitudinal
Sidewalk/Curb			
C506	7	60'-0"	Sidewalk Longitudinal
C507	3	60'-0"	Curb Longitudinal
MARK	QTY.	LENGTH	LOCATION

BENT BARS

MARK	QTY.	LENGTH	TYPE	A	B	C	D	E	F	G	H	O	R	LOCATION
Abutment No. 1														
A550	3	3'-5"	C	7"	2'-10"									Abutment Horizontal Dowels
A551	25	2'-6"	C	7"	1'-11"									Abutment Vertical Dowels (N.F.)
A552	15	3'-10"	C	7"	3'-3"									Abutment Vertical Dowels (E.F.)
A553	3	8'-2"	V				2'-6"	2'-10"			2'-10"			Abutment Vertical
A554	2	7'-5"	V				1'-9"	2'-10"			2'-10"			Abutment Vertical
A555	3	2'-3"	C	7"	1'-8"									Abutment Vertical Dowels (F.F.)
A556	17	2'-4"	C	7"	1'-10"									Abutment Vertical Dowels (F.F.)
A557	9	4'-10"	S	0'-0"	1'-0"	2'-10"	1'-0"			0'-0"				Abutment Top
A558	4	3'-10"	S	0'-0"	1'-2"	1'-6"	1'-2"			0'-0"				Utility Blockout
A559	4	6'-3"	S	0'-0"	2'-0"	2'-3"	2'-0"			0'-0"				Utility Blockout
A560	22	2'-11"	C	7"	2'-4"									Retaining Wall Vertical Dowels
Abutment No. 2														
B550	23	3'-10"	C	7"	3'-3"									Abutment Vertical Dowels (E.F.)
B551	8	2'-8"	C	7"	2'-1"									Abutment Vertical Dowels (N.F.)
B552	22	2'-4"	C	7"	1'-9"									Abutment Vertical Dowels (N.F.)
B553	3	2'-7"	C	7"	2'-0"									Abutment Vertical Dowels (F.F.)
B554	15	2'-3"	C	7"	1'-8"									Abutment Vertical Dowels (F.F.)
B555	4	6'-3"	S	0'-0"	2'-0"	2'-3"	2'-0"			0'-0"				Utility Blockout
B556	4	3'-10"	S	0'-0"	1'-2"	1'-6"	1'-2"			0'-0"				Utility Blockout
B557	4	4'-11"	S	0'-0"	1'-7"	1'-8"	1'-7"			0'-0"				Utility Blockout
B558	15	4'-10"	S	0'-0"	1'-0"	2'-10"	1'-0"			0'-0"				Abutment Top
MARK	QTY.	LENGTH	TYPE	A	B	C	D	E	F	G	H	O	R	LOCATION

TYPE - BENDING DIAGRAMS

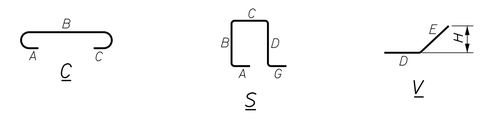

All dimensions are out-to-out of bar.

Bending details and hooks shall conform to the recommendations of the current revision of ACI Standard 318.

Reinforcing Bar: ASTM A615/A615M, Grade 420

GENERAL NOTES

1. The first two digits following the letter(s) of the mark indicate the size ofthe bar:

   Mark "A1602" = bar size #16
   Mark "P2501" = bar size #25
   Mark "S1950" = bar size #19

2. Each crank bar, Type B, may be replaced by two (2) straight bars (one top and one bottom) of the same bar size as the crank bar. Payment in either case shall be based on crank bars as schedule on the plans.

ERDMAN ANTHONY

STATE OF MAINE
DEPARTMENT OF TRANSPORTATION

BR-1823(400)X

WIN 18234.00

BRIDGE NO. 3836

BRIDGE PLANS

PROJ. MANAGER	STEPHEN BOOZE II	BY	DATE
DESIGN-DETAILED	C. SICHAK	T. LINDO	10/2014
CHECKED-REVIEWED	F. DAHAR		
DESIGN2-DETAILED2			
DESIGN3-DETAILED3			
REVISIONS: 1			
REVISIONS: 2			
REVISIONS: 3			
REVISIONS: 4			
FIELD CHANGES			

SIGNATURE

P.E. NUMBER

DATE

WESTERN AVENUE BRIDGE
MESSALONSKEE STREAM
WATERVILLE KENNEBEC COUNTY

REINFORCING SCHEDULE

SHEET NUMBER

25

OF 36

Filename: ...\025_Reinforcing Schedule.dgn Division: BRIDGE Username: Date:10/15/2014

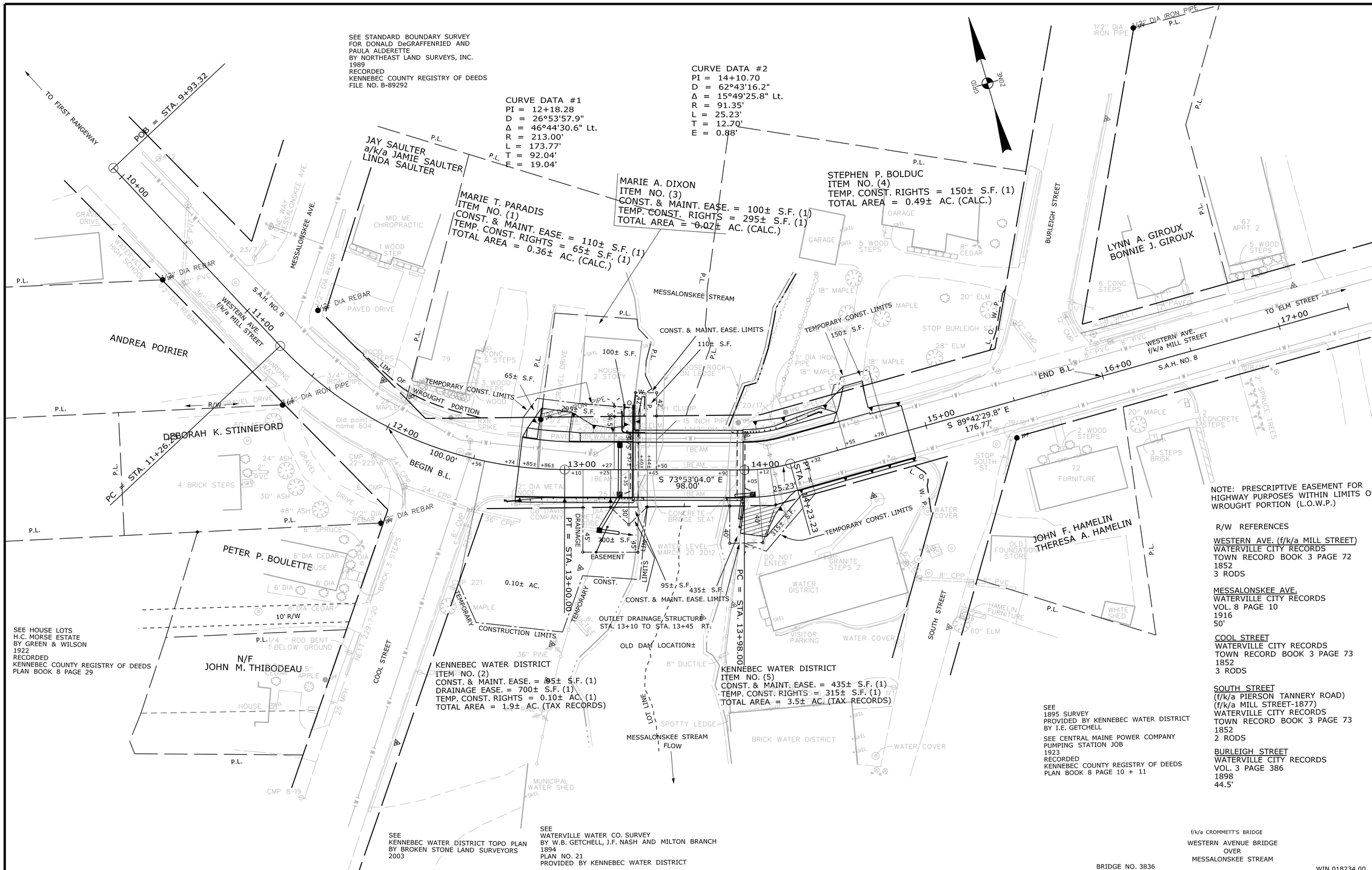

NOTE: PRESCRIPTIVE EASEMENT FOR HIGHWAY PURPOSES WITHIN LIMITS OF WROUGHT PORTION (L.O.W.P.)

R/W REFERENCES

WESTERN AVE. (f/k/a MILL STREET)
WATERVILLE CITY RECORDS
TOWN RECORD BOOK 3 PAGE 72
1852
3 RODS

MESSALONSKEE AVE.
WATERVILLE CITY RECORDS
VOL. 8 PAGE 10
1916
50'

COOL STREET
WATERVILLE CITY RECORDS
TOWN RECORD BOOK 3 PAGE 73
1852
3 RODS

SOUTH STREET
(f/k/a PIERSON TANNERY ROAD)
(f/k/a MILL STREET-1877)
WATERVILLE CITY RECORDS
TOWN RECORD BOOK 3 PAGE 73
1852
2 RODS

BURLEIGH STREET
WATERVILLE CITY RECORDS
VOL. 3 PAGE 386
1898
44.5'

f/k/a CROMMETT'S BRIDGE
WESTERN AVENUE BRIDGE
OVER
MESSALONSKEE STREAM

BRIDGE NO. 3836

WIN 018234.00

SYMBOLS

- IP or ●IPF (IRON PIPE or PIN FOUND)
- ST. (SEPTIC TANK)
- BM (ROW MONUMENT)
- BM (TRAVERSE POINT)
- WELL (WELL)
- BREAKING LIMIT LINE
- CONSTRUCTION LIMIT LINE
- PROPERTY LINE
- LIMITS OF WROUGHT PORTION (L.O.W.P.)
- EXISTING RIGHT OF WAY
- NEW RIGHT OF WAY
- NEW ROW WITHIN EXIST. ROW
- CONTROL OF ACCESS
- WATER LINE
- GAS LINE
- ELECTRIC LINE
- TELEPHONE LINE
- SEWER LINE

ITEM	TECH	CHECKED
BASE MAP		
EXIST. R/W	D.W.B.	
PROP. LINES	D.W.B.	
AREAS	D.W.B.	P.N.S.

STATE OF MAINE
DEPARTMENT OF TRANSPORTATION
16 STATE HOUSE STATION - AUGUSTA, ME 04333-0016

WATERVILLE
RIGHT OF WAY MAP

REVISIONS

NO.	DATE	DESCRIPTION	BY

PLAN FILED IN PLAN BOOK PAGE COUNTY RECORD

NO.	GRANTOR	INSTRUMENT	DATE	BOOK	PAGE
		COND.	9/15/14	11795	41

DAVID BERNHARDT
COMMISSIONER
JOYCE NOEL TAYLOR
CHIEF ENGINEER

DATE

STATE AID HIGHWAY NO. 8
WESTERN AVENUE f/k/a MILL STREET
WATERVILLE KENNEBEC COUNTY
FEDERAL AID PROJECT NO. BH-1823(400)X

JULY 2014 | RIGHT-OF-WAY MAP | D.O.T. FILE NO. 6-453
SCALE 1" = 25' | SHEET 1 OF 1

SHEET NUMBER
26
OF 36

Filename: ...\00\ROW\MSTA\001_RWPLAN1.dgn Division: BRIDGE Username: David.Show Date:10/8/2014

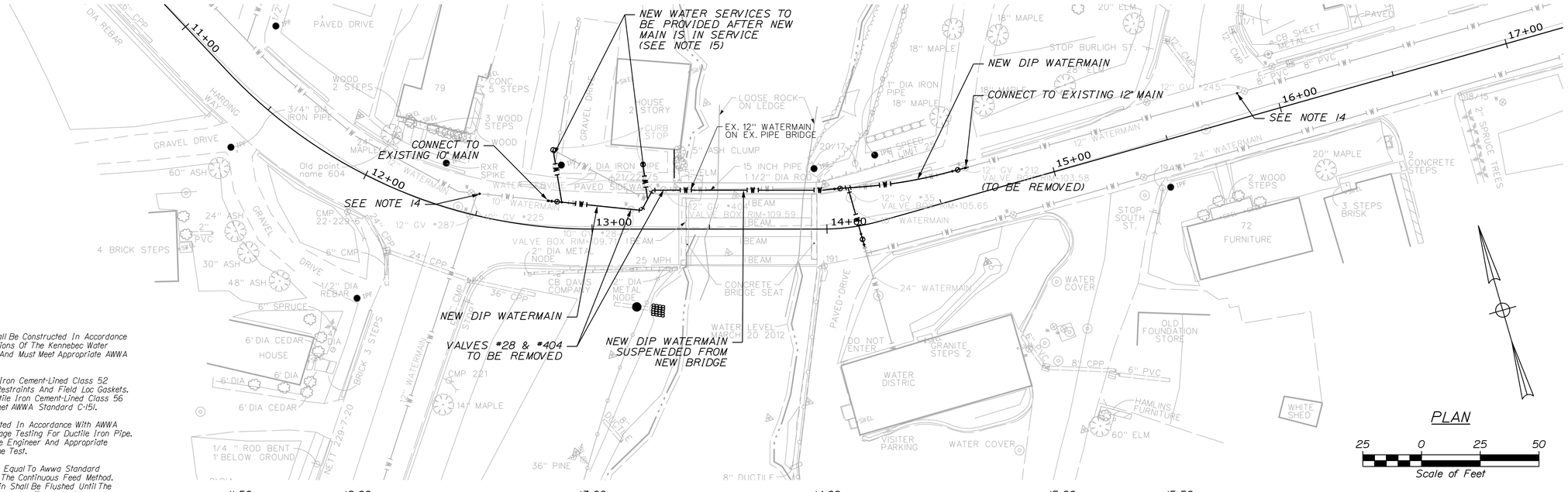

PLAN

25 0 25 50
Scale of Feet

WATER MAIN NOTES:

1. Water Mains And Appurtenances Shall Be Constructed In Accordance With The Regulations And Specifications Of The Kennebec Water District, State Department Of Health, And Must Meet Appropriate AWWA Standards.
2. Buried Water Main Shall Be Ductile Iron Cement-Lined Class 52 Push-on Pipe With Grip Ring Pipe Restraints And Field Loc Gaskets. Suspended Water Main Shall Be Ductile Iron Cement-Lined Class 56 With Push On Joints. All Dip Shall Meet AWWA Standard C-151.
3. Water Main(S) Shall Be Pressure Tested In Accordance With AWWA Standard C-600 For Pressure/Leakage Testing For Ductile Iron Pipe. Test Pressure Shall Be 200 Psi. The Engineer And Appropriate Municipal Inspectors Must Witness The Test.
4. The Water Main Shall Be Disinfected Equal To Awwa Standard Specifications, Designation C-651, By The Continuous Feed Method. Following Disinfection, The Water Main Shall Be Flushed Until The Chlorine Concentration In The Water Leaving The Main Is No Higher Than That Generally Prevailing In The System. The Sampling Point(S) Shall Be Decontaminated By Flaming. After Flushing And Disinfecting The Water Main, Water Samples Will Be Collected From The Main By The Water Purveyor. Fire Hydrants Are Not Acceptable Sampling Points. Written Approval And Notification From The Kennebec Water District Must Be Received Before The Main Is Placed In Service. The Engineer And Appropriate Municipal Inspectors Must Receive At Least 48-Hour Advance Notification Requesting Sampling Services. The Water Purveyor Will Collect Samples For Free Chlorine Residual, Total And Fecal Coliform And 24-Hour Bacterial Plate Count. All Water Main And Fittings Not Receiving 24-Hour Chlorine Disinfection Contact Time Must Be Swab Disinfected 30-60 Minutes Prior To Installation Using A 5% Sodium Hypochlorite Solution.
5. Water Mains And All Water Service Lines Shall Have A Minimum Of 6' Of Cover From Finished Grade Where Possible.
6. Minimum Vertical Separation Between Water Main And Sewer Main Shall Be 18" Measured From The Outside Of The Pipes At The Point Of Crossing. At Crossings, One Full Length Of Water Main Shall Be Centered Under Or Over The Sewer So That Both Joints Will Be As Far From The Sewer As Possible. Where A Water Main Crosses Under A Sewer, Adequate Structural Support (Compacted Select Fill) Shall Be Provided For The Sewer To Prevent Excessive Deflection Of Joint And Settling On And Breaking The Water Mains. Minimum Horizontal Separation Between Water Mains And Sewer Mains Shall Be 10' Measured From The Outside Of The Pipes. When This Condition Cannot Be Met, The Water Mains And Sewer Mains Shall Be Constructed In Separate Trenches And The Sewer Main Shall Be Waterworks Grade And Pressure Tested To Ensure Water Tightness.
7. Fittings (Tees, Bends, Plugs, Reducers, Etc.) Noted On The Plans Shall Include A Restraining Device System.
8. During Construction, All Open Pipes Ends Shall Be Covered In A Water-Tight Manner Using Temporary Caps, Plugs Or Double-Layered Plastic Sheeting.
9. The Excavation Water Level Shall Be Kept A Minimum Of 12" Below The Water Main Invert During Installation.
10. Temporary Water Source Shall Be Provided From The Existing Main For Flushing And Testing Of The New Main.
11. Water Pipe Hangers Shall Be Provided As Shown. The Contractor Shall Submit To The Engineer For Approval Cut Sheets For All Hangers, As Well As Detailed Drawings Depicting The Layout Of The Pre-Insulated Piping, Including Special Treatment At Joints.
12. On The Bridge Crossing Each Individual Unrestraned Joint Should Be Brought Fully Home And Then, Dependant On The Ambient Temperature Conditions At The Time Of Installation, Backed Out Slightly To Provide For Anticipated Or Possible Thermal Expansion Of The Pipe Lengths.
13. No Separate Measurement Or Payment Will Be Made For Connections To, Removal And Disposal Of, Or Abandonment Of Existing Water Mains And Appurtenances Unless Specifically Noted On The Drawings. All Costs For This Work Shal Be Included In The Bid Prices For The Various Related Items In The Contract.
14. Temporary Disinfection Tap Shall Be Installed On The Existing Main And Coordinated With The Health Department.
15. The Kennebec Water District Will Establish Two Temporary Water Services Prior To The Start Of Construction. Establishment Of New Water Services, By The Contractor, Shall Be Coordinated With The Kennebec Water District.

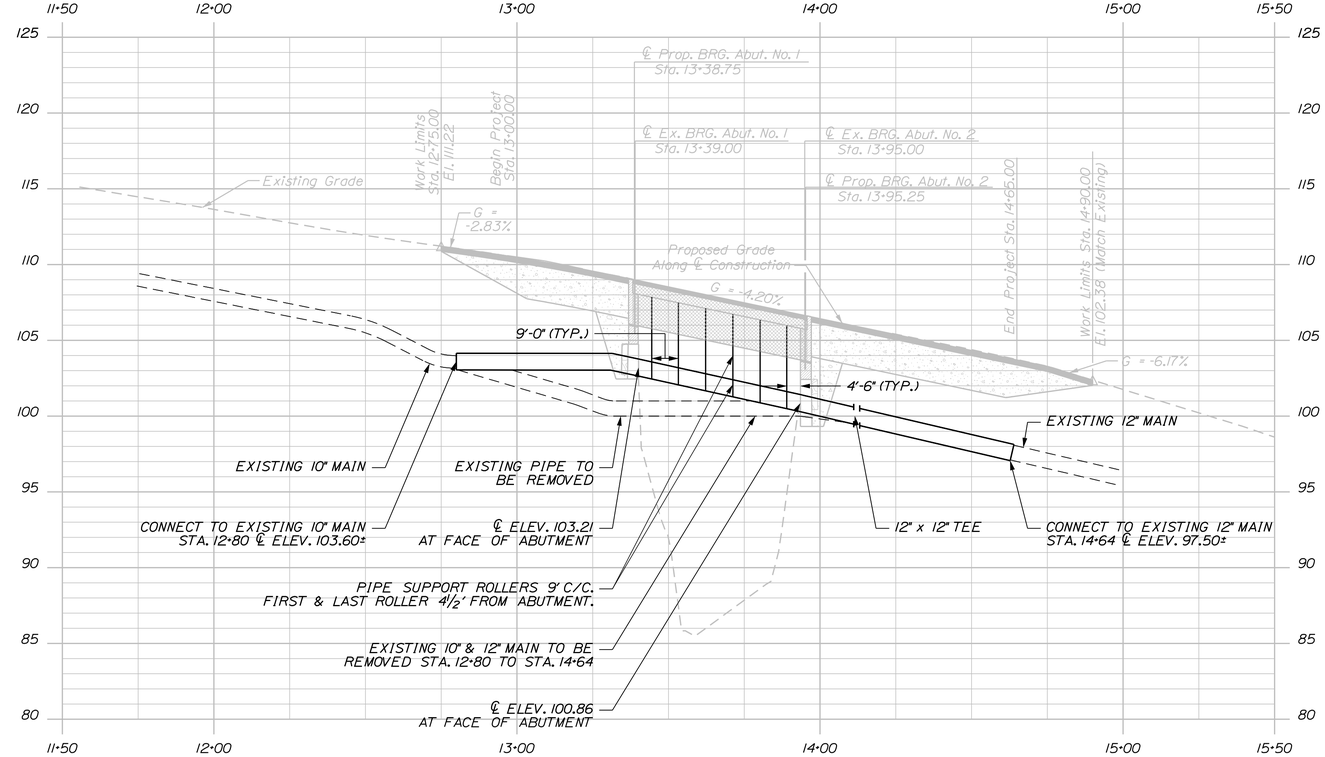

PROFILE

HOR. 25 0 25 50
VER. 5 0 5 10
Scale

REV.	DESCRIPTION	DATE	BY

DESIGNED BY: MDW
DWN BY: JAJ
CKD BY: FAD
SUBMITTED BY:
DATE: 10/15/2014
PROJECT NO.: 100YJ93
PLOT SCALE: AS NOTED
PLOT DATE: 10/15/2014
FILE NAME:

Kennebec Water District
P.O. BOX 356, 6 COOL STREET, WATERVILLE, MAIN 04903-0356

KENNEBEC WATER DISTRICT
WESTERN AVENUE BRIDGE WATERMAIN REPLACEMENT
WATERVILLE KENNEBEC COUNTY
UTILITY PLAN & PROFILE

ERDMAN ANTHONY

STATE OF MAINE
FRANCIS A. DAHAR
No. 8322
LICENSED
PROFESSIONAL ENGINEER

W - 1
of 1

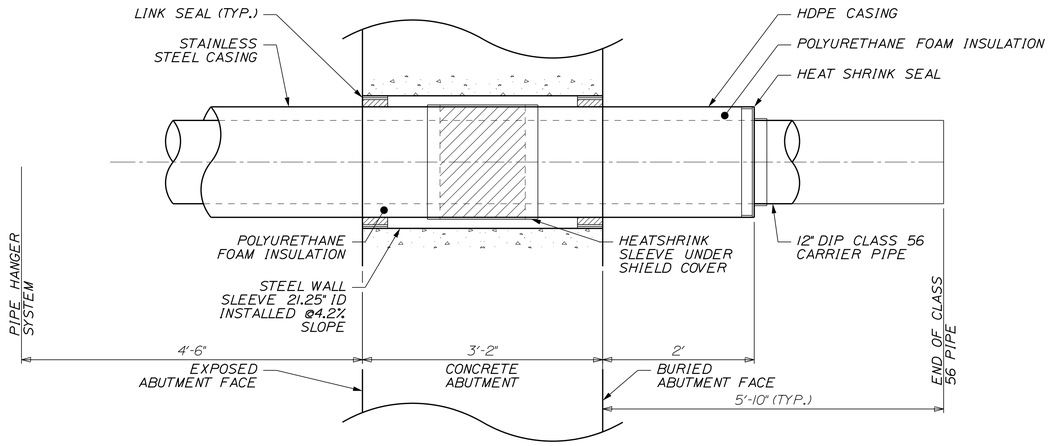

DETAIL AT ABUTMENTS

N.T.S

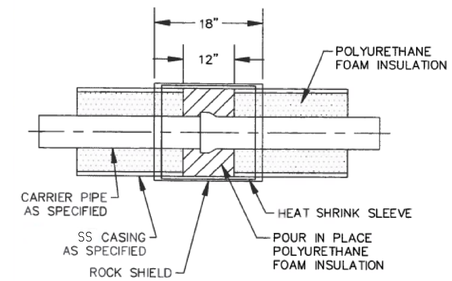

DUCTILE IRON POUR-IN-PLACE FIELD JOINT DETAIL WITH SS CASING

N.T.S.

INSTALLATION PROCEDURE

1) Hydrostatically test all joints as required.
2) Shrink wrap the ductile iron joint.
3) Place HDPE pour mold over field joint. Inside of foaming mold must be lubricated to remove mold after insulating the joint.
4) Measure quantities of 'A' and 'B' foam components (see chart) and pour into separate containers.
5) Pour measured quantity of part 'A' into measured quantity of part 'B'.
6) Mix rapidly for 10–15 seconds and pour material into hole in the PVC sleeve. (MIXING TIME MAY VERY DUE TO WEATHER CONDITIONS) temporarily seal hole with duct tape to contain foam, once foam has reacted remove tape to ensure entire cavity is full of insulation add if necessary.
7) After the material has reacted and completely filled the annular space between the pipe and pour mold, trim off excess material, then remove pour mold.
8) Apply heat shrinkable sleeve see installation sheet then apply rock shield.

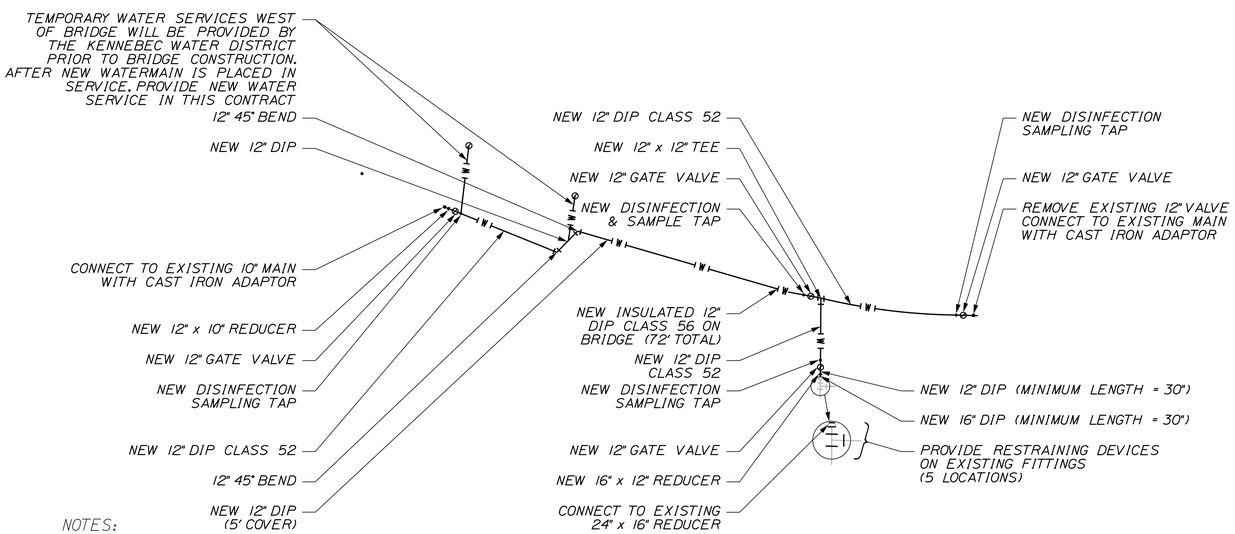

NOTES:

1. ALL BURIED PIPING SHALL HAVE RESTRAINED JOINTS.

2. EXISTING WATERMAIN PIPE AND APURTENANCES WITHIN THE LIMITS OF THE NEW WATERMAIN CONSTRUCTION ARE TO BE REMOVED AND DISPOSED OF OFFSITE BY THE CONTRACTOR.

PLAN - WATER MAIN ONLY

SCALE - 1" = 25'

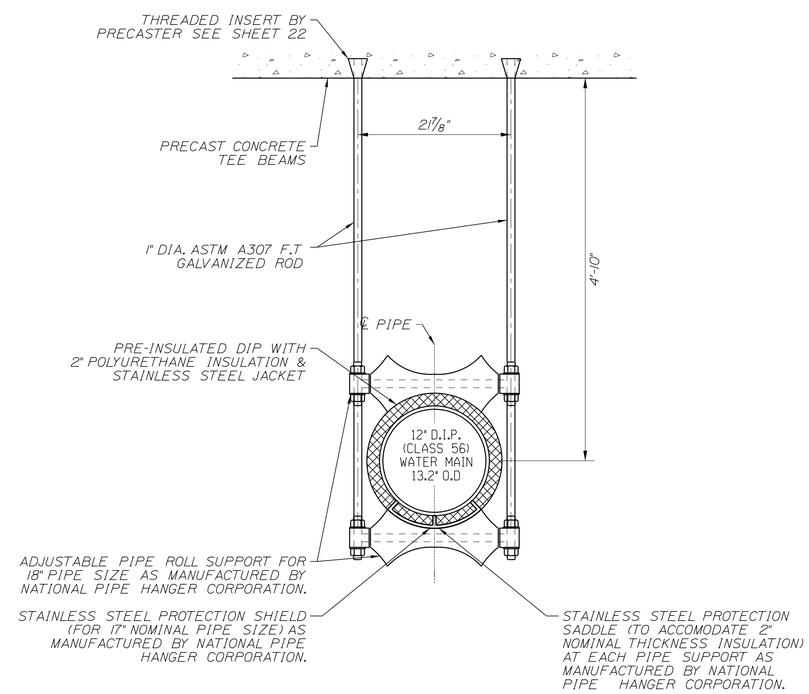

TYPICAL PIPE SUPPORT DETAIL

N.T.S.

REV.	DESCRIPTION	DATE	BY

DESIGNED BY: MDW
DATE: 10/15/2014
DWN BY: JAJ
CKD BY: FAD
PROJECT NO.: 100V.93
SUBMITTED BY:
PLOT SCALE: AS NOTED
PLOT DATE: 10/15/2014
FILE NAME:

Kennebec Water District
P.O. BOX 356, 6 COOL STREET, WATERVILLE, MAIN 04903-0356

KENNEBEC WATER DISTRICT
WESTERN AVENUE BRIDGE WATERMAIN REPLACEMENT
WATERVILLE KENNEBEC COUNTY
UTILITY DETAILS

ERDMAN ANTHONY

STATE OF MAINE FRANCIS A. DAHLAR No. 8322 LICENSED PROFESSIONAL ENGINEER

W - 2 of 2

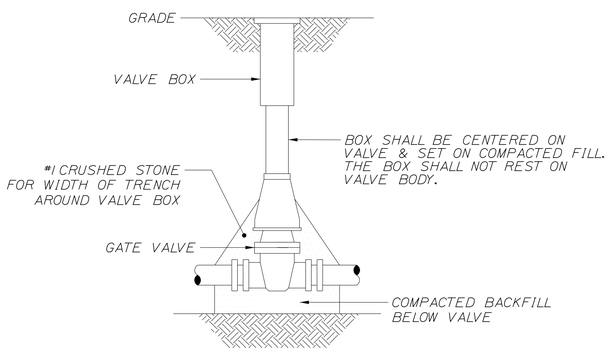

GATE VALVE DETAIL
N.T.S.

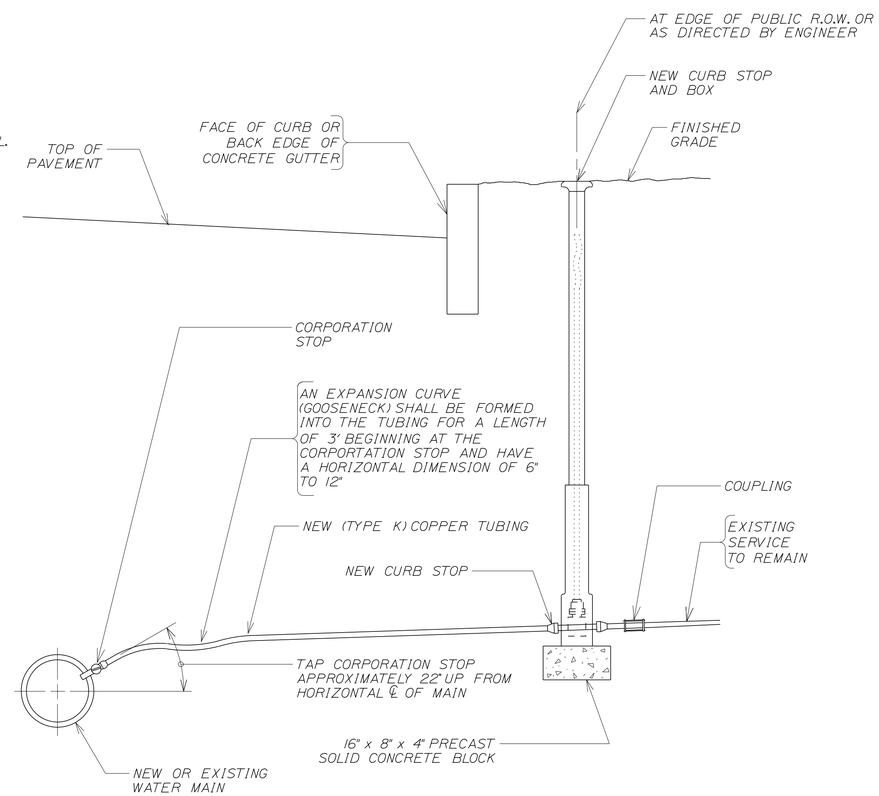

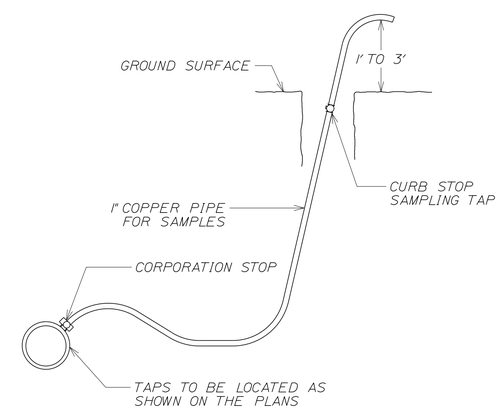

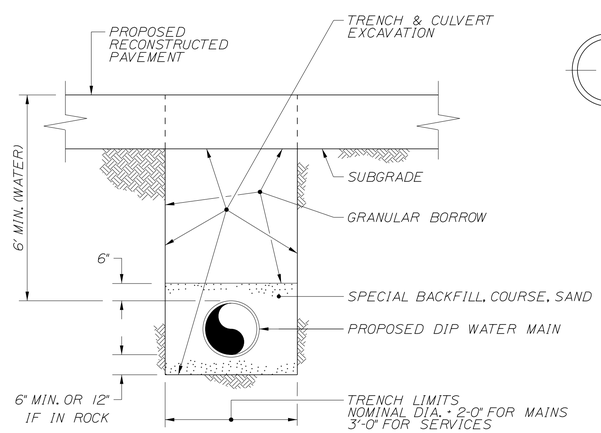

WATER MAIN TRENCH
N.T.S.

NOTES:

1. SERVICES SHALL HAVE A MINIMUM COVER OF 6 FEET.
2. THE SERVICE TAP SHALL BE MADE ON THE SIDE OF THE MAIN FACING THE CUSTOMER.
3. THE SERVICE SHALL RUN PERPENDICULAR TO THE MAIN.
4. SERVICES LARGER THAN 1 INCH SHALL HAVE A CURB BOX ARCH BASE ADDED TO THE CURB BOX.

NEW WATER SERVICE (3/4" TO 2")
N.T.S.

NOTES:

1. WHEN LOCATED IN PAVEMENT, TAP IS TO BE KEPT BELOW GROUND SURFACE EXCEPT WHEN IN USE. UPON NOTIFICATION OF ACCEPTABLE SAMPLE RESULTS, CORPORATION STOP IS TO BE CLOSED, AND TAP AND TUBING DISCONNECTED.
2. TAP MAY BE LOCATED AT THE SAME LOCATION OF A NEW WATER SERVICE. AFTER SAMPLE IS APPROVED, COPPER TUBING TO THE SURFACE IS TO BE REMOVED.
3. LOCATION OF TAP IS SUBJECT TO PRIOR APPROVAL OF THE KENNEBEC WATER DISTRICT.
4. MAXIMUM DISTANCE BETWEEN DISINFECTION/SAMPLING TAPS ON NEW WATER MAIN INSTALLATION IS 1000 FEET.

DISINFECTION SAMPLING TAP
N.T.S.

REV.	DESCRIPTION	DATE	BY

DESIGNED BY: MDW
DATE: 10/15/2014
DWN BY: JAJ
CKD BY: FAD
PROJECT NO.: 100IV.93
SUBMITTED BY:
PLOT SCALE: AS NOTED
PLOT DATE: 10/15/2014
FILE NAME:

Kennebec Water District
P.O. BOX 356, 6 COOL STREET, WATERVILLE, MAIN 04903-0356

KENNEBEC WATER DISTRICT
WESTERN AVENUE BRIDGE WATERMAIN REPLACEMENT
WATERVILLE KENNEBEC COUNTY
UTILITY DETAILS

ERDMAN ANTHONY

STATE OF MAINE
FRANCIS A. DAHLAR
No. 8322
LICENSED
PROFESSIONAL ENGINEER

W - 3
of

SUMMIT UTILITIES KENNEBEC VALLEY PROJECT

WESTERN AVENUE BRIDGE CROSSING

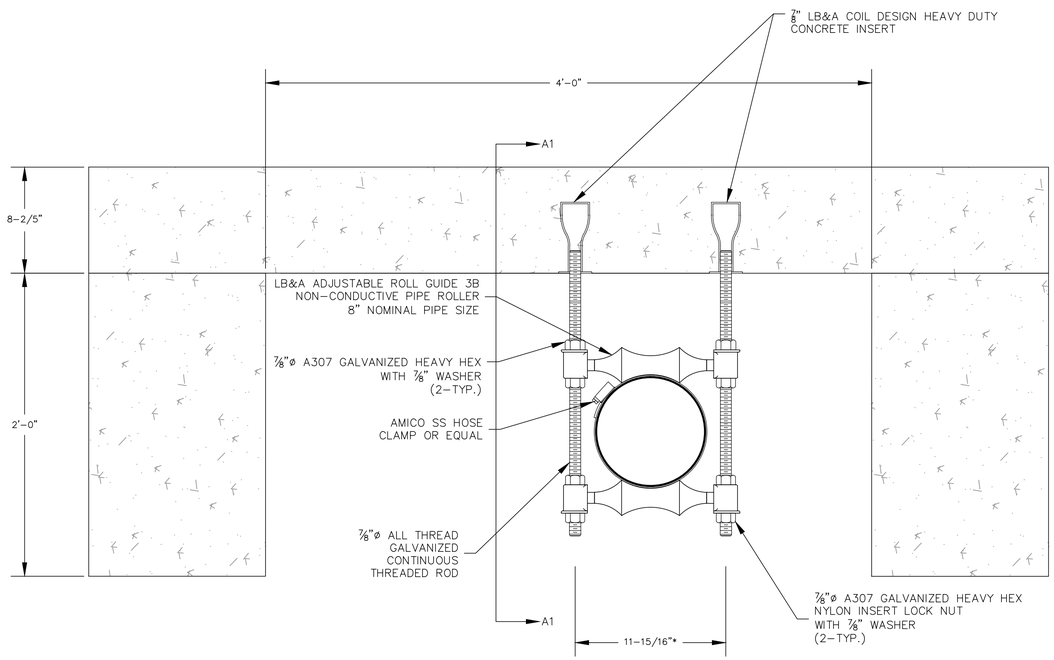

DETAIL A
PROPOSED SUPPORT SYSTEM (5-TYP.)
SPACED EVERY 10 FT
SCALE: 1"=6"

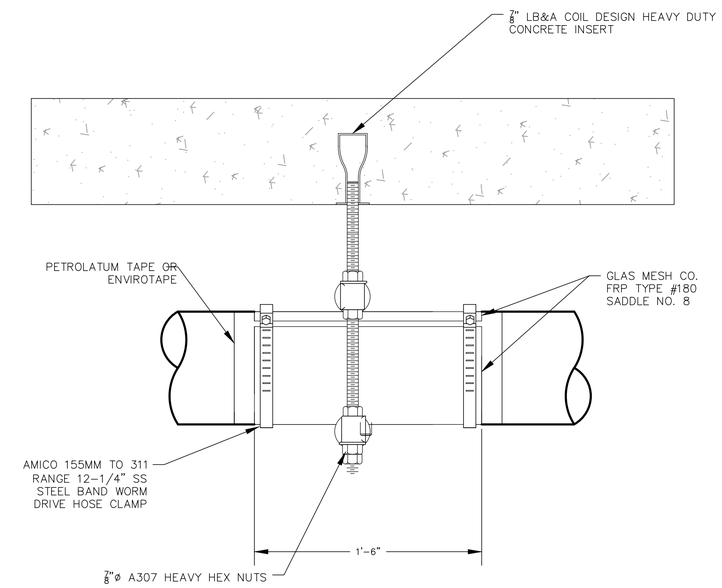

SECTION A1-A1
PROPOSED SUPPORT SYSTEM
SCALE: 1"=6"

GENERAL NOTES:

1. ADJUSTABLE ROLL GUIDE INCLUDES
   - 4 ADJUSTABLE SOCKETS
   - 2 ROLL AXLES
   - 2 VERTICAL THREADED RODS
   - 10 HEX NUTS
2. LOCATION OF PIPE SADDLE TO BE PRIMED AND WRAPPED WITH PETROLATUM TAPE OR ENVIROTAPE.
3. * AXLE LENGTHS MAY AFFECT DIMENSION. CONTACT SUPPLIER BEFORE PLACING CONCRETE INSERTS

STATE OF MAINE
PAT CONVERY
8939
LICENSED
PROFESSIONAL ENGINEER
9/19/2014

ISSUED FOR CONSTRUCTION

REV. NO.	DATE	DESCRIPTION	DRWN BY	CHK'D BY	APP'D BY
0	09/19/2014	ISSUED FOR CONSTRUCTION	MSD	PMC	

REVISIONS

Cornerstone Energy Services

DRAWN BY: MSD	DATE: 05/08/14	DRAWING SCALE: NONE	
CHECKED BY: PMC	DATE: 05/08/14		
APPROVED BY:	DATE:		
FILE NAME: WESTERN_AVENUE_BRIDGE.DWG			

SUMMIT NATURAL OF MAINE
WESTERN AVENUE BRIDGE #3836
WATERVIELL, ME

BRIDGE CROSSING DESIGN
PROPOSED SUPPORTS

G1

DWG. REV. 0

SUMMIT UTILITIES KENNEBEC VALLEY PROJECT
WESTERN AVENUE BRIDGE CROSSING

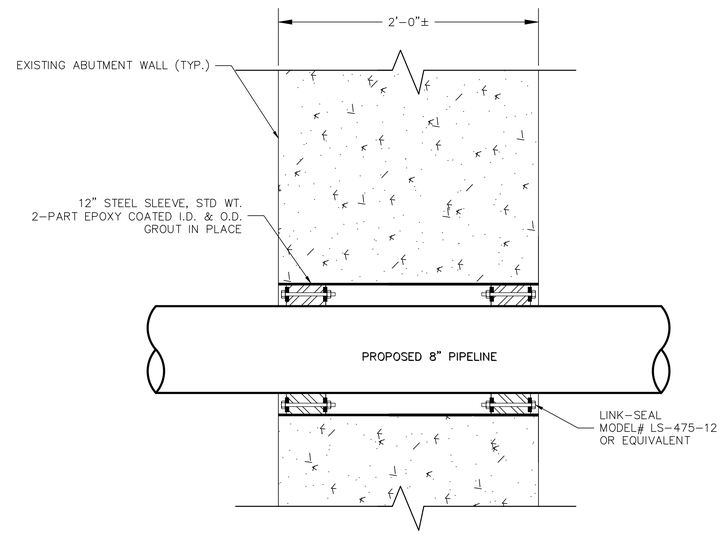

DETAIL B
ABUTMENT PENETRATION
SCALE: (NTS)

STATE OF MAINE
PAT CONVERY
8939
LICENSED
PROFESSIONAL ENGINEER
9/19/2014

ISSUED FOR CONSTRUCTION

REV. NO.	DATE	DESCRIPTION	DRWN BY	CHK'D BY	APP'D BY
0	09/19/2014	ISSUED FOR CONSTRUCTION	MSD	PMC	

REVISIONS

Cornerstone
Energy Services

DRAWN BY: MSD DATE: 05/08/14
CHECKED BY: PMC DATE: 05/08/14
APPROVED BY: DATE:
FILE NAME: WESTERN_AVENUE_BRIDGE.DWG

DRAWING SCALE: NONE

SUMMIT NATURAL OF MAINE
WESTERN AVENUE BRIDGE #3836
WATERVIELL, ME

BRIDGE CROSSING DESIGN
ABUTMENT PENETRATION

G2

DWG. REV. 0

SUMMIT UTILITIES KENNEBEC VALLEY PROJECT
WESTERN AVENUE BRIDGE CROSSING

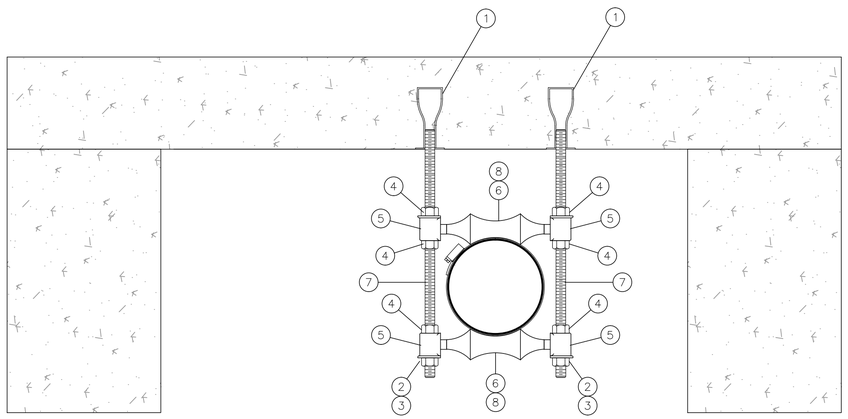

DETAIL C
PROPOSED SUPPORT SYSTEM (5-TYP.)
SPACED EVERY 10 FT
SCALE: (NTS)

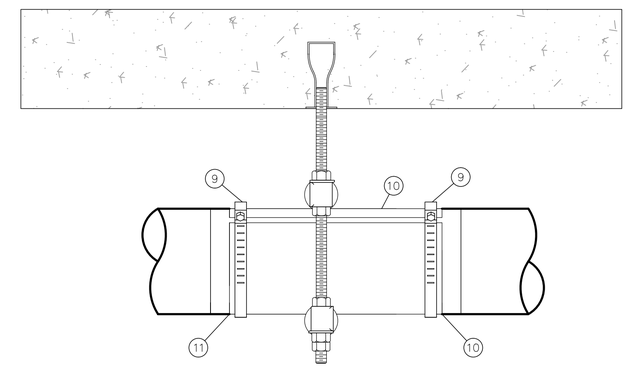

SECTION C1-C1
PROPOSED SUPPORT SYSTEM
SCALE: (NTS)

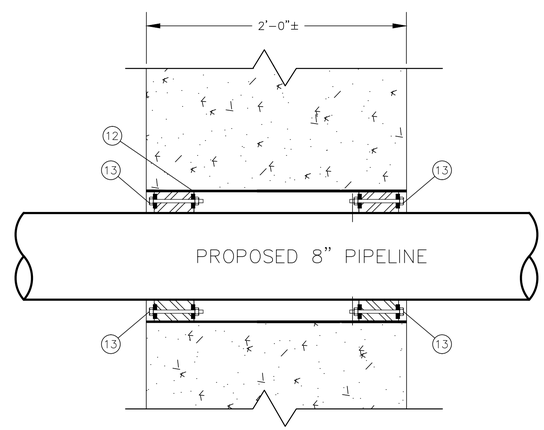

DETAIL D
ABUTMENT PENETRATION
SCALE: (NTS)

NOTES:
SEE BILL OF MATERIALS
SHEET G7

STATE OF MAINE
PAT CONVERY
8939
LICENSED
PROFESSIONAL ENGINEER
9/19/2014

ISSUED FOR CONSTRUCTION

REV. NO.	DATE	DESCRIPTION	DRWN BY	CHK'D BY	APP'D BY
0	09/19/2014	ISSUED FOR CONSTRUCTION	MSD	PMC	

REVISIONS

Cornerstone Energy Services

DRAWN BY: MSD	DATE: 05/08/14	DRAWING SCALE: NONE	
CHECKED BY: PMC	DATE: 05/08/14		
APPROVED BY:	DATE:		
FILE NAME: WESTERN_AVENUE_BRIDGE.DWG			

SUMMIT NATURAL OF MAINE
WESTERN AVENUE BRIDGE #3836
WATERVILLE, ME

BRIDGE CROSSING DESIGN
MATERIALS IDENTIFICATION

G3

DWG. REV. 0

SUMMIT UTILITIES KENNEBEC VALLEY PROJECT
WESTERN AVENUE BRIDGE CROSSING

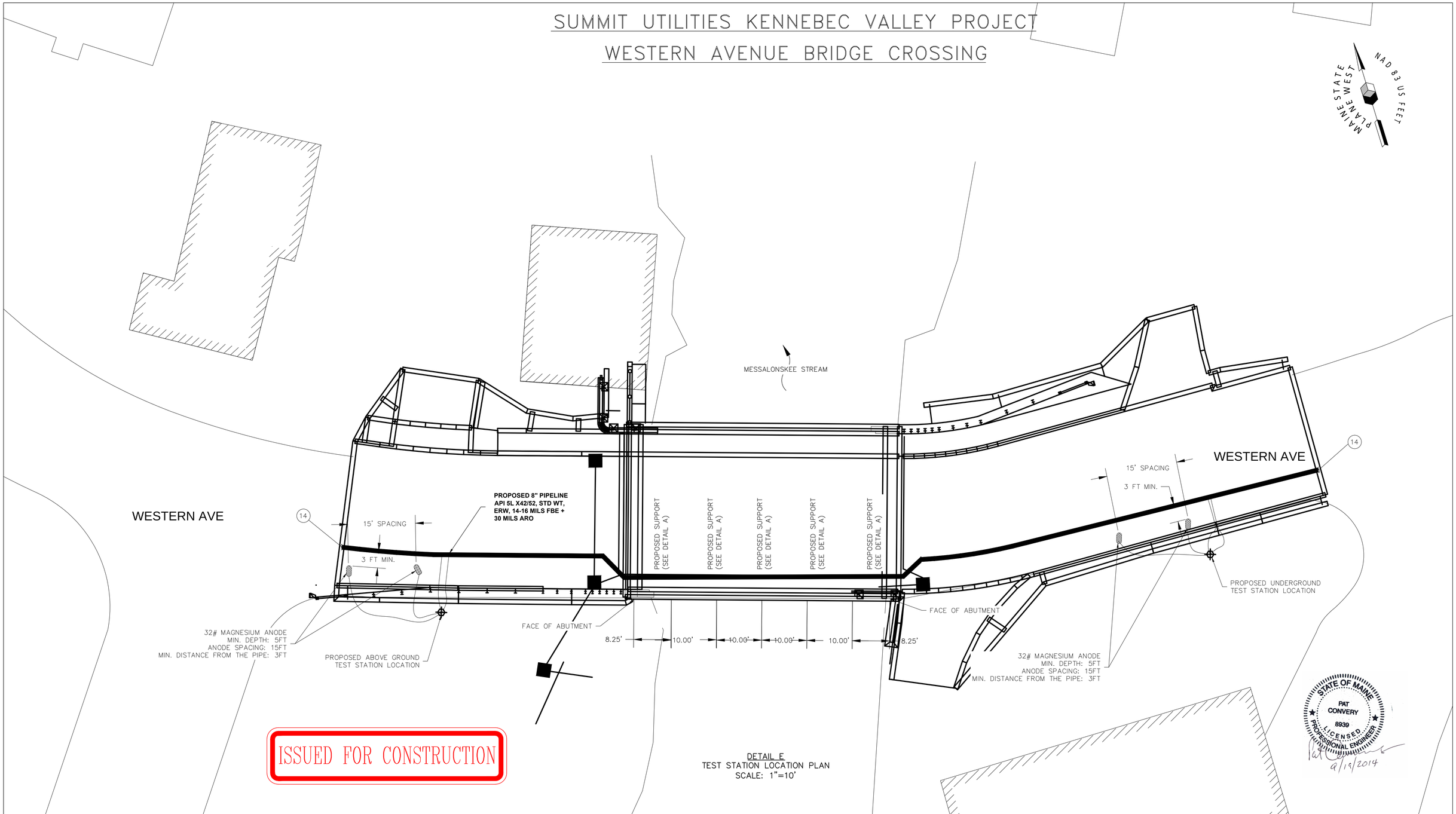

ISSUED FOR CONSTRUCTION

DETAIL E
TEST STATION LOCATION PLAN
SCALE: 1"=10'

REV. NO.	DATE	DESCRIPTION	DRWN BY	CHK'D BY	APP'D BY
0	09/19/2014	ISSUED FOR CONSTRUCTION	MSD	PMC	

REVISIONS

Cornerstone Energy Services

DRAWN BY: MSD	DATE: 05/08/14	DRAWING SCALE: SHOWN	G4
CHECKED BY: PMC	DATE: 05/08/14		
APPROVED BY:	DATE:		
FILE NAME: WESTERN_AVENUE_BRIDGE.DWG			

SUMMIT NATURAL OF MAINE
WESTERN AVENUE BRIDGE #3836
WATERVILLE, ME

BRIDGE CROSSING DESIGN
TEST STATION LOCATION PLAN

DWG. REV. 0

SUMMIT UTILITIES KENNEBEC VALLEY PROJECT
WESTERN AVENUE BRIDGE CROSSING

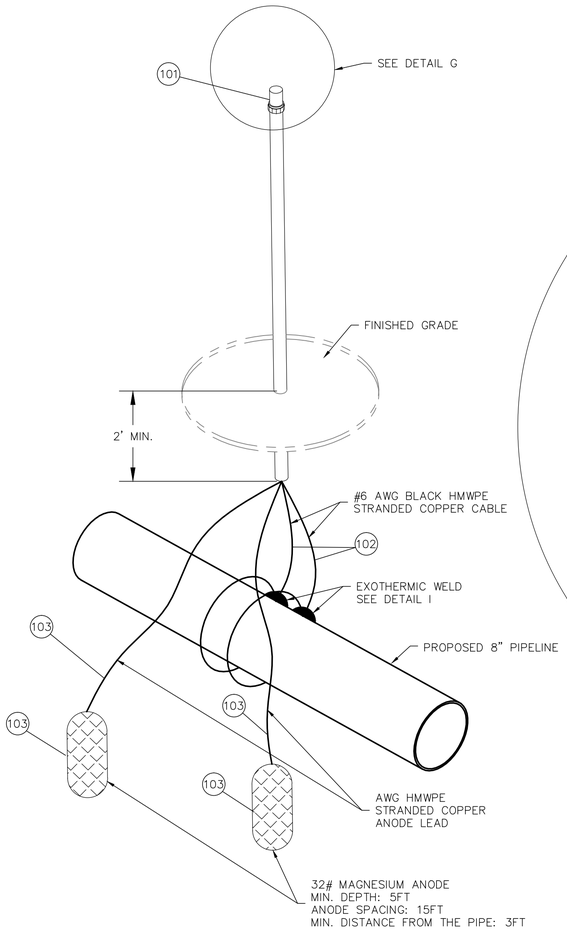

DETAIL F
ABOVE GROUND ANODE TEST STATION DETAIL
SCALE: NTS

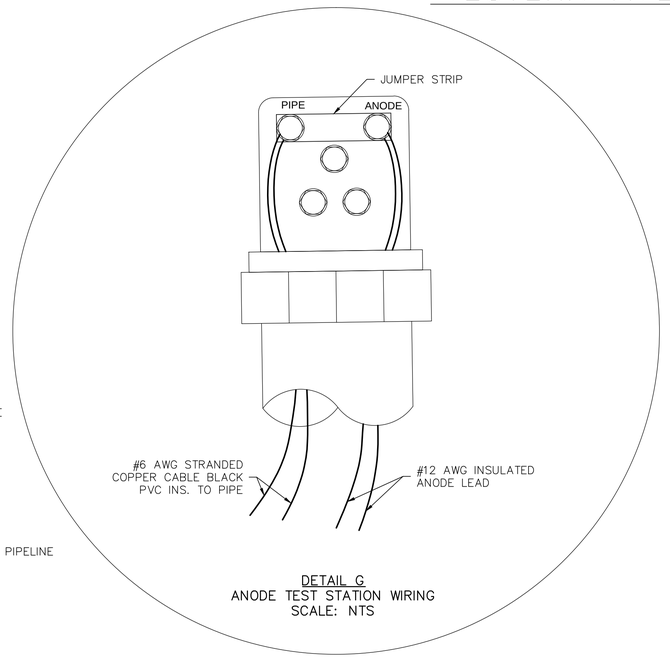

DETAIL G
ANODE TEST STATION WIRING
SCALE: NTS

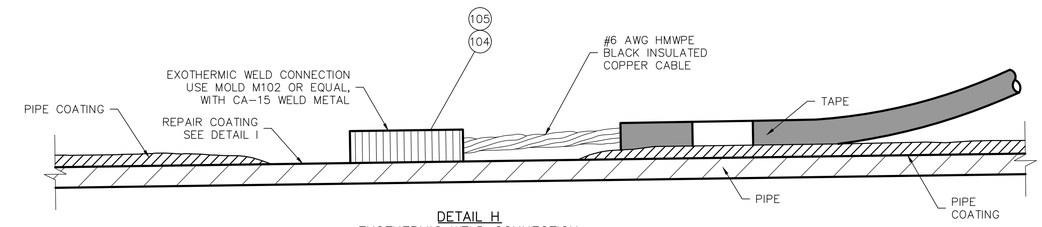

DETAIL H
EXOTHERMIC WELD CONNECTION
SCALE: NTS

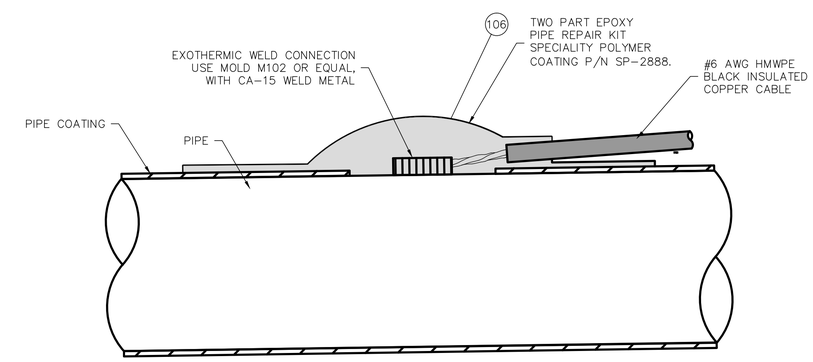

DETAIL I
CORROSION PROTECTION SEAL
SCALE: NTS

STATE OF MAINE
PAT CONVERY
8939
LICENSED
PROFESSIONAL ENGINEER
9/19/2014

ISSUED FOR CONSTRUCTION

REV. NO.	DATE	DESCRIPTION	DRWN BY	CHK'D BY	APP'D BY
0	09/19/2014	ISSUED FOR CONSTRUCTION	MSD	PMC	

REVISIONS

Cornerstone Energy Services

DRAWN BY: MSD	DATE: 05/08/14	DRAWING SCALE: NONE	
CHECKED BY: PMC	DATE: 05/08/14		
APPROVED BY:	DATE:		
FILE NAME: WESTERN_AVENUE_BRIDGE.DWG			

SUMMIT NATURAL OF MAINE
WESTERN AVENUE BRIDGE #3836
WATERVEILLE, ME

BRIDGE CROSSING DESIGN
CATHODIC PROTECTION DETAILS

G5

DWG. REV. 0

SUMMIT UTILITIES KENNEBEC VALLEY PROJECT

WESTERN AVENUE BRIDGE CROSSING

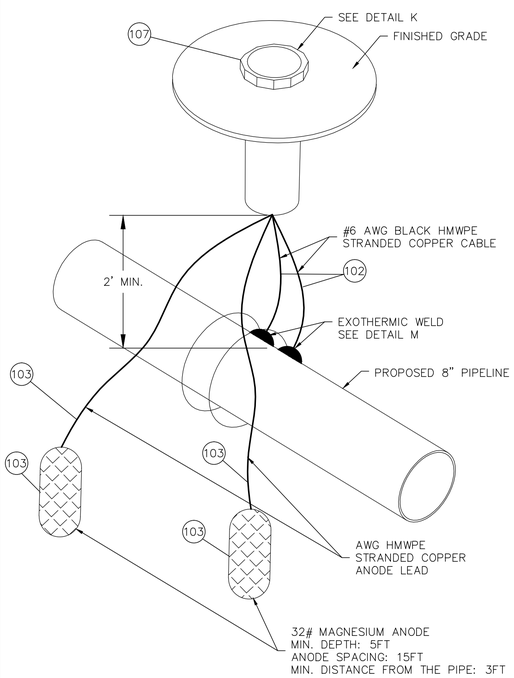

DETAIL J
BELOW GROUND ANODE TEST STATION DETAIL
SCALE: NTS

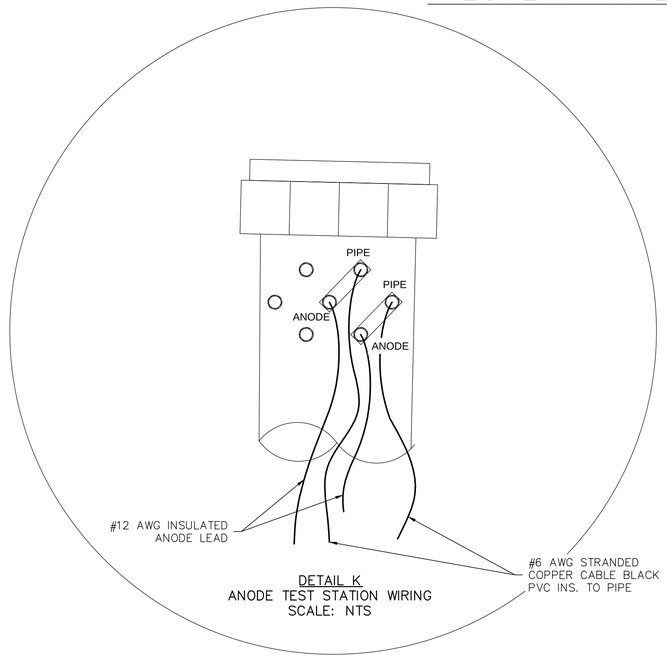

DETAIL K
ANODE TEST STATION WIRING
SCALE: NTS

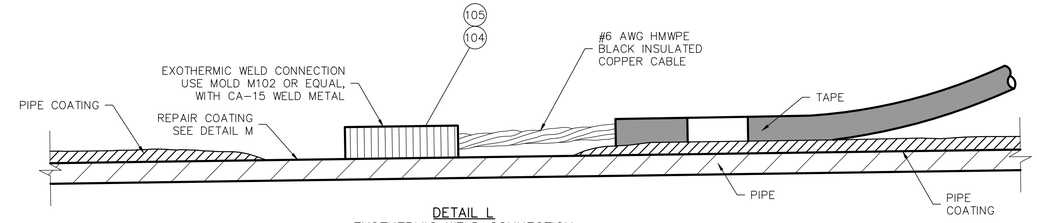

DETAIL L
EXOTHERMIC WELD CONNECTION
SCALE: NTS

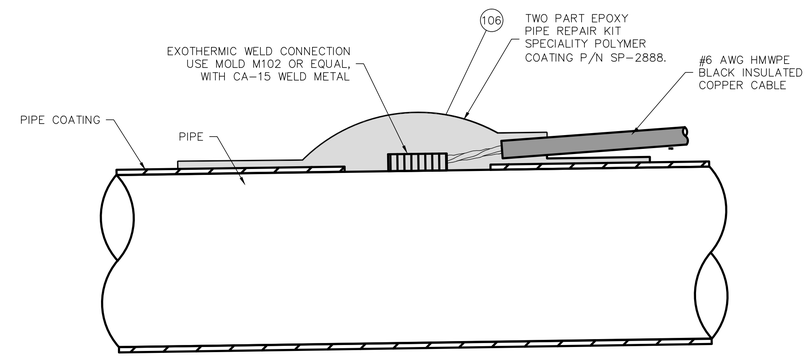

DETAIL M
CORROSION PROTECTION SEAL
SCALE: NTS

STATE OF MAINE
PAT CONVERY
8939
LICENSED PROFESSIONAL ENGINEER
9/19/2014

ISSUED FOR CONSTRUCTION

REV. NO.	DATE	DESCRIPTION	DRWN BY	CHK'D BY	APP'D BY
0	09/19/2014	ISSUED FOR CONSTRUCTION	MSD	PMC	

REVISIONS

Cornerstone Energy Services

DRAWN BY: MSD	DATE: 05/08/14	DRAWING SCALE: NONE	
CHECKED BY: PMC	DATE: 05/08/14		
APPROVED BY:	DATE:		
FILE NAME: WESTERN_AVENUE_BRIDGE.DWG			

SUMMIT NATURAL OF MAINE
WESTERN AVENUE BRIDGE #3836
WATERVILLE, ME

BRIDGE CROSSING DESIGN
CATHODIC PROTECTION DETAILS

G6

DWG. REV. 0

SUMMIT UTILITIES KENNEBEC VALLEY PROJECT
WESTERN AVENUE BRIDGE CROSSING

MECHANICAL BILL OF MATERIAL

MARK	QTY	DESCRIPTION	LENGTH
1	10	⅞" LB&A COIL DESIGN HEAVY DUTY CONCRETE INSERT*	
2	10	⅞" ASTM A307 GALVANIZED FLAT WASHER	
3	10	⅞"ø ASTM A307 GALVANIZED HEAVY HEX NYLON INSERT LOCK NUT	
4	30	⅞"ø ASTM A307 GALVANIZED HEAVY HEX NUTS	
5	20	LB&A ⅞" ROLLER SOCKET	
6	10	LB&A ⅞" ROLL AXLE	
7	10	⅞"ø ALL THREAD GALVANIZED CONTINUOUS THREADED RODS	
8	10	8H NON CONDUCTIVE ROLLER 304SS SLEEVE	
9	10	AMICO 304 11" MAX OD ADJUSTABLE STAINLESS STEEL HOSE CLAMP OR EQUAL	
10	10	GLAS MESH CO. OVERSIZED FRP TYPE #180 SADDLE NO. 8	
11	4	6"x 25' ROLL ENVIROTAPE	
12	2	12" STEEL SLEEVE, STD. WT. 2-PART EPOXY I.D. & O.D. TNEMEC OR EQUAL	2' ±
13	4	LINK-SEAL MODEL #LS-475-12 OR EQUIVALENT	
14	2	8" CENTRAL PLASTICS COMPANY WELD END TRANSITION FITTING #650-0629	

CATHODIC PROTECTION BILL OF MATERIAL

MARK	QTY	DESCRIPTION	LENGTH
101	1	DEAD FRONT BIG FINK ZAPGUARD®TEST STATION, 3" ø CONDUIT X 6' LONG WITH ANCHOR	
102	1	COPPER CABLE, #6 AWG HMWPE INSULATED, STRANDED COPPER CABLE, SOFT-DRAWN, COMMERCIALLY PURE COPPER, ASTM B8, CLASS B STD. USED FOR CONNECTIONS OF ANODE LEAD WIRE TO TEST STATION	150' ±
103	4	32 POUND HIGH-POTENTIAL TYPE MAGNESIUM PREPACKAGED ANODE M1C ALLOY, 50' #12 AWG INSULATED LEAD WIRE TO BE INCLUDED WITH EACH ANODE	
104	2	EXOTHERMIC WELD MOLD. THERMOWELD P/N M102 HANDLE CLAMP AND FLINT IGNIGHTOR ARE INCLUDED. USED FOR EXOTHERMIC WELD CONNECTIONS OF #6 AWG STRANDED CABLE TO PIPE.	
105	1 BOX	EXOTHERMIC WELD METAL, P/N 15CP (THERMOWELD OR EQUAL) BONDS #6 AWG STRANDED CABLE TO PIPELINE CONNECTIONS. 20 SHOTS PER BOX	
106	2	TWO PART EPOXY, SPECIALITY POLYMER COATINGS P/N SP-2888. TWO PART EPOXY FOR REPAIRING PIPE COATING AT #6 AWG CONNECTIONS TO PIPE. APPLY 20ml THICK MIN. 50ml TUBE REPAIRS TWO #6 EXOTHERMIC WELDS TO PIPELINE	
107	1	UNDERGROUND CORROSION PROTECTION TEST STATION BY C.P. TEST SERVICES, INC. MODEL NUMBER T45N2	

NOTES:

1: THIS PROJECT IS SUBJECT TO THE REQUIREMENTS OF BUY AMERICA IN ACCORDANCE WITH FEDERAL REGULATION 23 CFR 635.410 SECTION 1518.

SPECIFIC REQUIREMENTS ARE PRESENTED IN MAINEDOT STANDARD SPECIFICATION SECTION 100, APPENDIX A, SECTION3.A., BUY AMERICA

2: * PRE-CAST IN PLACE

STATE OF MAINE
PAT CONVERY
8939
LICENSED PROFESSIONAL ENGINEER
9/19/2014

ISSUED FOR CONSTRUCTION

REV. NO.	DATE	DESCRIPTION	DRWN BY	CHK'D BY	APP'D BY
0	09/19/2014	ISSUED FOR CONSTRUCTION	MSD	PMC	

REVISIONS

Cornerstone Energy Services

DRAWN BY: MSD DATE: 05/08/14
CHECKED BY: PMC DATE: 05/08/14
APPROVED BY: DATE:
FILE NAME: WESTERN_AVENUE_BRIDGE.DWG

DRAWING SCALE: NONE

SUMMIT NATURAL OF MAINE
WESTERN AVENUE BRIDGE #3836
CITY, STATE

BRIDGE CROSSING DESIGN
BILL OF MATERIALS

G7

DWG. REV. 0