Updated 04/08/14

FEDERAL PROJECT

BIDDING INSTRUCTIONS

FOR ALL PROJECTS:

1. Use pen and ink to complete all paper Bids.
2. As a minimum, the following must be received prior to the time of Bid opening:

For a Paper Bid:

a) a copy of the Notice to Contractors, b) the completed Acknowledgement of Bid Amendments form, c) the completed Schedule of Items, d) two copies of the completed and signed Contract Offer, Agreement & Award form, e) a Bid Guaranty, (if required), and f) any other certifications or Bid requirements listed in the Bid Documents as due by Bid opening.

For an Electronic Bid:

a) a completed Bid using Expedite® software and submitted via the Bid Express™ web-based service, b) an electronic Bid Guaranty (if required) or a faxed copy of a Bid Bond (with original to be delivered within 72 hours), and c) any other Certifications or Bid requirements listed in the Bid Documents as due by Bid opening.

3. Include prices for all items in the Schedule of Items (<u>excluding non-selected alternates</u>).
4. Bid Guaranty acceptable forms are:
   a) a properly completed and signed Bid Bond on the Department's prescribed form (or on a form that does not contain any significant variations from the Department's form as determined by the Department) for 5% of the Bid Amount or
   b) an Official Bank Check, Cashier's Check, Certified Check, U.S. Postal Money Order or Negotiable Certificate of Deposit in the amount stated in the Notice to Contractors or
   c) an electronic bid bond submitted with an electronic bid.

5. If a paper Bid is to be sent, "FedEx First Overnight" delivery is suggested as the package is delivered directly to the DOT Headquarters Building located at 16 Child Street in Augusta. Other means, such as U.S. Postal Service's Express Mail has proven not to be reliable.

IN ADDITION, FOR FEDERAL AID PROJECTS:

6. Complete the DBE Proposed Utilization form, and submit with your bid. If you are submitting your bid electronically, you must FAX the form to (207) 624-3431. This is a curable defect.

If you need further information regarding Bid preparation, call the DOT Contracts Section at (207) 624-3410.

For complete bidding requirements, refer to Section 102 of the Maine Department of Transportation, Standard Specifications, Revision of December 2002.

January 19, 2012
Supersedes September 09, 2011

NOTICE

The Maine Department of Transportation is attempting to improve the way Bid Amendments/Addendums are handled, and allow for an electronic downloading of bid packages from our website, while continuing to maintain an optional planholders list.

Prospective bidders, subcontractors or suppliers who wish to download a copy of the bid package and receive a courtesy notification of project specific bid amendments, must provide an email address to Diane Barnes or David Venner at the MDOT Contracts mailbox at: MDOT.contracts@maine.gov. Each bid package will require a separate request.

Additionally, interested parties will be responsible for reviewing and retrieving the Bid Amendments from our web site, and acknowledging receipt and incorporating those Bid Amendments in their bids using the Acknowledgement of Bid Amendment Form.

The downloading of bid packages from the MDOT website is not the same as providing an electronic bid to the Department. Electronic bids must be submitted via http://www.BIDX.com. For information on electronic bidding contact Patrick Corum at patrick.corum@maine.gov , Rebecca Snowden at rebecca.snowden@maine.gov or Diane Barnes at diane.barnes@maine.gov.

NOTICE

For security and other reasons, all Bid Packages which are mailed, shall be provided in double (one envelope inside the other) envelopes. The *Inner Envelope* shall have the following information provided on it:

Bid Enclosed - Do Not Open
PIN:
Town:
Date of Bid Opening:
Name of Contractor with mailing address and telephone number:

In Addition to the usual address information, the *Outer Envelope* should have written or typed on it:

Double Envelope: Bid Enclosed
PIN:
Town:
Date of Bid Opening:
Name of Contractor:
This should not be much of a change for those of you who use Federal Express or similar services.

Hand-carried Bids may be in one envelope as before, and should be marked with the following infrormation:

Bid Enclosed: Do Not Open
PIN:
Town:
Name of Contractor:

October 16, 2001

STATE OF MAINE DEPARTMENT OF TRANSPORTATION

Bid Guaranty-Bid Bond Form

KNOW ALL MEN BY THESE PRESENTS THAT_____

_____, of the City/Town of _____and State of_____

as Principal, and _____as Surety, a

Corporation duly organized under the laws of the State of_____and having a usual place of

Business in _____and hereby held and firmly bound unto the Treasurer of

the State of Maine in the sum of_____,for payment which Principal and Surety bind

themselves, their heirs, executers, administrators, successors and assigns, jointly and severally.

The condition of this obligation is that the Principal has submitted to the Maine Department of Transportation, hereafter Department, a certain bid, attached hereto and incorporated as a part herein, to enter into a written contract for the construction of _____

_____

_____and if the Department shall accept said bid and the Principal shall execute and deliver a contract in the form attached hereto (properly completed in accordance with said bid) and shall furnish bonds for this faithful performance of said contract, and for the payment of all persons performing labor or furnishing material in connection therewith, and shall in all other respects perform the agreement created by the acceptance of said bid, then this obligation shall be null and void; otherwise it shall remain in full force, and effect.

Signed and sealed this_____day of _____20_____

WITNESS:

_____

_____

_____

WITNESS

_____

_____

_____

PRINCIPAL:

By_____

By:_____

By:_____

SURETY:

By_____

By:_____

Name of Local Agency: _____

SAMPLE

NOTICE

Bidders:

Please use the attached "Request for Information" form when faxing questions and comments concerning specific Contracts that have been Advertised for Bid. Include additional numbered pages as required. Questions are to be faxed to the number listed in the Notice to Contractors. This is the only allowable mechanism for answering Project specific questions. Maine DOT will not be bound to any answers to Project specific questions received during the Bidding phase through other processes.

State of Maine
Department of Transportation

REQUEST FOR INFORMATION

Date _____ Time _____

Information Requested: **PIN:** _____ **Town(s):** _____

_____

_____

_____

_____

_____

_____

_____

_____

_____

_____

_____

_____

Request by: _____ **Phone: (_____)**_____
Bid Date: _____ **Fax: (_____)**_____

Complete top portion of form and transmit to the number listed in the Notice to Contractors

RFI No: _____ **RFI received:** _____

Response:_____

_____

_____

_____

_____

_____

_____

_____

_____

_____

_____

Response By:_____ Date: _____

NOTICE

Disadvantaged Business Enterprise Proposed Utilization

The Apparent Low Bidder shall submit the Disadvantaged Business Enterprise Proposed Utilization form with their bid. This is a curable bid defect.

The Contractor's Disadvantaged Business Enterprise Proposed Utilization Plan form contains additional information that is required by USDOT.

The Contractor's Disadvantaged Business Enterprise Proposed Utilization Plan form should be used.

A copy of the new Contractor's Disadvantaged Business Enterprise Proposed Utilization Plan and instructions for completing it are attached.

Note: Questions about DBE firms, or to obtain a printed copy of the DBE Directory, contact The Office of Civil Rights at (207) 624-3066.

MDOTs DBE Directory of Certified firms can also be obtained at http://www.maine.gov/mdot/civilrights/dbe.htm

INSTRUCTIONS FOR PREPARING THE MaineDOT CONTRACTOR'S DBE/SUBCONTRACTOR UTILIZATION FORM

The Contractor Shall Extend equal opportunity to MaineDOT certified DBE firms (as listed in MaineDOT's DBE Directory of Certified Businesses) in the selection and utilization of Subcontractors and Suppliers.

SPECIFIC INSTRUCTIONS FOR COMPLETING THE FORM:

Insert Contractor name, the name of the person(s) preparing the form, and that person(s) telephone, fax number and e-mail address.

Calculate and provide percentage of your bid that will be allocated to DBE firms, Federal Project Identification Number, and location of the Project work.

In the columns, name each subcontractor, DBE and non-DBE firm to be used, provide the Unit/Item cost of the work/product to be provided by the subcontractor, give a brief description and the dollar value of the work.

Revised 1/12

DBE GOAL NOTICE FFY 2013-15
Maine Department of Transportation
Disadvantaged Business Enterprise Program

Notice is hereby given that in accordance with US DOT regulation 49 CFR Part 26, the Maine Department of Transportation has established a DBE Program for disadvantaged business participation in the federal-aid highway and bridge construction program; MaineDOT contracts covered by the program include consulting, construction, supplies, manufacturing, and service contracts.

For FFY 2013-15 (October 1, 2012 through September 30, 2015) MaineDOT has established an annual DBE participation goal of **4.0%** to be achieved through race/gender neutral means. This goal has been approved by the Federal Highway Administration and remains in effect through September 30, 2015. Maine DOT must meet this goal each federal fiscal year. If the goal is not met, MaineDOT must provide a justification for not meeting the goal and provide a plan to ensure the goal is met, which may include contract goals on certain projects that contractors will be required to meet.

MaineDOT asks all contractors, consultants and subcontractors to seek certified DBE firms for projects and to work to meet the determined 4.0% goal without the need to impose contract goals. DBE firms are listed on the MaineDOT website at:

http://www.maine.gov/mdot/civilrights/dbe.htm

Interested parties may view MaineDOT's DBE goal setting methodology also posted on this website. If you have questions regarding this goal or the DBE program you may contact Sherry Tompkins at the Maine Department of Transportation, Civil Rights Office by telephone at (207) 624-3066 or by e-mail at: sherry.tompkins@maine.gov

.

MaineDOT CONTRACTOR'S DBE/SUBCONTRACTOR PROPOSED UTILIZATION FORM

All Bidders must furnish this form with their bid on Bid Opening day

Contractor: _____ **Telephone:** _____ **Ext** _____

Contact Person: _____ **Fax:** _____

E-mail: _____

BID DATE: _____

FEDERAL PROJECT PIN # _____ **PROJECT LOCATION:** _____

TOTAL ANTICIPATED DBE ____ % PARTICIPATION FOR THIS CONTRACT

WBE	DBE	Non DBE	Firm Name	Item Number & Description of Work	Quantity	Cost Per Unit/Item	Anticipated $ Value
						Subcontractor Total>	
						DBE Total >	

NOTE: THIS INFORMATION IS USED TO TRACK AND REPORT ANTICIPATED DBE PARTICIPATION IN ALL FEDERALLY FUNDED MAINE DOT CONTRACTS. THE ANTICIPATED DBE AMOUNT IS VOLUNTARY AND WILL NOT BECOME A PART OF THE CONTRACTUAL TERMS.

Equal Opportunity Use:

Form received: ___/___/___ Verified by: _____

FHWA ☐ FTA ☐ FAA ☐

For a complete list of certified firms and company designation (WBE/DBE) go to http://www.maine.gov/mdot

Rev. 05/13

Maine Department of Transportation Civil Rights Office

Directory of Certified Disadvantaged Business Enterprises

Listing can be found at:

http://www.maine.gov/mdot/civilrights/dbe.htm

For additional information and guidance contact:

Civil Rights Office at (207) 624-3066

It is the responsibility of the Contractor to access the DBE Directory at this site in order to have the most current listing.

Vendor Registration

Prospective Bidders must register as a vendor with the Department of Administrative & Financial Services if the vendor is awarded a contract. Vendors will not be able to receive payment without first being registered. Vendors/Contractors will find information and register through the following link –
http://www.maine.gov/purchases/venbid/index.shtml

STATE OF MAINE DEPARTMENT OF TRANSPORTATION
NOTICE TO CONTRACTORS

Sealed Bids addressed to the Maine Department of Transportation, Augusta, Maine 04333 and endorsed on the wrapper "Bids for Bridge Street bridge replacement in the city of **WESTBROOK**" will be received from contractors at the Reception Desk, Maine DOT Building, Capitol Street, Augusta, Maine, until 11:00 o'clock A.M. (prevailing time) on December 3, 2014 and at that time and place publicly opened and read. Bids will be accepted from all bidders. The lowest responsive bidder must have completed, or successfully complete, a bridge, highway, or project specific prequalification to be considered for the award of this contract. **We now accept electronic bids for those bid packages posted on the bidx.com website. Electronic bids do not have to be accompanied by paper bids. Please note: the Department will accept a facsimile of the bid bond; however, the original bid bond must then be received at the MDOT Contract Section within 72 hours of the bid opening. Until further notice, dual bids (one paper, one electronic) will be accepted, with the paper copy taking precedence**.

Description: Maine Federal Aid Project No. STP-1928(200), WIN 019282.00

Location: In Cumberland County, project is located on Bridge Street over the Presumpscot River approximately 0.1 mile northerly of route 25 junction.

Scope of Work: Bridge Street bridge replacement plus other incidental work.

The basis of award will be Section 1 only.

For general information regarding Bidding and Contracting procedures, contact George Macdougall at (207) 624-3410. Our webpage at http://www.maine.gov/mdot/contractors/ contains a copy of the schedule of items, Plan Holders List, written portions of bid amendments, drawings, and bid results. For Project-specific information fax all questions to **Project Manager Nate Benoit** at (207)624-3431. Questions received after 12:00 noon of Monday prior to bid date will not be answered. Bidders shall not contact any other Departmental staff for clarification of Contract provisions, and the Department will not be responsible for any interpretations so obtained. TTY users call Maine Relay 711.

Plans, specifications and bid forms may be seen at the Maine DOT Building in Augusta, Maine and at the Department of Transportation's Regional Office in Scarborough. They may be purchased from the Department between the hours of 8:00 a.m. to 4:30 p.m. by cash, credit card (Visa/Mastercard) or check payable to Treasurer, State of Maine sent to Maine Department of Transportation, Attn.: Mailroom, 16 State House Station, Augusta, Maine 04333-0016. They also may be purchased by telephone at (207) 624-3536 between the hours of 8:00 a.m. to 4:30 p.m. Full size plans $115.00 ($122.00 by mail). Half size plans $57.50 ($61.25 by mail), Bid Book $10 ($13 by mail), Single Sheets $2, payment in advance, all non-refundable.

Each Bid must be made upon blank forms provided by the Department and must be accompanied by a bid bond at 5% of the bid amount or an official bank check, cashier's check, certified check, certificate of deposit, or United States postal money order in the amount of $170,000.00 payable to Treasurer, State of Maine as a Bid guarantee. A Contract Performance Surety Bond and a Contract Payment Surety Bond, each in the amount of 100 percent of the Contract price, will be required of the successful Bidder.

This Contract is subject to all applicable Federal Laws. This contract is subject to compliance with the Disadvantaged Business Enterprise program requirements as set forth by the Maine Department of Transportation.

All work shall be governed by "State of Maine, Department of Transportation, Standard Specifications, Revision of December 2002", price $10 [$13 by mail], and Standard Details, Revision of December 2002, price $20 [$25 by mail]. They also may be purchased by telephone at (207) 624-3536 between the hours of 8:00 a.m. to 4:30 p.m. Standard Detail updates can be found at http://www.maine.gov/mdot/contractors/publications/ .

The right is hereby reserved to the Maine DOT to reject any or all bids.

Augusta, Maine
November 12, 2014

STATE OF MAINE
Joyce Noel Taylor
6997
LICENSED
PROFESSIONAL ENGINEER

JOYCE NOEL TAYLOR P.E.
CHIEF ENGINEER

Westbrook
Bridge Street Bridge
WIN 019282.00
April 14, 2011
Supersedes August 3, 2004

SPECIAL PROVISION 102.7.3
ACKNOWLEDGMENT OF BID AMENDMENTS

With this form, the Bidder acknowledges its responsibility to check for all Amendments to the Bid Package. For each Project under Advertisement, Amendments are located at http://www.maine.gov/mdot/contractors/ . It is the responsibility of the Bidder to determine if there are Amendments to the Project, to download them, to incorporate them into their Bid Package, and to reference the Amendment number and the date on the form below. The Maine DOT will not post Bid Amendments any later than noon the day before Bid opening without individually notifying all the planholders.

Amendment Number	Date

The Contractor, for itself, its successors and assigns, hereby acknowledges that it has received all of the above referenced Amendments to the Bid Package.

CONTRACTOR

_____ _____
Date Signature of authorized representative

_____
(Name and Title Printed)

Maine Department of Transportation

Proposal Schedule of Items

Proposal ID: 019282.00 **Project(s):** 019282.00

SECTION: 1 MAIN ITEMS

Alt Set ID: **Alt Mbr ID:**

Contractor: _____

Proposal Line Number	Item ID Description	Approximate Quantity and Units	Unit Price Dollars	Unit Price Cents	Bid Amount Dollars	Bid Amount Cents
0010	201.23 REMOVING SINGLE TREE TOP ONLY	17.000 EA				
0020	201.24 REMOVING STUMP	17.000 EA				
0030	201.30 TREE GRATE	32.000 EA				
0040	201.31 TREE GUARD	32.000 EA				
0050	202.10 REMOVING EXISTING SUPERSTRUCTURE (PROPERTY OF CONTRACTOR)	LUMP SUM	LUMP SUM			
0060	202.111 REMOVING OF CONCRETE SIDEWALK	1,060.000 SY				
0070	202.12 REMOVING EXISTING STRUCTURAL CONCRETE	45.000 CY				
0080	202.14 REMOVING EXISTING RAILINGS (PROPERTY OF CONTRACTOR)	184.000 LF				
0090	202.15 REMOVING MANHOLE OR CATCH BASIN	7.000 EA				
0100	202.20 REMOVING BITUMINOUS CONCRETE PAVEMENT	1,100.000 SY				
0110	202.2005 REMOVE AND RELOCATE BIKE RACK AND TRASH RECEPTACLE	LUMP SUM	LUMP SUM			

Maine Department of Transportation

Proposal Schedule of Items

Proposal ID: 019282.00 **Project(s):** 019282.00

SECTION: 1 MAIN ITEMS

Alt Set ID: **Alt Mbr ID:**

Contractor: _____

Proposal Line Number	Item ID Description	Approximate Quantity and Units	Unit Price Dollars	Unit Price Cents	Bid Amount Dollars	Bid Amount Cents
0120	202.202 REMOVING PAVEMENT SURFACE	500.000 SY				
0130	203.20 COMMON EXCAVATION	2,918.000 CY				
0140	203.2312 HEALTH AND SAFETY PLAN	LUMP SUM	LUMP SUM			
0150	203.2333 DISPOSAL OF SPECIAL EXCAVATION	470.000 T				
0160	203.25 GRANULAR BORROW	1,540.000 CY				
0170	206.061 STRUCTURAL EARTH EXCAVATION - DRAINAGE AND MINOR STRUCTURES, BELOW GRADE	35.000 CY				
0180	206.082 STRUCTURAL EARTH EXCAVATION - MAJOR STRUCTURES	590.000 CY				
0190	206.092 STRUCTURAL ROCK EXCAVATION - MAJOR STRUCTURES	153.000 CY				
0200	206.10 STRUCTURAL EARTH EXCAVATION - PIERS	55.000 CY				
0210	206.11 STRUCTURAL ROCK EXCAVATION - PIERS	74.000 CY				
0220	304.09 AGGREGATE BASE COURSE - CRUSHED	155.000 CY				

Maine Department of Transportation

Proposal Schedule of Items

Proposal ID: 019282.00 **Project(s):** 019282.00

SECTION: 1 MAIN ITEMS

Alt Set ID: **Alt Mbr ID:**

Contractor: _____

Proposal Line Number	Item ID Description	Approximate Quantity and Units	Unit Price Dollars	Unit Price Cents	Bid Amount Dollars	Bid Amount Cents
0230	304.10 AGGREGATE SUBBASE COURSE - GRAVEL	2,183.000 CY				
0240	403.207 HOT MIX ASPHALT 19.0 MM HMA	390.000 T				
0250	403.208 HOT MIX ASPHALT 12.5 MM HMA SURFACE	55.000 T				
0260	403.2081 12.5 MM POLYMER MODIFIED HOT MIX ASPHALT	190.000 T				
0270	403.209 HOT MIX ASPHALT 9.5 MM (SIDEWALKS, DRIVES, INCIDENTALS)	73.000 T				
0280	403.210 HOT MIX ASPHALT 9.5 MM	166.000 T				
0290	403.213 HOT MIX ASPHALT 12.5 MM BASE	214.000 T				
0300	403.2131 12.5 MM POLYMER MODIFIED HMA BASE	190.000 T				
0310	409.15 BITUMINOUS TACK COAT - APPLIED	197.000 G				
0320	421.30 BRICK PAVERS	590.000 SY				
0330	424.3331 ASPHALT LOW MODULUS CRACK SEALER, APPLIED	100.000 LB				

Maine Department of Transportation

Proposal Schedule of Items

Proposal ID: 019282.00 **Project(s):** 019282.00

SECTION: 1 MAIN ITEMS

Alt Set ID: **Alt Mbr ID:**

Contractor: _____

Proposal Line Number	Item ID Description	Approximate Quantity and Units	Unit Price Dollars . Cents	Bid Amount Dollars . Cents
0340	502.21 STRUCTURAL CONCRETE, ABUTMENTS AND RETAINING WALLS	78.000 CY	_____.____	_____.____
0350	502.219 STRUCTURAL CONCRETE, ABUTMENTS AND RETAINING WALLS	LUMP SUM	LUMP SUM	_____.____
0360	502.22 STRUCTURAL CONCRETE, ABUTMENTS AND RETAINING WALLS (PLACED U NDER WATER)	220.000 CY	_____.____	_____.____
0370	502.239 STRUCTURAL CONCRETE PIERS	LUMP SUM	LUMP SUM	_____.____
0380	502.24 STRUCTURAL CONCRETE PIERS (PLACED UNDER WATER)	190.000 CY	_____.____	_____.____
0390	502.25 STRUCTURAL CONCRETE SUPERSTRUCTURE SLABS	LUMP SUM	LUMP SUM	_____.____
0400	502.31 STRUCTURAL CONCRETE APPROACH SLABS	LUMP SUM	LUMP SUM	_____.____
0410	502.341 STRUCTURAL CONCRETE ROADWAY MEDIAN	18.000 CY	_____.____	_____.____
0420	502.49 STRUCTURAL CONCRETE CURBS AND SIDEWALKS	LUMP SUM	LUMP SUM	_____.____
0430	502.56 CONCRETE FILL	30.000 CY	_____.____	_____.____
0440	502.72 FIBER REINFORCED POLYMER BRIDGE DRAIN - TYPE A	8.000 EA	_____.____	_____.____

Maine Department of Transportation

Proposal Schedule of Items

Proposal ID: 019282.00 **Project(s):** 019282.00

SECTION: 1 MAIN ITEMS

Alt Set ID: **Alt Mbr ID:**

Contractor: _____

Proposal Line Number	Item ID Description	Approximate Quantity and Units	Unit Price Dollars	Unit Price Cents	Bid Amount Dollars	Bid Amount Cents
0450	503.12 REINFORCING STEEL, FABRICATED AND DELIVERED	69,000.000 LB	_____	_____	_____	_____
0460	503.13 REINFORCING STEEL, PLACING	69,000.000 LB	_____	_____	_____	_____
0470	507.0821 STEEL BRIDGE RAILING, 3 BAR	LUMP SUM	LUMP SUM		_____	_____
0480	507.0842 ORNAMENTAL PEDESTRIAN RAILING	LUMP SUM	LUMP SUM		_____	_____
0490	508.14 HIGH PERFORMANCE WATERPROOFING MEMBRANE	LUMP SUM	LUMP SUM		_____	_____
0500	509.70 COMPOSITE BEAM	LUMP SUM	LUMP SUM		_____	_____
0510	511.07 COFFERDAM: ABUT 1	LUMP SUM	LUMP SUM		_____	_____
0520	511.07 COFFERDAM: PIER	LUMP SUM	LUMP SUM		_____	_____
0530	511.07 COFFERDAM: ABUT 2	LUMP SUM	LUMP SUM		_____	_____
0540	512.081 FRENCH DRAINS	LUMP SUM	LUMP SUM		_____	_____
0550	514.06 CURING BOX FOR CONCRETE CYLINDERS	1.000 EA	_____	_____	_____	_____
0560	515.20 PROTECTIVE COATING FOR CONCRETE SURFACES	92.000 SY	_____	_____	_____	_____

Maine Department of Transportation

Proposal Schedule of Items

Proposal ID: 019282.00 **Project(s):** 019282.00

SECTION: 1 MAIN ITEMS

Alt Set ID: **Alt Mbr ID:**

Contractor: _____

Proposal Line Number	Item ID Description	Approximate Quantity and Units	Unit Price Dollars	Unit Price Cents	Bid Amount Dollars	Bid Amount Cents
0570	518.51 REPAIR OF UPWARD FACING SURFACES - BELOW REINFORCING STEEL < 7.9 IN.	110.000 SF	_____	_____	_____	_____
0580	518.60 REPAIR OF VERTICAL SURFACES < 7.9 IN.	60.000 SF	_____	_____	_____	_____
0590	518.61 REPAIR OF VERTICAL SURFACES > 7.9 IN.	2.000 CY	_____	_____	_____	_____
0600	518.80 CRACK REPAIR	50.000 LF	_____	_____	_____	_____
0610	520.232 EXPANSION DEVICE - ASPHALTIC PLUG JOINT	64.000 LF	_____	_____	_____	_____
0620	523.52 BEARING INSTALLATION	28.000 EA	_____	_____	_____	_____
0630	523.5402 LAMINATED ELASTOMERIC BEARINGS, EXPANSION	28.000 EA	_____	_____	_____	_____
0640	525.26 REPOINTING GRANITE MASONRY	600.000 SF	_____	_____	_____	_____
0650	526.301 TEMPORARY CONCRETE BARRIER TYPE I	LUMP SUM	LUMP SUM		_____	_____
0660	526.34 PERMANENT CONCRETE TRANSITION BARRIER	4.000 EA	_____	_____	_____	_____
0670	527.3031 ENERGY ABSORBING SYSTEM (ET-PLUS)	1.000 EA	_____	_____	_____	_____

Maine Department of Transportation

Proposal Schedule of Items

Proposal ID: 019282.00 **Project(s):** 019282.00

SECTION: 1 MAIN ITEMS

Alt Set ID: **Alt Mbr ID:**

Contractor: _____

Proposal Line Number	Item ID Description	Approximate Quantity and Units	Unit Price Dollars	Unit Price Cents	Bid Amount Dollars	Bid Amount Cents
0680	527.34 WORK ZONE CRASH CUSHIONS	4.000 UN	_____	_____	_____	_____
0690	530.01 STEEL PEDESTRIAN BRIDGE	LUMP SUM	LUMP SUM		_____	_____
0700	530.34 FIBERGLASS REINFORCED POLYMER STAY IN PLACE FORM	4,100.000 SF	_____	_____	_____	_____
0710	602.30 FLOWABLE CONCRETE FILL	4.000 CY	_____	_____	_____	_____
0720	603.159 12 INCH CULVERT PIPE OPTION III	74.000 LF	_____	_____	_____	_____
0730	603.179 18 INCH CULVERT PIPE OPTION III	260.000 LF	_____	_____	_____	_____
0740	604.072 CATCH BASIN TYPE A1-C	6.000 EA	_____	_____	_____	_____
0750	604.092 CATCH BASIN TYPE B1-C	1.000 EA	_____	_____	_____	_____
0760	604.16 ALTERING CATCH BASIN TO MANHOLES	2.000 EA	_____	_____	_____	_____
0770	604.166 REBUILDING MANHOLE	1.000 EA	_____	_____	_____	_____
0780	604.18 ADJUSTING MANHOLE OR CATCH BASIN TO GRADE	27.000 EA	_____	_____	_____	_____
0790	604.182 CLEAN EXISTING CATCH BASIN AND MANHOLE	10.000 EA	_____	_____	_____	_____

Maine Department of Transportation

Proposal Schedule of Items

Proposal ID: 019282.00 **Project(s):** 019282.00

SECTION: 1 MAIN ITEMS

Alt Set ID: **Alt Mbr ID:**

Contractor: _____

Proposal Line Number	Item ID Description	Approximate Quantity and Units	Unit Price		Bid Amount	
			Dollars	Cents	Dollars	Cents
0800	604.247 CATCH BASIN TYPE F5-C	2.000 EA	_____	_____	_____	_____
0810	604.249 CATCH BASIN TYPE F6-C	2.000 EA	_____	_____	_____	_____
0820	604.30 SPECIAL CATCH BASIN	11.000 EA	_____	_____	_____	_____
0830	605.07 4" UNDERDRAIN PIPE	220.000 LF	_____	_____	_____	_____
0840	606.1721 BRIDGE TRANSITION - TYPE 1	4.000 EA	_____	_____	_____	_____
0850	606.23 GUARDRAIL TYPE 3C - SINGLE RAIL	137.500 LF	_____	_____	_____	_____
0860	606.231 GUARDRAIL TYPE 3C - 15 FOOT RADIUS AND LESS	37.500 LF	_____	_____	_____	_____
0870	606.259 ANCHORAGE ASSEMBLY	3.000 EA	_____	_____	_____	_____
0880	606.265 TERMINAL END - SINGLE RAIL - GALVANIZED STEEL	3.000 EA	_____	_____	_____	_____
0890	606.353 REFLECTORIZED FLEXIBLE GUARDRAIL MARKER	8.000 EA	_____	_____	_____	_____
0900	606.614 REMOVE AND STACK TIMBER GUARDRAIL	150.000 LF	_____	_____	_____	_____
0910	607.47 BIRD BARRIER	50.000 LF	_____	_____	_____	_____

Maine Department of Transportation

Proposal Schedule of Items

Proposal ID: 019282.00 **Project(s):** 019282.00

SECTION: 1 MAIN ITEMS

Alt Set ID: **Alt Mbr ID:**

Contractor: _____

Proposal Line Number	Item ID Description	Approximate Quantity and Units	Unit Price		Bid Amount	
			Dollars	Cents	Dollars	Cents
0920	608.08 REINFORCED CONCRETE SIDEWALK	175.000 SY	_____	_____	_____	_____
0930	608.08 REINFORCED CONCRETE SIDEWALK 6 INCH CITY PLAZA	864.000 SY	_____	_____	_____	_____
0940	608.08 REINFORCED CONCRETE SIDEWALK 5 INCH CITY SIDEWALK	1,790.000 SY	_____	_____	_____	_____
0950	608.26 CURB RAMP DETECTABLE WARNING FIELD	254.000 SF	_____	_____	_____	_____
0960	609.11 VERTICAL CURB TYPE 1	323.000 LF	_____	_____	_____	_____
0970	609.12 VERTICAL CURB TYPE 1 - CIRCULAR	406.000 LF	_____	_____	_____	_____
0980	609.237 TERMINAL CURB TYPE 1 - 7 FOOT	33.000 EA	_____	_____	_____	_____
0990	609.2371 TERMINAL CURB TYPE 1- 7 FT - CIRCULAR	23.000 EA	_____	_____	_____	_____
1000	609.312 SPECIAL CURB WHEEL STOP	96.000 LF	_____	_____	_____	_____
1010	609.38 RESET CURB TYPE 1	1,775.000 LF	_____	_____	_____	_____
1020	609.441 CURBING REMOVED AND STACKED	1,262.000 LF	_____	_____	_____	_____
1030	610.08 PLAIN RIPRAP	770.000 CY	_____	_____	_____	_____

Maine Department of Transportation

Proposal Schedule of Items

Proposal ID: 019282.00 **Project(s):** 019282.00

SECTION: 1 MAIN ITEMS

Alt Set ID: **Alt Mbr ID:**

Contractor: _____

Proposal Line Number	Item ID Description	Approximate Quantity and Units	Unit Price		Bid Amount	
			Dollars	Cents	Dollars	Cents
1040	610.18 STONE DITCH PROTECTION	65.000 CY	_____	_____	_____	_____
1050	613.319 EROSION CONTROL BLANKET	190.000 SY	_____	_____	_____	_____
1060	615.07 LOAM	373.000 CY	_____	_____	_____	_____
1070	616.08 SODDING	177.000 SY	_____	_____	_____	_____
1080	617.30 COMPOSTED BARK MIX	74.000 CY	_____	_____	_____	_____
1090	618.1301 SEEDING METHOD NUMBER 1 - PLAN QUANTITY	6.000 UN	_____	_____	_____	_____
1100	618.1401 SEEDING METHOD NUMBER 2 - PLAN QUANTITY	4.500 UN	_____	_____	_____	_____
1110	618.1411 SEEDING METHOD NUMBER 3 - PLAN QUANTITY	2.000 UN	_____	_____	_____	_____
1120	618.25 APPLIED WATER	10.000 MGAL	_____	_____	_____	_____
1130	619.12 MULCH	12.500 UN	_____	_____	_____	_____
1140	619.1401 EROSION CONTROL MIX	10.000 CY	_____	_____	_____	_____
1150	620.58 EROSION CONTROL GEOTEXTILE	1,310.000 SY	_____	_____	_____	_____

Maine Department of Transportation

Proposal Schedule of Items

Proposal ID: 019282.00 **Project(s):** 019282.00

SECTION: 1 MAIN ITEMS

Alt Set ID: **Alt Mbr ID:**

Contractor: _____

Proposal Line Number	Item ID Description	Approximate Quantity and Units	Unit Price Dollars	Unit Price Cents	Bid Amount Dollars	Bid Amount Cents
1160	621.132 SMALL DECIDUOUS TREE (1 INCH - 1.50 INCH CALIPER) GROUP A	32.000 EA				
1170	621.273 LARGE DECIDUOUS TREE (2 INCH - 2.50 INCH CALIPER) GROUP A	26.000 EA				
1180	621.395 DWARF EVERGREENS (18 INCH - 24 INCH) GROUP A	14.000 EA				
1190	621.513 HYBRID RHODODENDRON (2.50 FOOT - 3 FOOT)	13.000 EA				
1200	621.552 DECIDUOUS SHRUBS (3 FOOT - 4 FOOT) GROUP A	3.000 EA				
1210	621.71 HERBACEOUS PERENNIALS GROUP A	198.000 EA				
1220	621.713 HERBACEOUS PERENNIALS & GROUND COVER	43.000 EA				
1230	621.80 ESTABLISHMENT PERIOD	LUMP SUM	LUMP SUM			
1240	623.09 REMOVE AND RESET MONUMENT	1.000 EA				
1250	625.01 WATER LINE SYSTEM	LUMP SUM	LUMP SUM			
1260	626.11 PRECAST CONCRETE JUNCTION BOX	6.000 EA				

Maine Department of Transportation

Proposal Schedule of Items

Proposal ID: 019282.00 **Project(s):** 019282.00

SECTION: 1 MAIN ITEMS

Alt Set ID: **Alt Mbr ID:**

Contractor: _____

Proposal Line Number	Item ID Description	Approximate Quantity and Units	Unit Price Dollars . Cents	Bid Amount Dollars . Cents
1270	626.22 NON-METALLIC CONDUIT	420.000 LF	_____.____	_____.____
1280	626.31 18 INCH FOUNDATION	4.000 EA	_____.____	_____.____
1290	626.341 LIGHT STANDARD FOUNDATION	23.000 EA	_____.____	_____.____
1300	626.35 CONTROLLER CABINET FOUNDATION	1.000 EA	_____.____	_____.____
1310	626.36 REMOVE OR MODIFY CONCRETE FOUNDATION	27.000 EA	_____.____	_____.____
1320	627.18 12 " SOLID WHITE PAVEMENT MARKING	1,170.000 LF	_____.____	_____.____
1330	627.733 4" WHITE OR YELLOW PAINTED PAVEMENT MARKING LINE	3,496.000 LF	_____.____	_____.____
1340	627.75 WHITE OR YELLOW PAVEMENT & CURB MARKING	1,501.000 SF	_____.____	_____.____
1350	627.76 TEMPORARY PAVEMENT MARKING LINE, WHITE OR YELLOW	LUMP SUM	LUMP SUM	_____.____
1360	627.77 REMOVING PAVEMENT MARKINGS	2,487.000 SF	_____.____	_____.____
1370	629.05 HAND LABOR, STRAIGHT TIME	90.000 HR	_____.____	_____.____

Maine Department of Transportation

Proposal Schedule of Items

Proposal ID: 019282.00 **Project(s):** 019282.00

SECTION: 1 MAIN ITEMS

Alt Set ID: **Alt Mbr ID:**

Contractor: _____

Proposal Line Number	Item ID Description	Approximate Quantity and Units	Unit Price Dollars	Unit Price Cents	Bid Amount Dollars	Bid Amount Cents
1380	631.12 ALL PURPOSE EXCAVATOR (INCLUDING OPERATOR)	120.000 HR				
1390	631.14 GRADER (INCLUDING OPERATOR)	60.000 HR				
1400	631.15 ROLLER, EARTH AND BASE COURSE (INCLUDING OPERATOR)	60.000 HR				
1410	631.172 TRUCK - LARGE (INCLUDING OPERATOR)	160.000 HR				
1420	631.22 FRONT END LOADER (INCLUDING OPERATOR)	80.000 HR				
1430	631.231 CRANE, 45 TON CAPACITY (INCLUDING OPERATOR)	40.000 HR				
1440	634.16 HIGHWAY LIGHTING	LUMP SUM	LUMP SUM			
1450	634.2102 TYPE B LIGHT STANDARD	10.000 EA				
1460	634.2103 TYPE 'C' LIGHT STANDARD	2.000 EA				
1470	637.071 DUST CONTROL	LUMP SUM	LUMP SUM			
1480	639.18 FIELD OFFICE TYPE A	1.000 EA				
1490	641.12 BENCH	9.000 EA				

Maine Department of Transportation

Proposal Schedule of Items

Proposal ID: 019282.00 **Project(s):** 019282.00

SECTION: 1 MAIN ITEMS

Alt Set ID: **Alt Mbr ID:**

Contractor: _____

Proposal Line Number	Item ID Description	Approximate Quantity and Units	Unit Price Dollars . Cents	Bid Amount Dollars . Cents
1500	641.34 TRASH RECEPTACLE	5.000 EA	_____.____	_____.____
1510	643.80 TRAFFIC SIGNALS AT BRIDGE ST & MAIN ST	LUMP SUM	LUMP SUM	_____.____
1520	643.86 TRAFFIC SIGNAL LOOP DETECTORS	6.000 EA	_____.____	_____.____
1530	643.91 MAST ARM POLE	3.000 EA	_____.____	_____.____
1540	643.92 PEDESTAL POLE	4.000 EA	_____.____	_____.____
1550	645.103 DEMOUNT GUIDE SIGN	23.000 EA	_____.____	_____.____
1560	645.106 DEMOUNT REGULATORY, WARNING, CONFIRMATION AND ROUTE MARKER ASSEMBLY SIGN	36.000 EA	_____.____	_____.____
1570	645.108 DEMOUNT POLE	22.000 EA	_____.____	_____.____
1580	645.113 REINSTALL GUIDE SIGN	18.000 EA	_____.____	_____.____
1590	645.116 REINSTALL REGULATORY, WARNING, CONFIRMATION AND ROUTE MARKER ASSEMBLY SIGN	6.000 EA	_____.____	_____.____
1600	645.118 REINSTALL POLE	3.000 EA	_____.____	_____.____
1610	645.291 ROADSIDE GUIDE SIGNS TYPE II	24.000 SF	_____.____	_____.____

Maine Department of Transportation

Proposal Schedule of Items

Proposal ID: 019282.00 **Project(s):** 019282.00

SECTION: 1 MAIN ITEMS

Alt Set ID: **Alt Mbr ID:**

Contractor: _____

Proposal Line Number	Item ID Description	Approximate Quantity and Units	Unit Price Dollars	Unit Price Cents	Bid Amount Dollars	Bid Amount Cents
1620	645.292 REGULATORY, WARNING, CONFIRMATION AND ROUTE MARKER ASSEMBLY SIGNS TYPE II	237.000 SF	_____	_____	_____	_____
1630	652.312 TYPE III BARRICADE	14.000 EA	_____	_____	_____	_____
1640	652.33 DRUM	40.000 EA	_____	_____	_____	_____
1650	652.34 CONE	40.000 EA	_____	_____	_____	_____
1660	652.35 CONSTRUCTION SIGNS	500.000 SF	_____	_____	_____	_____
1670	652.361 MAINTENANCE OF TRAFFIC CONTROL DEVICES	LUMP SUM	LUMP SUM		_____	_____
1680	652.38 FLAGGER	5,850.000 HR	_____	_____	_____	_____
1690	652.381 TRAFFIC OFFICER	250.000 HR	_____	_____	_____	_____
1700	652.41 PORTABLE CHANGEABLE MESSAGE SIGN	3.000 EA	_____	_____	_____	_____
1710	656.75 TEMPORARY SOIL EROSION AND WATER POLLUTION CONTROL	LUMP SUM	LUMP SUM		_____	_____
1720	659.10 MOBILIZATION	LUMP SUM	LUMP SUM		_____	_____
1730	822.315 TAPPING SLEEVE	3.000 EA	_____	_____	_____	_____

Maine Department of Transportation

Proposal Schedule of Items

Proposal ID: 019282.00 **Project(s):** 019282.00

SECTION: 1 MAIN ITEMS

Alt Set ID: **Alt Mbr ID:**

Contractor: _____

Proposal Line Number	Item ID Description	Approximate Quantity and Units	Unit Price		Bid Amount	
			Dollars	Cents	Dollars	Cents
1740	822.3225 6 INCH CLASS 52 DUCTILE IRON PIPE PUSH ON JOINT	105.000 LF	_____	_____	_____	_____
1750	822.3405 8 INCH CLASS 52 DUCTILE IRON PIPE PUSH ON JOINT	230.000 LF	_____	_____	_____	_____
1760	822.3605 12" CLASS 52 DUCTILE IRON PIPE PUSH ON JOINT	630.000 LF	_____	_____	_____	_____
1770	822.3632 12" CLASS 52 DUCTILE IRON PIPE RESTRAINED JOINT - PREINSULATED	320.000 LF	_____	_____	_____	_____
1780	822.3633 12" CLASS 52 DUCTILE IRON PIPE RESTRAINED JOINT	20.000 LF	_____	_____	_____	_____
1790	823.31 12 INCH GATE VALVE	4.000 EA	_____	_____	_____	_____
1800	823.325 8 INCH GATE VALVE	8.000 EA	_____	_____	_____	_____
1810	823.331 6 INCH GATE VALVE	7.000 EA	_____	_____	_____	_____
1820	823.332 GATE VALVE BOX, ADJUST TO GRADE	16.000 EA	_____	_____	_____	_____
1830	823.34 BLOW OFF VALVE ASSEMBLY	1.000 EA	_____	_____	_____	_____
1840	823.341 AIR RELEASE VALVE	3.000 EA	_____	_____	_____	_____

Maine Department of Transportation

Proposal Schedule of Items

Proposal ID: 019282.00 **Project(s):** 019282.00

SECTION: 1 MAIN ITEMS

Alt Set ID: **Alt Mbr ID:**

Contractor: _____

Proposal Line Number	Item ID Description	Approximate Quantity and Units	Unit Price Dollars	Unit Price Cents	Bid Amount Dollars	Bid Amount Cents
1850	824.30 FIRE HYDRANT	1.000 EA				
1860	824.32 REMOVE/RESET HYDRANT	2.000 EA				
1870	825.43 1" COPPER SERVICE	135.000 LF				
1880	825.431 1 1/2 INCH COPPER SERVICE	25.000 LF				
1890	827.301 ROCK EXCAVATION WATER MAIN	50.000 CY				
1900	827.302 UNSUITABLE SOIL EXCAVATION - BELOW GRADE	50.000 CY				
1910	827.362 GAS MAIN TRENCHING	320.000 LF				
1920	830.15 WATER MAIN BRIDGE CROSSING HANGER SYSTEM	LUMP SUM	LUMP SUM			
1930	830.16 GAS MAIN BRIDGE CROSSING HANGER SYSTEM	LUMP SUM	LUMP SUM			
1940	830.17 UTILITY CONDUIT BRIDGE CROSSING HANGER SYSTEM MULTI USE BR LIGHTING	LUMP SUM	LUMP SUM			
1950	830.17 UTILITY CONDUIT BRIDGE CROSSING HANGER SYSTEM LIGHTING	LUMP SUM	LUMP SUM			
1960	841.48 BOLLARDS	15.000 EA				

Maine Department of Transportation

Proposal Schedule of Items

Proposal ID: 019282.00 **Project(s):** 019282.00

SECTION: 1 MAIN ITEMS

Alt Set ID: **Alt Mbr ID:**

Contractor: _____

Proposal Line Number	Item ID Description	Approximate Quantity and Units	Unit Price Dollars	Unit Price Cents	Bid Amount Dollars	Bid Amount Cents
1970	841.481 REMOVABLE BOLLARD	3.000 EA				
1980	845.10 STRUCTURAL STEEL UTILITY SUPPORT	LUMP SUM	LUMP	SUM		
1990	910.301 SPECIAL WORK BUS SHELTER CONCRETE PAD	LUMP SUM	LUMP	SUM		
2000	910.301 SPECIAL WORK RIVERWALK REM & STACKED	LUMP SUM	LUMP	SUM		
2010	910.301 SPECIAL WORK REM & RESET PCMG WALL	LUMP SUM	LUMP	SUM		
2020	910.301 SPECIAL WORK CMP CONDUIT	LUMP SUM	LUMP	SUM		
2030	910.301 SPECIAL WORK FAIRPOINT APPROACH	LUMP SUM	LUMP	SUM		
2040	910.301 SPECIAL WORK UTILITY CONDUIT TWC APPROACH	LUMP SUM	LUMP	SUM		
2050	910.301 SPECIAL WORK FAIRPOINT & TWC BRIDGE CONDUITS	LUMP SUM	LUMP	SUM		
2060	910.301 SPECIAL WORK RIVERWALK OVERLOOKS	LUMP SUM	LUMP	SUM		

Section: 1 **Total:**

Maine Department of Transportation

Proposal Schedule of Items

Proposal ID: 019282.00 **Project(s):** 019282.00

SECTION: 2 RIVERWALK EXP OPTION NO.1

Alt Set ID: **Alt Mbr ID:**

Contractor: _____

Proposal Line Number	Item ID Description	Approximate Quantity and Units	Unit Price Dollars	Unit Price Cents	Bid Amount Dollars	Bid Amount Cents
2070	501.20 TIMBER PILE TREATED	400.000 LF	_____	_____	_____	_____
2080	910.301 SPECIAL WORK RIVERWALK EXPANSION AND REDECKING	LUMP SUM	LUMP SUM		_____	_____

Section: 2 **Total:** _____.____

Total Bid: _____.____

CONTRACT AGREEMENT, OFFER & AWARD

AGREEMENT made on the date last signed below, by and between the State of Maine, acting through and by its Department of Transportation (Department), an agency of state government with its principal administrative offices located at Child Street Augusta, Maine, with a mailing address at 16 State House Station, Augusta, Maine 04333-0016, and _____ a corporation or other legal entity organized under the laws of the State of _____, with its principal place of business located at _____ _____

The Department and the Contractor, in consideration of the mutual promises set forth in this Agreement (the "Contract"), hereby agree as follows:

A. The Work.

The Contractor agrees to complete all Work as specified or indicated in the Contract including Extra Work in conformity with the Contract, WIN 0**19282.00,** for the **Bridge Street bridge replacement** in the city of **Westbrook**, County of **Cumberland**, Maine. The Work includes construction, maintenance during construction, warranty as provided in the Contract, and other incidental work.

The Contractor shall be responsible for furnishing all supervision, labor, equipment, tools supplies, permanent materials and temporary materials required to perform the Work including construction quality control including inspection, testing and documentation, all required documentation at the conclusion of the project, warranting its work and performing all other work indicated in the Contract.

The Department shall have the right to alter the nature and extent of the Work as provided in the Contract; payment to be made as provided in the same.

B. Time.

The Contractor agrees to complete all Work, except warranty work, on or before **June 30, 2017.** Further, the Department may deduct from moneys otherwise due the Contractor, not as a penalty, but as Liquidated Damages in accordance with Sections 107.7 and 107.8 of the State of Maine Department of Transportation Standard Specifications, Revision of December 2002 and related Special Provisions.

C. Price.

The quantities given in the Schedule of Items of the Bid Package will be used as the basis for determining the original Contract amount and for determining the amounts of the required Performance Surety Bond and Payment Surety Bond, and that the amount of this offer is

Section 1 $_____

Section 2 $_____

Performance Bond and Payment Bond each being 100% of the amount awarded under this Contract (see award amount in Section G below).

D. Contract.

This Contract, which may be amended, modified, or supplemented in writing only, consists of the Contract documents as defined in the Plans, Standard Specifications, Revision of December 2002, Standard Details Revision of December 2002 as updated through advertisement, Supplemental Specifications, Special Provisions, Contract Agreement; and Contract Bonds. It is agreed and understood that this Contract will be governed by the documents listed above.

E. Certifications.

By signing below, the Contractor hereby certifies that to the best of the Contractor's knowledge and belief:

1. All of the statements, representations, covenants, and/or certifications required or set forth in the Bid and the Bid Documents, including those in Appendix A to Division 100 of the Standard Specifications Revision of December 2002 (Federal Contract Provisions Supplement), and the Contract are still complete and accurate as of the date of this Agreement.

2. The Contractor knows of no legal, contractual, or financial impediment to entering into this Contract.

3. The person signing below is legally authorized by the Contractor to sign this Contract on behalf of the Contractor and to legally bind the Contractor to the terms of the Contract.

F. Offer.

The undersigned, having carefully examined the site of work, the Plans, Standard Specifications Revision of December 2002, Standard Details Revision of December 2002 as updated through advertisement, Supplemental Specifications, Special Provisions, Contract Agreement; and Contract Bonds contained herein for construction of: **WIN 019282.00 Bridge Street bridge replacement plus other incidental work**, State of Maine, on which bids will be received until the time specified in the "Notice to Contractors" do(es) hereby bid and offer to enter into this contract to supply all the materials, tools, equipment and labor to construct the whole of the Work in strict accordance with the terms and conditions of this Contract at the unit prices in the attached "Schedule of Items".

The Offeror agrees to perform the work required at the price specified above and in accordance with the bids provided in the attached "Schedule of Items" in strict accordance with the terms of this solicitation, and to provide the appropriate insurance and bonds if this offer is accepted by the Government in writing.

As Offeror also agrees:

First: To do any extra work, not covered by the attached "Schedule of Items", which may be ordered by the Resident, and to accept as full compensation the amount determined upon a "Force Account" basis as provided in the Standard Specifications, Revision of December 2002, and as addressed in the contract documents.

Second: That the bid bond at 5% of the bid amount or the official bank check, cashier's check, certificate of deposit or U. S. Postal Money Order in the amount given in the "Notice to Contractors", payable to the Treasurer of the State of Maine and accompanying this bid, shall be forfeited, as liquidated damages, if in case this bid is accepted, and the undersigned shall fail to abide by the terms and conditions of the offer and fail to furnish satisfactory insurance and Contract bonds under the conditions stipulated in the Specifications within 15 days of notice of intent to award the contract.

Third: To begin the Work as stated in Section 107.2 of the Standard Specifications Revision of December 2002 and complete the Work within the time limits given in the Special Provisions of this Contract.

Fourth: The Contractor will be bound to the Disadvantaged Business Enterprise (DBE) Requirements contained in the attached Notice (Additional Instructions to Bidders) and submit a completed Contractor's Disadvantaged Business Enterprise Utilization Plan with their bid.

Fifth: That this offer shall remain open for 30 calendar days after the date of opening of bids.

Sixth: The Bidder hereby certifies, to the best of its knowledge and belief that: the Bidder has not, either directly or indirectly, entered into any agreement, participated in

any collusion, or otherwise taken any action in restraint of competitive bidding in connection with its bid, and its subsequent contract with the Department.

IN WITNESS WHEREOF, the Contractor, for itself, its successors and assigns, hereby execute two duplicate originals of this Agreement and thereby binds itself to all covenants, terms, and obligations contained in the Contract Documents.

CONTRACTOR

_____	_____
Date	(Signature of Legally Authorized Representative of the Contractor)
_____	_____
Witness	(Name and Title Printed)

G. Award.

Your offer is hereby accepted for (see checked boxes):

Section 1 ❑
Section 2 ❑

Contract Amount: _____

This award consummates the Contract, and the documents referenced herein.

MAINE DEPARTMENT OF TRANSPORTATION

_____	_____
Date	By: David Bernhardt, Commissioner
_____	
Witness	

CONTRACT AGREEMENT, OFFER & AWARD

AGREEMENT made on the date last signed below, by and between the State of Maine, acting through and by its Department of Transportation (Department), an agency of state government with its principal administrative offices located at Child Street Augusta, Maine, with a mailing address at 16 State House Station, Augusta, Maine 04333-0016, and _____ a corporation or other legal entity organized under the laws of the State of _____, with its principal place of business located at _____ _____

The Department and the Contractor, in consideration of the mutual promises set forth in this Agreement (the "Contract"), hereby agree as follows:

A. The Work.

The Contractor agrees to complete all Work as specified or indicated in the Contract including Extra Work in conformity with the Contract, WIN 0**19282.00,** for the **Bridge Street bridge replacement** in the city of **Westbrook**, County of **Cumberland**, Maine. The Work includes construction, maintenance during construction, warranty as provided in the Contract, and other incidental work.

The Contractor shall be responsible for furnishing all supervision, labor, equipment, tools supplies, permanent materials and temporary materials required to perform the Work including construction quality control including inspection, testing and documentation, all required documentation at the conclusion of the project, warranting its work and performing all other work indicated in the Contract.

The Department shall have the right to alter the nature and extent of the Work as provided in the Contract; payment to be made as provided in the same.

B. Time.

The Contractor agrees to complete all Work, except warranty work, on or before **June 30, 2017.** Further, the Department may deduct from moneys otherwise due the Contractor, not as a penalty, but as Liquidated Damages in accordance with Sections 107.7 and 107.8 of the State of Maine Department of Transportation Standard Specifications, Revision of December 2002 and related Special Provisions.

C. Price.

The quantities given in the Schedule of Items of the Bid Package will be used as the basis for determining the original Contract amount and for determining the amounts of the required Performance Surety Bond and Payment Surety Bond, and that the amount of this offer is

Section 1 $_____

Section 2 $_____

Performance Bond and Payment Bond each being 100% of the amount awarded under this Contract (see award amount in Section G below).

D. Contract.

This Contract, which may be amended, modified, or supplemented in writing only, consists of the Contract documents as defined in the Plans, Standard Specifications, Revision of December 2002, Standard Details Revision of December 2002 as updated through advertisement, Supplemental Specifications, Special Provisions, Contract Agreement; and Contract Bonds. It is agreed and understood that this Contract will be governed by the documents listed above.

E. Certifications.

By signing below, the Contractor hereby certifies that to the best of the Contractor's knowledge and belief:

1. All of the statements, representations, covenants, and/or certifications required or set forth in the Bid and the Bid Documents, including those in Appendix A to Division 100 of the Standard Specifications Revision of December 2002 (Federal Contract Provisions Supplement), and the Contract are still complete and accurate as of the date of this Agreement.

2. The Contractor knows of no legal, contractual, or financial impediment to entering into this Contract.

3. The person signing below is legally authorized by the Contractor to sign this Contract on behalf of the Contractor and to legally bind the Contractor to the terms of the Contract.

F. Offer.

The undersigned, having carefully examined the site of work, the Plans, Standard Specifications Revision of December 2002, Standard Details Revision of December 2002 as updated through advertisement, Supplemental Specifications, Special Provisions, Contract Agreement; and Contract Bonds contained herein for construction of: **WIN 019282.00 Bridge Street bridge replacement plus other incidental work**, State of Maine, on which bids will be received until the time specified in the "Notice to Contractors" do(es) hereby bid and offer to enter into this contract to supply all the materials, tools, equipment and labor to construct the whole of the Work in strict accordance with the terms and conditions of this Contract at the unit prices in the attached "Schedule of Items".

The Offeror agrees to perform the work required at the price specified above and in accordance with the bids provided in the attached "Schedule of Items" in strict accordance with the terms of this solicitation, and to provide the appropriate insurance and bonds if this offer is accepted by the Government in writing.

As Offeror also agrees:

First: To do any extra work, not covered by the attached "Schedule of Items", which may be ordered by the Resident, and to accept as full compensation the amount determined upon a "Force Account" basis as provided in the Standard Specifications, Revision of December 2002, and as addressed in the contract documents.

Second: That the bid bond at 5% of the bid amount or the official bank check, cashier's check, certificate of deposit or U. S. Postal Money Order in the amount given in the "Notice to Contractors", payable to the Treasurer of the State of Maine and accompanying this bid, shall be forfeited, as liquidated damages, if in case this bid is accepted, and the undersigned shall fail to abide by the terms and conditions of the offer and fail to furnish satisfactory insurance and Contract bonds under the conditions stipulated in the Specifications within 15 days of notice of intent to award the contract.

Third: To begin the Work as stated in Section 107.2 of the Standard Specifications Revision of December 2002 and complete the Work within the time limits given in the Special Provisions of this Contract.

Fourth: The Contractor will be bound to the Disadvantaged Business Enterprise (DBE) Requirements contained in the attached Notice (Additional Instructions to Bidders) and submit a completed Contractor's Disadvantaged Business Enterprise Utilization Plan with their bid.

Fifth: That this offer shall remain open for 30 calendar days after the date of opening of bids.

Sixth: The Bidder hereby certifies, to the best of its knowledge and belief that: the Bidder has not, either directly or indirectly, entered into any agreement, participated in

any collusion, or otherwise taken any action in restraint of competitive bidding in connection with its bid, and its subsequent contract with the Department.

IN WITNESS WHEREOF, the Contractor, for itself, its successors and assigns, hereby execute two duplicate originals of this Agreement and thereby binds itself to all covenants, terms, and obligations contained in the Contract Documents.

CONTRACTOR

_____	_____
Date	(Signature of Legally Authorized Representative of the Contractor)
_____	_____
Witness	(Name and Title Printed)

G. Award.

Your offer is hereby accepted for (see checked boxes):

Section 1 ❑
Section 2 ❑

Contract Amount: _____

This award consummates the Contract, and the documents referenced herein.

MAINE DEPARTMENT OF TRANSPORTATION

_____	_____
Date	By: David Bernhardt, Commissioner
_____	
Witness	

CONTRACT AGREEMENT, OFFER & AWARD

AGREEMENT made on the date last signed below, by and between the State of Maine, acting through and by its Department of Transportation (Department), an agency of state government with its principal administrative offices located at Child Street Augusta, Maine, with a mailing address at 16 State House Station, Augusta, Maine 04333-0016, and **(Name of the firm bidding the job)** a corporation or other legal entity organized under the laws of the State of Maine, with its principal place of business located at **(address of the firm bidding the job)**

The Department and the Contractor, in consideration of the mutual promises set forth in this Agreement (the "Contract"), hereby agree as follows:

SAMPLE

A. The Work.

The Contractor agrees to complete all Work as specified or indicated in the Contract including Extra Work in conformity with the Contract, PIN No.**1224.00**, for the **Hot Mix Asphalt Overlay** in the town/city of **South Nowhere,** County of **Washington**, Maine. The Work includes construction, maintenance during construction, warranty as provided in the Contract, and other incidental work.

The Contractor shall be responsible for furnishing all supervision, labor, equipment, tools supplies, permanent materials and temporary materials required to perform the Work including construction quality control including inspection, testing and documentation, all required documentation at the conclusion of the project, warranting its work and performing all other work indicated in the Contract.

The Department shall have the right to alter the nature and extent of the Work as provided in the Contract; payment to be made as provided in the same.

B. Time.

The Contractor agrees to complete all Work, except warranty work, on or before **November 15, 2006.** Further, the Department may deduct from moneys otherwise due the Contractor, not as a penalty, but as Liquidated Damages in accordance with Sections 107.7 and 107.8 of the State of Maine Department of Transportation Standard Specifications, Revision of December 2002 and related Special Provisions.

C. Price.

The quantities given in the Schedule of Items of the Bid Package will be used as the basis for determining the original Contract amount and for determining the amounts of the required Performance Surety Bond and Payment Surety Bond, and that the amount of this offer is **____(Place bid here in alphabetical form such as One Hundred and Two dollars and 10 cents)** **$_ (repeat bid here in numerical terms, such as $102.10)**_____ Performance Bond and Payment Bond each being 100% of the amount of this Contract.

D. Contract.

This Contract, which may be amended, modified, or supplemented in writing only, consists of the Contract documents as defined in the Plans, Standard Specifications, Revision of December 2002, Standard Details Revision of December 2002, Supplemental Specifications, Special Provisions, Contract Agreement; and Contract Bonds. It is agreed and understood that this Contract will be governed by the documents listed above.

E. Certifications.

By signing below, the Contractor hereby certifies that to the best of the Contractor's knowledge and belief:

1. All of the statements, representations, covenants, and/or certifications required or set forth in the Bid and the Bid Documents, including those in Appendix A to Division 100 of the Standard Specifications Revision of December 2002 (Federal Contract Provisions Supplement), and the Contract are still complete and accurate as of the date of this Agreement.

2. The Contractor knows of no legal, contractual, or financial impediment to entering into this Contract.

3. The person signing below is legally authorized by the Contractor to sign this Contract on behalf of the Contractor and to legally bind the Contractor to the terms of the Contract.

SAMPLE

F. Offer.

The undersigned, having carefully examined the site of work, the Plans, Standard Specifications, Revision of December 2002, Standard Details Revision of December 2002, Supplemental Specifications, Special Provisions, Contract Agreement; and Contract Bonds contained herein for construction of:

PIN 1234.00 South Nowhere, Hot Mix Asphalt Overlay,

State of Maine, on which bids will be received until the time specified in the "Notice to Contractors" do(es) hereby bid and offer to enter into this contract to supply all the materials, tools, equipment and labor to construct the whole of the Work in strict accordance with the terms and conditions of this Contract at the unit prices in the attached "Schedule of Items".

The Offeror agrees to perform the work required at the price specified above and in accordance with the bids provided in the attached "Schedule of Items" in strict accordance with the terms of this solicitation, and to provide the appropriate insurance and bonds if this offer is accepted by the Government in writing.

As Offeror also agrees:

First: To do any extra work, not covered by the attached "Schedule of Items", which may be ordered by the Resident, and to accept as full compensation the amount determined upon a "Force Account" basis as provided in the Standard Specifications, Revision of December 2002, and as addressed in the contract documents.

Second: That the bid bond at 5% of the bid amount or the official bank check, cashier's check, certificate of deposit or U. S. Postal Money Order in the amount given in the "Notice to Contractors", payable to the Treasurer of the State of Maine and accompanying this bid, shall be forfeited, as liquidated damages, if in case this bid is accepted, and the undersigned shall fail to abide by the terms and conditions of the offer and fail to furnish satisfactory insurance and Contract bonds under the conditions stipulated in the Specifications within 15 days of notice of intent to award the contract.

Third: To begin the Work as stated in Section 107.2 of the Standard Specifications Revision of 2002 and complete the Work within the time limits given in the Special Provisions of this Contract.

Fourth: The Contractor will be bound to the Disadvantaged Business Enterprise (DBE) Requirements contained in the attached Notice (Additional Instructions to Bidders) and submit a completed Contractor's Disadvantaged Business Enterprise Utilization Plan with their bid.

Fifth: That this offer shall remain open for 30 calendar days after the date of opening of bids.

SAMPLE

Sixth: The Bidder hereby certifies, to the best of its knowledge and belief that: the Bidder has not, either directly or indirectly, entered into any agreement, participated in any collusion, or otherwise taken any action in restraint of competitive bidding in connection with its bid, and its subsequent contract with the Department.

IN WITNESS WHEREOF, the Contractor, for itself, its successors and assigns, hereby execute two duplicate originals of this Agreement and thereby binds itself to all covenants, terms, and obligations contained in the Contract Documents.

CONTRACTOR

_____	**(Sign Here)**
Date	(Signature of Legally Authorized Representative of the Contractor)
____(**Witness Sign Here)**	**(Print Name Here)**
Witness	(Name and Title Printed)

SAMPLE

G. Award.

Your offer is hereby accepted. This award consummates the Contract, and the documents referenced herein.

MAINE DEPARTMENT OF TRANSPORTATION

_____	_____
Date	By: David A. Cole, Commissioner

_____
(Witness)

BOND # _____

CONTRACT PERFORMANCE BOND
(Surety Company Form)

KNOW ALL MEN BY THESE PRESENTS: That _____ _____ **in the State of** _____, as principal, and……....., a corporation duly organized under the laws of the State of ..... and having a usual place of business ...., as Surety, are held and firmly bound unto the Treasurer of the State of Maine in the sum of _____ **and 00/100 Dollars ($)**, to be paid said Treasurer of the State of Maine or his successors in office, for which payment well and truly to be made, Principal and Surety bind themselves, their heirs, executors and administrators, successors and assigns, jointly and severally by these presents.

The condition of this obligation is such that if the Principal designated as Contractor in the Contract to construct Project Number _____ in the Municipality of _____ promptly and faithfully performs the Contract, then this obligation shall be null and void; otherwise it shall remain in full force and effect.

The Surety hereby waives notice of any alteration or extension of time made by the State of Maine.

Signed and sealed this ..... day of ....., 20….. .

WITNESSES:	SIGNATURES:
	CONTRACTOR:
Signature.....	.....….....
Print Name Legibly	Print Name Legibly ...….....
	SURETY:
Signature	....….....
Print Name Legibly	Print Name Legibly .....
SURETY ADDRESS:	NAME OF LOCAL AGENCY:
.....	ADDRESS .....
.....	...…….....
.....	.....…….....
TELEPHONE.....	.....…….....

SAMPLE

BOND # _____

CONTRACT PAYMENT BOND
(Surety Company Form)

KNOW ALL MEN BY THESE PRESENTS: That _____ _____ **in the State of** _____, as principal, and.....….....
a corporation duly organized under the laws of the State of ..... and having a usual place of business in .....……., as Surety, are held and firmly bound unto the Treasurer of the State of Maine for the use and benefit of claimants as herein below defined, in the sum of _____ **and 00/100 Dollars ($)** for the payment whereof Principal and Surety bind themselves, their heirs, executors and administrators, successors and assigns, jointly and severally by these presents.

The condition of this obligation is such that if the Principal designated as Contractor in the Contract to construct Project Number _____ in the Municipality of _____ promptly satisfies all claims and demands incurred for all labor and material, used or required by him in connection with the work contemplated by said Contract, and fully reimburses the obligee for all outlay and expense which the obligee may incur in making good any default of said Principal, then this obligation shall be null and void; otherwise it shall remain in full force and effect.

A claimant is defined as one having a direct contract with the Principal or with a Subcontractor of the Principal for labor, material or both, used or reasonably required for use in the performance of the contract.

Signed and sealed this ..... day of ...……....., 20 ... .

WITNESS:	SIGNATURES:
	CONTRACTOR:
Signature…….....	.....….....
Print Name Legibly .....……..	Print Name Legibly ….....
	SURETY:
Signature.....	...….....
Print Name Legibly	Print Name Legibly ….....
SURETY ADDRESS:	NAME OF LOCAL AGENCY:
...….....	ADDRESS ….....
.....	…….....
TELEPHONE	…….....

SAMPLE

Maine DOT Map

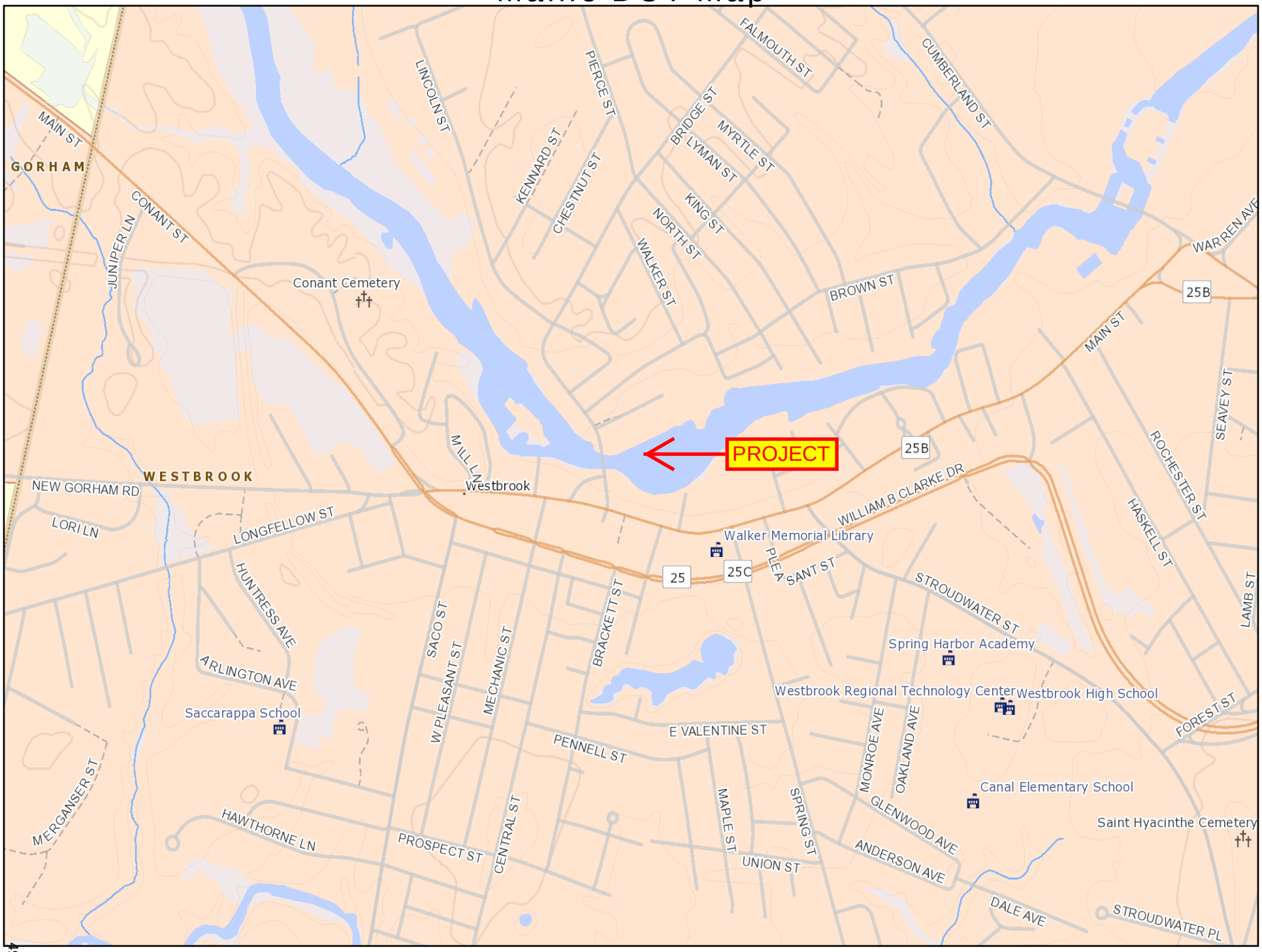

Map Generated on Monday, September 29, 2014 11:25:05 AM

Map Scale 1:11843

The Maine Department of Transportation provides this publication for information only. Reliance upon this information is at user risk. It is subject to revision and may be incomplete depending upon changing conditions. The Department assumes no liability if injuries or damages result from this information. This map is not intended to support emergency dispatch. Road names used on this map may not match official road names.

General Roads

- *Interstate*
- *US Routes*
- *State Routes*
- *Public Roads*

MaineDOT Regions

State Urban

Water Bodies

Boundary Lines

- *coastline*
- *county*
- *state*
- *town*

Wetlands

Conserved Lands

General Decision Number: ME140050 08/22/2014 ME50

Superseded General Decision Number: ME20130050

State: Maine

Construction Type: Highway

County: Cumberland County in Maine.

HIGHWAY CONSTRUCTION PROJECTS (excluding tunnels, building structures in rest area projects & railroad construction; bascule, suspension & spandrel arch bridges designed for commercial navigation, bridges involving marine construction; and other major bridges).

Modification Number	Publication Date
0	01/03/2014
1	08/08/2014
2	08/22/2014

* ENGI0004-006 04/01/2014

	Rates	Fringes
POWER EQUIPMENT OPERATOR:		
Milling Machine.....	$ 20.75	10.84

SUME2011-045 09/14/2011

	Rates	Fringes
CARPENTER, Includes Form Work....	$ 17.10	1.95
CEMENT MASON/CONCRETE FINISHER...	$ 16.94	0.00
ELECTRICIAN.....	$ 17.90	3.69
INSTALLER - GUARDRAIL.....	$ 16.47	1.85
IRONWORKER, REINFORCING.....	$ 18.79	0.00
IRONWORKER, STRUCTURAL.....	$ 18.75	4.56
LABORER: Asphalt Raker.....	$ 15.79	1.45
LABORER: Common or General.....	$ 13.15	1.08
LABORER: Flagger.....	$ 9.00	0.00
LABORER: Landscape.....	$ 14.92	2.30
LABORER: Wheelman.....	$ 18.76	4.93

OPERATOR: Backhoe.....$ 19.38 2.52

OPERATOR: Bobcat/Skid
Steer/Skid Loader.....$ 17.64 4.50

OPERATOR: Broom/Sweeper.....$ 14.92 2.31

OPERATOR: Bulldozer.....$ 18.57 3.88

OPERATOR: Crane.....$ 21.15 0.00

OPERATOR: Excavator.....$ 18.81 1.31

OPERATOR: Grader/Blade.....$ 27.40 8.46

OPERATOR: Loader.....$ 16.40 3.39

OPERATOR: Mechanic.....$ 23.27 6.28

OPERATOR: Milling Machine
Reclaimer Combo.....$ 24.77 8.39

OPERATOR: Paver (Asphalt,
Aggregate, and Concrete).....$ 18.16 4.74

OPERATOR: Roller excluding
Asphalt.....$ 17.00 4.08

OPERATOR: Screed.....$ 19.98 5.46

PILEDRIVERMAN.....$ 19.95 5.26

TRUCK DRIVER, Includes all
axles including Dump Trucks.....$ 14.65 2.87

TRUCK DRIVER: Lowboy Truck.....$ 15.15 5.62

WELDERS - Receive rate prescribed for craft performing operation to which welding is incidental.

==========

Unlisted classifications needed for work not included within the scope of the classifications listed may be added after award only as provided in the labor standards contract clauses (29CFR 5.5 (a) (1) (ii)).

The body of each wage determination lists the classification and wage rates that have been found to be prevailing for the

cited type(s) of construction in the area covered by the wage determination. The classifications are listed in alphabetical order of "identifiers" that indicate whether the particular rate is union or non-union.

Union Identifiers

An identifier enclosed in dotted lines beginning with characters other than "SU" denotes that the union classification and rate have found to be prevailing for that classification. Example: PLUM0198-005 07/01/2011. The first four letters , PLUM, indicate the international union and the four-digit number, 0198, that follows indicates the local union number or district council number where applicable , i.e., Plumbers Local 0198. The next number, 005 in the example, is an internal number used in processing the wage determination. The date, 07/01/2011, following these characters is the effective date of the most current negotiated rate/collective bargaining agreement which would be July 1, 2011 in the above example.

Union prevailing wage rates will be updated to reflect any changes in the collective bargaining agreements governing the rates.

0000/9999: weighted union wage rates will be published annually each January.

Non-Union Identifiers

Classifications listed under an "SU" identifier were derived from survey data by computing average rates and are not union rates; however, the data used in computing these rates may include both union and non-union data. Example: SULA2004-007 5/13/2010. SU indicates the rates are not union majority rates, LA indicates the State of Louisiana; 2004 is the year of the survey; and 007 is an internal number used in producing the wage determination. A 1993 or later date, 5/13/2010, indicates the classifications and rates under that identifier were issued as a General Wage Determination on that date.

Survey wage rates will remain in effect and will not change until a new survey is conducted.

WAGE DETERMINATION APPEALS PROCESS

1.) Has there been an initial decision in the matter? This can be:

* an existing published wage determination
* a survey underlying a wage determination
* a Wage and Hour Division letter setting forth a position on a wage determination matter
* a conformance (additional classification and rate) ruling

On survey related matters, initial contact, including requests for summaries of surveys, should be with the Wage and Hour Regional Office for the area in which the survey was conducted because those Regional Offices have responsibility for the Davis-Bacon survey program. If the response from this initial contact is not satisfactory, then the process described in 2.) and 3.) should be followed.

With regard to any other matter not yet ripe for the formal process described here, initial contact should be with the Branch of Construction Wage Determinations. Write to:

Branch of Construction Wage Determinations
Wage and Hour Division
U.S. Department of Labor
200 Constitution Avenue, N.W.
Washington, DC 20210

2.) If the answer to the question in 1.) is yes, then an interested party (those affected by the action) can request review and reconsideration from the Wage and Hour Administrator (See 29 CFR Part 1.8 and 29 CFR Part 7). Write to:

Wage and Hour Administrator
U.S. Department of Labor
200 Constitution Avenue, N.W.
Washington, DC 20210

The request should be accompanied by a full statement of the interested party's position and by any information (wage payment data, project description, area practice material, etc.) that the requestor considers relevant to the issue.

3.) If the decision of the Administrator is not favorable, an interested party may appeal directly to the Administrative Review Board (formerly the Wage Appeals Board). Write to:

Administrative Review Board
U.S. Department of Labor
200 Constitution Avenue, N.W.
Washington, DC 20210

4.) All decisions by the Administrative Review Board are final.

==========

END OF GENERAL DECISION

Westbrook
Bridge Street Bridge
WIN 019282.00
September 30, 2014

MaineDOT DBE Project Attainment Target (PAT)
for this Project is **.04 %**

The MaineDOT seeks to meet the specified annual Disadvantaged Business Enterprise (DBE) usage goal set out by 49 CFR 26.45 through the efforts of contractors seeking to employ qualified DBE subcontractors. We seek to meet this goal by race neutral means and do not, at this time, use contract specific requirements for each project. We do however, understand the capacity of Maine's DBE community and the unique characteristics a project may have that would differ from the broad annual goal.

Taking this into consideration, the MaineDOT will review each project and develop an anticipated attainment or Project Attainment Target (PAT) based on several factors that are project specific. Those factors include:

- ☐ Scope of Work
- ☐ DBE availability according to Specification Item
- ☐ Geographic location
- ☐ DBE capacity

This PAT is developed to assist contractors to better understand the DBE participation that the MaineDOT can reasonably expect for a specific project. The PAT is NOT a mandate but an assessment of the DBE opportunities that this project could meet or exceed. MaineDOT anticipates that each contractor will make the best effort to reach or exceed the PAT for this project.

City: **Westbrook**
Project: **19282.00**
Date: **November 6, 2014**

SPECIAL PROVISIONS
SECTION 104
Utilities

UTILITY COORDINATION

The contractor has primary responsibility for utility coordination after contract award. The contractor shall communicate directly with the utilities regarding any utility work necessary to prevent project construction delays.

THE CONTRACTOR SHALL PLAN AND CONDUCT WORK ACCORDINGLY.

MEETING

A Preconstruction Utility Conference, as defined in Subsection 104.4.6 of the Standard Specifications **is** required.

GENERAL INFORMATION

These Special Provisions outline the arrangements that have been made by the Department for utility and/or railroad work to be undertaken in conjunction with this project. The following list identifies all known utilities or railroads having facilities presently located within the limits of this project or intending to install facilities during project construction.

Utilities have been notified and will be furnished a project specification.

Overview:

Utility	Aerial	Underground
Central Maine Power Company		X
Northern New England Telephone Operations, LLC (FairPoint)		X
Portland Water District		X
Sappi Fine Paper	X	X
Time Warner Cable		X
Unitil Corp.		X

Utility Contact Information		
Utility	**Contact Person**	**Contact Phone**
Central Maine Power Company	Marshall Ripley	791-1095
Northern New England Telephone Operation, LLC (FairPoint)	Marty Pease	797-1119
Portland Water District	Tim McMullin	523-5242
Sappi Fine Paper	Barry Stemm	856-4584
Time Warner Cable	Mark Pelletier	253-2324
Unitil Service Corp.	Lynn Best	(603) 294-5117

Unless otherwise specified, any underground utility facilities shown on the project plans represent approximate locations gathered from available information. The Department cannot certify the level of accuracy of this data. Underground facilities indicated on the topographic sheets (plan views) have been collected from historical records and/or on-site designations provided by the respective utility companies. Underground facilities indicated on the cross-sections have been carried over from the plan view data and may also include further approximations of the elevations (depths) based upon straight-line interpolation from the nearest manholes, gate valves, or test pits.

It shall be the responsibility of the Contractor to verify the location and depth of the existing underground utility facilities prior to starting construction work (both DOT work and the utility work). The Contractor has to physically expose the existing buried utility facilities by excavation or vacuum extraction. This shall be discussed in greater detail at the pre-construction utility meeting.

All adjustments are to be made by the respective utility/railroad unless otherwise specified herein.

All clearing and tree removal in areas where utilities are involved must be completed before the utilities are able to relocate their facilities.

Fire hydrants shall not be disturbed until all necessary work has been accomplished to provide proper fire protection.

Utility working days are Monday through Friday. Times are estimated on the basis of a single crew for each utility. Any times and dates mentioned are **estimates only** and are dependent upon favorable weather, working conditions, and freedom from emergencies. The Contractor shall have no claim against the Department if they are exceeded.

SUBSURFACE

Utility	Summary of Work	Estimated Working Days
Central Maine Power Company (CMP)	Install wires and tie-in facilities at MH's on each end of bridge	**2**
Northern New England Telephone Operations, LLC (FairPoint)	All work to be done by the Contractor	**0**
Portland Water Company (PWD)	All work to be done by the Contractor	**0**
Sappi Fine Paper	Their work is to be completed by June 1, 2015	**0**
Time Warner Cable (TWC)	All work to be done by the Contractor	**0**
Unitil Service Corp.	Install new gas main in approaches & on the bridge	**15**
	Total:	**17**

Utility Specific Issues:

** **Special Note to Contractor**

All utility work will be done during night time hours as approved by MaineDOT's Resident.

Central Maine Power Co. (CMP)

CMP's plan is to have the Contractor install a (9) way schedule 40 PVC concrete encased duct bank system from a tie-in point located at Sta. 10+11.85 – 22.12' LT to a vault located at Sta. 12+00.15 – 8.13' LT continue across the bridge onto a hanger system to the vault located at Sta. 15+25 – 2.09' LT and ending at the vault located at Sta. 15+25 – 2.09' LT. Please see Special Provision Section 910 – Special Work (Utility Conduit - Central Maine Power Company) for complete details regarding this work. CMP estimates 2 working days to run their conductors and tie into their existing facilities.

Northern New England Telephone Operations, LLC (FairPoint Communications)

FairPoint is planning is to have the Contractor install a (6) 4" PVC Schedule 40 concrete encased duct bank to Sta. 12+16.75 through a steel sleeve across the bridge onto a hanger system with (6) 4" IPS/XW fiberglass conduits to Sta. 14+30.25 then back to a (6) PVC Schedule 40 concrete encased duct bank system. Please see Special Provision Section 910 – Special Work (Utility Conduit – FairPoint Communications – Approaches Only) and (Utility Conduit – FairPoint Communications – Bridge Only) for complete details regarding this work. FairPoint does not require any working days as this work is for future use.

Portland Water District

The utility is planning to install 975 ft. of 12-inch ductile iron water main from Sta. 22+00 to 26+00 on Main St and from Sta. 9+75 to Sta.15+50 on Bridge St including hanger attachments to bridge. This water main is on the right of center line.

Sappi Fine Paper North

The transmission line that goes through the abutment is to be relocated. These facilities from Sappi's Power House will be removed from within the project limits and placed into the distribution lines on Dana Court. Sappi is responsible for the installation of components necessary to tie into CMP grid on Dana Court from their powerhouse and the removal of the transmission lines through the project limits. This work is anticipated to be completed by June 1, 2015.

Time Warner Cable

The Contactor will install one (1) conduit with hangers attached to the new bridge, and in the new bridge approaches, this work is in combination (six (6) conduits) with FairPoint Communications. Please see Special Provision Section 910 – Special Work (Utility Conduit – Time Warner Cable – Approaches Only) and (Utility Conduit – TWC – Bridge Only) for complete details regarding this work. TWC does not require any working days as this work is for future use.

Unitil Service Corp.

The utility plans to install a new gas main between Sta. 4+50+/- to Sta. 8+75+/ - 425+/- Ft. The Company will provide hangers with rollers and 10 inch steel sleeves. They shall assemble weld and install permanent 6 inch steel gas mains. The Contractor shall assist the gas company with the installation of the permanent gas mains. The Contractor shall excavate and back fill the trench for the permanent gas mains. Please refer to see Special Provisions Section 827 & 830 for greater detail. The Utility estimates 15 working days to complete their installation.

MAINTAINING UTILITY LOCATION MARKINGS

The Contractor will be responsible for maintaining the buried utility location markings following the initial locating by the appropriate utility or their designated representative.

UTILITY SIGNING

Any utility working within the construction limits of this project shall ensure that the traveling public is adequately protected at all times. All work areas shall be signed, lighted, and traffic flaggers employed as determined by field conditions. All traffic controls shall be in accordance with the latest edition of the Manual on Uniform Traffic Control Devices for Streets and Highways, as issued by the Federal Highway Administration.

July 16, 2009

SPECIAL PROVISION
SECTION 102.3
EXAMINATION OF DOCUMENTS, SITE, AND OTHER INFORMATION
(Geotechnical Information)

Add the following to Section 102.3, Examination of Documents, Site and Other Information:

102.3.1 Geotechnical Information In most cases, Geotechnical Information pertaining to the project has been collected and assembled. Bidders and Contractors are obligated to examine and, if necessary, obtain geotechnical information. If one is available, the project geotechnical report may be accessed at the following web address:

http://www.maine.gov/mdot/contractors/

The Department shall not be responsible for the Bidders' and Contractors' interpretations of or estimates or conclusions drawn from the Geotechnical Information. Data provided may not be representative of the subsurface conditions between the boring locations.

This section does not diminish the duties imposed upon parties in Section 102 or in any other sections.

April 10, 2013
Supersedes December 17, 2010

SPECIAL PROVISION
SECTION 104
GENERAL RIGHTS AND RESPONSIBILITIES
(Electronic Payroll Submission)
(Payment Tracking)

104.3.8.1 Electronic Payroll Submission The prime contractor and all subcontractors and lower-tier subcontractors will submit their certified payrolls electronically on this contract utilizing the Elation System web based reporting. There is no charge to the contracting community for the use of this service. The submission of paper payrolls will not be allowed or accepted. Additional information can be found at http://www.maine.gov/mdot/contractors/ under the "Quick Links".

104.3.8.2 Payment Tracking The prime contractor and all subcontractors and lower-tier subcontractors will track and confirm the delivery and receipt of all payments through the Elation System

SPECIAL PROVISION
SECTION 104.5.5
GENERAL RIGHTS AND RESPONSIBILITIES
Prompt Payment of Subcontractors

104.5.5

104.5.5 Prompt Payment of Subcontractors

A. Pay When Paid The Contractor shall pay Subcontractors for all Work satisfactorily performed and Invoiced by the Subcontractor no later than 30 Days from the date the Contractor receives payment from the Department for such Subcontractor's Work.

B. Payment Tracking Federal Projects On federally funded projects, the prime contractor, subcontractors and lower-tier subcontractors will track and confirm the delivery and receipt of all payments through the Elation System. They will be responsible for entering all payments to all sub and lower tier contractors. MaineDOT will run a query monthly to ensure that contractors are complying and generate an e-mail to contractors who have not responded to confirm receipt of MaineDOT payment or contractor payment to lower tier subcontractors.

C. Retainage The Contractor shall return to the Subcontractor all retainage withheld from the Subcontractor within 30 Days after the date the Subcontractor's Work is satisfactorily completed. If there is a Delay in such return of retainage, the Subcontractor may pursue all rights it may have under the claims procedure referenced in Section 104.5.6 - Subcontractor Claims for Payment.

December 5, 2011
Supersedes December 1, 2010

SPECIAL PROVISION
SECTION 105
GENERAL SCOPE OF WORK
(Buy America Certification)

105.11 Federal Requirements Add the following as the third and subsequent paragraphs:

"Prior to payment by the Department, the Contractor shall provide a certification from the producer of steel or iron, or any product containing steel or iron as a component, stating that all steel or iron furnished or incorporated into the furnished product was manufactured in the United States in accordance with the requirements of the Buy America provisions of 23 CFR 635.410, as amended. Such certification shall also include (1) a statement that the iron or steel product or component was produced entirely within the United States, or (2) a statement that the iron or steel product or component was produced within the United States except for minimal quantities of foreign steel and iron valued at $ (actual value).

All manufacturing processes must take place domestically. Manufacturing begins with the initial melting and mixing, and continues through the coating stage. Any process which modifies the chemical content, the physical size and shape, or the final finish is considered a manufacturing process. These processes include rolling, extruding, machining, bending, grinding, drilling, and coating. "Coating" includes epoxy coating, galvanizing, painting, or any other coating that protects or enhances the value of the material.

A Buy America Certification is required from each manufacturer, fabricator, supplier, subcontractor, etc. that meets the "manufacturing" definition above.

Buy America does not apply to raw materials (iron ore and alloys), scrap, pig iron, or processed, pelletized, and reduced iron ore."

SPECIAL PROVISION 105
GENERAL SCOPE OF WORK
Equal Opportunity and Civil Rights
(Disadvantaged Business Enterprises Program)

105.10.1.1 Disadvantaged Business Enterprises Program The Maine Department of Transportation (MaineDOT) has established a Disadvantaged Business Enterprise (DBE) program in accordance with regulations of the United States Department of Transportation (USDOT), 49 CFR Part 26. The MaineDOT receives federal financial assistance from USDOT, and as a condition of receiving this assistance, the Department has signed an assurance that it will comply with 49 CFR Part 26.The MaineDOT is responsible for determining the eligibility of and certifying DBE firms in Maine.

A DBE is defined as a for-profit business that is owned and controlled by one or more socially and economically disadvantaged person(s). For the purpose of this definition:

1. "Socially and economically disadvantaged person" means an individual who is a citizen or lawful permanent resident of the United States and who is Black, Hispanic, Native American, Asian, Female; or a member of another group or an individual found to be disadvantaged by the Small Business Administration pursuant to Section 3 of the Small Business Act.
2. "Owned and controlled" means a business which is:
   a. A sole proprietorship legitimately owned and controlled by an individual who is a disadvantaged person.
   b. A partnership or limited liability company in which at least 51% of the beneficial ownership interests legitimately are held by a disadvantaged person(s).
   c. A corporation or other entity in which at least 51% of the voting interest and 51% of the beneficial ownership interests legitimately are held by a disadvantaged person(s).

The disadvantaged group owner(s) or stockholder(s) must possess control over management, interest in capital, and interest in earnings commensurate with the percentage of ownership. If the disadvantaged group ownership interests are real, substantial and continuing and not created solely to meet the requirements of this program, a firm is considered a bona fide DBE.

105.10.1.2 Commercially Useful Function MaineDOT will count expenditures of a DBE contractor toward DBE goals only if the DBE is performing a commercially useful function on that contract. A DBE performs a commercially useful function when it is responsible for execution of the work of the contract and is carrying out its responsibilities by actually performing, managing, and supervising the work involved. Credit will only be given when the DBE meets all conditions for a CUF. Credit for labor will be in accordance with the responsibilities outlined in the contract. To perform a commercially useful function, the DBE must also be responsible, with respect to materials and supplies used on the Contract, for negotiating price, determining quality and quantity, ordering the materials, and installing (where applicable) and paying for the material itself. To determine whether a DBE is performing a commercially useful function, MaineDOT will evaluate the amount of work subcontracted, industry practices, whether the amount the firm is to be paid under the Contract is commensurate with the work it is actually performing and DBE credit claimed for its performance of the work, and other relevant factors.

Rented equipment used by the DBE must not be rented from the Prime Contractor on a job that the DBE is subcontracted with that Prime Contractor for regular course of business.

A current listing of certified DBEs that may wish to participate in the highway construction program and the scope of work for which they are certified can be found at http://www.maine.gov/mdot/disadvantaged-business-enterprises/pdf/directory.pdf. Credit will be given for the value described by a DBE performing as:

A. A prime contractor; 100% of actual value of work performed by own workforces.
B. An approved subcontractor; 100% of work performed by own workforces.
C. An owner-operator of construction equipment; 100% of expenditures committed.
D. A manufacturer; 100% of expenditures committed. The manufacturer must be a firm that operates or maintains a factory or establishment that produces on the premises the materials or supplies obtained by the Contractor. Brokers and packagers shall not be regarded as manufacturers.
E. A regular dealer; 60% of expenditures committed. A regular dealer is defined as a firm that owns, operates, or maintains a store, warehouse or other establishment in which the materials or supplies required for the performance of the contract are bought, kept in stock, and regularly sold to the public. For purposes of this provision a "Broker" is a DBE that has entered into a legally binding relationship to provide goods or services delivered or performed by a third party. Brokers and packagers shall not be regarded as regular dealers.
F. A bona fide service provider; 100% of reasonable fees or commissions. Eligible services include professional, technical, consultant, or managerial, services and assistance in the procurement of essential personnel, facilities, equipment, materials or supplies required for the performance of the contract. Eligible services also include agencies providing bonding and insurance specifically required for the performance of the contract.
G. A trucking, hauling or delivery operation. 100% of expenditures committed when trucks are owned, operated, licensed and insured by the DBE and used on the contract and, if applicable, includes the cost of the self supplied materials and supplies.100% of expenditures committed when the DBE leases trucks from another DBE firm including an owner-operator. 100% of reasonable fees or commissions the DBE receives as a result of a lease arrangement for trucks from a non-DBE, including an owner-operator.
H. Any combination of the above.

105.10.1.3 Race-neutral Goals The Maine DOT is required to set an annual goal (approved on a three year basis) for DBE participation in Federal-aid projects. In order to fulfill that goal, bidders are encouraged to utilize DBE businesses certified by the MaineDOT. MaineDOT seeks to meet the established DBE goal solely through race-neutral means. *Race-neutral* DBE participation occurs when a DBE is awarded a prime contract through customary competitive procurement procedures, is awarded a subcontract on a contract that does not carry a DBE contract goal, or wins a subcontract from a prime contractor that did not consider its DBE status in making the award. A DBE/subcontractor Utilization Proposed Form is required to be included in bid documents.

MaineDOT will analyze each project and create a Project Availability Target (PAT), based on a number of factors including project scope, available DBE firms, firms certified in particular project work, etc. Each bid will request that the contractor attempt to meet the PAT. This PAT is developed to assist contractors to better understand what the MaineDOT expectations are for a

specific project. The PAT is NOT a mandate but an assessment of what this particular project can bear for DBE participation. The Department anticipates that each contractor will make the best effort to reach or exceed this PAT for the project.

105.10.1.4 Race-conscious Project Goals If it is determined by the Department that the annual DBE goal will not be met through *race-neutral* means, the Department may implement *race-conscious contract goals* on some projects. Race-conscious contract goals are goals that are enforceable by the Department and require that the prime contractor use good faith effort to achieve the goal set by the Department for that particular project. If race conscious means are implemented on a project, the Prime must comply with the requirements of 49 CFR.

At the time of the bid opening, all Bidders shall submit with their bid a Disadvantaged Business Enterprise (DBE) Commitment Form provided by the Department. This form will list the DBE and non-DBE firms that are proposed to be used during the execution of the Work. The list shall show the name of the firm, the item/material/type of work involved and the dollar amount of work to be performed. The dollar total of each commitment shall be totaled and a percentage determined.

If the project goal is not met, acceptable documentation showing all good faith efforts made to obtain participation may be required in order to award the project. Failure to provide the required listing with the dollar participation total or acceptable documentation of good faith efforts to obtain DBE participation within 3 days after the bid opening date will be considered a lack of responsiveness on the part of the low bidder. Rejection of the low bid under these circumstances will require the low bidder to surrender the Proposal Guaranty to the Department. The submission and approval of the above forms does not constitute a formal subcontract.

If for any reason during the progress of the Work the Contractor finds that DBEs included on the list are unable to perform the proposed work, the Contractor, with written release by the committed DBE or approval of the Department, may substitute other DBE firms for those named on the list. If the Contractor is able to clearly document their inability to find qualified substitute firms to meet the project goal, the Contractor may request in writing approval to substitute the DBE with a non-DBE firm. If at any time during the life of the Contract it is determined that the Contractor is not fulfilling the goal or commitment(s) and is not making a good faith effort to fulfill the DBE requirement, the Department may withhold progress payments. If good faith effort is determined by the Department, failure to meet the DBE contract goal will not be a detriment to the bid award. Fulfillment of the goal percentage shall be determined by dividing the dollars committed to the DBEs by the actual contract dollars. These requirements are in addition to all other Equal Employment Opportunity requirements on Federal-aid contracts.

105.10.1.5 Certification of DBE attainment on Contracts The MaineDOT must certify that it has conducted post-award monitoring of all contracts to ensure that DBEs had done the work for which credit was claimed. The certification is for the purpose of ensuring accountability for monitoring which the regulation already requires. The MaineDOT will certify these contracts through review of CUF forms, Elations sub-contract payment tracking as well as occasional on-site reviews of projects and through the project's final closeout documentation provided by our Contracts Section.

105.10.1.6 Bidders' List Survey Pursuant to 49 CFR 26.11 the MaineDOT is required to "create and maintain" a bidders list and gather bidder information on our construction/consultant projects, Contractors will maintain information on all subcontract bids submitted by DBE and Non-DBE firms and provide that information to the Department. The Following information is required:

Firm Name
Firm Address
Firm status (DBE or non-DBE)
Age of firm (years)
And the annual gross receipts amount as indicated by defined brackets, i.e. $500,000 to $800,000, rather than requesting exact figures.

Not only is this information critical in determining the availability of DBE businesses relative to other businesses that do similar work, but the Federal Highway Administration requires that we obtain this information.

Town: Westbrook
WIN #: 19282.00
Date: 9/23/14

SPECIAL PROVISION
SECTION 105
General Scope of Work
(Environmental Requirements)

In-Water work consists of any activity conducted below the normal high water mark of a river, steam, brook, lake, pond or "Coastal Wetland" areas that are subject to tidal action during the highest tide level for the year which an activity is proposed as identified in the tide tables published by the National Ocean Service. http://www.oceanservice.noaa.gov/ For the full definition of "Coastal Wetlands", please refer to 38 MRSA 480-B(2)

I. **In-Water work is allowed from July 1 to March 31. No cofferdam installation, cofferdam removal, or pile driving shall occur in the water between April 1 and June 30.**

II. In-Water work window applies to the following water bodies at the following station #'s:

1. Presumpscot River at proposed bridge replacement

III. Special Conditions:

1. Special Conditions of Army Corps of Engineers (ACOE) Category II permit apply (see permit and conditions in contract documents).
2. Conditions of DEP Permit-By-Rule Section 11 apply (see permit and conditions in contract documents).
3. Conditions of DEP Individual Permit apply (see permit in contract documents).

IV. Approvals:

1. Temporary Soil Erosion and Water Pollution Control Plan
2. Permitted Resource Impacts (square feet), see ACOE permit for locations:
3. *Stream:*

Permanent: RUS-2,239
Temporary: RUS-500

V. All activities are <u>prohibited</u> (including placement and removal of cofferdams unless otherwise permitted by Regulatory Agencies) below the normal high water mark if outside the prescribed in-water work window, except for the following:

1. Work within a cofferdam constructed according to MaineDOT's Standard Specifications and in adherence with the contractors approved "Soil Erosion and Water Pollution Control Plan".

VI. No work is allowed that completely blocks a river, stream, or brook without providing downstream flow.

NOTE: Regulatory Review and Approval is required to modify the existing In-Water work window. Requests for work window extensions must be submitted to the MaineDOT Environmental Office. Approval of requests for work window extensions are not guaranteed and may result in delays in construction schedule that are the sole responsibility of the contractor.

SPECIAL PROVISION 105
OVERLIMIT PERMITS

Title 29-A § 2382 MRSA Overlimit Movement Permits.

1. Overlimit movement permits issued by State. The Secretary of State, acting under guidelines and advice of the Commissioner of Transportation, may grant permits to move nondivisible objects having a length, width, height or weight greater than specified in this Title over a way or bridge maintained by the Department of Transportation

2. Permit fee. The Secretary of State, with the advice of the Commissioner of Transportation, may set the fee for single trip permits, at not less than $6, nor more than $30, based on weight, height, length and width. The Secretary of State may, by rule, implement fees that have been set by the Commissioner of Transportation for multiple trip, long-term overweight movement permits. Rules established pursuant to this section are routine technical rules pursuant to Title 5, chapter 375, subchapter II-A.

3. County and municipal permits. A county commissioner or municipal officer may grant a permit, for a reasonable fee, for travel over a way or bridge maintained by that county or municipality

4. Permits for weight. A vehicle granted a permit for excess weight must first be registered for the maximum gross vehicle weight allowed for that vehicle.

5. Special mobile equipment. The Secretary of State may grant a permit, for no more than one year, to move pneumatic-tire equipment under its own power, including Class A and Class B special mobile equipment, over ways and bridges maintained by the Department of Transportation. The fee for that permit is $15 for each 30-day period.

6. Scope of permit. A permit is limited to the particular vehicle or object to be moved, the trailer or semitrailer hauling the overlimit object and particular ways and bridges.

7. Construction permits. A permit for a stated period of time may be issued for loads and equipment employed on public way construction projects, United States Government projects or construction of private ways, when within construction areas established by the Department of Transportation. The permit:

A. Must be procured from the municipal officers for a construction area within that municipality;

B. May require the contractor to be responsible for damage to ways used in the construction areas and may provide for:

(1) Withholding by the agency contracting the work of final payment under contract; or

(2) The furnishing of a bond by the contractor to guarantee suitable repair or payment of damages.

The suitability of repairs or the amount of damage is to be determined by the Department of Transportation on state-maintained ways and bridges, otherwise by the municipal officers;

C. May be granted by the Department of Transportation or by the state engineer in charge of the construction contract; and

D. For construction areas, carries no fee and does not come within the scope of this section.

8. Gross vehicle weight permits. The following may grant permits to operate a vehicle having a gross vehicle weight exceeding the prescribed limit:

A. The Secretary of State, with the consent of the Department of Transportation, for state and state aid highways and bridges within city or compact village limits;

B. Municipal officers, for all other ways and bridges within that city and compact village limits; and

C. The county commissioners, for county roads and bridges located in unorganized territory.

9. Pilot vehicles. The following restrictions apply to pilot vehicles.

A. Pilot vehicles required by a permit must be equipped with warning lights and signs as required by the Secretary of State with the advice of the Department of Transportation.

B. Warning lights may be operated and lettering on the signs may be visible on a pilot vehicle only while it is escorting a vehicle with a permit on a public way.

With the advice of the Commissioner of Transportation and the Chief of the State Police, the Secretary of State shall establish rules for the operation of pilot vehicles.

9-A. Police escort. A person may not operate a single vehicle or a combination of vehicles of 125 feet or more in length or 16 feet or more in width on a public way unless the vehicle or combination of vehicles is accompanied by a police escort. The Secretary of State, with the advice of the Commissioner of Transportation, may require a police escort for vehicles of lesser dimensions.

A. The Bureau of State Police shall establish a fee for state police escorts to defray the costs of providing a police escort. A county sheriff or municipal police department may establish a fee to defray the costs of providing police escorts.

B. The Bureau of State Police shall provide a police escort if a request is made by a permittee. A county sheriff or municipal police department may refuse a permittee's request for a police escort.

C. A vehicle or combination of vehicles for which a police escort is required must be accompanied by a state police escort when operating on the interstate highway system.

10. Taxes paid. A permit for a mobile home may not be granted unless the applicant provides reasonable assurance that all property taxes, sewage disposal charges and drain and sewer assessments applicable to the mobile home, including those for the current tax year, have been paid or that the mobile home is exempt from those taxes. A municipality may waive the requirement that those taxes be paid before the issuance of a permit if the mobile home is to be moved from one location in the municipality to another location in the same municipality for purposes not related to the sale of the mobile home.

11. Violation. A person who moves an object over the public way in violation of this section commits a traffic infraction.

Section History:
PL 1993, Ch. 683, §A2 (NEW).
PL 1993, Ch. 683, §B5 (AFF).
PL 1997, Ch. 144, §1,2 (AMD).
PL 1999, Ch. 117, §2 (AMD).
PL 1999, Ch. 125, §1 (AMD).
PL 1999, Ch. 580, §13 (AMD).
PL 2001, Ch. 671, §30 (AMD).
PL 2003, Ch. 166, §13 (AMD).
PL 2003, Ch. 452, §Q73,74 (AMD).
PL 2003, Ch. 452, §X2 (AFF).

SPECIAL PROVISION 105
CONSTRUCTION AREA

A Construction Area located in the **City of Westbrook** has been established by the Maine Department of Transportation (MDOT) in accordance with provisions of 29-A § 2382 Maine Revised Statutes Annotated (MRSA).

(a) The section of highway under construction in the city of Westbrook, Cumberland County on Main Street and Bridge Street over the Presumpscot River.

(b) (Main Street) station 20+25.00 to station 27+75.00 of the construction plus approaches.

(c) (Bridge Street) over the Presumpscot River station 10+00.10 to station 15+50.00 of the construction plus approaches.

Per 29-A § 2382 (7) MRSA, the MDOT may "*issue permits for stated periods of time for loads and equipment employed on public way construction projects, United States Government projects or construction of private ways, when within construction areas established by the Department of Transportation. The permit:*

A. Must be procured from the municipal officers for a construction area within that municipality;

B. May require the contractor to be responsible for damage to ways used in the construction areas and may provide for:

(1) Withholding by the agency contracting the work of final payment under contract; or

(2) The furnishing of a bond by the contractor to guarantee suitable repair or payment of damages.

The suitability of repairs or the amount of damage is to be determined by the Department of Transportation on state-maintained ways and bridges, otherwise by the municipal officers;

C. May be granted by the Department of Transportation or by the state engineer in charge of the construction contract; and

D. For construction areas, carries no fee and does not come within the scope of this section."

The Municipal Officers for the **City of Westbrook** agreed that an Overlimit Permit will be issued to the Contractor for the purpose of using loads and equipment on municipal ways in excess of the limits as specified in 29-A MRSA, on the municipal ways as described in the "Construction Area".

As noted above, a bond may be required by the municipality, the exact amount of said bond to be determined prior to use of any municipal way. The MDOT will assist in determining the bond amount if requested by the municipality.

The maximum speed limits for trucks on any town way will be 25 mph (40 km per hour) unless a higher legal limit is specifically agreed upon in writing by the Municipal Officers concerned.

SPECIAL PROVISION
SECTION 106
QUALITY
(Quality Level Analysis- Structural Concrete)

106.7.1 Standard Deviation Method Under H. Replace the Method A payfactor with the following;

"Method A: PF = [32.5 + (Quality Level * 0.75)] * 0.01"

Westbrook
Bridge Street Bridge
WIN: 019282.00
September 4, 2014

SPECIAL PROVISION
SECTION 107
PROSECUTION AND PROGRESS
(Contract Time)

The specified contract completion date is June 30, 2017.

SPECIAL PROVISION
SECTION 107
TIME
(Supplemental Liquidated Damages)

The new bridge shall be open to unrestricted traffic by June 30, 2016. Open to unrestricted traffic is defined as having membrane, base and surface lifts of pavement, bridge rail, with the approaches having base and surface pavement and approach guardrail or temporary concrete barrier. Provisions shall also be made for temporary pedestrian access across the proposed bridge as shown in the Plans.

The Contractor will be assessed Supplemental Liquidated Damages at the rate of five hundred dollars ($500) per Day for each Day that the new bridge is not open to unrestricted traffic after the June 30, 2016 deadline.

These assessments of supplemental liquidated damages will be in addition to the liquidated damages specified in Section 107 of the Standard Specifications.

Once the Contractor commences work on this project the work shall be continuous through completion unless the work stoppage is allowed by the Resident.

SPECIAL PROVISION
SECTION 107
TIME
(Open to Traffic)
(Limitation of Operations, & Supplemental Liquidated Damages)

The Contractor may close the Bridge Street Spur to traffic except during the hours of 6:30 AM to 8:30 AM and 3:00 PM to 6:30 PM and shall meet the guidelines specified in Special Provision 652, Maintenance of Traffic.

The Contractor may also close a single lane on existing Bridge Street in the area north of the existing bridge between station 14+00 to 16+00, while maintaining a minimum of 1 (one) lane of alternating two-way traffic with flaggers, except during the hours of 6:30 AM to 8:30 AM and 3:00 PM to 6:30 PM and shall meet the guidelines specified in Special Provision 652, Maintenance of Traffic. This single lane closure may be for a maximum contiguous length of 200 (two hundred) feet. If northbound traffic queues back into the Main Street intersection then the lane closure shall be reopened at the direction of the Resident.

Lane closures on Main Street are not permissible at any time without the prior approval of the Resident.

Supplemental liquidated damages will be assessed to the Contractor at the rate of two Hundred fifty Dollars ($250.00) per every 15 minutes that the Bridge Street Spur is closed and/or Bridge Street is not open to two-way traffic outside the times allowed, as described above. The $250.00 fee shall be assessed starting one minute beyond the allowed times above and added cumulatively every 15 minutes thereafter, with a maximum penalty of two thousand dollars ($2,000.00) per Day.

The Contractor shall notify the Resident a minimum of five (5) Days in advance of all Bridge Street lane and Bridge Street Spur closures. Closures are subject to the approval of the Resident.

Assessment of supplemental liquidated damages will be in addition to liquidated damages specified in Section 107 of the Standard Specifications.

SPECIAL PROVISION
SECTION 107
TIME
(Supplemental Liquidated Damages for Fabrication Time)

Append Section 107.8 with the following:

107.8.1 Fabrication Time

The Department has budgeted for the following amounts of continuous fabrication/shop inspection for certain Work components:

Element	Time	Supplemental LD
1) Composite Beams	60 calendar days	$650 per calendar day
2) Steel Pedestrian Bridge	28 calendar days	$650 per calendar day

The Contractor is responsible for requiring their fabricators, manufacturers, and/or suppliers to produce these products for the Work continuously until finished, including any needed actions to correct unacceptable workmanship or materials. If the Department determines that shop inspection beyond these times is required, then the corresponding Supplemental Liquidated Damages will be deducted as they occur from amounts otherwise due the Contractor. The Contractor will be notified by the Department when these times begin and when the allotted time will expire.

If a fabricator or supplier works more than one shift per day and the Department determines that inspection is required for each shift, each shift will count as a calendar day and the LD rate will be the noted amount per shift per calendar day in lieu of per calendar day.

SPECIAL PROVISION
SECTION 107
TIME

107.4.2 Schedule of Work Required. This Section is amended by the following:

In addition to the Contractors initial CPM Schedule, the Department will require the Contractor to update the schedule monthly to show current progress. The submittal date for monthly updates shall be determined by the Resident.

SPECIAL PROVISION
SECTION 107
SCHEDULING OF WORK

Replace Section 107.4.2 with the following:

"107.4.2 Schedule of Work Required Within 21 Days of Contract Execution and before beginning any on-site activities, the Contractor shall provide the Department with its Schedule of Work. The Contractor shall plan the Work, including the activity of Subcontractors, vendors, and suppliers, such that all Work will be performed in Substantial Conformity with its Schedule of Work. The Schedule must include sufficient time for the Department to perform its functions as indicated in this Contract, including QA inspection and testing, approval of the Contractor's TCP, SEWPCP and QCP, and review of Working Drawings.

At a minimum, the Schedule of Work shall include a bar chart which shows the major Work activities, milestones, durations, **submittals and approvals**, and a timeline. Milestones to be included in the schedule include: (A) start of Work, (B) beginning and ending of planned Work suspensions, (C) Completion of Physical Work, and (D) Completion. If the Contractor Plans to Complete the Work before the specified Completion date, the Schedule shall so indicate.

Any restrictions that affect the Schedule of Work such as paving restrictions or In-Stream Work windows must be charted with the related activities to demonstrate that the Schedule of Work complies with the Contract.

The Department will review the Schedule of Work and provide comments to the Contractor within 20 days of receipt of the schedule. The Contractor will make the requested changes to the schedule and issue the finalized version to the Department."

SPECIAL PROVISION
SECTION 107
TIME
(Scheduling of Work – Projected Payment Schedule)

Description The Contractor shall also provide the Department with a Quarterly Projected Payment Schedule that estimates the value of the Work as scheduled, including requests for payment of Delivered Materials. The Projected Payment Schedule must be in accordance with the Contractor's Schedule of Work and prices submitted by the Contractor's Bid. The Contractor shall submit the Projected Payment Schedule as a condition of Award.

SPECIAL PROVISION
SECTION 108
PAYMENT
(Asphalt Escalator)

108.4.1 Price Adjustment for Hot Mix Asphalt: For all contracts with hot mix asphalt in excess of 500 tons total, a price adjustment for performance graded binder will be made for the following pay items:

Item 403.102 Mot Mix Asphalt – Special Areas
Item 403.206 Hot Mix Asphalt - 25 mm
Item 403.207 Hot Mix Asphalt - 19 mm
Item 403.2071 Hot Mix Asphalt - 19 mm (Polymer Modified)
Item 403.2072 Hot Mix Asphalt - 19 mm (Asphalt Rich Base)
Item 403.2073 Warm Mix Asphalt - 19 mm
Item 403.208 Hot Mix Asphalt - 12.5 mm
Item 403.2081 Hot Mix Asphalt - 12.5 mm (Polymer Modified)
Item 403.20813 Warm Mix Asphalt - 12.5 mm (Polymer Modified)
Item 403.2083 Warm Mix Asphalt - 12.5 mm
Item 403.209 Hot Mix Asphalt - 9.5 mm (sidewalks, drives, & incidentals)
Item 403.210 Hot Mix Asphalt - 9.5 mm
Item 403.2101 Hot Mix Asphalt - 9.5 mm (Polymer Modified)
Item 403.2102 Hot Mix Asphalt - 9.5 mm (Asphalt Rich Base)
Item 403.2103 Warm Mix Asphalt - 9.5 mm
Item 403.2104 Hot Mix Asphalt - 9.5 mm (3/4" Surface)
Item 403.211 Hot Mix Asphalt – Shim
Item 403.2111 Hot Mix Asphalt – Shim (Polymer Modified)
Item 403.2113 Warm Mix Asphalt - Shim
Item 403.212 Hot Mix Asphalt - 4.75 mm (Shim)
Item 403.2123 Warm Mix Asphalt - 4.75 mm (Shim)
Item 403.213 Hot Mix Asphalt - 12.5 mm (base and intermediate course)
Item 403.2131 Hot Mix Asphalt - 12.5 mm (base and intermediate course Polymer Modified)
Item 403.2132 Hot Mix Asphalt - 12.5 mm (Asphalt Rich Base and intermediate course)
Item 403.2133 Warm Mix Asphalt - 12.5 mm (base and intermediate course)
Item 403.214 Hot Mix Asphalt - 4.75 mm (Surface)
Item 403.2143 Warm Mix Asphalt - 4.75 mm (Surface)
Item 403.301 Hot Mix Asphalt (Asphalt Rubber Gap-Graded)
Item 404.70 Colored Hot Mix Asphalt – 9.5mm (Surface)
Item 404.72 Colored Hot Mix Asphalt – 9.5mm (Islands, sidewalks, & incidentals)
Item 461.13 Maintenance Surface Treatment

Price adjustments will be based on the variance in costs for the performance graded binder component of hot mix asphalt. They will be determined as follows:

The quantity of hot mix asphalt for each pay item will be multiplied by the performance graded binder percentages given in the table below times the difference in price between the base price and the period price of asphalt cement. Adjustments will be made upward or downward, as prices increase or decrease.

Item 403.102–6.2%			
Item 403.206–4.8%			
Item 403.207–5.2%	Item 403.2071–5.2%	Item 403.2072–5.8%	Item 403.2073–5.2%
Item 403.208–5.6%	Item 403.2081–5.6%	Item 403.20813–5.6%	Item 403.2083–5.6%
Item 403.209–6.2%			
Item 403.210–6.2%	Item 403.2101–6.2%	Item 403.2102–6.8%	Item 403.2103–6.2%
Item 403.2104–6.2%			
Item 403.211–6.2%	Item 403.2111–6.2%		Item 403.2113–6.2%
Item 403.212–6.8%			Item 403.2123–6.8%
Item 403.213–5.6%	Item 403.2131–5.6%	Item 403.2132–6.2%	Item 403.2133–5.6%
Item 403.214–6.8%			Item 403.2143–6.8%
Item 403.301–6.2%			
Item 404.70–6.2%			
Item 404.72–6.2%			
Item 461.13–6.4%			

Hot Mix Asphalt**:** The quantity of hot mix asphalt will be determined from the quantity shown on the progress estimate for each pay period.

Base Price: The base price of performance graded binder to be used is the price per standard ton current with the bid opening date. This price is determined by using the average New England Selling Price (Excluding the Connecticut market area), as listed in the Asphalt Weekly Monitor.

Period Price: The period price of performance graded binder will be determined by the Department by using the average New England Selling Price (Excluding the Connecticut market area), listed in the Asphalt Weekly Monitor current with the paving date. The maximum Period Price for paving after the adjusted Contract Completion Date will be the Period Price on the adjusted Contract Completion Date.

SPECIAL PROVISION
SECTION 109.5
ADJUSTMENTS FOR DELAY
(Delays due to Flooding)

Subsection 109.5.1, Definitions- Types of Delays, is replaced with the following:

109.5.1 Definitions - Types of Delays Delays are defined as follows and may be divided into more than one type depending upon cause.

A. Excusable Delay Except as expressly provided otherwise by this Contract, an "Excusable Delay" is a Delay to the Critical Path that is directly and solely caused by: (1) an Uncontrollable Event, or (2) a flooding event at the effected location of the Project that results in a Q25 headwater elevation, or greater, but less than a Q50 headwater elevation. Theoretical headwater elevations will be determined by the Department; actual headwater elevations will be determined by the Contractor and verified by the Department.

B. Compensable Delay A "Compensable Delay" is a Delay to the Critical Path that is directly and solely caused by: (1) a weather related Uncontrollable Event of such an unusually severe nature that a Federal Emergency Disaster is declared. The Contractor will only be entitled to an Equitable Adjustment if the Project falls within the geographic boundaries prescribed under the disaster declaration (2) an Uncontrollable Event caused by a Utility Company or other third party (not Subcontractors) Working on Project-related Work within the Project Limits if, and only if, the Utility Company or such other third party offers the Department reimbursement for such Delay~~,~~ (3) acts by the Department that are in violation of applicable laws or the Contract, or (4) a flooding event at the effected location of the Project that results in a Q50 headwater elevation, or greater. Theoretical Q50 headwater elevations will be determined by the Department; actual headwater elevations will be determined by the Contractor and verified by the Department.

C. Inexcusable Delay "Inexcusable Delays" are all Delays that are not Excusable Delays or Compensable Delays.

For a related provision, see Section 101.2 - Definition of Uncontrollable Event.

SPECIAL PROVISION
SECTION 201
TREE GRATE
(Wrought Iron)

Description:

This work shall consist of furnishing and installing all materials and equipment necessary for the assembly, delivery and installation of the metal tree grates and frames, in accordance with these specifications, as shown on the plans, per manufacturer's recommendations and as directed by the Resident.

Tree Grates shall be Starburst-1 84-inch square Model 8402-1; Starburst -1 60-inch square Model 6018-1 and Starburst-2 48-inch by 72-inch Model 7222-2 with 18" tree opening as manufactured by Ironsmith, Inc. or approved equal.

Materials:

The installation, handling and storage of all material shall comply with manufacturer's instructions and recommendations.

A. Tree Grates

Tree grate material shall be cast gray iron from 100% recycled material. All tree grate castings shall be manufactured true to pattern and component parts, and shall fit together in a satisfactory manner. The castings shall be of uniform pattern and quality, free from blowholes, hard spots, shrinkage, distortion or other defects. Castings shall be cleaned by shot blasting.

B. Hardware

All bolts, nuts, washers and other associated hardware shall be Hot-dip galvanized in accordance with ASTM A153. Exposed fasteners shall be finished to match trees grate.

C. Finish

Grates are to be supplied painted with black polyurethane.

D. Frames

Matching steel angle frames shall be provided by tree grate manufacturer, model 8400F-CS-4 (84-inch square grate); 6000F-1 (60-inch square grate); and 48x72F-4 (48-inch by 72-inch grate) or approved equal shall be provided with installation detail(s) per plans and manufacturer's recommendations.

a. Frames to be Powder coat Black to match grates. Install with optional F. Pilfer proof Screws per manufacturer's standard.

E. Warrantee

Grates and frames shall be warranted by the manufacturer against defects in materials and workmanship for a minimum of five (5) years.

Submittals:

Contractor shall submit drawings of tree grates and frames including all product data, manufacturer's specifications, and installation instructions for all items furnished for review by City Landscape Architect prior to purchase and installation.

Method of Measurement:

The Tree Grate will be measured for payment by Each, complete and in place.

Basis of Payment:

The accepted Tree Grate will be paid for at the contract unit price Each. Payment will be full compensation for the furnishing of all materials, labor and incidentals required for all earthwork, foundations and erection of the Tree Grate, complete and in place.

Payment will be made under:

Pay Item	Pay Unit
201.3 Tree Grate	Each

SPECIAL PROVISION
SECTION 201
TREE GUARD
(Steel 60” ht. by 16” standard opening.)

Description:

This work shall consist of furnishing and installing all materials and equipment necessary for the assembly, delivery and installation of the metal tree guard, in accordance with these specifications, as shown on the plans, and as directed by the Resident.

Tree Guards shall be Style M-1 with 16” tree opening as manufactured by Ironsmith, Inc. or approved equal.

Materials:

The installation, handling and storage of all material shall comply with manufacturer’s instructions and recommendations.

A. Tree Guards

Tree guard material shall be jig welded from hot rolled steel, steel bar stock. All tree guards shall be manufactured true to pattern and component parts, and shall fit together in a satisfactory manner.

B. Hardware

All bolts, nuts, washers and other associated hardware shall be Hot-dip galvanized in accordance with ASTM A153. Exposed fasteners shall be finished to match tree guard.

C. Finish

Guards are to be supplied hot dipped galvanized with black powder coat standard finish.

D. Bar stock

Bar stock shall be ¼” x1” for vertical bar stock with rolled tops and ¼” x 2” horizontal bands as provided by tree guard manufacturer, model M-1 or approved equal shall be provided with installation detail(s) per plans and manufacturer’s recommendations.

E. Warrantee

Guards and hardware shall be warranted by the manufacturer against defects in materials and workmanship for a minimum of five (5) years.

Submittals:

Contractor shall submit drawings of tree guards including all product data, manufacturer's specifications, and installation instructions for all items furnished for review by City Landscape Architect prior to purchase and installation.

Method of Measurement:

The Tree Guards will be measured for payment by Each, complete and in place.

Basis of Payment:

The accepted Tree Guard will be paid for at the contract unit price Each. Payment will be full compensation for the furnishing of all materials, labor and incidentals required for all earthwork, foundations and erection of the Tree Guard, complete and in place.

Payment will be made under:

Pay Item	Pay Unit
201.31 Tree Guard	Each

Westbrook
Bridge Street Bridge
WIN: 019282.00
October 11, 2013

SPECIAL PROVISION
SECTION 202
REMOVING STRUCTURES AND OBSTRUCTIONS
(Removing of Concrete Sidewalk)

ADD the following to Subsection 202.08:

202.08 Basis of Payment

Removing of Concrete Sidewalk will be paid for at the contract unit price per square yard which price will be full compensation for removing and disposing of concrete and concrete reinforcement. Material for backfilling holes resulting from removal of obstructions will be measured and paid for as provided in Section 203 - Excavation and Embankments.

Payment will be made under:

Pay Item		Pay Unit
202.111	Removing of Concrete Sidewalk	Cubic Yard

Westbrook
Bridge Street Bridge
WIN: 019282.00
September 23, 2013

SPECIAL PROVISION
SECTION 202
REMOVING STRUCTURES AND OBSTRUCTIONS
(Remove and Relocate Bike Rack & Trash Receptacle)

Description This work shall consist of supplying all necessary equipment, labor and materials necessary to Remove and Relocate Bike Rack and Trash Receptacle on a new concrete foundation and remove the existing foundation as shown on the Plans.

Materials The slab shall be constructed to dimensions and at the proposed location shown on the Plans. The slab shall meet the requirements of Section 608 – Sidewalks, Reinforced Concrete Sidewalk unless otherwise noted on the Plans. Brick pavers will be removed and reset as shown on the Plans in accordance with Section 608 – Brick Sidewalk (Remove and Rebuild).

Construction Requirements The Contractor shall carefully remove and store the existing bike rack and trash receptacle from the existing foundation. Any damage to the existing structures, because of the Contractor's operations, or because of their failure to store and protect them in a manner that would prevent loss or damage, shall be repaired or replaced with items of equal quality, at the Contractor's expense.

The existing foundation shall become the property of the Contractor and shall be removed and disposed of at the Contractor's expense.

Method of Measurement Remove and Relocate Bike Rack and Trash Receptacle shall be paid for Lump Sum.

Basis of Payment The accepted quantity of Remove and Relocate Bike Rack and Trash Receptacle will be paid for at the contract unit price per lump sum, complete and accepted in place. The unit price shall be full compensation for all equipment, labor, and materials necessary to complete the work including subbase material.

Payment will be made under:

Pay Item		Pay Unit
202.2005	Remove and Relocate Bike Rack and Trash Receptacle	Lump Sum

Bridge Replacement
Westbrook, Maine
Project No. 19282.00
July 19, 2013

SPECIAL PROVISION
SECTION 203
EXCAVATION AND EMBANKMENT
(SOIL MANAGEMENT)

General. The work under this specification shall be performed in conformance with all the procedures and requirements described herein for the following activities: contaminated soil handling, reuse, temporary stockpiling, transportation, storage and disposal and, contaminated water handling, storage, treatment and disposal. This specification also addresses contaminated soil location, identification, and classification. The intent of this specification is to ensure that any contaminated soil and/or water encountered during construction will be managed in a manner that protects worker health and safety, public welfare and the environment.

Environmental Site Conditions. The Maine Department of Transportation's Environmental Office (MaineDOT's-ENV.) has conducted an assessment related to the Westbrook Bridge Street Replacement project. The Phase I Environmental Assessment for the project area was completed to obtain a general understanding of the environmental conditions along the project corridor. The Phase I Assessment included a review of relevant Maine Department of Environmental Protection's (MDEP's) and Environmental Protection Agency's (EPA's) databases and field reconnaissance of the project area. During the file review it was determined that the southern part of the project located in Saccarappa Park was designated as a Brownfields site by the MDEP. A review of the various reports indicated that the soils were impacted by heavy metals and polyaromatic hydrocarbons (PAHs). The results of these investigations are available for review from the Hydrogeologist at MaineDOT's Environmental Office in Augusta (207-624-3100).

Identified Area of Contamination. MaineDOT's-ENV investigation identified the Saccarappa Park Brownfields located on the southern end of the project as having shallow and deep soil contamination. For reference, this area is designated as "**Area A**". The location of **Area A** is defined as being on the southern side of the river in the area identified as Saccarappa Park roughly between MaineDOT stations 10+00 to 12+00 right and left of center. Laboratory results of samples taken from the borings associated with previous work by others on the site indicated concentrations of PAHs and metals associated with past industrial uses. These concentrations define the soils as potential special waste per State remedial guidelines.

Identifying and Screening Contaminated Soil and Groundwater. Within the contaminated section designated **Area A**, excavated soils will be considered contaminated and will need to be either reused on site or taken to a MDEP approved facility for proper management.

Handling and Disposition of Soil Materials. Within **Area A,** all soils excavated during construction shall be handled as follows:

- The soils shall not be excavated without prior approval by the Resident.

- The contractor shall make every attempt to reuse the soils onsite. The contractor can also bury any impacted soils on the Brownfield site property or behind both bridge abutments or place the impacted soils into landscape berms constructed on the Brownfield site property. If any of these options are chosen, the contractor is responsible for placing a cap on the material. This may include concrete, asphalt, or a marker layer and 12" of clean material.

- If soils cannot be reused on-site, the Contractor shall arrange and undertake disposal of all impacted soil at a landfill or treatment facility licensed to accept contaminated soil. The Contractor is responsible for all additional testing required by the receiving facility. Impacted soils that cannot be disposed of within 8 hours of excavation shall be stored in a Temporary Secured Stockpile area. If the Contractor proposes other disposal or treatment options, the Contractor is solely responsible for obtaining the associated permits and approvals from all relevant Municipal, State, and Federal agencies at no additional cost to the State.

The Resident is responsible for signing any manifests or bills of lading required to transport and disposal of the impacted soil. The Resident will send all manifests and bills of lading to MaineDOT, Environmental Office, Station 16, Augusta, Maine 04333.

Secured Stockpile Area - Materials.

A. Polyethylene. Polyethylene used for liner in the Secured Stockpile Area shall have a minimum of 20-mil thickness and shall meet the requirements of ASTM D3020.

B. Common Borrow. Fill used in the construction of the Temporary Secured Stockpile Area soil berm shall consist of Common Borrow and meet the requirements of Section 703.18

C. Concrete Barriers or Wooden Barricades. Concrete barriers or Wooden Barricades to form the sides of the Temporary Secured Stockpile Area shall meet the requirements of Section 526 or 652.05.

Health and Safety/Right-to-Know. Contractors and subcontractors are required to notify their workers of the history of the site and contamination that may be present and to be alert for evidence of contaminated soil and groundwater. The Contractor shall notify the Resident at least three business days prior to commencing any excavation in **Area A**.

The Contractor shall prepare a site specific Health and Safety Plan (HASP) for its workers and subcontractors who may work in the contaminated areas of the site. A Qualified Health and Safety Professional shall complete the HASP. The Qualified Health and Safety Professional will be an expert in field implementation of the following federal regulations:

29 CFR 1910.120 or 29 CFR 1926.65	Hazardous Waste Operations and Emergency Response
29 CFR 1910.134	Respiratory Protection
29 CFR 1926.650	Subpart D - Excavations
29 CFR 1926.651	General Requirements
29 CFR 1926.652	Requirements for Protective Systems

MaineDOT is voluntarily ameliorating the contamination in **Area A**. Given that this is a voluntary clean up effort approved by a regulatory agency, the OSHA requirements as defined in 29 CFR 1910.120 apply. These requirements mandate that workers and any subcontractors working in the contaminated area shall comply with all OSHA regulations for Hazardous Waste Operations and Emergency Response including a 40 hour initial hazardous waste operations certification [OSHA 1910.120(e)], annual 8 hour refresher course within the last 12 months and medical surveillance [OSHA 1910.120(f)] within the last 12 months.

The contractor shall designate a person to provide direct on-site supervision of the work in the contaminated areas. This person shall have the training under OSHA 1910.120 (e) as above and in addition be qualified as a construction Competent Person. It is the responsibility of the competent person to make those inspections necessary to identify situations that could result in hazardous conditions (e.g., possible cave-ins, indications of failure of protective systems, hazardous atmospheres, or other hazardous conditions), and then to insure that corrective measures are taken.

Submittals. The Contractor shall submit a site specific Health and Safety Plan (HASP) to the Resident at least two weeks in advance of any excavation work on the project. The Contractor shall not proceed with work until MaineDOT has reviewed the plan and notified the Contractor that it is acceptable.

Health and Safety Monitoring. Within the contaminated area of the project, the Contractor's designated on-site person shall monitor the work zone for those constituents specified in the Contractor's HASP. The Contractor shall provide all required health and safety monitoring equipment.

Dewatering. Groundwater may be encountered and its removal necessary to complete work within **Area A**. It will be treated as "contaminated" water. The Contractor shall inform the Resident before any dewatering commences. The "contaminated" water shall be pumped into a temporary holding tank(s). The Contractor will be responsible for the procurement of any holding tank(s). Any testing, treatment and/or disposal of the stored, contaminated water shall be undertaken by the Contractor in accordance with applicable Federal, State and local regulatory requirements.

On-Site Water Storage Tanks - Materials. If dewatering within the identified contaminated area becomes necessary the holding tanks used for temporary storage of contaminated water pumped from excavations shall be contamination free and have a minimum capacity of 2,000 gallons.

Dust Control. The Contractor shall employ dust control measures to minimize the creation of airborne dust during the construction process in the contaminated area. As a minimum, standard dust control techniques shall be employed where heavy equipment and the public will be traveling. These may include techniques such as watering-down the site or spreading hygroscopic salts.

Unanticipated Contamination. If the Contractor encounters previously undiscovered contamination or potentially hazardous conditions related to contamination, the Contractor shall immediately suspend work and secure the area. The Contractor will then notify the Resident immediately. These potentially hazardous conditions include, but are not limited to, buried containers, drums, tanks, "oil saturated soils", strong odors, or the presence of petroleum sufficient to cause a sheen on the groundwater. The area of potential hazard shall be secured to minimize health risks to workers and the public and to prevent a release of contaminants into the environment. The source of any suspected contamination shall be evaluated by the Resident (or MaineDOT's -ENV representative). As appropriate, the Resident will notify the MDEP's Response Services Unit in Portland and MaineDOT's Environmental Office. The Westbrook Fire Department must also be notified prior to removal of buried storage tanks and associated piping. The Contractor will evaluate the impact of the hazard on construction, amend the HASP if necessary, and with the Resident's approval, recommence work in accordance with the procedures of this Special Provision.

Method of Measurement. There will be no measurement for identification and environmental screening of contaminated soil material as all soil in **Area A** is considered contaminated.

Measurement for the development of a Health and Safety Plan (HASP) and providing health and safety equipment and personnel shall be by lump sum.

Measurement for the off-site treatment or disposal of impacted soil will be by the ton of Special Excavation.

There will be no measurement for construction of a Temporary Secured Stockpile Area. Construction of a Temporary Secured Stockpile Area, if necessary, is considered incidental to project construction. There will be no measurement for hauling impacted soil to the Temporary Secure Stockpile area or placement and removal of impacted soil in or out of the Temporary Secure Stockpile area. All hauling and any subsequent management/placement of contaminated soil is considered incidental to project construction.

There will be no measurement for additional laboratory testing of contaminated soil that is required by the landfill or treatment facility. Testing is incidental to the disposal of Special Excavation.

Measurement for the following items shall be according to Subsection 109:04 ("Change Order"/Force Account): any necessary contaminated water holding tank(s); and treatment or disposal of any contaminated groundwater.

Basis of Payment. There will be no payment for the identification and environmental screening of contaminated soil material as all soil in **Area A** is considered contaminated.

Payment for the development of a Health and Safety Plan (HASP) and providing health and safety equipment and personnel shall be by the lump sum

Payment for off site disposal or treatment of impacted soils at a MaineDEP licensed facility shall be by the ton of Special Excavation.

There will be no payment for the construction of the Temporary Secured Stockpile Area or hauling/management/placement of impacted soils to the Temporary Secured Stockpile Area. The Temporary Secured Stockpile Area shall be considered incidental to project construction.

Payment for the following items shall be according to Subsection 109:04 ("Change Order"/Force Account): any necessary contaminated water holding tank(s); and treatment or disposal of any contaminated groundwater.

Pay Item		Pay Unit
203.2312	Health and Safety Plan (HASP)	L.S.
203.2333	Disposal/Treatment of Special Excavation	Ton

STATE OF MAINE DEPARTMENT OF TRANSPORTATION	BRIDGE STREET WESTBROOK CUMBERLAND COUNTY	SHEET NUMBER 1 OF 1
19282.00	SPECIAL PROVISION 203 - AREA A	

SPECIAL PROVISION
SECTION 203
EXCAVATION AND EMBANKMENT
(Dredge Materials)

Description: Dredge Material (See MaineDOT Standard Specifications § 101.2) is regulated as a Special Waste.

Work associated with the Bridge Street Bridge Replacement initiative will require the excavation of select Dredge Material. In accordance with Maine Department of Environmental Protection Regulations in CMR 418, 100 cubic yards or less of Dredge Material Beneficially Used in the area adjacent to and draining into the dredged water body is exempt from Regulation. It is anticipated that less than 100-cubic yards of Dredge Material will be excavated for this project. There is onsite Beneficial Use for all of the Dredge Materials.

It is acknowledged that the excavation of Dredge for this work may include some boulders. The Maine Department of Environmental Protection has determined that sound boulders (rock 12-inches or more in diameter), that are free of adhering sediment or other contaminants, shall be deemed to be Inert Fill material and shall not be included in the Dredge Material Quantities.

Additionally, the Maine Department of Environmental Protection has determined that bedrock material blasted from the streambed for this project is not defined as dredge. This material can be moved off site and managed as inert fill.

The contractor shall Beneficially Use all Dredge Material excavated at the Bridge Street Bridge Replacement project in an area adjacent to and draining into the dredged water body. No more than 100-cubic yards of Dredge Material may be excavated.

CONSTRUCTION REQUIREMENTS

Management: The contractor shall Beneficially Use all Dredge Material excavated at the Bridge Street Bridge Replacement project in areas adjacent to and draining into the dredged water body. No more than 100-cubic yards of Dredge Material may be excavated.

Method of Measurement: Dredge Material will be measured by the cubic yard of material removed.

Basis of Payment: Payment for the Beneficial Use of Dredge Material will be incidental to the Contract Pay Items.

Payment shall be full compensation for excavation, dewatering, managing, transporting, and placement of the Dredge Materials.

Bridge Replacement
Westbrook, Maine
Project No. 19282.00
July 19, 2013

SPECIAL PROVISION
SECTION 203
EXCAVATION AND EMBANKMENT
(SOIL MANAGEMENT)

General. The work under this specification shall be performed in conformance with all the procedures and requirements described herein for the following activities: contaminated soil handling, reuse, temporary stockpiling, transportation, storage and disposal and, contaminated water handling, storage, treatment and disposal. This specification also addresses contaminated soil location, identification, and classification. The intent of this specification is to ensure that any contaminated soil and/or water encountered during construction will be managed in a manner that protects worker health and safety, public welfare and the environment.

Environmental Site Conditions. The Maine Department of Transportation's Environmental Office (MaineDOT's-ENV.) has conducted an assessment related to the Westbrook Bridge Street Replacement project. The Phase I Environmental Assessment for the project area was completed to obtain a general understanding of the environmental conditions along the project corridor. The Phase I Assessment included a review of relevant Maine Department of Environmental Protection's (MDEP's) and Environmental Protection Agency's (EPA's) databases and field reconnaissance of the project area. During the file review it was determined that the southern part of the project located in Saccarappa Park was designated as a Brownfields site by the MDEP. A review of the various reports indicated that the soils were impacted by heavy metals and polyaromatic hydrocarbons (PAHs). The results of these investigations are available for review from the Hydrogeologist at MaineDOT's Environmental Office in Augusta (207-624-3100).

Identified Area of Contamination. MaineDOT's-ENV investigation identified the Saccarappa Park Brownfields located on the southern end of the project as having shallow and deep soil contamination. For reference, this area is designated as "**Area A".** The location of **Area A** is defined as being on the southern side of the river in the area identified as Saccarappa Park roughly between MaineDOT stations 10+00 to 12+50 right and left of center. Laboratory results of samples taken from the borings associated with previous work by others on the site indicated concentrations of PAHs and metals associated with past industrial uses. These concentrations define the soils as potential special waste per State remedial guidelines.

Identifying and Screening Contaminated Soil and Groundwater. Within the contaminated section designated **Area A**, excavated soils will be considered contaminated and will need to be either reused on site or taken to a MDEP approved facility for proper management.

Handling and Disposition of Soil Materials. Within **Area A,** all soils excavated during construction shall be handled as follows:

- The soils shall not be excavated without prior approval by the Resident.

- The contractor shall make every attempt to reuse the soils onsite. The contractor can also bury any impacted soils on the Brownfield site property or behind both bridge abutments or place the impacted soils into landscape berms constructed on the Brownfield site property. If any of these options are chosen, the contractor is responsible for placing a cap on the material. This may include concrete, asphalt, or a marker layer and 12" of clean material.

- If soils cannot be reused on-site, the Contractor shall arrange and undertake disposal of all impacted soil at a landfill or treatment facility licensed to accept contaminated soil. The Contractor is responsible for all additional testing required by the receiving facility. Impacted soils that cannot be disposed of within 8 hours of excavation shall be stored in a Temporary Secured Stockpile area. If the Contractor proposes other disposal or treatment options, the Contractor is solely responsible for obtaining the associated permits and approvals from all relevant Municipal, State, and Federal agencies at no additional cost to the State.

The Resident is responsible for signing any manifests or bills of lading required to transport and disposal of the impacted soil. The Resident will send all manifests and bills of lading to MaineDOT, Environmental Office, Station 16, Augusta, Maine 04333.

Secured Stockpile Area - Materials.

A. Polyethylene. Polyethylene used for liner in the Secured Stockpile Area shall have a minimum of 20-mil thickness and shall meet the requirements of ASTM D3020.

B. Common Borrow. Fill used in the construction of the Temporary Secured Stockpile Area soil berm shall consist of Common Borrow and meet the requirements of Section 703.18

C. Concrete Barriers or Wooden Barricades. Concrete barriers or Wooden Barricades to form the sides of the Temporary Secured Stockpile Area shall meet the requirements of Section 526 or 652.05.

Health and Safety/Right-to-Know. Contractors and subcontractors are required to notify their workers of the history of the site and contamination that may be present and to be alert for evidence of contaminated soil and groundwater. The Contractor shall notify the Resident at least three business days prior to commencing any excavation in **Area A**.

The Contractor shall prepare a site specific Health and Safety Plan (HASP) for its workers and subcontractors who may work in the contaminated areas of the site. A Qualified Health and Safety Professional shall complete the HASP. The Qualified Health and Safety Professional will be an expert in field implementation of the following federal regulations:

29 CFR 1910.120 or 29 CFR 1926.65	Hazardous Waste Operations and Emergency Response
29 CFR 1910.134	Respiratory Protection
29 CFR 1926.650	Subpart D - Excavations
29 CFR 1926.651	General Requirements
29 CFR 1926.652	Requirements for Protective Systems

MaineDOT is voluntarily ameliorating the contamination in **Area A**. Given that this is a voluntary clean up effort approved by a regulatory agency, the OSHA requirements as defined in 29 CFR 1910.120 apply. These requirements mandate that workers and any subcontractors working in the contaminated area shall comply with all OSHA regulations for Hazardous Waste Operations and Emergency Response including a 40 hour initial hazardous waste operations certification [OSHA 1910.120(e)], annual 8 hour refresher course within the last 12 months and medical surveillance [OSHA 1910.120(f)] within the last 12 months.

The contractor shall designate a person to provide direct on-site supervision of the work in the contaminated areas. This person shall have the training under OSHA 1910.120 (e) as above and in addition be qualified as a construction Competent Person. It is the responsibility of the competent person to make those inspections necessary to identify situations that could result in hazardous conditions (e.g., possible cave-ins, indications of failure of protective systems, hazardous atmospheres, or other hazardous conditions), and then to insure that corrective measures are taken.

Submittals. The Contractor shall submit a site specific Health and Safety Plan (HASP) to the Resident at least two weeks in advance of any excavation work on the project. The Contractor shall not proceed with work until MaineDOT has reviewed the plan and notified the Contractor that it is acceptable.

Health and Safety Monitoring. Within the contaminated area of the project, the Contractor's designated on-site person shall monitor the work zone for those constituents specified in the Contractor's HASP. The Contractor shall provide all required health and safety monitoring equipment.

Dewatering. Groundwater may be encountered and its removal necessary to complete work within **Area A**. It will be treated as "contaminated" water. The Contractor shall inform the Resident before any dewatering commences. The "contaminated" water shall be pumped into a temporary holding tank(s). The Contractor will be responsible for the procurement of any holding tank(s). Any testing, treatment and/or disposal of the stored, contaminated water shall be undertaken by the Contractor in accordance with applicable Federal, State and local regulatory requirements.

On-Site Water Storage Tanks - Materials. If dewatering within the identified contaminated area becomes necessary the holding tanks used for temporary storage of contaminated water pumped from excavations shall be contamination free and have a minimum capacity of 2,000 gallons.

Dust Control. The Contractor shall employ dust control measures to minimize the creation of airborne dust during the construction process in the contaminated area. As a minimum, standard dust control techniques shall be employed where heavy equipment and the public will be traveling. These may include techniques such as watering-down the site or spreading hygroscopic salts.

Unanticipated Contamination. If the Contractor encounters previously undiscovered contamination or potentially hazardous conditions related to contamination, the Contractor shall immediately suspend work and secure the area. The Contractor will then notify the Resident immediately. These potentially hazardous conditions include, but are not limited to, buried containers, drums, tanks, "oil saturated soils", strong odors, or the presence of petroleum sufficient to cause a sheen on the groundwater. The area of potential hazard shall be secured to minimize health risks to workers and the public and to prevent a release of contaminants into the environment. The source of any suspected contamination shall be evaluated by the Resident (or MaineDOT's -ENV representative). As appropriate, the Resident will notify the MDEP's Response Services Unit in Portland and MaineDOT's Environmental Office. The Westbrook Fire Department must also be notified prior to removal of buried storage tanks and associated piping. The Contractor will evaluate the impact of the hazard on construction, amend the HASP if necessary, and with the Resident's approval, recommence work in accordance with the procedures of this Special Provision.

Method of Measurement. There will be no measurement for identification and environmental screening of contaminated soil material as all soil in **Area A** is considered contaminated.

Measurement for the development of a Health and Safety Plan (HASP) and providing health and safety equipment and personnel shall be by lump sum.

Measurement for the off-site treatment or disposal of impacted soil will be by the ton of Special Excavation.

There will be no measurement for construction of a Temporary Secured Stockpile Area. Construction of a Temporary Secured Stockpile Area, if necessary, is considered incidental to project construction. There will be no measurement for hauling impacted soil to the Temporary Secure Stockpile area or placement and removal of impacted soil in or out of the Temporary Secure Stockpile area. All hauling and any subsequent management/placement of contaminated soil is considered incidental to project construction.

There will be no measurement for additional laboratory testing of contaminated soil that is required by the landfill or treatment facility. Testing is incidental to the disposal of Special Excavation.

Measurement for the following items shall be according to Subsection 109:04 ("Change Order"/Force Account): any necessary contaminated water holding tank(s); and treatment or disposal of any contaminated groundwater.

Basis of Payment. There will be no payment for the identification and environmental screening of contaminated soil material as all soil in **Area A** is considered contaminated.

Payment for the development of a Health and Safety Plan (HASP) and providing health and safety equipment and personnel shall be by the lump sum

Payment for off site disposal or treatment of impacted soils at a MaineDEP licensed facility shall be by the ton of Special Excavation.

There will be no payment for the construction of the Temporary Secured Stockpile Area or hauling/management/placement of impacted soils to the Temporary Secured Stockpile Area. The Temporary Secured Stockpile Area shall be considered incidental to project construction.

Payment for the following items shall be according to Subsection 109:04 ("Change Order"/Force Account): any necessary contaminated water holding tank(s); and treatment or disposal of any contaminated groundwater.

Pay Item		Pay Unit
203.2312	Health and Safety Plan (HASP)	L.S.
203.2333	Disposal/Treatment of Special Excavation	Ton

SPECIAL PROVISION 400 - PAVEMENTS

SECTION 401 - HOT MIX ASPHALT PAVEMENT

401.01 Description The Contractor shall furnish a uniformly blended, homogeneous mixture placed as one or more courses of Hot Mix Asphalt Pavement (HMA) on an approved base in accordance with the contract documents and in reasonably close conformity with the lines, grades, thickness, and typical cross sections shown on the plans or established by the Resident. The Department will accept this work under Quality Assurance provisions, in accordance with these specifications and the requirements of Section 106 – Quality, the provisions of AASHTO M 323 except where otherwise noted in sections 401 and 703 of these specifications, and the MaineDOT Policies and Procedures for HMA Sampling and Testing.

401.02 Materials Materials shall meet the requirements specified in Section 700 - Materials:

Asphalt Cement	702.01
Aggregates for HMA Pavement	703.07
RAP for HMA Pavement	703.08
HMA Mixture Composition	703.09

401.03 Composition of Mixtures The Contractor shall compose the Hot Mix Asphalt Pavement with aggregate, Performance Graded Asphalt Binder (PGAB), and mineral filler if required. HMA shall be designed and tested according to AASHTO R35 and the volumetric criteria in Table 1. The Contractor shall size, uniformly grade, and combine the aggregate fractions in proportions that provide a mixture meeting the grading requirements of the Job Mix Formula (JMF).

The Contractor shall submit for Department approval a JMF to the Central Laboratory in Bangor for each mixture to be supplied. The Department may approve 1 active design per nominal maximum size, per traffic level, per plant, plus a 9.5mm "fine" mix for shimming and where required, a non-RAP design for bridge decks. The Department shall then have 15 calendar days in which to process a new design before approval. The JMF shall establish a single percentage of aggregate passing each sieve size within the limits shown in section 703.09. The mixture shall be designed and produced, including all production tolerances, to comply with the allowable control points for the particular type of mixture as outlined in 703.09. The JMF shall state the original source, gradation, and percentage to be used of each portion of the aggregate including RAP when utilized, and mineral filler if required. It shall also state the proposed PGAB content, the name and location of the refiner, the supplier, the source of PGAB submitted for approval, the type of PGAB modification if applicable, and the location of the terminal if applicable.

In addition, the Contractor shall provide the following information with the proposed JMF:

- Properly completed JMF indicating all mix properties (Gmm, VMA, VFB, etc.)
- Stockpile Gradation Summary
- Design Aggregate Structure Consensus Property Summary
- Design Aggregate Structure Trial Blend Gradation Plots (0.45 power chart)
- Trial Blend Test Results for at least three different asphalt contents
- Design Aggregate Structure for at least three trial blends
- Test results for the selected aggregate blend at a minimum of three binder contents
- Specific Gravity and temperature/viscosity charts for the PGAB to be used
- Recommended mixing and compaction temperatures from the PGAB supplier
- Material Safety Data Sheets (MSDS) For PGAB
- Asphalt Content vs. Air Voids trial blend curve
- Test report for Contractor's Verification sample

Summary of RAP test results (if used), including count, average and standard deviation of binder content and gradation

At the time of JMF submittal, the Contractor shall identify and make available the stockpiles of all proposed aggregates at the plant site. There must be a minimum of 150 ton for stone stockpiles, 75 ton for sand stockpiles, and 50 ton of blend sand before the Department will sample. The Department shall obtain samples for laboratory testing. The Contractor shall also make available to the Department the PGAB proposed for use in the mix in sufficient quantity to test the properties of the asphalt and to produce samples for testing of the mixture. Before the start of paving, the Contractor and the Department shall split a production sample for evaluation. The Contractor shall test its split of the sample and determine if the results meet the requirements of the Department's written policy for mix design verification (See MaineDOT Policies and Procedures for HMA Sampling and Testing available at the Central Laboratory in Bangor). If the results are found to be acceptable, the Contractor will forward their results to the Department's Lab, which will test the Department's split of the sample. The results of the two split samples will be compared and shared between the Department and the Contractor. If the Department finds the mixture acceptable, an approved JMF will be forwarded to the Contractor and paving may commence. The first day's production shall be monitored, and the approval may be withdrawn if the mixture exhibits undesirable characteristics such as checking, shoving or displacement.

The Contractor shall be allowed to submit aim changes within 24 hours of receipt of the first Acceptance test result. Should all of the Acceptance samples of a Lot be obtained prior to the receipt of the first Acceptance result, the Department will not allow the aim changes to be applied to that Lot. Adjustments will be allowed of up to 2% on the percent passing the 2.36 mm sieve through the 0.075 mm and 3% on the percent passing the 4.75 mm or larger sieves. Adjustments will be allowed on the %PGAB of up to 0.2%. Adjustments will be allowed on GMM of up to 0.010.

The Contractor shall submit a new JMF for approval each time a change in material source or materials properties is proposed. The same approval process shall be followed. The cold feed percentage of any aggregate may be adjusted up to 10 percentage points from the amount listed on the JMF, however no aggregate listed on the JMF shall be eliminated. The cold feed percentage for RAP may be reduced up to 10 percentage points from the amount listed on the JMF and shall not exceed the percentage of RAP approved in the JMF or for the specific application under any circumstances.

TABLE 1: VOLUMETRIC DESIGN CRITERIA

Design ESAL's (Millions)	Required Density (Percent of G_{mm})			Voids in the Mineral Aggregate (VMA)(Minimum Percent)					Voids Filled with Binder (VFB) (Minimum %)	Fines/Eff. Binder Ratio
				Nominal Maximum Aggregate Size (mm)						
	$N_{initial}$	N_{design}	N_{max}	25	19	12.5	9.5	4.75		
<0.3	≤91.5	96.0	≤98.0	13.0	14.0	15.0	16.0	16.0	70-80	0.6-1.2
0.3 to <3	≤90.5								65-80	
3 to <10	≤89.0								65-80*	
10 to <30										
≥ 30										

*For 9.5 mm nominal maximum aggregate size mixtures, the maximum VFB is 82.
*For 4.75 mm nominal maximum aggregate size mixtures, the maximum VFB is 84.

401.031 Warm Mix Technology The Contractor may place Hot Mix Asphalt Pavement produced with an accepted WMA technology if approved by the Department. Methods or technologies shall generally be at the Contractors option, but will be limited to proven, Agency and Industry accepted practice. Mixture production,

placement and volumetric testing details, including temperatures, shall be included in the project specific QCP, and submitted to the Department for approval prior to any work.

401.04 Temperature Requirements After the JMF is established, the temperatures of the mixture shall conform to the following tolerances:

In the truck at the mixing plant – allowable range 275 to 325°F
At the Paver – allowable range 275 to 325°F

The JMF and the mix subsequently produced shall meet the requirements of Tables 1 and Section 703.07.

401.05 Performance Graded Asphalt Binder Unless otherwise noted in Special Provision 403 - Hot Mix Asphalt Pavement, the Contractor may utilize either a 64-28 or 58-28 PGAB. The Contractor must stipulate which PGAB grading will be used to construct the entire HMA pavement structure prior to starting work. For mixtures containing greater than 20 percent but no more than 30 percent RAP the PGAB shall be PG 58-34 (or PG 52-34 when approved by the Department). The PGAB shall meet the applicable requirements of AASHTO M320 - Standard Specification for PGAB. Polymer-modified PGAB shall meet the applicable requirements of AASHTO MP 19. The Contractor shall provide the Department with an approved copy of the Quality Control Plan for PGAB in accordance with AASHTO R 26 Certifying Suppliers of PGAB.
The Contractor shall request approval from the Department for a change in PGAB supplier or source by submitting documentation stating the new supplier or source a minimum of 24 hours prior to the change. In the event that the PGAB supplier or source is changed, the Contractor shall make efforts to minimize the occurrence of PGAB co-mingling.

401.06 Weather and Seasonal Limitations The State is divided into two paving zones as follows:

a. Zone 1 Areas north of US Route 2 from Gilead to Bangor and north of Route 9 from Bangor to Calais.
b. Zone 2 Areas south of Zone 1 including the US Route 2 and Route 9 boundaries.

The Contractor may place Hot Mix Asphalt Pavement for use other than a traveled way wearing course in either Zone between the dates of April 15th and November 15th, provided that the air temperature as determined by an approved thermometer (placed in the shade at the paving location) is 40°F or higher.
The Contractor may place Hot Mix Asphalt Pavement produced with an accepted WMA technology for any base, intermediate base, or shim course in either Zone between the dates of April 15th and November 15th, provided that the air temperature as determined by an approved thermometer (placed in the shade at the paving location) is 35°F or higher, and the area to be paved is not frozen. The Hot Mix Asphalt Pavement produced with an approved WMA technology shall meet the requirements of section 401.04 - Temperature Requirements, unless otherwise approved by the Department.

The Contractor may place Hot Mix Asphalt Pavement as traveled way wearing course in Zone 1 between the dates of May 1st and the Saturday following October 1st and in Zone 2 between the dates of April 15th and the Saturday following October 15th, provided the air temperature determined as above is 50°F or higher. For the purposes of this Section, the traveled way includes truck lanes, ramps, approach roads and auxiliary lanes. The atmospheric temperature for all courses on bridge decks shall be 50°F or higher.

Hot Mix Asphalt Pavement used for curb, driveways, sidewalks, islands, or other incidentals is not subject to seasonal limitations, except that conditions shall be satisfactory for proper handling and finishing of the mixture. All mixtures used for curb, driveways, sidewalks, islands, or other incidentals shall conform to section 401.04 - Temperature Requirements. Unless otherwise specified, the Contractor shall not place Hot Mix Asphalt Pavement on a wet or frozen surface and the air temperature shall be 40°F or higher.

On all sections of overlay with wearing courses less than 1 in thick, the wearing course for the travelway and adjacent shoulders shall be placed between the dates of May 15th and the Saturday following September 15th.

On all sections of overlay with wearing courses less than 1 inch thick, the wearing course for the travelway and adjacent shoulders shall be placed between the dates of June 1st and the Saturday following September 1st if the work is to be performed, either by contract requirement, or Contractor option, during conditions defined as "night work".

401.07 Hot Mix Asphalt Plant

401.071 General Requirements HMA plants shall conform to AASHTO M156.

a. Truck Scales When the hot mix asphalt is to be weighed on scales meeting the requirements of Section 108 - Payment, the scales shall be inspected and sealed by the State Sealer as often as the Department deems necessary to verify their accuracy.

Plant scales shall be checked prior to the start of the paving season, and each time a plant is moved to a new location. Subsequent checks will be made as determined by the Resident. The Contractor will have at least ten 20 Kg [50 pound] masses for scale testing.

401.072 Automation of Batching Batch plants shall be automated for weighing, recycling, and monitoring the system. In the case of a malfunction of the printing system, the requirements of Section 401.074 c. of this specification will apply.

The batch plant shall accurately proportion the various materials in the proper order by weight. The entire batching and mixing cycle shall be continuous and shall not require any manual operations. The batch plant shall use auxiliary interlock circuits to trigger an audible alarm whenever an error exceeding the acceptable tolerance occurs. Along with the alarm, the printer shall print an asterisk on the delivery slip in the same row containing the out-of-tolerance weight. The automatic proportioning system shall be capable of consistently delivering material within the full range of batch sizes. When RAP is being used, the plant must be capable of automatically compensating for the moisture content of the RAP.

All plants shall be equipped with an approved digital recording device. The delivery slip load ticket shall contain information required under Section 108.1.3 - Provisions Relating to Certain Measurements, Mass and paragraphs a, b, and c of Section 401.073

401.073 Automatic Ticket Printer System on Automatic HMA Plant An approved automatic ticket printer system shall be used with all approved automatic HMA plants. The requirements for delivery slips for payment of materials measured by weight, as given in the following Sections, shall be waived: 108.1.3 a., 108.1.3 b., 108.1.3 c., and 108.1.3 d. The automatic printed ticket will be considered as the Weight Certificate.

The requirements of Section 108.1.3 f. - Delivery Slips, shall be met by the weigh slip or ticket, printed by the automatic system, which accompanies each truckload, except for the following changes:

a. The quantity information required shall be individual weights of each batch or total net weight of each truckload.
b. Signatures (legible initials acceptable) of Weighmaster (required only in the event of a malfunction as described in 401.074 c.).
c. The MaineDOT designation for the JMF.

401.074 Weight Checks on Automatic HMA Plant At least twice during each 5 days of production either of the following checks will be performed:

a. A loaded truck may be intercepted and weighed on a platform scale that has been sealed by the State Sealer of Weights and Measures within the past 12 months. The inspector will notify the producer to take corrective action on any discrepancy over 1.0%. The producer may continue to operate for 48 hours under the following conditions.

1. If the discrepancy does not exceed 1.5%; payment will still be governed by the printed ticket.
2. If the discrepancy exceeds 1.5%, the plant will be allowed to operate as long as payment is determined by truck platform scale net weight.

If, after 48 hours the discrepancy has not been addressed and reduced below 1.0%, than plant operations will cease. Plant operation may resume after the discrepancy has been brought within 1.0%.

b. Where platform scales are not readily available, a check will be made to verify the accuracy and sensitivity of each scale within the normal weighing range and to assure that the interlocking devices and automatic printer system are functioning properly.

c. In the event of a malfunction of the automatic printer system, production may be continued without the use of platform truck scales for a period not to exceed the next two working days, providing total weights of each batch are recorded on weight tickets and certified by a Licensed Public Weighmaster.

401.08 Hauling Equipment Trucks for hauling Hot Mix Asphalt Pavement shall have tight, clean, and smooth metal dump bodies, which have been thinly coated with a small amount of approved release agent to prevent the mixture from adhering to the bodies. Solvent based agents developed to strip asphalts from aggregates will not be allowed as release agents.

All truck dump bodies shall have a cover of canvas or other water repellent material capable of heat retention, which completely covers the mixture. The cover shall be securely fastened on the truck, unless unloading.

All truck bodies shall have an opening on both sides, which will accommodate a thermometer stem. The opening shall be located near the midpoint of the body, at least 12 in above the bed.

401.09 Pavers Pavers shall be self-contained, self-propelled units with an activated screed (heated if necessary) capable of placing courses of Hot Mix Asphalt Pavement in full lane widths specified in the contract on the main line, shoulder, or similar construction.

On projects with no price adjustment for smoothness, pavers shall be of sufficient class and size to place Hot Mix Asphalt Pavement over the full width of the mainline travel way with a 10 ft minimum main screed with activated extensions.

The Contractor shall place Hot Mix Asphalt Pavement on the main line with a paver using an automatic grade and slope controlled screed, unless otherwise authorized by the Department. The controls shall automatically adjust the screed and increase or decrease the layer thickness to compensate for irregularities in the preceding course. The controls shall maintain the proper transverse slope and be readily adjustable so that transitions and superelevated curves can be properly paved. The controls shall operate from a fixed or moving reference such as a grade wire or ski type device (floating beam) with a minimum length of 30 ft, a non-contact grade control with a minimum span of 24 ft, except that a 40 ft reference shall be used on Expressway projects.

The Contractor shall operate the paver in such a manner as to produce a visually uniform surface texture and a thickness within the requirements of Section 401.101 - Surface Tolerances. The paver shall have a receiving hopper with sufficient capacity for a uniform spreading operation and a distribution system to place the mixture uniformly, without segregation in front of the screed. The screed assembly shall produce a finished surface of the required evenness and texture without tearing, shoving, or gouging the mixture. Pavers with extendible screeds shall have auger extensions and tunnel extenders as per the manufacturer's recommendations, a copy of which shall be available if requested.

The Contractor shall have the paver at the project site sufficiently before the start of paving operations to be inspected and approved by the Department. The Contractor shall repair or replace any paver found worn or defective, either before or during placement, to the satisfaction of the Department. Pavers that produce an unevenly textured or non-uniform mat will be repaired or replaced before continuing to place HMA on MaineDOT projects.

On a daily basis, the Contractor shall perform density testing across the mat being placed, prior to being compacted by equipment at 12 in intervals. If the density values vary by more than 2.0% from the mean, the Contractor shall make adjustments to the screed until the inconsistencies are remedied. Failure to replace or repair defective placement equipment may result in a letter of suspension of work and notification of a quality control violation resulting in possible monetary penalties as governed by Section 106 - Quality

<u>401.10 Rollers</u> Rollers shall be static steel, pneumatic tire, oscillatory, or approved vibrator type. Rollers shall be in good mechanical condition, capable of starting and stopping smoothly, and be free from backlash when reversing direction. Rollers shall be equipped and operated in such a way as to prevent the picking up of hot mixed material by the roller surface. The use of rollers, which result in crushing of the aggregate or in displacement of the HMA will not be permitted. Any Hot Mix Asphalt Pavement that becomes loose, broken, contaminated, shows an excess or deficiency of Performance Graded Asphalt Binder, or is in any other way defective shall be removed and replaced at no additional cost with fresh Hot Mix Asphalt Pavement, which shall be immediately compacted to conform to the adjacent area.

The Contractor shall repair or replace any roller found to be worn or defective, either before or during placement, to the satisfaction of the Department. Rollers that produce grooved, unevenly textured or non-uniform mat will be repaired or replaced before continuing to place HMA on MaineDOT projects. The type of rollers to be used and their relative position in the compaction sequence shall generally be the Contractor's option, provided specification densities are attained and with the following requirements:

a. On variable-depth courses, the first lift of pavement over gravel, reclaimed pavement, on irregular or milled surfaces, or on bridges, at least one roller shall be 16 ton pneumatic-tired. Unless otherwise allowed by the Resident, pneumatic-tired rollers shall be equipped with skirting to minimize the pickup of HMA materials from the paved surface. When required by the Resident, the roller shall be ballasted to 20 ton.

b. Compaction with a vibratory or steel wheel roller shall precede pneumatic-tired rolling, unless otherwise authorized by the Department.

c. Vibratory rollers shall not be operated in the vibratory mode when checking or cracking of the mat occurs, or on bridge decks.

d. Any method, which results in cracking or checking of the mat, will be discontinued and corrective action taken.

e. The use of an oscillating steel roller shall be required to compact all mixtures placed on bridge decks.

The maximum operating speed for a steel wheel or pneumatic roller shall not exceed the manufacturer's recommendations, a copy of which shall be available if requested.

401.101 Surface Tolerances The Department will check surface tolerance utilizing the following methods :

a.) A 16 ft straightedge or string line placed directly on the surface, parallel to the centerline of pavement.
b.) A 10 ft straightedge or string line placed directly on the surface, transverse to the centerline of pavement.

The Contractor shall correct variations exceeding ¼ in by removing defective work and replacing it with new material as directed by the Department. The Contractor shall furnish a 10 foot straightedge for the Departments use.

401.11 Preparation of Existing Surface The Contractor shall thoroughly clean the surface upon which Hot Mix Asphalt Pavement is to be placed of all objectionable material. When the surface of the existing base or pavement is irregular, the Contractor shall bring it to uniform grade and cross section. All surfaces shall have a tack coat applied prior to placing any new HMA course. Tack coat shall conform to the requirements of Section 409 – Bituminous Tack Coat, Section 702 – Bituminous Material, and all applicable sections of the contract.

401.12 Hot Mix Asphalt Documentation The Contractor and the Department shall agree on the amount of Hot Mix Asphalt Pavement that has been placed each day. All delivery slips shall conform to the requirements of 401.073.

401.13 Preparation of Aggregates The Contractor shall dry and heat the aggregates for the HMA to the required temperature. The Contractor shall properly adjust flames to avoid physical damage to the aggregate and to avoid depositing soot on the aggregate.

401.14 Mixing The Contractor shall combine the dried aggregate in the mixer in the amount of each fraction of aggregate required to meet the JMF. The Contractor shall measure the amount of PGAB and introduce it into the mixer in the amount specified by the JMF.

The Contractor shall produce the HMA at the temperature established by the JMF.

The Contractor shall dry the aggregate sufficiently so that the HMA will not flush, foam excessively, or displace excessively under the action of the rollers. The Contractor shall introduce the aggregate into the mixer at a temperature of not more than 25°F above the temperature at which the viscosity of the PGAB being used is 0.150 Pa·s.

The Contractor shall store and introduce into the mixer the Performance Graded Asphalt Binder at a uniformly maintained temperature at which the viscosity of the PGAB is between 0.150 Pa·s and 0.300 Pa·s. The aggregate shall be coated completely and uniformly with a thorough distribution of the PGAB. The Contractor shall determine the wet mixing time for each plant and for each type of aggregate used. The resultant material shall be a uniformly blended, homogeneous HMA mixture.

401.15 Spreading and Finishing On areas where irregularities or unavoidable obstacles make the use of mechanical spreading and finishing equipment impracticable, the Contractor shall spread, rake, and lute the HMA with hand tools to provide the required compacted thickness. Solvent based agents developed to strip asphalts from aggregates will not be allowed as release agents.

On roadways with adjoining lanes carrying traffic, the Contractor shall place each course over the full width of the traveled way section being paved that day, unless otherwise noted by the Department in Section 403 - Hot Mix Asphalt Pavement.

In addition, hot mix asphalt pavement placed on bridges shall also conform to Section 508.04 and the following requirements.

a. The bottom course shall be placed with an approved rubber mounted paver of such type and operated in such a manner that the membrane waterproofing will not be damaged in any way.

b. The top course shall not be placed until the bottom course has cooled sufficiently to provide stability.

c. The Contractor will not be required to cut sample cores from the compacted pavement on the bridge deck, unless otherwise directed by Special Provision.

d. After the top course has been placed, the shoulder areas shall be sealed 3 ft wide with two applications of an emulsified bituminous sealer meeting the requirements of Section 612.03 – Sealing and Section 702.12 - Emulsified Bituminous Sealing Compound. The first application shall be pre-mixed with fine, sharp sand, similar to mortar sand, as needed to fill all voids in the mix in the area being sealed. The second application may be applied without sand. The sealer shall be carried to the curb at the gutter line in sufficient quantity to leave a bead or fillet of material at the face of the curb. The area to be sealed shall be clean, dry and the surface shall be at ambient temperature.

e. The furnishing and applying of the required quantity of sealer for the bridge shoulder areas shall be incidental to placing the hot mix asphalt pavement.

f. The atmospheric temperature for all courses placed on bridge decks shall be 50°F or higher.

<u>401.16 Compaction</u> Immediately after the Hot Mix Asphalt Pavement has been spread, struck off, and any surface irregularities adjusted, the Contractor shall thoroughly and uniformly compact the HMA by rolling.

The Contractor shall roll the surface when the mixture is in the proper condition and when the rolling does not cause undue displacement, cracking, or shoving. The Contractor shall prevent adhesion of the HMA to the rollers or vibrating compactors without the use of fuel oil or other petroleum based release agents. Solvents designed to strip asphalt binders from aggregates will not be permitted as release agents on equipment, tools, or pavement surfaces.

The Contractor shall immediately correct any displacement occurring as a result of the reversing of the direction of a roller or from other causes to the satisfaction of the Department. Any operation other than placement of variable depth shim course that results in breakdown of the aggregate shall be discontinued. Any new pavement that shows obvious cracking, checking, or displacement shall be removed and replaced for the full lane width as directed by the Resident at no cost to the Department.

Along forms, curbs, headers, walls, and other places not accessible to the rollers, the Contractor shall thoroughly compact the HMA with mechanical vibrating compactors. The Contractor shall only use hand tamping in areas inaccessible to all other compaction equipment. On depressed areas, the Contractor may use a trench roller or cleated compression strips under a roller to transmit compression to the depressed area.

Any HMA that becomes unacceptable due to cooling, cracking, checking, segregation or deformation as a result of an interruption in mix delivery shall be removed and replaced, with material that meets contract specifications at no cost to the Department.

401.17 Joints The Contractor shall construct wearing course transverse and longitudinal joints in such a manner that minimum tolerances shown in Section 401.101 - Surface Tolerances are met when measured with a straightedge.

The paver shall maintain a uniform head of HMA during transverse and longitudinal joint construction.

The HMA shall be free of segregation and meet temperature requirements outlined in section 401.04. Transverse joints of the wearing course shall be straight and neatly trimmed. The Contractor may form a vertical face exposing the full depth of the course by inserting a header, by breaking the bond with the underlying course, or by cutting back with hand tools. The Department may allow feathered or "lap" joints on lower base courses or when matching existing base type pavements.

Longitudinal joints shall be generally straight to the line of travel, and constructed in a manner that best ensure joint integrity. Methods or activities that prove detrimental to the construction of straight, sound longitudinal joints will be discontinued.

The Contractor shall apply a coating of emulsified asphalt immediately before paving all joints to the vertical face and 3 in of the adjacent portion of any pavement being overlaid except those formed by pavers operating in echelon. The Contractor shall use an approved spray apparatus designed for covering a narrow surface. The Department may approve application by a brush for small surfaces, or in the event of a malfunction of the spray apparatus, but for a period of not more than one working day.

Where pavement under this contract joins an existing pavement, or when the Department directs, the Contractor shall cut the existing pavement along a smooth line, producing a neat, even, vertical joint. The Department will not permit broken or raveled edges. The cost of all work necessary for the preparation of joints is incidental to related contract pay items.

401.18 Quality Control Method A, B & C The Contractor shall operate in accordance with the approved Quality Control Plan (QCP) to assure a product meeting the contract requirements. The QCP shall meet the requirements of Section 106.6 - Acceptance and this Section. The Contractor shall not begin paving operations until the Department approves the QCP in writing.

Prior to placing any mix, the Department and the Contractor shall hold a Pre-paving conference to discuss the paving schedule, source of mix, type and amount of equipment to be used, sequence of paving pattern, rate of mix supply, random sampling, project lots and sublots and traffic control. A copy of the QC random numbers to be used on the project shall be provided to The Resident. The Departments' random numbers for Acceptance testing shall be generated and on file with the Resident and the Project Manager. All personnel of the Department and the Contractor who have significant information relevant to the paving items shall attend, including the responsible onsite paving supervisor for the Contractor. The Resident will prepare minutes of the conference and distribute them to all attendees. Any requests to revise the minutes must be made to the Resident within 7 Days of Receipt. These minutes will constitute the final record of the Pre-paving conference.

The QCP shall address any items that affect the quality of the Hot Mix Asphalt Pavement including, but not limited to, the following:

a. JMF(s)
b. Hot mix asphalt plant details
c. Stockpile Management (to include provisions for a minimum 2 day stockpile)
d. Make and type of paver(s)
e. Make and type of rollers including weight, weight per inch of steel wheels, and average contact pressure for pneumatic tired rollers
f. Name of QCP Administrator, and certification number
g. Name of Process Control Technician(s) and certification number(s)
h. Name of Quality Control Technicians(s) and certification number(s)
i. Mixing & transportation including process for ensuring that truck bodies are clean and free of debris or contamination that could adversely affect the finished pavement
j. Testing Plan
k. Laydown operations including longitudinal joint construction, procedures for avoiding paving in inclement weather, type of release agent to be used on trucks tools and rollers, compaction of shoulders, tacking of all joints, methods to ensure that segregation is minimized, procedures to determine the maximum rolling and paving speeds based on best engineering practices as well as past experience in achieving the best possible smoothness of the pavement. Solvent based agents developed to strip asphalts from aggregates will not be allowed as release agents.
l. Examples of Quality Control forms including a daily plant report, daily paving report, and delivery slip template for any plant to be utilized.
m. Silo management and details (can show storage for use on project of up to 36 hours)
n. Provisions for varying mix temperature due to extraordinary conditions or production limitations. If a warm-mix technology is utilized, a proposed target production temperature range (not to exceed 50°F) will be provided for each mix design.
o. Name and responsibilities of the Responsible onsite Paving Supervisor.
p. Method for calibration/verification of Density Gauge
q. A note that all testing will be done in accordance with AASHTO and the MaineDOT Policies and Procedures for HMA Sampling and Testing.
r. A detailed description of RAP processing, stockpiling and introduction into the plant as well as a note detailing conditions under which the percent of RAP will vary from that specified on the JMF.
s. A detailed procedure outlining when production will be halted due to QC or Acceptance testing results.
t. A plan to address the change in PGAB source or supplier and the potential co-mingling of differing PGAB's.
u. A procedure to take immediate possession of acceptance samples once released by MaineDOT and deliver said samples to the designated acceptance laboratory.
v. Provisions for how the QCP will be communicated to the Contractor's field personnel

The QCP shall include the following technicians together with following minimum requirements:

a. QCP Administrator - A qualified individual shall administer the QCP. The QCP Administrator must be a full-time employee of or a consultant engaged by the Contractor or paving subcontractor. The QCP Administrator shall have full authority to institute any and all actions necessary for the successful operation of the QCP. The QCP Administrator (or its designee in the QCP Administrator's absence) shall be available to communicate with the Department at all times. The QCP Administrator shall be certified as a Quality Assurance Technologist certified by the New England Transportation Technician Certification Program (NETTCP).

b. Process Control Technician(s) (PCT) shall utilize test results and other quality control practices to assure the quality of aggregates and other mix components and control proportioning to meet the JMF(s). The PCT shall inspect all equipment used in mixing to assure it is operating properly and that mixing conforms to the mix design(s) and other Contract requirements, and that delivery slips and plant recordation accurately reflects the mix being produced with all the required information. The QCP shall detail how these duties and responsibilities are to be accomplished and documented, and whether more than one PCT is required. The Plan shall include the criteria to be utilized by the PCT to correct or reject unsatisfactory materials. The PCT shall be certified as a Plant Technician by the NETTCP.

c. Quality Control Technician(s) (QCT) shall perform and utilize quality control tests at the job site to assure that delivered materials meet the requirements of the JMF(s). The QCT shall inspect all equipment utilized in transporting, laydown, and compacting to assure it is operating properly and that all laydown and compaction conform to the Contract requirements. The QCP shall detail how these duties and responsibilities are to be accomplished and documented, and whether more than one QCT is required. The QCP shall include the criteria utilized by the QCT to correct or reject unsatisfactory materials. The QCT shall be certified as a Paving Inspector by the NETTCP.

The QCP shall detail the coordination of the activities of the Plan Administrator, the PCT and the QCT. The Project Superintendent shall be named in the QCP, and the responsibilities for successful implementation of the QCP shall be outlined.

The Contractor shall sample, test, and evaluate Hot Mix Asphalt Pavement in accordance with the following minimum frequencies:

TABLE 2 : MINIMUM QUALITY CONTROL FREQUENCIES

Test or Action	Frequency	Test Method
Temperature of mix	6 per day at street and plant	-
Temperature of mat	4 per day	-
%TMD (Surface)	1 per 125 ton (As noted in QC Plan)	ASTM D2950
%TMD (Base)	1 per 250 ton (As noted in QC Plan)	AASHTO T269
Fines / Effective Binder	1 per 500 ton	AASHTO T 312*
Gradation	1 per 500 ton	AASHTO T30
PGAB content	1 per 500 ton	AASHTO T164 or T308
Voids at N_{design}	1 per 500 ton	AASHTO T 312*
Voids in Mineral Aggregate at N_{design}	1 per 500 ton	AASHTO T 312*
Rice Specific Gravity	1 per 500 ton	AASHTO T209
Coarse Aggregate Angularity	1 per 5000 ton	ASTM D5821
Flat and Elongated Particles	1 Per 5000 ton	ASTM D4791
Fine Aggregate Angularity	1 Per 5000 ton	AASHTO T304

*Method A and B only

The Contractor may utilize innovative equipment or techniques not addressed by the Contract documents to produce or monitor the production of the mix, subject to approval by the Department.

The Contractor shall submit all Hot Mix Asphalt Pavement plant test reports, inspection reports and updated pay factors in writing, signed by the appropriate technician and present them to the Department by 1:00 P.M. on the next working day, except when otherwise noted in the QCP due to local restrictions. The Contractor shall also retain splits of the previous 5 QC tests, with QC results enclosed for random selection and testing by The Department during QA inspections of the HMA production facility. Test results of splits that do not meet the Dispute Resolution Variance Limits in Table 10 shall trigger an investigation by the MaineDOT Independent Assurance Unit, and may result in that lab losing NETTCP certification and the ability to request a dispute [Section 401.223 - Process for Dispute Resolution (Methods A , B and C only)].

The Contractor shall make density test results, including randomly sampled densities, available to the Department onsite. Summaries of each day's results, including a daily paving report, shall be recorded and signed by the QCT and presented to the Department by 1:00 p.m. the next working day.

The Contractor shall have a testing lab at the plant site, equipped with all testing equipment necessary to complete the tests in Table 2. The Contractor shall locate an approved Gyratory Compactor at the plant testing lab or within 30 minutes of the plant site.

The Contractor shall fill all holes in the pavement resulting from cutting cores by the Contractor or the Department with a properly compacted, acceptable mixture no later than the following working day. Before filling, the Contractor shall carefully clean the holes and apply a coating of emulsified asphalt. On surface courses, cores shall not be cut except for Verification of the Nuclear Density Gauge, at a rate not to exceed 3 per day or 2 per 1000 Mg [1000 ton] placed.

The Contractor shall monitor plant production using running average of three control charts as specified in Section 106 - Quality. Control limits shall be as noted in Table 3 below. The UCL and LCL, shall not exceed the allowable gradation control points for the particular type of mixture as outlined in Table 1 of section 703.09

TABLE 3: Control Limits

Property	UCL and LCL
Passing 4.75 mm and larger sieves	Target +/-4.0
Passing 2.36 mm sieve	Target +/-2.5
Passing .075 mm sieve	Target +/-1.2
PGAB Content*	Target +/-0.3
Voids in the Mineral Aggregate	LCL = LSL + 0.2
% Voids at N_{design}	JMF Target +/-1.3

*Based on AASHTO T 308

The Contractor shall cease paving operations whenever one of the following occurs on a lot in progress:

a. Method A: The Pay Factor for VMA, Voids @ N_d, Percent PGAB, composite gradation, VFB, fines to effective binder or density using all Acceptance or all Quality Control tests for the current lot is less than 0.85.
b. Method B: The Pay Factor for VMA, Voids @ N_d, Percent PGAB, composite gradation, VFB, fines to effective binder or density using all Acceptance or all Quality Control tests for the current lot is less than 0.90.
c. Method C: The Pay Factor for VMA, Voids @ $N_{d,}$ Percent PGAB, percent passing the nominal maximum sieve, percent passing 2.36 mm sieve, percent passing 0.300 mm sieve, percent passing 0.075 mm sieve or density using all Acceptance or all available Quality Control tests for the current lot is less than 0.85.

d. The Coarse Aggregate Angularity or Fine Aggregate Angularity value falls below the requirements of Table 3: Aggregate Consensus Properties Criteria in Section 703.07 for the design traffic level.
e. Each of the first 2 control tests for a Method A or B lot fall outside the upper or lower limits for VMA, Voids @ Nd, or Percent PGAB; or under Method C, each of the first 2 control tests for the lot fall outside the upper or lower limits for the nominal maximum, 2.36 mm, 0.300 mm or 0.075 mm sieves, or percent PGAB.
f. The Flat and Elongated Particles value exceeds 10% by ASTM D4791.
g. There is any visible damage to the aggregate due to over-densification other than on variable depth shim courses.
h. The Contractor fails to follow the approved QCP.

The Contractor shall notify the Resident in writing as to the reason for shutdown, as well as the proposed corrective action, by the end of the work day. Failure to do so will be treated as a second incident under 106.4.6 QCP Non-compliance. The Department will consider corrective action acceptable if the pay factor for the failing property increases, based on samples already in transit, or a verification sample is tested and the property falls within the specification limits.

In cases where the corrective action can be accomplished immediately, such as batch weight or cold feed changes, the Contractor may elect to resume production once the corrective action is completed. Additional QC testing shall be performed to verify the effectiveness of the corrective action. Subsequent occurrences of shutdown for the same property in a Lot in progress will require paving operations to cease. Paving operations shall not resume until the Contactor and the Department determines that material meeting the Contract requirements will be produced. The Department may allow the Contractor to resume production based upon a passing QC sample, with a split of the sample being sent to the Department for verification testing. If the submitted verification sample test results fall outside the specification limits, the Contractor shall cease production until a verification sample is submitted to the Department has been tested by the Department and found to be within specification limits.

If the Contractor's control chart shows the process to be out of control (defined as a single point outside of the control limits on the running average of three chart) on any property listed in Table 3: Control Limits, the Contractor shall notify the Resident in writing of any proposed corrective action by 1:00 PM the next working day.

The Department retains the exclusive right, with the exception of the first day's production of a new JMF, to determine whether the resumption of production involves a significant change to the production process. If the Department so determines, then the current lot will be terminated, a pay factor established, and a new lot will begin.

<u>401.19 Quality Control Method D</u> For Items covered under Method D, the Contractor shall submit a modified QC Plan detailing, how the mix is to be placed, what equipment is to be used, and what HMA plant is to be used. All mix designs (JMF) shall be approved and verified by MaineDOT prior to use. Certified QC personnel shall not be required. The Contractor shall certify the mix and the test results for each item by a Certificate of Compliance.

<u>401.20 Acceptance Method A, B & C</u> These methods utilizes Quality Level Analysis and pay factor specifications. For Hot Mix Asphalt Pavement designated for acceptance under Quality Assurance provisions, the Department will sample once per sublot on a statistically random basis, test, and evaluate in accordance with the following Acceptance Criteria:

TABLE 4: ACCEPTANCE CRITERIA

PROPERTIES	POINT OF SAMPLING	TEST METHOD
Gradation	Paver Hopper	AASHTO T30
PGAB Content	Paver Hopper	AASHTO T308
%TMD (Surface)	Mat behind all Rollers	AASHTO T269
%TMD (Base or Binder)	Mat behind all Rollers	AASHTO T269
Air Voids at N_d	Paver Hopper	AASHTO T 312
%VMA at N_d	Paver Hopper	AASHTO T 312
Fines to Effective Binder	Paver Hopper	AASHTO T 312
%VFB	Paver Hopper	AASHTO T 312

In the event the Department terminates a Lot prematurely but fails to obtain the required number of acceptance samples to calculate the volumetric property pay factor under the test method specified in the contract, the pay factor shall be calculated using the number of samples actually obtained from the contract. Should the number of acceptance samples taken total less than three, the resulting pay factor shall be 1.0 for volumetric properties. A minimum of three cores will be used for a density pay factor using the contract's specified Acceptance method, if applicable, for quantities placed to date.

Should the Contractor request a termination of the Lot in progress prior to three acceptance samples being obtained, and the Department agrees to terminate the Lot, then the pay factor for mixture properties shall be 0.80. A minimum of three cores will be used to determine a density pay factor using the contract's specified Acceptance method, if applicable, for quantities placed to date.

Lot Size For purposes of evaluating all acceptance test properties, a lot shall consist of the total quantity represented by each item listed under the lot size heading.

Sublot size - Refer to section 401.201, 401.202, and 401.203 for minimum size and number of sublots. The quantity represented by each sample will constitute a sublot.

If there is less than one-half of a sublot remaining at the end, then it shall be combined with the previous sublot. If there is more than one-half sublot remaining at the end, then it shall constitute the last sublot and shall be represented by test results. If it becomes apparent partway through a Lot that, due to an underrun, there will be insufficient mix quantity to obtain the minimum number of sublots needed, the Resident may adjust the size of the remaining sublots and select new sample locations based on the estimated quantity of material remaining in the Lot.

Acceptance Testing The Department will obtain samples of Hot Mix Asphalt Pavement in conformance with AASHTO T168 Sampling Bituminous Paving Mixtures, and the MaineDOT Policies and Procedures for HMA Sampling and Testing, which will then be transported by the Contractor to the designated MaineDOT Laboratory within 48 hours (except when otherwise noted in the project specific QCP due to local restrictions), as directed by MaineDOT in approved transport containers to be provided by the Department, unless otherwise directed by the Resident. Failure to deliver an acceptance sample to the designated acceptance laboratory will be considered the second incident under 106.4.6–QCP Non-Compliance.

The Department will take the sample randomly within each sublot. Target values shall be as specified in the JMF. The Department will use Table 5 for calculating pay factors for gradation, PGAB Content, Air Voids at N_{design}, VMA, Fines to Effective Binder and VFB. The Department will withhold reporting of the test results for the Acceptance sample until 7:00 AM, on the second working day of receipt of the sample, or after receipt of the Contractors results of the Acceptance sample split. Upon conclusion of each lot, where there is a minimum of four sublots, results shall be examined for statistical outliers, as stated in Section 106.7.2 - Statistical Outliers.

Isolated Areas During the course of inspection, should it appear that there is an isolated area that is not representative of the lot based on a lack of observed compactive effort, excessive segregation, a change in process or any other questionable practice, that area may be isolated and tested separately. An area so isolated that has a calculated pay factor below 0.80 for Method A and C or below 0.86 for Method B, based on three random tests shall be removed and replaced at the expense of the Contractor for the full lane width and a length not to be less than 150 ft.

Pavement Density The Department will measure pavement density using core samples tested according to AASHTO T-166. The Department will randomly determine core locations. The Contractor shall cut 6 inch diameter cores at no additional cost to the Department by the end of the working day following the day the pavement is placed, and immediately give them to the Department. Cores for Acceptance testing shall be cut such that the nearest edge is never within 9 inches of any joint. The cores will be placed in a transport container provided by the Department and transported by the Contractor to the designated MaineDOT Lab as directed by the Department. Pre-testing of the cores will not be allowed. At the time of sampling, the Contractor and the Department shall mutually determine if a core is damaged. If it is determined that the core(s) is damaged, the Contractor shall cut new core(s) at the same offset and within 3 ft of the initial sample. At the time the core is cut, the Contractor and the Department will mutually determine if saw cutting of the core is needed, and will mark the core at the point where sawing is needed. The core may be saw cut by the Contractor in the Department's presence onsite, or in an MaineDOT Lab by The Department, without disturbing the layer being tested to remove lower layers of Hot Mix Asphalt Pavement, gravel, or RAP. No recuts are allowed at a test location after the core has been tested. Upon conclusion of each lot, density results shall be examined for statistical outliers as stated in Section 106.7.2.

On all sections of overlay with wearing courses designed to be 3/4 in or less in thickness, there shall be no pay adjustment for density otherwise noted in Section 403 - Hot Mix Asphalt Pavement. For overlays designed to be 3/4 in or less in thickness, density shall be obtained by the same rolling train and methods as used on mainline travelway surface courses with a pay adjustments for density, unless otherwise directed by the Department.

There shall be no pay adjustment for density on shoulders unless otherwise noted in Section 403 - Hot Mix Asphalt Pavement. Density for shoulders shall be obtained by the same rolling train and methods as used on mainline travelway, unless otherwise directed by the Department. Efforts to obtain optimum compaction will not be waived by the Department unless it is apparent during construction that local conditions make densification to this point detrimental to the finished pavement surface course.

401.201 Method A Lot Size will be the entire production per JMF for the project, or if so agreed at the Pre-paving Conference, equal lots of up to 4500 tons, with unanticipated over-runs of up to 1500 ton rolled into the last lot. Sublot sizes shall be 750 ton for mixture properties, 500 ton for base or binder densities and 250 ton for surface densities. The minimum number of sublots for mixture properties shall be 4, and the minimum number of sublots for density shall be five.

TABLE 5: METHOD A ACCEPTANCE LIMITS

Percent Passing 4.75 mm and larger sieves	USL and LSL
Percent Passing 2.36 mm to 1.18 mm sieves	Target +/-7%
Percent Passing 0.60 mm	Target +/-4%
Percent Passing 0.30 mm to 0.075 mm sieve	Target +/-3%
PGAB Content	Target +/-2%
Air Voids	Target +/-0.4%
Fines to Effective Binder	4.0% +/-1.5%
Voids in the Mineral Aggregate	0.9 +/-0.3
Voids Filled with Binder	LSL Only from Table 1
% TMD (In-place Density)	Table 1 values plus a 4% production tolerance for USL only
Percent Passing 4.75 mm and larger sieves	95.0% +/- 2.5%

401.202 Method B Lot Size will be the entire production per JMF for the project and shall be divided into 3 equal sublots for Mixture Properties and 3 equal sublots for density.

TABLE 6: METHOD B ACCEPTANCE LIMITS

Property	USL and LSL
Percent Passing 4.75 mm and larger sieves	Target +/-7
Percent Passing 2.36 mm to 1.18 mm sieves	Target +/-5
Percent Passing 0.60 mm	Target +/-4
Percent Passing 0.30 mm to 0.075 mm sieve	Target +/-3
PGAB Content	Target +/-0.5
Air Voids	4.0% +/-2.0
Fines to Effective Binder	0.9 +/-0.3
Voids in the Mineral Aggregate	LSL from Table 1
Voids Filled with Binder	Table1 plus a 4% production tolerance for USL.
% TMD (In-place Density)	95.0% +/- 2.5%

401.203 Method C Lot Size will be the entire production per JMF for the project, or if so agreed at the Pre-paving Conference, equal lots of up to 4500 tons, with unanticipated over-runs of up to 1500 ton rolled into the last lot. Sublot sizes shall be 750 ton for mixture properties, 500 ton for base or binder densities and 250 ton for surface densities. The minimum number of sublots for mixture properties shall be 4, and the minimum number of sublots for density shall be five.

TABLE 7: METHOD C ACCEPTANCE LIMITS

Property	USL and LSL
Passing 4.75 mm and larger sieves	Target +/-7%
Passing 2.36 mm to 1.18 mm sieves	Target +/-5%
Passing 0.60 mm	Target +/-4%
Passing 0.30 mm to 0.075 mm sieve	Target +/-2%
PGAB Content	Target +/-0.4%
Air Voids	4.0% +/-1.5%
Fines to Effective Binder	0.9 +/-0.3
Voids in the Mineral Aggregate	LSL Only from Table 1
Voids Filled with Binder	Table 1 values plus a 4% production tolerance for USL only
% TMD (In place density)	95.0% +/- 2.5%

401.204 Method D For hot mix asphalt items designated as Method D in Section 403 - Hot Mix Asphalt Pavement, one sample will be taken from the paver hopper or the truck body per 250 ton per pay item. The mix will be tested for gradation and PGAB content. Disputes will not be allowed. If the mix is within the tolerances listed in Table 8: Method D Acceptance Limits, the Department will pay the contract unit price. Contractor shall cut two 6 in cores, which shall be tested for percent TMD per AASHTO T-269 unless otherwise noted in Section 403 - Hot Mix Asphalt Pavement. If the average for the two tests falls below 92.5% the disincentive shall apply. If the test results for each 250 ton increment are outside these limits, the following deductions (Table 8B) shall apply to the HMA quantity represented by the test.

TABLE 8: METHOD D ACCEPTANCE LIMITS

Property	USL and LSL
Percent Passing 4.75 mm and larger sieves	Target +/-7
Percent Passing 2.36 mm to 1.18 mm sieves	Target +/-5
Percent Passing 0.60 mm	Target +/-4
Percent Passing 0.30 mm to 0.075 mm sieve	Target +/-3
PGAB Content	Target +/-0.5
% TMD (In-place Density)	95.0% +/- 2.5%

TABLE 8B Method “D” Price Adjustments

PGAB Content	-5%
2.36 mm sieve	-2%
0.30 mm sieve	-1%
0.075 mm sieve	-2%
Density	-10%

401.21 Method of Measurement The Department will measure Hot Mix Asphalt Pavement by the ton in accordance with Section 108.1 - Measurement of Quantities for Payment.

401.22 Basis of Payment The Department will pay for the work, in place and accepted, in accordance with the applicable sections of this Section, for each type of HMA specified.

The Department will pay for the work specified in Section 401.11, for the HMA used, except that cleaning objectionable material from the pavement and furnishing and applying bituminous material to joints and contact surfaces is incidental. Payment for this work under the appropriate pay items shall be full compensation for all labor, equipment, materials, and incidentals necessary to meet all related contract requirements, including design

of the JMF, implementation of the QCP, obtaining core samples, transporting cores and samples, filling core holes, applying emulsified asphalt to joints, and providing testing facilities and equipment.
The Department will make a pay adjustment for quality as specified below.

401.221 Pay Adjustment The Department will sample, test, and evaluate Hot Mix Asphalt Pavement in accordance with Section 106 - Quality and Section 401.20 - Acceptance, of this Specification.

In addition, for 9.5 mm NMAS mixtures the following pay adjustment shall also apply:

The average percent passing for the 0.075 mm sieve shall be evaluated for each Lot. If the average is greater than 6.5%, a pay adjustment according to Table 8C below shall apply in addition to the other pay adjustments for the given method of testing.

TABLE 8C: 0.075 mm SIEVE PAY ADJUSTMENT

AVERAGE PERCENT PASSING 0.075 MM SIEVE	PAY ADJUSTMENT
6.6% - 7.0%	-5% Pay Adjustment
> 7.0%	-10% Pay Adjustment

The Department shall notify the Contractor whenever the average of at least three samples in a given Lot is greater than 6.5%.

401.222 Pay Factor (PF) The Department will use the following criteria for pay adjustment using the pay adjustment factors under Section 106.7 - Quality Level Analysis:

Density If the pay factor for Density falls below 0.80 for Method A or C or 0.86 for Method B, all of the cores will be randomly re-cut by Sublot. A new pay factor will be calculated that combines all initial and retest results. If the resulting pay factor is below 0.80 for Method A or C or below 0.86 for Method B, the entire Lot shall be removed and replaced with material meeting the specifications at no additional cost to the Department, except that the Department may, when it appears that there is a distinct pattern of defective material, isolate any defective material by investigating each mix sample sublot and require removal of defective mix sample sublots only, leaving any acceptable material in place if it is found to be free of defective material. Pay factors equal to or greater than the reject level will be paid accordingly.

Gradation For HMA evaluated under Acceptance Method A or B, the Department will determine a composite pay factor (CPF) using applicable price adjustment factors “f“ from Table 9: Table of Gradation Composite “f” Factors, and Acceptance limits from Table 5: Method A Acceptance Limits, for Method A or Table 6: Method B Acceptance Limits, for Method B. The Department will not make price adjustments for gradation on Methods A and B except for 9.5mm NMAS mixtures as outlined in Table 4A. Gradations for Methods A and B shall be monitored as shutdown criteria.

TABLE 9: TABLE OF GRADATION COMPOSITE " f " FACTORS (Methods A and B)

Constituent		"f" Factor			
		19 mm	12.5 mm	9.5 mm	4.75 mm
Gradation	25 mm	-	-	-	-
	19 mm	4	-	-	-
	12.5 mm		4	4	-
	9.50 mm				4
	2.36 mm	6	6	6	8
	1.18 mm				
	0.60 mm	2	2	2	2
	0.30 mm	2	2	2	2
	0.075 mm	6	6	6	8

For HMA evaluated under Acceptance Method C, the Department will determine a pay factor using acceptance limits from Table **7**: Method C Acceptance Limits.

VMA, Air Voids, VFB and Fines to Effective Binder The Department will determine a pay factor (PF) using the applicable Acceptance Limits.

The following variables will be used for pay adjustment:

PA = Pay Adjustment
Q = Quantity represented by PF in ton
P = Contract price per ton
PF = Pay Factor

Pay Adjustment Method A

The Department will use the following criteria for pay adjustment: density, Performance Graded Asphalt Binder content, voids @N_d, VMA, VFB, F/B_{eff}, and the screen sizes listed in Table 9 for the type of HMA represented in the JMF. If any single pay factor for PGAB Content, VMA, or Air Voids falls below 0.80, then the composite pay factor for PGAB Content, VMA, and Air Voids shall be 0.55.

Density: For mixes having a density requirement, the Department will determine a pay factor using Table 5: Method A Acceptance Limits:

PA = (density PF- 1.0)(Q)(P)x0.50

PGAB Content, VMA and Air Voids: The Department will determine a pay adjustment using Table 5: Method A Acceptance Limits as follows:

PA = (voids @ N_d PF- 1.0)(Q)(P)x0.20 + (VMA @ N_d PF- 1.0)(Q)(P)x0.20 + (PGAB PF- 1.0)(Q)(P)x0.10

VFB and Fines to Effective Binder The Department will determine a pay factor (PF) using Table 5: Method A Acceptance Limits. The Department will not make price adjustments for VFB or Fines to Effective Binder, but will monitor them as shutdown criteria.

Pay Adjustment Method B

The Department will use the following criteria for pay adjustment: density, Performance Graded Asphalt Binder content, voids @N_d, VMA, VFB, F/B_{eff}, and the screen sizes listed in Table 9 for the type of HMA represented in the JMF. If any single pay factor for PGAB Content, VMA, or Air Voids falls below 0.86, then the composite pay factor for PGAB Content, VMA, and Air Voids shall be 0.70.

Density: For mixes having a density requirement, the Department will determine a pay factor using Table 6: Method B Acceptance Limits:

PA = (density PF- 1.0)(Q)(P)x0.50

PGAB Content, VMA and Air Voids: The Department will determine a pay adjustment using Table 6: Method B Acceptance Limits as follows:

PA = (voids @ N_d PF- 1.0)(Q)(P)x0.20 + (VMA @ N_d PF- 1.0)(Q)(P)x0.20 + (PGAB PF- 1.0)(Q)(P)x0.10

VFB and Fines to Effective Binder The Department will determine a pay factor (PF) using Table 6: Method B Acceptance Limits. The Department will not make price adjustments for VFB or Fines to Effective Binder, but will monitor them as shutdown criteria.

Pay Adjustment Method C

The Department will use density, Performance Graded Asphalt Binder content, and the percent passing the nominal maximum, 2.36 mm, 0.300 mm and 0.075 mm sieves for the type of HMA represented in the JMF. If the PGAB content falls below 0.80, then the PGAB pay factor shall be 0.55.

Density: For mixes having a density requirement, the Department will determine a pay factor using Table 7: Method C Acceptance Limits:

PA = (density PF- 1.0)(Q)(P)x0.50

PGAB Content and Gradation The Department will determine a pay factor using Table **7**: Method C Acceptance Limits. The Department will calculate the price adjustment for Mixture Properties as follows:

PA = (% Passing Nom. Max PF-1.0)(Q)(P)X0.05+(% passing 2.36 mm PF-1.0)(Q)(P)X0.05+(%passing 0.30 mm PF-1.0)(Q)(P)X0.05+(%passing 0.075 mm PF-1.0)(Q)(P)X0.10+(PGAB PF-1.0)(Q)(P)X0.25

VMA, Air Voids, VFB and Fines to Effective Binder The Department will determine a pay factor (PF) using Table 7: Method C Acceptance Limits. The Department will not make price adjustments for VMA, Air Voids, VFB or Fines to Effective Binder, but will monitor them as shutdown criteria.

Pay Adjustment Method D

The Department will use density, Performance Graded Asphalt Binder content, and the screen sizes listed in Table 8b for the type of HMA represented in the JMF. If test results do not meet the Table 8 requirements, deducts as shown in Table 8b shall be applied to the quantity of mix represented by the test.

401.223 Process for Dispute Resolution (Methods A B & C only)

a. Dispute Resolution sampling At the time of Hot-Mix Asphalt sampling, the Department will obtain a split sample of each Acceptance test random sample for possible dispute resolution testing. The Contractor shall also obtain a split sample of the HMA at this same time. If the Contractor wishes to retain the option of requesting dispute testing of the initial Acceptance sample, the Contractor will test their split of the

Acceptance sample and shall report their results to the Resident, with a copy to the QA Engineer by 7:00 AM, on the second working day from time of QA sampling, otherwise dispute resolution will not be initiated. The Department's dispute resolution split sample will be properly labeled and stored for a period of at least two weeks, or until the sample is tested.

b. Disputing Acceptance results The Contractor may dispute the Department's Acceptance results and request (Methods A, B, & C) that the dispute resolution split sample be tested by notifying the Department's Resident and the QA Engineer in writing within two working days after receiving the results of the Acceptance test. The following shall be provided in the request:

- Acceptance sample reference number
- The specific test result(s) or property(ies) being disputed, and
- The complete, signed report of the Contractor's testing (In a lab certified by the NETTCP and MaineDOT) of their split of the Acceptance sample indicating that the variances in Table10: Dispute Resolution Variance Limits, for the specific test result(s) or property(ies) were exceeded.

c. Disputable items

For Methods A and B: The Contractor may dispute any or all of the following test results when the difference between the Department's value and the Contractor's value for that test equals or exceeds the corresponding allowable variation in Table 10: Dispute Resolution Variance Limits, PGAB content, G_{mb}, and G_{mm}. In addition, if the allowable variation for the G_{mb} or G_{mm} is not met or exceeded, the Contractor may dispute either or both of the following material properties provided the difference between results for them equals or exceeds the corresponding allowable variation in Table 10: Voids at N_{design}, and VMA. The Contractor may dispute the 0.075 mm sieve test result when a 9.5 mm NMAS mixture is used.

For Method C only: The results for PGAB content and the screen sizes used for pay adjustment may be disputed.

d. Outcome The value of any disputed result or property reported for the initial Acceptance sample shall stand if the value reported for the dispute resolution sample is not closer to the value the Contractor reported for their split sample than to the value reported for the initial Acceptance sample. If the value reported for the dispute resolution falls precisely half-way between the other two values the value reported for the dispute resolution will replace the original acceptance value. Otherwise, the value reported for the dispute resolution sample will replace the value reported for the initial Acceptance sample, and will be used to re-calculate any other affected results or properties.

TABLE 10: DISPUTE RESOLUTION VARIANCE LIMITS

PGAB Content	+/-0.4%
G_{mb}	+/-0.030
G_{mm}	+/-0.020
Voids @ N_d	+/-0.8%
VMA	+/-0.8%
Passing 4.75 mm and larger sieves	+/- 4.0%
Passing 2.36 mm to 0.60 mm sieves	+/- 3.0%
Passing 0.30 mm to 0.15	+/- 2.0 %
0.075 mm sieve	+/- 1.0%

SECTION 402 - PAVEMENT SMOOTHNESS

402.00 Smoothness Projects Projects to have their pavement smoothness analyzed in accordance with this Specification will be so noted in Special Provision 403 - Hot Mix Asphalt Pavement

402.01 Pavement Smoothness The final pavement surface shall be evaluated for smoothness using a Class I or Class II profiler as defined by ASTM E950 (94). Smoothness measurements will be expressed in terms of the International Roughness Index (IRI) as defined by the World Bank, in units of inches/mile.

402.02 Lot Size Lot size for smoothness will be 3000 lane-feet. A sublot will consist of 20 50 lane-feet. Partial lots will be included in the previous lot if less than one-half the size of a normal lot. If equal to or greater than one-half the normal lot size, it will be tested as a separate lot.

402.03 Acceptance Testing The Department will conduct Acceptance testing following completion of the surface course. Sections to be excluded from testing include the following:

Bridge decks and joints (no smoothness measurements will be taken within 100 ft of bridge joints)
Acceleration and deceleration lanes
Shoulders and ramps
Side streets and roads
Within 100 ft of transverse joints at the beginning and end of the project
Within 100 ft of railroad crossings
Urban areas with speed limits of 30 mph or lower

Each lot shall have 2 measurements made in each wheel path. The average of the 4 measurements will determine the smoothness for that lot.

The smoothness measurements will be statistically evaluated for pay factors as described in Subsection 106.7 - Quality Level Analysis, using the specification limits shown below.

ACCEPTANCE LIMITS

Level	USL
I	60 in/mile
II	70 in/mile
III	80 in/mile

Computation of Smoothness Pay Adjustment:

PA = (PF-1.0)(Q)(P)
where:
Q = Quantity of surface course in the Lot (excluding shoulders, side streets, bridge decks, ramps, acceleration and deceleration lanes)
PF = smoothness pay factor for the Lot
P = Contract unit price for surface pavement
PA = pay adjustment

402.04 Unacceptable Work In the event that any Lot is found to have a pay factor less than 0.80, the Contractor shall take whatever remedial action is required to correct the pavement surface in that Lot at no additional expense to the Department. Such remedial action may include but is not limited to removal and replacement of the unacceptable pavement. In the event remedial action is necessary, the Contractor shall submit a written plan to the Resident outlining the scope of the remedial work. The Resident must approve this plan before the remedial work can begin. Following remedial work, the Lot shall be retested, and will be subject to the specification limits listed above. The resulting pay factor, if within the acceptable range, will be used in the final pay adjustment. The Contractor shall pay the cost of retesting the pavement following corrective action. Localized surface tolerance defects will be subject to the provisions outlined in Section 401.101 Surface Tolerances.

Payment will be made under:

Pay Item	Pay Unit
402.10 Incentive/Disincentive - Pavement Smoothness	Lump Sum

SECTION 403 - HOT MIX ASPHALT PAVEMENT

403.01 Description This work shall consist of constructing one or more courses of Hot Mix Asphalt pavement on an approved base in accordance with these specifications, and in reasonably close conformity with the lines, grades, thickness and typical cross sections shown on the plans or established.

The HMA pavement shall be composed of a mixture of aggregate, filler if required, and asphalt material.

403.02 General The materials and their use shall conform to the requirements of Section 401 - Hot Mix Asphalt Pavement.

403.03 Construction The construction requirements shall be as specified in Section 401 - Hot Mix Asphalt Pavement.

403.04 Method of Measurement Hot mix asphalt pavement will be measured as specified in Section 401.21-Method of Measurement.

403.05 Basis of Payment The accepted quantities of hot mix asphalt pavement will be paid for at the contract unit price per ton for the mixtures, including hot mix asphalt material complete in place.

Method A, Method B, Method C and Method D shall be used for acceptance as specified in Section 401 - Hot Mix Asphalt Pavements. (See Complementary Notes, Section 403 - Hot Mix Asphalt Pavement, for Method location).

Payment will be made under:

	Pay Item	Pay Unit
403.102	Hot Mix Asphalt Pavement for Special Areas	Ton
403.206	Hot Mix Asphalt, 25 mm Nominal Maximum Size	Ton
403.207	Hot Mix Asphalt, 19.0 mm Nominal Maximum Size	Ton
403.2071	Hot Mix Asphalt , 19.0 mm Nominal Maximum Size (Polymer Modified)	Ton
403.2072	Asphalt Rich Hot Mix Asphalt, 19.0 mm Nominal Maximum Size (Asphalt Rich Base and Intermediate course)	Ton
403.2073	Warm Mix Asphalt, 19.0 mm Nominal Maximum Size	Ton
403.208	Hot Mix Asphalt, 12.5 mm Nominal Maximum Size	Ton
403.2081	Hot Mix Asphalt - 12.5 mm Nominal Maximum Size (Polymer Modified)	Ton
403.20813	Warm Mix Asphalt - 12.5 mm Nominal Maximum Size (Polymer Modified)	Ton
403.2083	Warm Mix Asphalt, 12.5 mm Nominal Maximum Size	Ton
403.209	Hot Mix Asphalt, 9.5 mm Nominal Maximum Size (sidewalks, drives, islands & incidentals)	Ton
403.210	Hot Mix Asphalt, 9.5 mm Nominal Maximum Size	Ton
403.2101	Hot Mix Asphalt, 9.5 mm Nominal Maximum Size (Polymer Modified)	Ton
403.2102	Asphalt Rich Hot Mix Asphalt, 9.5 mm Nominal Maximum Size (Asphalt Rich Intermediate course)	Ton
403.2103	Warm Mix Asphalt, 9.5 mm Nominal Maximum Size	Ton
403.2104	Hot Mix Asphalt, 9.5 mm Nominal Maximum Size (Thin Lift Surface Treatment)	Ton
403.211	Hot Mix Asphalt, 9.5 mm Nominal Maximum Size (Shimming)	Ton
403.2111	Hot Mix Asphalt, 9.5 mm Nominal Maximum Size (Shimming, Polymer Modified))	Ton
403.2113	Warm Mix Asphalt, 9.5 mm Nominal Maximum Size (Shimming)	Ton
403.212	Hot Mix Asphalt, 4.75 mm Nominal Maximum Size	Ton
403.2123	Warm Mix Asphalt, 4.75 mm Nominal Maximum Size	Ton
403.213	Hot Mix Asphalt, 12.5 mm Nominal Maximum Size (Base and Intermediate Base course)	Ton
403.2131	Hot Mix Asphalt, 12.5 mm Nominal Maximum Size (Base and Intermediate Base course, Polymer Modified)	Ton
403.2132	Asphalt Rich Hot Mix Asphalt, 12.5 mm Nominal Maximum Size (Base and Intermediate Base course)	Ton
403.2133	Warm Mix Asphalt, 12.5 mm Nominal Maximum Size (Base and Intermediate Base course)	Ton
403.214	Hot Mix Asphalt, 4.75 Nominal Maximum Size (5/8” Surface Treatment)	Ton
403.2143	Warm Mix Asphalt, 4.75 Nominal Maximum Size (5/8” Surface Treatment)	Ton

SPECIAL PROVISION
DIVISION 400
PAVEMENTS

SECTION 401 - HOT MIX ASPHALT PAVEMENT
(Longitudinal joint construction using wedge/taper apparatus)

The Special Provision 400. Section 401 – Hot Mix Asphalt Pavement, subsection 401.15 – Spreading and Finishing, and subsection 401.17- Joints have been modified with the following revisions. All sections not revised by this Special Provision shall be as outlined in the Special Provision 400 Pavements, Section 401 – Hot Mix Asphalt Pavement. References to Standard Specifications, Special Provisions, or other documents, shall be determined as the most current version available at the time of bid, or as amended. All costs associated with this Item will not be paid for directly, but shall be considered included in the associated contract items.

401.15 Spreading and Finishing The section has been amended as follows:

On areas where irregularities or unavoidable obstacles make the use of mechanical spreading and finishing equipment impracticable, the Contractor shall spread, rake, and lute the HMA with hand tools to provide the required compacted thickness. Solvent based agents that strip asphalts from aggregates will not be allowed as release agents.

On roadways with adjoining lanes carrying traffic, the Contractor shall place each course over the full width of the traveled way section being paved that day, unless otherwise noted by the Department in Section 403 - Hot Bituminous Pavement, or within this Special Provision.

When an approved longitudinal joint construction method is utilized, such as a manufactured notched wedge apparatus, the Department may allow the placement of mixtures in one continuous lane for each calendar day worked, with the following conditions:

The Contractor may utilize a manufactured notched wedge joint apparatus on all HMA layers 1 ½ inch or greater in Zone 1 between the dates of May 30th and the Saturday following September 1st, and in Zone 2 between the dates of May 15th and the Saturday following September 15th. When the work is to be performed, either by contract requirement or Contractor option, during conditions defined as “night work”, the same seasonal limitations shall apply unless the Department determines that the construction method is producing an unsound joint. This work will not be allowed during times of inclement weather as outlined in Division 400 – Special Provision 401; subsection 401.06 Weather and Seasonal Limitations.

If this option is utilized on roadways with two-way traffic, the Contractor will be required to place a matching course of HMA over the adjacent section of travel lane before the end of the following calendar day. Failure to match the centerline course the following day will constitute a traffic control violation unless an excusable delay is granted by the Department.

If this option is utilized on divided highways or expressways with directional traffic, the Contractor will be required to place a matching course of HMA over the adjacent section of travel lane within seven calendar days from placement of the initial paved lane. Failure to match the centerline course the within the seven calendar days will constitute a traffic control violation unless an excusable delay is granted by the Department.

The Contractor will also be responsible for installing additional warning signage that clearly defines the centerline elevation differential hazard, as well as additional centerline delineation such as double RPM application, or temporary painted line. The Traffic Control Plan shall include this option and the additional requirements. All signs and traffic control devices will conform to Section 719.01, and Section 652, and will be installed prior to the work, at a maximum spacing of 0.50 mile [0.80 km] for the entire length of the effected roadway section. On roadways with two-way traffic, the Contractor will be required to place the specified course over the full width of the mainline traveled way being paved prior to opening the sections to weekend or holiday traffic. If this option is utilized, all additional signing, labor, traffic control devices, or incidentals will not be paid for directly, but will be considered incidental to the appropriate 652 bid items.

The Department reserves the right to have centerline cores cut by the Contractor's QC personnel for informational purposes to monitor the density along the joint. Informational cores at the centerline joint will be taken centered over the tapered part of the wedge joint.

Any notched wedge joint constructed areas that become cracked or broken shall be trimmed back to the limits affected prior to placing the adjoining lane. Any materials that become unbound or separated from the wedge or tapered joint section, or contaminated by materials determined by the Department as being detrimental to the construction of a sound construction joint, shall be removed by sweeping, compressed air and lance, or by hand tools as required. This work, if necessary, will not be paid for directly, but shall be considered incidental to the related contract items.

<u>401.17 Joints</u> The following section has been amended as follows:

Should the notched wedge joint device be used, the Contractor shall apply a coating of emulsified asphalt on the vertical and tapered surface of the longitudinal centerline joint immediately before paving. The rate of application shall be approximately 0.050 G/SY. This application shall be in addition to the normal application of tack coats to the construction joint face and horizontal surfaces prior to placing a new lift. The Contractor shall use an approved spray apparatus designed for covering a narrow surface. The Department may approve application by a brush for small surfaces, or in the event of a malfunction of the spray apparatus, but for a period of not more than one working day.

SPECIAL PROVISION
SECTION 401
HOT MIX ASPHALT PAVEMENT

401 HOT MIX ASPHALT LONGITUDINAL JOINT DENSITY

401.30 Description The Department will measure the pavement density of longitudinal joints constructed between adjoining travel lanes. Core samples shall be tested according to AASHTO T-166. The Department will randomly determine core locations. The Contractor shall cut 6 in diameter cores at no additional cost to the Department by the end of the working day following the day the pavement is placed, and immediately give them to the Department. The cores will be placed in a transport container provided by the Department and transported by the Contractor to the designated MaineDOT Lab as directed by the Department. Pre-testing of the acceptance cores will not be allowed. At the time of sampling, the Contractor and the Department shall mutually determine if a core is damaged. If it is determined that the core(s) is damaged, the Contractor shall cut new core(s) at the same offset and within 3 ft of the initial sample. At the time the core is cut, the Contractor and the Department will mutually determine if saw cutting of the core is needed, and will mark the core at the point where sawing is needed. The core may be saw cut by the Contractor in the Department's presence onsite, or in a MaineDOT Lab by the Department, without disturbing the layer being tested to remove lower layers of Hot Mix Asphalt Pavement, gravel, or RAP. No recuts are allowed at a test location after the core has been tested.

Cores shall be taken directly over the construction joint. Should the notched wedge joint device be used, the cores shall be cut directly over the center of the taper portion of the wedge (approximately centered 3” from the visible joint).

As part of the project specific QCP, the Contractor shall include details as to methods of construction, rolling and compaction efforts, and action plan to adjust methods or equipment should the Quality level fall below 50 percent within limits. The Contractor shall be required to measure the joint density at randomly selected locations with a minimum frequency of one measurement per 750 linear feet. The Contractor shall have the option to cut calibration/verification cores at a rate not to exceed 1 per day.

If the Quality level for density falls below 50 percent within limits, the Contractor shall make corrective action to the longitudinal joint construction method before proceeding with the Lot, or before starting a new Lot. In cases where the corrective action can be shown to immediately increase density, such as with informational cores or density gauge readings, the Contractor may elect to resume production once the corrective action methods are established. Additional QC testing shall be performed to verify the effectiveness of the corrective action. Should the Quality Level for density remain at or fall below 50 percent within limits, then the Contractor shall be required to make further adjustments to the construction method. The Department will consider corrective action acceptable if the density pay factor increases based on verification samples or acceptance samples.

401.31 Acceptance This method utilizes Quality Level Analysis and pay factor specifications as described in Section 106. For Hot Mix Asphalt Pavement designated for acceptance under Quality Assurance provisions, the Department will sample once per sublot on a statistically random basis, test, and evaluate in accordance with the following Acceptance Criteria:

Lot size will be the entire length of longitudinal joint for the given HMA layer for the project, or equal Lots of a size agreed upon at the Pre-paving conference. The maximum sublot size shall be 1500 linear feet of longitudinal joint for density and the minimum number of sublots for any Lot shall be five. The Lot will be divided up into sublots of equal length. There shall be a separate Lot for each lift of HMA pavement, and Lots shall not be comprised of results from more than one HMA layer.

The Department will determine a pay factor using acceptance limits from Table 1.

TABLE 1: LONGITUDNAL JOINT DENSITY ACCEPTANCE LIMITS

PROPERTY	LSL
% TMD (In-place density)*	91.0

* The Theoretical Maximum Density will be determined from the average of the Gmm values used to determine the percent compaction of the nearest acceptance cores on either side of the Centerline Joint Core from each adjacent mat.

The Department will calculate the Pay Adjustment for Centerline Joint Density as follows:

PA = (joint density PF- 1.0)(Q)(P) x0.40

Where

PA = Pay Adjustment
Q = Quantity of traveled way pavement represented by PF in tons
P = Contract price per ton
PF = Pay Factor

If the joint density Pay Factor is less than 0.88, the Pay Adjustment shall be:

PA = (-0.05)(Q)(P)

SPECIAL PROVISION
SECTION 403
HOT MIX ASPHALT

Desc. Of Course	Grad Design.	Item Number	Bit Cont. % of Mix	Total Thick	No. Of Layers	Comp. Notes
3" Bridge St. Bridge Deck						
Wearing	12.5 mm	403.2081	N/A	1½"	1	2,5,8,12,30
Base	12.5 mm	403.2131	N/A	1½"	1	2,5,8,12,30
6" – Bridge St. Travel way & Shoulders						
Wearing	12.5 mm	403.2081	N/A	1½"	1	5,8,12,30
Base	12.5 mm	403.2131	N/A	1½"	1	5,8,12,30
Base	19.0 mm	403.207	N/A	3"	1	1,4,8
1½" – Existing Bridge St. Mill and Fill						
Wearing	9.5 mm	403.210	N/A	1½"	1	1,5,10,17
4" – Parking Lot Reconstruction						
Wearing	9.5 mm	403.210	N/A	1½"	1	1,5,10,17
Base	12.5 mm	403.213	N/A	2½"	1	1,5,10,17
6" or Match Existing – Curb Installation Areas						
Base	9.5 mm	403.210	N/A	1½"	1	1,2,4,18
Base	12.5 mm	403.213	N/A	4½"	2/more	1,2,4,18
2" – Sidewalks, Drives, Islands and Incidentals						
Wearing	9.5 mm	403.209	N/A	2"	2/more	2,3,10,14

COMPLEMENTARY NOTES

1. The required PGAB for this mixture will meet a **PG 64-28** grading.
2. The density requirements are waived. The use of an oscillating steel roller shall be required to compact all HMA pavements placed on bridge decks in addition to the normal roller train.
3. The design traffic level for mix placed shall be <0.3 million ESALS. The design, verification, Quality Control, and Acceptance tests for this mix will be performed at **50 gyrations**.
4. The aggregate qualities shall meet the design traffic level of 3 to <10 million ESALS for mix placed under this contract. The design, verification, Quality Control, and Acceptance tests for this mix will be performed at **50 gyrations**.
5. The aggregate qualities shall meet the design traffic level of 3 to <10 million ESALS for mix placed under this contract. The design, verification, Quality Control, and Acceptance tests for this mix will be performed at **75 gyrations**.
8. Section 106.6 Acceptance, (2) Method B. The Contractor may request a contract modification to change to testing method "A" prior to work starting on this item.
10. Section 106.6 Acceptance, (2) Method D.
12. The combined aggregate gradation required for this item shall be classified as a 12.5mm "**fine graded "** mixture, (using the Primary Control Sieve control point) as defined in 703.09.
14. The combined aggregate gradation required for this item shall be classified as a 9.5mm

Thin Lift Mixture (TLM) mixture, using the Aggregate Gradation Control Points as defined in 703.09.

17. Compaction of the new Hot Mix Asphalt Pavement will be obtained using a minimal roller train consisting of a **10 ton** vibratory, **12 ton** pneumatic, and a **10 ton** finish roller for roadway work. Density testing of the mixture will be performed by the QCT using a density meter (according to ASTM D 2950). The mixture will be rolled until the density readings show less than 1 pcf change for the final roller passes. This density will be used as the target TMD for the mixture. The remaining mixture shall be compacted to a minimum density of 95% of the target density as determined in the control section. The Contractor shall make density test results, including randomly sampled densities, available to the Department's representative onsite. Summaries of each day's results, including a daily paving report, summarizing the mixture type, mixture temperature, equipment used, environmental conditions, and number of roller passes, shall be recorded and signed by the QCT and presented to the Department's representative by the end of the working day. An approved release agent is required to ensure the mixture dose not adhere to hand tools, rollers, pavers, and truck bodies. The use of petroleum based fuel oils, or asphalt stripping solvents will not be permitted. The Department may require cores for informational purposes.
18. The Department will accept or reject any HMA based on a visual basis, either prior to it's use, during placement, or in it's final disposition.
30. The required PGAB shall be a storage-stable, pre-blended, homogeneous, polymer modified asphalt binder that meets **PG 64E-28** grading requirements in AASHTO MP 19.

Tack Coat

A tack coat of emulsified asphalt, RS-1, Item 409.15 shall be applied to any existing pavement at a rate of approximately 0.025 gal/yd², and on milled pavement approximately 0.05 gal/yd², prior to placing a new course. A fog coat of emulsified asphalt shall be applied between shim / intermediate course and the surface course, at a rate not to exceed 0.025 gal/yd².

Tack used between layers of pavement will be paid for at the contract unit price for Item 409.15 Bituminous Tack Coat.

SPECIAL PROVISION
SECTION 421
(Brick Pavers)

Description This work shall consist of construction of brick pavers for sidewalks, brick paver edging along sidewalks and concrete plaza as indicated and detailed on Drawings. Work includes furnishing all materials and construction of new brick pavement set on modified concrete sidewalk as base, or bituminous concrete base, including new dry sand cement setting bed, wet cement base for setting border brick, and applying joint filler material (dry sand-cement), including watering, compaction and sweeping or cleaning of brick pavers as needed. Contractor may substitute salvaged brick which has been removed, stockpiled, cleaned by contractor, and inspected and deemed suitable for reuse on project by Resident. Where reclaimed brick is used in any brick paver area they shall be uniformly blended with new brick pavers for a consistent appearance. Substitution of suitable cleaned salvaged brick pavers shall be provided at the same cost as for providing new bricks.

Construction Requirements This work shall consist of the construction of brick edging and setting of brick pavers on bituminous concrete or concrete base adjacent to concrete or bituminous concrete sidewalks, curbs and buildings. Pavers shall be firmly tamped and compacted in place to form a true and uniform surface without deviations in grade between adjacent pavers. Brick pavers and associated work does not include removal of the existing sidewalk or brick pavers, installation of concrete sidewalks and base, bituminous sidewalks and base, aggregate subbase gravel, or excavation.

Materials Materials for brick pavers shall meet the requirements specified in the following Subsection of Division 700 Materials

Brick for Paving	704.02

Materials for setting bed shall be Dry Mason Sand-Portland Cement (6:1 ratio)

Method of Measurement Brick paver edging and sidewalk areas will be measured by the square yard of finished surface.

Basis of Payment The accepted quantity of brick pavers will be paid for at the contract unit price per square yard for brick pavers complete in place. This payment shall be full compensation for but not limited to the following:

(1) Furnishing of new brick pavers and/or cleaning and recycling, of existing brick to be reused.

(2) Furnishing, leveling and compacting of Dry Sand-Cement (6:1 ratio) for base.

(3) Furnishing and placement wet cement base for setting border brick which is otherwise not supported by curbing, concrete sidewalk, foundations or edge rail restraint.

(4) Installation of new or re-used bricks to match existing sidewalk. All joints between new and old sidewalk to be staggered.

(5) Furnishing and applying joint filler material (dry sand-cement) and compacting with water and refilling until joint material is at the same surface as the bricks. All additional materials will be removed and disposed of properly.

(6) All necessary grading and restoration at the back edge of sidewalk is incidental.

Payment will be made under:

Pay Item		Pay Unit
421.3	Brick Pavers	Square Yard

SPECIAL PROVISION
SECTION 424
ASPHALT LOW MODULUS CRACK SEALER

Description This work shall consist of the furnishing and placement of crack sealing material in the cracks of existing bituminous concrete pavement in accordance with these Special Provisions. Placement shall consist of: 1) crack cleaning and drying, 2) material preparation and application, 3) material finishing and shaping and 4) barrier material and application.

Materials L ow modulus crack sealant material shall conform to ASTM D-3405 and the following specification.

Cone Penetration	90 - 150
Flow @ 60°C [140ºF]	< 3.0mm [⅛ in]
Bond, non-immersed	Three 12.7mm [½ in] specimens pass 3 cycles @ 200% extension @ -29°C [-20ºF]
Resilience, %	60 min
Asphalt Compatibility, ASTM D5329	pass*

* There shall be no failure in adhesion, formation of any oily exudate at the interface between the sealant and asphaltic concrete or other deleterious effects on the asphaltic concrete or sealant when tested at 60°C [140ºF].

The contractor shall provide the Resident or authorized representative with a copy of the material manufacturer's recommendations pertaining to heating, application, and reheating prior to the beginning of operations or the changing of materials.

CONSTRUCTION REQUIREMENTS

Weather Low Modulus Crack Sealer shall not be applied on a wet surface or when the atmospheric temperature is below 10°C [50°F] in a shaded area at the job site, or when weather conditions are otherwise unfavorable to proper construction procedures.

Equipment Equipment used in the performance of the work shall be subject to the Resident's or authorized representative's approval and shall be maintained in a satisfactory working condition at all times.

(a) Air Compressor: Air compressors shall be portable and capable of furnishing not less than 3 m^3 [4 yd^3] of air per minute at not less than 620 kPa [90 psi] pressure at the nozzle. The

compressor shall be equipped with traps that will maintain the compressed air free of oil and water.

(b) Sweeper: Manually operated, gas powered air-broom or self-propelled sweeper designed especially for use in cleaning pavements shall be used to remove debris, dirt, and dust from the cracks.

(c) Hot Air Lance: Should operate with propane and compressed air in combination at 1100°C - 1650°C [2000°F - 3000°F], exit air heated at 310 m/s [1000 ft/s]. The lance should draw propane from no smaller than a 45 Kg [100 lb] tank using separate hoses for propane and air draw. The hoses shall be wrapped together with reflectorized wrap to keep them together and to protect workers in low light situations.

(d) Hand Tools: Shall consist of V-shaped squeegee, brooms, shovels, metal bars with chisel shaped ends, and any other tools which may be satisfactorily used to accomplish this work.

(e) Melting Kettle: The unit used to melt the joint sealing compound shall be a double boiler, indirect fired type. The space between inner and outer shells shall be filled with a suitable heat transfer oil or substitute having a flash point of not less than 320°C [608°F]. The kettle shall be equipped with a satisfactory means of agitating and mixing the joint sealer at all times. This may be accomplished by continuous stirring with mechanically operated paddles and/or a continuous circulating gear pump attached to the heating unit. The kettle must be equipped with thermostatic control calibrated between 94°C [200°F] and 290°C [550°F].

(f) Application Wand: The application wand shall apply a controlled flow of material via an insulated or heated hose. The nozzle shall distribute the material as called for in this specification. A pressure regulator shall be provided to regulate pressure at the nozzle. A bypass line into the holding tank is required for use when the nozzle is shut off.

Preparation All cracks greater than 5 mm [¼ in] shall be blown free of loose material, dirt, vegetation, and other debris by high pressure air. Material removed from the crack shall be removed from the pavement surface by means of a power sweeper or appropriate hand tools as required. Cracks showing evidence of vegetation after being blown out shall be additionally cleaned by appropriate hand tools and additionally blown out. All cracks must be blown and heated via the hot air lance 10 minutes prior to the crack being sealed. Distance between the hot air lance and the crack sealing unit should be no more than 15 m [50 ft] to eliminate reinvasion of water, debris, and other incompressibles. All debris, vegetation, and water shall be removed to enhance adhesion of the crack sealing material. THIS WORK SHALL NOT BE DONE IN INCLEMENT WEATHER.

Preparation and Placement of Sealer The low modulus crack sealer material shall be heated and applied at the temperature specified by the manufacturer and approved by the Resident or authorized representative. Any material that has been heated above the manufacturer's specification shall not be used. Material that is reheated or held at temperature for an extended

period of time may be used as allowed by the manufacturer's specification and approval of the Resident or authorized representative. The Contractor shall provide the Resident or authorized representative with a suitable device for verifying the sealant temperature in the kettle and at the application site.

Any over application or spills are to be removed to the satisfaction of the Resident or authorized representative. Any sealed areas with damaged or contaminated sealer or visible voids are to be removed, prepared and resealed.

Sealer shall be delivered to the crack while the cracks are still hot from the hot air lance preparation through a pressure hose line and applicator shoe. The shoe width and the sealer overbanding area shall vary from 50 mm - 100 mm [2 in - 4 in] depending on the severity of the cracks. The applicator shall be followed by a V-shaped squeegee to minimize the thickness of the overband. Any loose material on the surface or in the crack, which may contaminate the crack sealer or impede bonding of the sealant to the pavement, is to be removed by hand tools prior to crack filling. No crack filling material shall be applied in a crack that is wet or where frost, snow, or ice is present. The ambient air temperature must be 10°C [50°F] or higher.

If the sealed area is to be opened to traffic immediately, a barrier material such as Glenzoil or an equivalent approved by the Resident shall be provided by the Contractor and shall be applied to the crack sealer to prevent pickup as directed by the Resident or authorized representative. **Areas which are designated by the Department to be overlaid shall have a cure time of 7 days.**

Quality of Work Excess of spilled sealer shall be removed from the pavement by approved methods and discarded. Any quality of Work determined to be below normal acceptable standards will not be accepted, and will be corrected and/or replaced as directed by the Resident or authorized representative.

Method of Measurement Asphalt Low Modulus Crack Sealer will be measured by the pound of sealant used. The manufacturer’s weights of the sealant will be accepted as the basis for measurement.

Basis of Payment. The accepted quantity of Low Modulus Crack Sealer will be paid for at the contract unit price per pound complete in place. This price shall be full compensation for furnishing and placing crack sealer, including cleaning cracks and furnishing and placing barrier materials if necessary.

Payment will be made under:

Pay Item	Pay Unit
424.3331 Asphalt Low Modulus Crack Sealer, Applied	Pound

SPECIAL PROVISIONS

SECTION 501
FOUNDATION PILES
(TIMBER PILES)

The following will be added to the Standard Specification:

501.101 Description. This work shall consist of furnishing, driving, fitting, and connecting timber piles, in accordance with the plans and specifications. This section supplements the pertinent requirements of Section 501 – Foundation Piles.

501.102 Plant Inspection. Timber piles shall be inspected by an independent commercial laboratory prior to delivery to the site. The laboratory shall be employed by the Contractor and approved by the Owner. The basis of the laboratory's approval shall be in conformance with Sections 3 and 4 of ASTM Standard E 329. The name, qualifications, and evidence of the laboratory's conformance with the above shall be submitted to the Engineer for approval.

501.103 Notice. The Engineer shall be given notice at least one day in advance of all pile driving.

501.104 Pile Driving Criteria and Testing. The Contractor shall submit a Wave Equation Analysis for each configuration of Pile Driving Equipment and each pile type. The Wave Equation Analysis shall demonstrate that excessive driving stresses will not occur and shall be used to establish initial driving criteria.

The Contractor shall perform Dynamic Pile Tests on two piles selected by the Engineer during the early phase of the pile driving operations. These tests shall be used to adjust the driving criteria, if necessary. Additional Dynamic Pile Tests shall be performed if ordered by the Engineer.

The Contractor is encouraged to view the following engineering reports prepared in part for the design of the timber pile foundations supporting the existing Riverwalk structures:

(1) *Report on Subsurface Investigation, Westbrook Riverfront* prepared by Haley & Aldrich, Inc. of South Portland, ME, dated May, 2001.

(2) *Report on Subsurface and Foundation Investigation, Westbrook Riverfront* prepared by Haley & Aldrich, Inc. of South Portland, ME, dated July, 2002.

(3) *Report on Subsurface Investigation, Additional Evaluation, Westbrook Riverfront* prepared by Haley & Aldrich, Inc. of South Portland, ME, dated December, 2002.

(4) *Report on Subsurface Investigation, Additional Evaluation, Westbrook Riverfront* prepared by Haley & Aldrich, Inc. of South Portland, ME, dated March, 2003.

MATERIALS

501.105 Materials. Timber piles shall meet the following requirements:

(1) Timber piles shall conform to ASTM D 25. The maximum butt diameter shall be 16 inches. Minimum butt diameter, 3 ft. from the butt, shall be 12 inches. Minimum tip diameter shall be 8 inches.

(2) Timber foundation piles for the timber pier shall be Southern Yellow Pine, clean- peeled, treated with chromated copper arsenate (CCA) in accordance with AWPA U1-10. CCA shall conform to AWPA P5. The retention of preservative shall not be less than 0.8 pounds per cubic foot of wood.

(3) Piles shall be of lengths shown on the Drawings and shall include an allowance for cut-off.

Timber pile appurtenances shall meet the following requirements:

(1) Bolts, nuts, and washers shall conform to ASTM A 307 and shall be hot-dip galvanized in accordance with ASTM A 153.

(2) Pile bands used for driving shall be cold rolled, fully heat treated, high tensile steel strapping not less than 1 1/4 inch wide and 0.031 inch thick and shall be painted and waxed.

(3) Pile tip shall be fitted with a metal driving boot or other means of protecting pile tip from obstructions encountered during driving. Submit shop drawings detailing proposed method of pile tip protections.

CONSTRUCTION REQUIREMENTS

All piles shall be driven in the locations shown within the tolerances hereinafter stated, and as shown on the plans. Piles shall be driven continuously to the elevations shown on the plans.

(1) Since steel beams are to be attached directly to the top of the piles, a template shall be used to maintain the location and vertical plumbness of the pile to within 2 inches of its intended center line. Maximum allowable variation from the vertical is ½ inch per ten feet of pile length.

(2) Due to the potential presence of obstructions in the fill, a heavy steel spud shall be driven through the fill at each pile location prior to inserting the pile to identify and overcome obstructions.

(3) All piles shall be driven to a minimum capacity of 25-tons, or refusal. Pile capacities are working (allowable) loads.

(4) The proposed piles are to be installed in close proximity to existing timber piles. The

Contractor shall make provisions to protect existing piles from displacement (heaving or lateral displacement) or damage during driving. The existing piles shall be monitored during pile driving. Any damage to the existing piles as a result of installation of new piles shall be repaired by the Contractor at no additional cost to the project. Acceptable means of preventing impact to existing piles include:

a. Installation of bracing , struts, or dead-men on existing piles prior to driving new piles;
b. Pre-augering of new piles;
c. Other method(s) approved by the Resident.

(5) Prior to installation of production piles, it is recommended that several piles be driven at different design locations to verify pile lengths.

(6) Tops of piles shall be protected, and caution used in driving to prevent splitting and crushing of the wood.

Piles shall be driven by an approved diesel, steam, or air-driven hammer. The hammer shall be in good condition and capable of operating in accordance with the manufacturer's rating.

(1) Piles shall be driven to refusal in bedrock with a hammer. The hammer furnished shall have a capacity at least equal to the hammer manufacturer's recommendation for the total weight of pile and character of subsurface material to be encountered. The rated driving energy of the hammer shall be a minimum of 10,000 foot-pounds per blow. Drive piles without interruption to a final average penetration resistance of five blows per inch for the last 6 inches of driving.

(2) Other types of hammers, such as ultrasonic, may be used if the Contractor obtains approval in writing prior to such use. A definite correlation between the proposed and specified hammers shall be submitted with the request.

(3) Piles shall be driven to achieve minimum ground penetration of 8’-0”. If this minimum penetration depth cannot be achieved, pile fixity at the pile tip shall be developed by other means and shall be submitted by the Contractor to be approved by the Engineer.

Water jetting of piles will be permitted only with the approval of the Engineer and when necessary to obtain the required penetration. The volume and pressure at the jet nozzle shall be sufficient to erode the material adjacent to the pile. The plant shall have a sufficient capacity to deliver at least 200 pounds per square inch at the jet nozzle. A water gauge and relief valve set at the required pressure shall be part of the equipment. Before the final depth is reached, the jet shall be withdrawn and the pile driven to secure the final penetration in a stratum not previously affected by the jet.

Obstructions encountered in pile locations shall be dealt with as follows:

(1) All rocks, timbers, pile stubs, or other obstructions at the ground surface (either above or under water) which interfere with driving of piles shall be removed at no additional

cost to the Owner.

(2) In the case of an apparent obstruction below the ground surface but above the anticipated full depth, which prevents appreciable penetration of a pile, the abnormal condition will receive further consideration by the Engineer. Depending on depth and the resistance of the obstruction, the Engineer will decide whether to consider the pile acceptable or order the obstruction removed. The decision may be deferred until the driving of adjacent piles indicated the obstruction to be isolated or extending over the area of several piles.

Care shall be taken in driving to avoid subjecting piles to excessive or undue stress. Any pile driven in the wrong position or damaged by reason of defects, or by driving, shall be withdrawn and replaced by a new pile, or supplemented by a second pile adjacent to the first. In either case, no payment shall be made for the unacceptable pile.

After driving, the heads of the piles (except as hereinafter specified) shall be cut-off at the correct elevation, with the cut made as indicated on the plans. Pile cut-offs shall become the property of the Contractor, to be removed from the site. A maximum cut-off allowance of four (4) linear feet per pile shall be permitted for each pile.

Care shall be taken in handling timber piles to prevent damage. Driving and fitting shall meet the following requirements:

(1) Piles shall be fitted as shown on the plans, after driving.

(2) Excessive manipulation of piles to force them into proper location will not be permitted.

Contractor shall maintain a complete and accurate record of each pile driven. Indicate pile location, deviations from design location, diameter, original length, mudline elevation, tip elevation, cutoff elevation, penetration in blows per foot for the last 10 feet, hammer data including rate of operation, make, and size, and unusual pile behavior or circumstances experienced during driving such as re-driving, heaving, weaving, obstructions, and unanticipated interruptions. Make pile driving records available to the Engineer at the job site, not less than 24 hours after each day of pile driving.

Method of Measurement Timber Piles shall be measured by the linear foot of installed and accepted pile, including the maximum cut-off allowance as described herein.

Basis of Payment Timber Piles shall be paid for at the contract price by the linear foot. Payment shall be full compensation for furnishing all labor, equipment and materials required to install piles as described herein, including additional means necessary to achieve pile tip fixity where minimum ground penetration requirement is not met. Payment will be made for in-place pile length as well as the cut-off portion up to the maximum allowance.

Payment will be made under:

Pay Item:		Pay Unit:
501.2	Timber Pile Treated	LF

SPECIAL PROVISION
SECTION 502
STRUCTURAL CONCRETE
(QC/QA Acceptance Methods)

CLASS OF CONCRETE	ITEM NUMBER	DESCRIPTION	P	METHOD
A	502.21	Structural Concrete, Abutments and Retaining Walls	$400	A
A	502.219	Structural Concrete, Abutments and Retaining Walls	$400	A
S	502.22	Structural Concrete, Abutments and Retaining Wall (Placed Underwater)	-	C
A	502.239	Structural Concrete Piers	$400	A
S	502.24	Structural Concrete Piers (Placed Under Water)	-	C
A	502.25	Structural Concrete Superstructure Slab	$400	A
A	502.31	Structural Concrete Approach Slab	$400	A
LP	502.49	Structural Concrete Curbs and Sidewalks	$425	A
A	502.341	Structural Concrete Roadway Median	$400	A
Fill	502.56	Concrete Fill	-	C
Per Special Provision	509.7	Composite Beam (Compression Reinforcement)	-	C
LP	526.34	Permanent Concrete Transition Barrier	$425	A

P values listed above reflect the price per cubic yard (yd^3) for all pay adjustment purposes.

May 5, 2010
Supersedes September 29, 2004

SPECIAL PROVISION
SECTION 502
STRUCTURAL CONCRETE
(Quality Level Analysis)

502.01 Description In second sentence, replace "…METHOD B Small Quantity Product Verification…" with "…METHOD B Statistical Acceptance…"

502.05 Composition and Proportioning Delete Table 1 and replace with the following;

TABLE 1- Methods A, B, and C

Concrete CLASS	Compressive Strength (PSI)		Permeability (COULOMBS)		Entrained Air (%)		Notes
	LSL	USL	LSL	USL	LSL	USL	
S	2,900	N/A	N/A	N/A	6.0	8.5	1, 5
A	4,350	-----	-----	2,400	6.0	8.5	1,2,5,6
P	-----	-----	-----	-----	5 ½	7 ½	1,2,3,4,5
LP	5,075	-----	-----	2,000	6.0	8.5	1,2,5,6
Fill	2,900	N/A	N/A	N/A	N/A	N/A	6

502.503 Delete and replace with the following;

"502.0503 Quality Assurance METHOD B The Department will determine the acceptability of the concrete through a quality assurance program.

The Department will take Quality Assurance samples a minimum of once per sublot on a statistically random basis. Quality Assurance tests will include compressive strength, air content and permeability.

Concrete sampling for quality assurance tests will be taken at the discharge point, with pumped concrete sampling taken at the discharge end of the pump line.

Lot Size A lot size shall consist of the total quantity represented by each class of concrete in the Contract, except in the case when the same class of concrete is paid for under both lump sum items and unit price items in the Contract; in this case, the lump sum item quantities shall comprise 1 lot and the unit price item quantities shall comprise a separate lot. A lot shall consist of a minimum of 3 and a maximum of 10 sublots. If a lot is comprised of more than 10 sublots, sized in accordance with Table #3, then this quantity shall be divided equally into 2, or more, lots such that there is a minimum of 3 and a maximum of 10 sublots per lot. If there is insufficient quantity in a lot to meet the recommended minimum sublot size, then the lot shall be divided into 3 equal sublots.

Sublot Size, General The size of each sublot shall be determined in accordance with Table #3. The Resident may vary sublot sizes based on placement sizes and sequence.

Sublot Size, Unit Price Items Sublot sizes will initially be determined from estimated quantities. When the actual final quantity of concrete is determined: If there is less than one-half the estimated sublot quantity in the remaining quantity, then this quantity shall be combined with the previous sublot, and no further Acceptance testing will be performed; if there is more than one-half the estimated sublot quantity in the remaining quantity, then this quantity shall constitute the last sublot and shall be represented by Acceptance test results. If it becomes apparent part way through a lot that, due to an underrun in quantity, there will be an insufficient quantity of concrete to comprise three sublots, then the Resident may adjust the sizes of the remaining sublots and select new sample locations based on the revised estimated quantity of concrete remaining in the lot.

Sublot Size, Lump Sum Items Each lot shall be divided into sublots of equal size, based on the estimated quantity of concrete.

TABLE 3

Quantity m^3 [cy]	Recommended Sublot Size m^3 [cy]
0-400 [0-500]	40 [50]
401-800 [501-1000]	60 [75]
801-1600 [1001-2000]	80 [100]
1601 [2001]or greater	200 [250]

Determination of the concrete cover over reinforcing steel for structural concrete shall be made prior to concrete being placed in the forms. Bar supports, chairs, slab bolsters, and side form spacers shall meet the requirements of Concrete Reinforcing Steel Institute (CRSI) Manual of Standard Practice, Chapter 3 Section 2.5 Class 1, Section 2.6 Class 1A, or Section 4. All supports shall meet the requirements for type and spacing as stated in the CRSI Manual of Standard Practice, Chapter 3. Concrete will not be placed until the placing of the reinforcing steel and supports have been approved by the Resident. If the Contractor fails to secure Department approval prior to placement, the Contractor's failure shall be cause for removal and replacement at the Contractor's expense. The Contractor shall notify the Resident, at least 48 hours prior to the placement, when the reinforcing steel will be ready for checking. Sufficient time must be allowed for the checking process and any needed repairs.

Evaluation of materials will be made using the specification limits in Table 1.

Compressive strength tests will be completed by the Department in accordance with AASHTO-T22 at ≥ 28 days, except that no slump will be taken. The average of two concrete cylinders per sublot will constitute a test result and this average will be used to determine the compressive strength for pay adjustment computations.

Testing for Entrained Air in concrete, at the rate of one test per sublot, shall be in accordance with AASHTO T152.

Rapid Chloride Permeability test specimens will be completed by the Resident in accordance with AASHTO T-277 at an age ≥ 56 days. Two 100 mm x 200 mm [4 in x 8 in] cylinders will be taken per sublot placed.

Surface Tolerance, Alignment and Trueness, Plumb and Batter, and Finish will be measured as described in Section 502.0502.

Rejection by Resident For an individual sublot with a calculated pay factor of less than 0.80, the Department will, at its sole discretion:

A. Require the Contractor to remove and replace the entire affected placement with concrete meeting the Contract requirements at no additional expense to the Department, or

B. Accept the material, at a reduced payment as determined by the Department. (See also Section 502.191)

For a lot in progress, the Contractor shall discontinue operations whenever one or more of the following occurs:

A. The pay factor for any property drops below 1.00 and the Contractor is taking no corrective action

B. The pay factor for any property is less than 0.90

C. The Contractor fails to follow the QC Plan"

502.18 Method of Measurement Under Section E. make the following change from "….Method A, and under Section 502.19…" to "…Method A, Section 502.0503- Quality Assurance Method B, and under Section 502.19…"

502.19 Basis of Payment Modify the first sentence of the seventh paragraph from "…accepted under Method A." to "…accepted under Method A and Method B."

502.191 Pay Adjustment for Compressive Strength Add the following as the second sentence to the first paragraph; "Pay factors (PF) for pay adjustments for compressive strength will be determined using the Quality Level Analysis as specified in Section 106."

502.192 Pay Adjustment for Chloride Permeability Delete and replace with the following;

"Pay factors (PF) for pay adjustments for Chloride Permeability will be determined using the Quality Level Analysis as specified in Section 106.

Values greater than 4000 coulombs shall be subject to rejection and replacement at no additional cost to the Department."

502.193 Pay Adjustment for Air Content Delete and replace with the following;

"Pay factors (PF) for pay adjustments for air content will be determined using the Quality Level Analysis as specified in Section 106."

Add the following Section;

"502.195 Pay Adjustments for Compressive Strength, Chloride Permeability and Air Content The Composite Pay Factor (CPF) for each lot of concrete shall be computed as follows:

CPF = [(Compressive Strength PF-1)(0.20)] + [(Air Content PF-1)(0.40)]
+ [(Chloride Permeability PF-1)(0.40)]

The pay adjustment for each lot of concrete shall be computed as follows:

Lot Pay Adjustment = P x CPF x Lot Size

There will be no positive pay adjustments for Method B Concrete."

SPECIAL PROVISION
SECTION 502
STRUCTURAL CONCRETE
(Roadway Median)

Description This work shall consist of furnishing and placing a Portland cement concrete pavement and incidental construction as shown on the Plans, or as directed by the Resident. Except as otherwise specified in this Special Provision, all work shall be in conformity with the applicable provisions of Section 502 - Structural Concrete, and Section 515 - Protective Coating for Concrete Surfaces.

MATERIALS

Concrete Concrete shall be Class A.

Reinforcing Steel Welded Steel Wire Fabric shall be 6” x 6” – W 1.4 x W 1.4 conforming to Section 503 and 709.02.

Epoxy coated reinforcing steel shall meet the requirements of Section 503 - Reinforcing Steel.

Galvanized reinforcing steel shall be hot-dipped galvanized with a Class I coating in accordance with ASTM A767. Nickel and aluminum shall be allowed in the galvanizing bath, but the zinc content shall not be less than 98 percent by mass. The Contractor shall furnish a written certification that the coating and coated bars meet the requirements of ASTM A767.

Control Joint Zip strip control joint shall be 1 ½ inch type as manufactured by Superior Featherweight Tool Company, 1325, Bixby Drive, City of Industry, CA 91745; Harris Plastic Control Joint Former 1 ½ inch type as manufactured by A.H. Harris & Sons, Inc., 21 Ellis Street, New Britain, CT 06050; or an equivalent.

Joint Sealant Per Section 714.04 - Sealant.

CONSTRUCTION REQUIREMENTS

Preparation of Foundation The foundation bed shall be well graded and compacted, as directed by the Resident, to provide the thickness of concrete indicated on the Plans.

Prior to the concrete placement, the foundation bed shall be thoroughly and uniformly saturated with water. The bed shall be free of puddles and excessive surface water.

Placement of Concrete The concrete mix shall be placed in a continuous placement operation when possible so that construction joints will be kept to a minimum. Construction joints shall be constructed when there is a break in a placement. Construction joints shall be used to provide access to driveways and roads as directed by the Resident. 2 ft long reinforcing bars spaced at 12 in on center shall be placed at the construction joint. Construction joints shall be brushed with a neat cement paste immediately prior to making the adjacent placement. Control joints shall be constructed with a zip strip placed transversely at 10 ft on centers.

Joint sealant shall be applied at the top surface of the concrete median at construction joints.

The surface of the concrete shall receive a float finish in accordance with Section 502.14(A) - Float Finish. Immediately following the float finish, the surface shall be textured at right angles to the roadway using an approved open-pile, stiff bristle broom or mat.

The curing period for the concrete shall be four days and shall meet the requirements of Section 502.15 - Curing Concrete. The finished surface of the concrete shall receive a protecting coating in accordance with Section 515 - Protective Coating for Concrete Surfaces.

Method of Measurement Structural concrete, roadway median, satisfactorily placed and accepted, will be measured for payment by the cubic yard, in accordance with the dimensions shown on the Plans or authorized by the Resident.

Basis of Payment The accepted quantity of Structural Concrete, Roadway Median will be paid for at the contract unit price per cubic yard, which payment will be full compensation for all labor, materials, equipment, and incidentals necessary to complete the work, including the fabrication, delivery, and placement of reinforcement; the furnishing and the application of the protective coating; furnishing and placement of control joint strip and sealant.

Excavation for the placement of the Structural Concrete, Roadway Median will be paid for under the appropriate contract pay item, Section 203 - Excavation and Embankments.

Payment will be made under:

Pay Item	Pay Unit
502.341 Structural Concrete, Roadway Median	Cubic Yard

SPECIAL PROVISION
SECTION 502
STRUCTURAL CONCRETE
(Fiber Reinforced Polymer Bridge Drains)

Description
This work shall consist of design, fabrication and delivery of bridge drains using FRP (Fiber Reinforced Polymer) composite materials in accordance with the plans and this specification.

Applicable Standards and References
The design and construction of FRP composite bridge drain components shall be in accordance with this Methods Specification and the relevant requirements of the following standards and specifications, unless otherwise stipulated in this specification. Standards and specifications specifically cited in the body of the specification establish requirements that shall have precedence over all others. Should the requirements in any reference conflict with those in another, the reference highest on the list shall govern. It is the Design-Builder's responsibility to obtain clarification of any unresolved ambiguity prior to proceeding with the design or construction.

Specifications

Work shall be done in general accordance with the following specifications:

a. AASHTO LRFD Guide Specifications for Design of Concrete-Filled FRP Tubes for Flexural and Axial Members, 2012.
b. American Composites Manufacturing Association, ACMA Code of Standard Practice, First Edition, 2011.
c. ISO/IEC Guide 58, Calibration and Testing Laboratory Accreditation Systems - General Requirements for Operation and Recognition.
d. ISO/IEC 17025 General Requirements for the Competence of testing and Calibration Laboratories.
e. NBS Voluntary Product Standard PS15-69. Custom Contact-Mold Reinforced Polyester Chemical-Resistant Process Equipment. The Society of the Plastics Industry, Inc., 355 Lexington Ave., N.Y., N.Y. 10017

2.3 Standards

A.) ASTM D 2584. *Standard Test Method for Ignition Loss of Cured Reinforced Resins.* American Society for Testing and Materials, West Conshohocken, PA.

B.) ASTM D 3039. *Standard Test Method for Tensile Properties of Polymer Matrix Composite Materials.* American Society for Testing and Materials, West Conshohocken, PA.

C.) ASTM D 3171. *Standard Test Methods for Constituent Content of Composite Materials.* American Society for Testing and Materials, West Conshohocken, PA.

D.) ASTM D 4385. *Standard Practice for Classifying Visual Defects in Thermosetting Reinforced Plastic Pultruded Products.* American Society for Testing and Materials, West Conshohocken, PA.

E.) ASTM D 570. *Test Method for Water Absorption of Plastics.* American Society for Testing and Materials, West Conshohocken, PA.

F.) ASTM E 1356. *Standard Test Method for Assignment of the Glass Transition Temperatures by Differential Scanning Calorimetry.* American Society for Testing and Materials, West Conshohocken, PA.

G.) ASTM E 1640. *Standard Test Method for Assignment of the Glass Transition Temperature by Dynamic Mechanical Analysis.* American Society for Testing and Materials, West Conshohocken, PA.

H.) ASTM C 582. Standard Specification for Contact-Mold Reinforced Thermosetting Plastic (RTP) Laminates for Corrosion-Resistant Equipment. American Society for Testing and Materials, West Conshohocken, PA.

Material

Materials shall conform to the following requirements:

1. FRP composite drain and pipe material shall meet the requirements of Appendix A.

2. All material and workmanship will meet or exceed the requirements of ASTM.

Construction Requirements

FRP Drain Manufacturers

The FRP bridge drains shall be supplied by one of the following companies:

1. Kenway Corporation
2. FRP Bridge Drain Pipe-Westfall Company
3. ACO USA

The above suppliers have been pre-certified by providing materials samples that have been tested in accordance with appendix B. Other suppliers/manufacturers may become certified if FRP bridge drain samples are tested in accordance with the requirements in Appendix B along with the meeting the following requirements.

All manufactures or fabricators of FRP bridge drain systems/components are required to have a minimum of 3 years of experience in providing FRP composite structural grade products to the general market. Manufacturers need to provide documentation that personnel involved in manufacture/fabrication hold and maintain American Composites Manufactures Association (ACMA) certifications in a minimum of two of the following disciplines; 1) Open Molding, 2) Corrosion, 3) Vacuum Infusion, 4) Closed Molding and that the Manufacturer/Fabricator have an ISO 9001:(current year) or other independent certification to ensure that the Manufacturer's process has been independently audited for conformance.

Design Guide for FRP Composite Scupper Bodies/Drain Inlets

General

The bridge shall use a size F offset FRP composite scupper (36 inch long x 12 inch wide x 10 diameter downspout) See appendix B for additional details. The bottom of the downspout shall extend a minimum of 6 inches below the bottom of the beams with a maximum of 12 inches below the bottom of the beams.

Deck/interface drain holes.

Drain holes are required on both sides of the scupper to capture moisture at the interface between the top of the deck and bottom of the asphalt pavement. Three holes one half inch in diameter spaced at 6 inches on center and three and one quarter inches on center below the top of the grate, or pavement thickness, shall be placed on both sides of the scupper. If the holes are created after the molding process by punching, drilling or other mechanical means the holes shall be sealed using a compatible epoxy compound.

Grates

Grates shall be bicycle friendly and designed for HL-93 Live Load unless otherwise specified. Any gaps in grates shall have a maximum clear width of two inches. The minimum clear opening size in any grating shall be 1 1/8” by 1 1/8“. Grates shall be galvanized steel (ASTM A123) or FRP specifically designed and meeting the HL-93 Live Load requirements.

- Steel grating shall be commercial heavy - duty grating with 1 1/2" x 5/16" bearing bars spaced at 2 3/8” and 3/8" diameter cross bars spaced at 2”. The grating shall be centered in the drain top. The bearing bars shall run parallel to traffic.
- FRP grating if used shall provide an opening area at least 75% of steel grating noted above. FRP gratings that do not meet this requirement are not acceptable and shall not be used.

Grates shall be designed so that they can be removed by mechanical means. Fasteners for grates shall be stainless. Where selected grates require orientation to flow, the grates will have orienting features included as required, i.e. for orders of paired drains one drain would have left hand orientation and the other right hand orientation.

Grate Frames
Grate frames may be either integrated FRP composite or of galvanized steel construction attached to the scupper/inlet body in a matter consistent with the physical design parameters.

Anchoring provisions
Scupper/inlet anchoring shall be bonded to the grate framing in a manner that provides a load path into the concrete decking. Anchor details to be specified as part of the shop drawings for the bridge drains.

Cross and Longitudinal Slope Compensation
The scupper/inlet designs shall provide a means to match the grate to the deck angles while maintaining the downspout in a plumb orientation. If purchased in pairs one left handed version will be required for each right handed version. This may be achieved when a down spout portion is bonded to the scupper body, through the frame attachment to the scupper body.

FRP Composite Drain Sections
Bridge deck downspouts, bridge drain deck extensions, elbows and pipe for under drains shall be constructed using a circular cross section; however other cross sections are allowed with approval of the Fabrication Engineer. Drain sections shall comply with the material requirements set forth in Appendix A and maintain wall thickness of no less than 1/4 inch.

FRP Composite Deck Drain Extensions.
Down spout drain extensions be integrated and bonded directly to the scupper bodies.

Transitions through Connections and Components.
All transitions and joints to be manufactured through the use of smooth radius molds. Miter joint and edged transitions are not allowed. All internal joint connections are to be smooth and continuous.

Pigmented FRP Composite Drain Components
Pipes, fittings, bodies and all FRP composite drain system components shall be pigmented through the wall. The color used shall match the color of the Hillman composite beams. Paint, gel-coat or any other exterior coating shall not be accepted.

Joint Connections
Joints may be welded using manufacturer recommended adhesives in accordance to the adhesive manufacturer's application procedures. Adhesives must be compatible with the FRP resins, applied in a way that ensures complete bonding and liquid tight sealing of the resins, and be compatible with the environmental conditions such as temperature, freeze thaw conditions, and wet alkaline environments.

Shop Drawings/Inspection

Drawings The Contractor shall prepare shop detail, erection and other necessary working drawings in accordance with Section 105.7 - Working Drawings. Drawings shall include dimensions and tolerances necessary for manufacture and installation, all hardware, orienting features, anchor details, fastener details, gasket details, cross and longitudinal matching features, joint details, transition details, material lay-up/composition

Quality Control/Quality Assurance: Within 30 calendar days the Contractor shall submit to the Department a Quality Control Quality Assurance (QCQA) Plan for fabrication of the HCB's. Fabrication of HCB's shall not commence until the QCQA Plan has been reviewed and approved by the Department.

Notice of Beginning Work The Contractor shall give the Fabrication Engineer a minimum of two weeks notice before the beginning of work. No work shall be performed before the Fabrication Engineer has been notified. Before beginning work, a pre-fabrication meeting may be held at the discretion of the Fabrication Engineer or, if requested, by the Contractor.

The Contractor shall advise the Fabrication Engineer of the production schedule and any changes to it. If the Contractor suspends work on a project, the Fabrication Engineer will require 48 hours notice prior to the resumption of work.

Inspection Quality Control (Q.C.) is the responsibility of the Contractor. The Quality Control Inspector (Q.C.I.) shall inspect all aspects of the work and shall supervise all nondestructive examination (NDE). The Q.C.I. shall record measurements and test results in a clear and legible manner. The Q.C.I. shall reject materials and workmanship that do not meet contract requirements. The Contractor may perform NDE in addition to the minimum required. The results of all measurements and testing shall be made available to the Quality Assurance Inspector (Q.A.I.).

Quality Assurance (Q.A.) is the prerogative of the Fabrication Engineer. The Q.A.I. will ensure that the Q.C. Department is performing properly, verify documentation, periodically inspect workmanship and witness NDE. Q.A. testing deemed necessary by the Fabrication Engineer in addition to the minimum testing requirements shall be scheduled to minimize interference with the production schedule.

Inspector's Authority The Q.A.I. will have the authority to reject material or workmanship that does not meet the contract requirements. The acceptance of material or workmanship by the Q.A.I. will not prevent subsequent rejection, if found unacceptable.

Rejections Rejected material and workmanship shall be corrected or replaced by the Contractor.

Bill of Materials The Contractor shall provide the Fabrication Engineer with copies of all bills of materials used in the fabrication of the FRP bridge drains.

Packaging, Storage and Shipping of Components
FRP drains shall be stored and handled in accordance with the manufacturer's recommendation. The drains shall be stored above the ground not be allowed to come into contact with seawater, mud, grease, dirt or other deleterious materials that may be present on the job site.

Installation
The Contractor shall install the FRP drains in accordance to the manufacturer's installation procedures and in accordance to the Contractor's installation drawings. FRP bridge drains will be accurately placed at the locations shown on the Plans or as authorized by the Resident. Adequate means shall be provided for securely holding the drains in place during placement of concrete. Any damaged drain shall be repaired or replaced at the Resident's discretion and at no additional cost to the Department.

Method of Measurement
FRP Bridge Drains will be measured by the number of units, for fabrication and delivery. Installation for the drains will be incidental to the Structural Concrete Superstructure item.

Basis of Payment
FRP Bridge Drains will be paid for at the contract unit price. Such payment will include compensation for the fabrication and delivery of the drains in accordance with this specification.

Payment will be under:

Pay Item		Pay Unit
502.72	FRP Bridge Drain –Type A	Each

SPECIAL PROVISION
SECTION 502
STRUCTURAL CONCRETE
(Fiber Reinforced Polymer Bridge Drains)

APPENDIX A

A.1 Scope
This section specifies the material composition, properties, test requirements and reports that shall be submitted and approved prior to and after product certification of each FRP composite drain component type, e.g. scupper body or pipe component. The manufacturer is responsible for testing using an approved independent lab per section A.5.3. Once certified the approved product may be manufactured with only internal testing provided the manufacturing process and laminate composition do not change. Changes to process and or composition do require additional testing and product certification. The manufacturer shall report the individual test results per section A.5.3. If the strength is less than the required properties certification will not be granted.

A.2 Material/Laminate Composition

A.2.1 Fibers
Fiber sizings and coupling agents shall be compatible with the resin system used to impregnate them.

A.2.2 Matrix Resins
Commercial grades of vinyl ester and epoxy resin systems are permitted provided the finished product meets the material property requirements before and after durability conditioning as set forth in Section A. Styrene is permitted to be added to the polymer resin during processing. Added styrene shall be less than 10 percent by mass of the polymer resin. The amount of styrene, as a mass percentage of the polymer resin, added during processing shall be reported per Section A.5.3.

A.2.3 Fillers and Additives
Commercial grade inorganic fillers such as kaolin clay, calcium carbonate, and alumina tri-hydrate shall not exceed 20 percent by mass of the polymer resin constituent. Commercial grade additives and process-aids, such as release agents, low profile shrink additives, initiators, promoters, hardeners, catalysts, pigments, fire-retardants, and ultra-violet inhibitors are permitted and depend on the processing method. Shrink additives, if used, shall be less than 20 percent by mass of the polymer resin. Commercial grade inorganic or organic non-woven surfacing mats or veils are permitted.

A.2.4 Fiber Content

Fiber content shall be measured by ASTM D 3171 or ASTM D 2584. Fiber content shall be high enough to meet the mechanical property requirements of the FRP system laminate. The manufacturer shall report the fiber content of the end product by volume or by mass in accordance to the method used. If fiber content is not provided by the manufacturer, then the manufacturer shall provide material data sheets with the weight per unit area of the fiber reinforcement used to manufacture the part.

A.2.5 Glass Transition Temperature

The characteristic value of the glass transition temperature of the composite system, determined in accordance with ASTM E1640, shall be at least 40 degrees Fahrenheit higher than the maximum design temperature, $T_{MaxDesign}$, defined in section 3.12.2.2 of the AASHTO LRFD Guide Specifications for Design of Concrete-Filled FRP Tubes for Flexural and Axial Members, 2012. FRP drain systems may not be used in environments with a service temperature higher than the glass transition temperature of the resin used for their manufacturing.

A.2.6 Longitudinal and Transverse Coefficients of Thermal Expansion (CTE)

The coefficient of Thermal Expansion (CTE) of the tube may vary in the longitudinal and circumferential directions of the component depending on the laminate architecture and type of fibers and resins.

A.3 Mechanical Properties

A.3.1 Tensile Properties

The tensile strength, tensile modulus of elasticity, and ultimate tensile strain shall be determined for both the axial and hoop directions of the tubular components or in transverse and longitudinal directions of inlet bodies, see Section A.5.1 Test Samples. The tensile strength as reported by the manufacturer for product certification shall be measured according to ASTM Test Method D 3039, or other tension test method designed to determine tensile properties of composite laminates at the approved frequency and number of specimens as specified in section A.5.

A.3.4 Compressive Properties

The compressive strength and ultimate compressive strain shall be determined for the longitudinal directions of the tube laminate. The compressive strength and ultimate compressive strains shall be derived from specimens tested in accordance with ASTM Test Method D 6641, or other approved compression test method designed to determine compressive properties of the composite.

A.4 Durability Properties

Material properties shall retain 85% of their baseline values for the material properties listed in Section 2.3 after conditioning for all the durability tests listed below. Durability test methods are adopted from AASHTO Guide Specifications for Design of Bonded FRP Systems for Repair and Strengthening of Concrete Bridge Elements.

Durability property testing is only required for initial product certification and not required for subsequent production orders. The testing is the responsibility of the manufacturer and shall be conducted by an approved independent testing lab per section A.5.2.

A.4.1 Moisture Absorption
Samples will be immersed in distilled water having a temperature of 100 +/-3 degrees Fahrenheit and tested after 1,000 hours of exposure.

A.4.2 Resistance to Alkaline Environment
Samples will be immersed in a saturated solution of calcium hydroxide (pH-11) at ambient temperature of 73 +/-3 degrees Fahrenheit for 1,000 hours prior to testing. The pH level will be monitored and the solution will be maintained as needed.

A.4.3 Alternating Ultraviolet Light and Condensation Humidity
Samples will be conditioned in an apparatus under Cycle I-UV exposure condition according to ASTM G154 Standard Practice. Samples will be tested within two hours after removal from the apparatus.

A.4.4 Freeze-Thaw
Samples will be exposed to 100 repeated cycles of freezing and thawing in an apparatus meeting the requirements of ASTM C666.

A.5 Sampling, Testing & Results.

A.5.1 Test Samples.
The manufacturer is responsible for testing and may use samples in accordance to the test methods and needs of test equipment available. Test coupons may be cut from manufactured products or prepared using identical processes e.g. wet lay-up, vacuum infusion, etc. in a flat sheet, or witness plate, in which test coupons may be cut. Approval of the Fabrication Engineer shall be required for acceptance of test specimens produced by a different manufacturing method. Samples derived from special coupon test sheets shall be taken interior to edge sections 1.5x the width of the required coupon width. Samples shall be prepared from samples oriented with the directions illustrated in figures 1 and 2 for scupper body and drain pipes. For samples from filament wound pipes, samples shall be constructed over polygon mandrels allowing for flat panels to be removed for test purposes. Each test shall use a quantity of three samples. See Tables A.5.4 for tests, material requirements and sample breakdown.

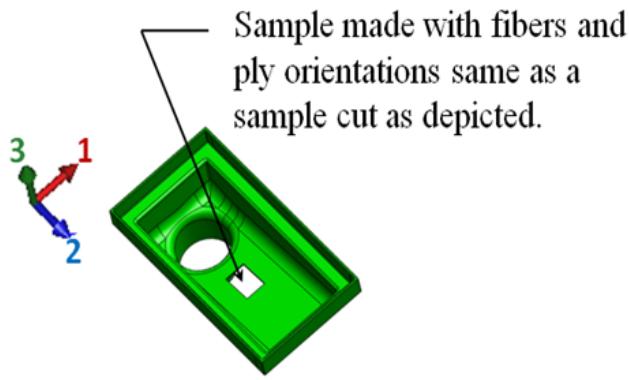

Figure 1.) Scupper Body Sample Orientations.

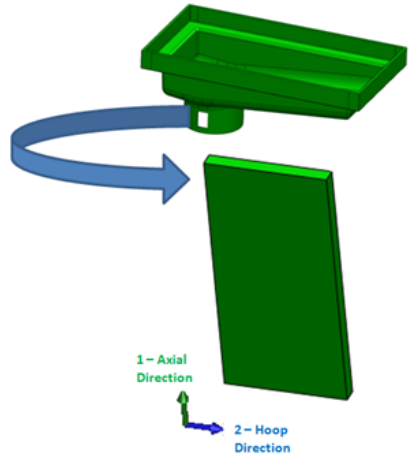

Figure 2.) Drain Pipe Sample Orientations.

A.5.2 Test Lab Requirements.
All testing of FRP material properties is being conducting in accordance to specified standards. Internal or external testing is to be conducted through laboratory facilities in accordance to ISO/IEC Guide 58, *Calibration and Testing Laboratory Accreditation Systems - General Requirements for Operation and Recognition* and ISO/IEC 17025 *General Requirements for the Competence of testing and Calibration Laboratories* as related by AASHTO document R18 "Recommended Practice for Establishing and Implementing a Quality System for Construction Materials Testing Laboratories."

A.5.3 Production Validation (PV) Testing.
Certification of materials used in FRP drain products must undergo PV testing of the specified material properties before and after environmental conditioning as set forth in Section A.5.4 by an independent lab. PV tests may be conducted internally by the manufacturer for development but are not acceptable for certification. Reported values for the material composition is be recorded and reported by the manufacturer, no independent audit is required.

A.5.4 Production Validation Sample Quantities, Minimum Material Properties and Reported Values
The following data shall be reported for material certification. Note that the tables shown use orientations related to FRP scupper or inlet bodies as set forth in Figure 1 of Section A.5.1, orientation direction 2 as shown in Figure 2 of Section A.5.1 shall be substituted for orientation direction 3 when evaluating tubular sections. The required number of samples have been reduced from ASTM requirements.

Table A.5.4.a PV reported material composition data. (Recorded by the manufacturer during the manufacturing process)

Section No.	Characteristic	Applicable Test Standard	Number of Samples	Tolerance	Reported
A.2.2	Styrene, mass percentage of polymer resin	per tolerance	N/A	10% max	
A.2.3	Inorganic fillers, mass percentage of polymer resin.	per tolerance	N/A	20% max	
	Shrink additives, mass percentage of polymer resin.	per tolerance	N/A	20% max	
A.2.4	Fiber Content	ASTM D3171 or ASTM D2584	3	Sufficient to meet mechanical properties	
A.2.5	Glass Transition Temperature	ASTM E1640	3	> Max Design Temperature	

Table A.5.4.b PV Reported Baseline Mechanical Properties

(Conducted by an independent laboratory. Samples as Manufactured w/o additional conditioning per Section A.3)

						Independent Lab Reported Values			
Section No.	Direction	Characteristic	Applicable Test Standard	No. of Samples	Minumum Allowable Values	Sample 1	Sample 2	Sample 3	Avg Value
A.3.1	1	Tensile Strength	ASTM D3039	3	10000 (psi)				
		Tensile Modulas of Elasticity			800000 (psi)				
		Ultimate Tensile Strain			0.003 in/ in				
	2	Tensile Strength		3	10000 (psi)				
		Tensile Modulas of Elasticity			800000 (psi)				
		Ultimate Tensile Strain			0.003 in/ in				
A.3.4	1	Compressive Strength	ASTM D6641	3	22000 (psi)				
		Ultimate Compressive Strain			0.003 in/ in				
	3	Compressive Strength		3	22000 (psi)				
		Ultimate Compressive Strain			0.003 in/ in				

Table A.5.4c PV Reported Mechanical Properties after 1000 hr. Moisture Immersion Condidtioning per Section A.4.1

(Conducted by an independent laboratory)

						Independent Lab Reported Values			
Section No.	Direction	Characteristic	Applicable Test Standard	No. of Samples	Minumum Allowable Values	Sample 1	Sample 2	Sample 3	Avg Value
A.3.1	1	Tensile Strength	ASTM D3039	3	8500 (psi)				
		Tensile Modulas of Elasticity			680000 (psi)				
		Ultimate Tensile Strain			0.0025 in/in				
	2	Tensile Strength		3	8500 (psi)				
		Tensile Modulas of Elasticity			680000 (psi)				
		Ultimate Tensile Strain			0.0025 in/in				
A.3.4	1	Compressive Strength	ASTM D6641	3	18700 (psi)				
		Ultimate Compressive Strain			0.0025 in/in				
	3	Compressive Strength		3	18700 (psi)				
		Ultimate Compressive Strain			0.0025 in/in				

Table A.5.4d PV Reported Mechanical Properties after 1000 hr. of Alkaline Environment Conditioning per Section A.4.2

(Conducted by an independent laboratory)

						Independent Lab Reported Values			
Section No.	Direction	Characteristic	Applicable Test Standard	No. of Samples	Minumum Allowable Values	Sample 1	Sample 2	Sample 3	Avg Value
A.3.1	1	Tensile Strength	ASTM D3039	3	8500 (psi)				
		Tensile Modulas of Elasticity			680000 (psi)				
		Ultimate Tensile Strain			0.0025 in/in				
	2	Tensile Strength		3	8500 (psi)				
		Tensile Modulas of Elasticity			680000 (psi)				
		Ultimate Tensile Strain			0.0025 in/in				
A.3.4	1	Compressive Strength	ASTM D6641	3	18700 (psi)				
		Ultimate Compressive Strain			0.0025 in/in				
	3	Compressive Strength		3	18700 (psi)				
		Ultimate Compressive Strain			0.0025 in/in				

Table A.5.4e PV Reported Mechanical Properties after UV Light Conditioning per Section A.4.3 (ASTM G154).
(Conducted by an independent laboratory)

Section No.	Direction	Characteristic	Applicable Test Standard	No. of Samples	Minumum Allowable Values	Independent Lab Reported Values: Sample 1	Sample 2	Sample 3	Avg Value
A.3.1	1	Tensile Strength	ASTM D3039	3	8500 (psi)				
		Tensile Modulas of Elasticity			680000 (psi)				
		Ultimate Tensile Strain			0.0025 in/in				
	2	Tensile Strength		3	8500 (psi)				
		Tensile Modulas of Elasticity			680000 (psi)				
		Ultimate Tensile Strain			0.0025 in/in				
A.3.4	1	Compressive Strength	ASTM D6641	3	18700 (psi)				
		Ultimate Compressive Strain			0.0025 in/in				
	3	Compressive Strength		3	18700 (psi)				
		Ultimate Compressive Strain			0.0025 in/in				

Table A.5.4f PV Reported Mechanical Properties after 100 Freeze-Thaw Cycle Conditioning per Section A.4.4 (ASTM C666).
(Conducted by an independent laboratory)

Section No.	Direction	Characteristic	Applicable Test Standard	No. of Samples	Minumum Allowable Values	Independent Lab Reported Values: Sample 1	Sample 2	Sample 3	Avg Value
A.3.1	1	Tensile Strength	ASTM D3039	3	8500 (psi)				
		Tensile Modulas of Elasticity			680000 (psi)				
		Ultimate Tensile Strain			0.0025 in/in				
	2	Tensile Strength		3	8500 (psi)				
		Tensile Modulas of Elasticity			680000 (psi)				
		Ultimate Tensile Strain			0.0025 in/in				
A.3.4	1	Compressive Strength	ASTM D6641	3	18700 (psi)				
		Ultimate Compressive Strain			0.0025 in/in				
	3	Compressive Strength		3	18700 (psi)				
		Ultimate Compressive Strain			0.0025 in/in				

Table B2 Preferred Offset FRP Composite Scupper Bodies

	Size Designation	D	E	F	G		
	Size Dimensions (Grate Length x Width, Down Spout Diameter)	24x12xØ8	30x12xØ10	36x12xØ10	42x12xØ12		
Dimension		Nominal Dimensions				Nominal Design Tolerance	Manufacturing Tolerance
Number	**Name**						
1	Down Spout Inner Diameter	8"	10"	10"	12"	min	+/- 0.015"
2	Grate Frame Width	12"	12"	12"	12"	+ 2"/-0"	+/- 0.025"
3	Grate Frame Height	As required to contain grate and recessed from deck surface					
4	Grate Frame Flange & Wall Thickness	0.25"	0.25"	0.25"	0.25"	min	+/- 0.025"
5	Scupper Toe Depth	4"	4"	4"	4"	+1"/-0"	+/- 0.1"
6	Scupper Toe Slope	1:10	1:10	1:10	1:10	min	+ 1 degree
7	Scupper Body Radii	2"	2"	2"	2"	min	+0.1"
8	Down Spout Position to Heel	6"	6"	6"	6"	+/- 0.5"	
9	Height	13.5"	16"	18"	18"	Open	+/- 0.25"
10	Scupper Heel Slope	1:10	1:10	1:10	1:10	min	+0.1"
11	Grate Frame Length	24"	30"	36"	42"	+ 2"/-0"	+/- 0.025"
12	Scupper and Down Spout Wall Thickness	0.25"	0.25"	0.25"	0.25"	min	+0.015"

SPECIAL PROVISION
SECTION 502
STRUCTURAL CONCRETE
(Fiber Reinforced Polymer Bridge Drains)
Standard Details
APPENDIX B

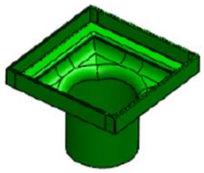

Bridge Drain – Symmetric Inlet

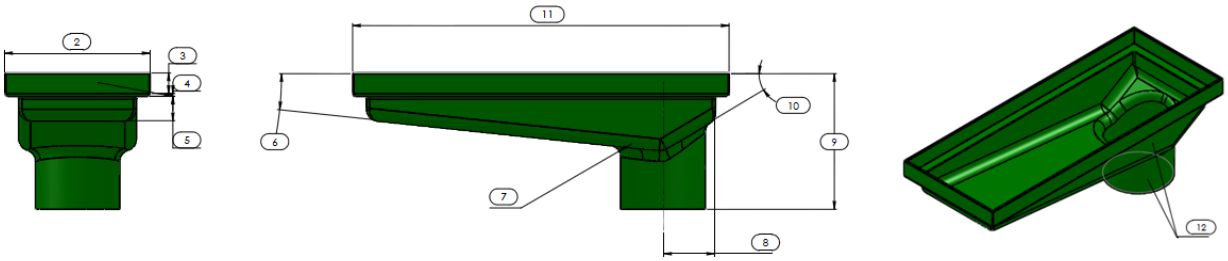

Table B1 Preferred Symmetric FRP Composite Inlet Bodies

	Size Designation	A	B	C		
	Size Dimensions (Grate Length x Width, Down Spout Diameter)	12x12xØ8	14x14xØ10	18x18xØ12		
Dimension		Nominal Dimensions			Nominal Design Tolerance	Manufacturing Tolerance
Number	Name					
1	Down Spout Inner Diameter	8"	10"	12"	min	+/- 0.015"
2	Grate Frame Width	12"	14"	18"	+/- 1"	+/- 0.025"
3	Grate Frame Height	As required to contain grate and recessed from deck surface				
4	Grate Frame Flange & Wall Thickness	0.25"	0.25"	0.25"	min	+/- 0.025"
5	Scupper Toe Depth	4"	4"	4"	+1"/-0"	+/- 0.1"
6	Scupper Toe Slope	1:10	1:10	1:10	min	+ 1 degree
7	Scupper Body Radii	2"	2"	2"	min	+0.1"
8	Down Spout Position to Heel	6"	6"	6"	+/- 0.5"	
9	Height	18"	18"	18"	Open	+/- 0.25"
10	Scupper Heel Slope	1:10	1:10	1:10	min	+0.1"
11	Grate Frame Length	12"	14"	18"	+/- 1"	+/- 0.025"
12	Scupper and Down Spout Wall Thickness	0.25"	0.25"	0.25"	min	+0.015"

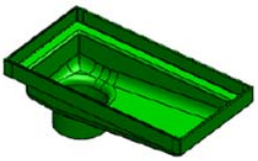

Bridge Drain-Offset Scupper

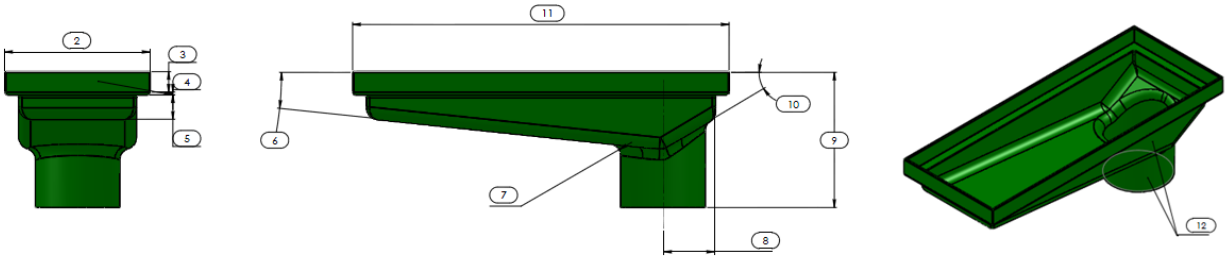

Table B2 Preferred Offset FRP Composite Scupper Bodies

	Size Designation	D	E	F	G		
	Size Dimensions (Grate Length x Width, Down Spout Diameter)	24x12xØ8	30x12xØ10	36x12xØ10	42x12xØ12		
Dimension		Nominal Dimensions				Nominal Design Tolerance	Manufacturing Tolerance
Number	Name						
1	Down Spout Inner Diameter	8"	10"	10"	12"	min	+/- 0.015"
2	Grate Frame Width	12"	12"	12"	12"	+ 2"/-0"	+/- 0.025"
3	Grate Frame Height	As required to contain grate and recessed from deck surface					
4	Grate Frame Flange & Wall Thickness	0.25"	0.25"	0.25"	0.25"	min	+/- 0.025"
5	Scupper Toe Depth	4"	4"	4"	4"	+1"/-0"	+/- 0.1"
6	Scupper Toe Slope	1:10	1:10	1:10	1:10	min	+ 1 degree
7	Scupper Body Radii	2"	2"	2"	2"	min	+0.1"
8	Down Spout Position to Heel	6"	6"	6"	6"	+/- 0.5"	
9	Height	13.5"	16"	18"	18"	Open	+/- 0.25"
10	Scupper Heel Slope	1:10	1:10	1:10	1:10	min	+0.1"
11	Grate Frame Length	24"	30"	36"	42"	+ 2"/-0"	+/- 0.025"
12	Scupper and Down Spout Wall Thickness	0.25"	0.25"	0.25"	0.25"	min	+0.015"

SPECIAL PROVISION
SECTION 503
REINFORCING STEEL
(Corrosion Resistant Reinforcing)

503.01 Description: This section shall be replaced in its entirety by the following:

This work shall consist of furnishing and placing of corrosion resistant reinforcement in accordance with these specifications and in conformance with the Plans, Supplemental Specifications and Special Provisions.

503.02 Materials: This section has been amended to include:

All Corrosion Resistant Reinforcing shall meet the requirements of ASTM A1055/A1055M – 10e1, Zinc and Epoxy Dual – Coated Steel Reinforcing Bars.

Section X1 Guidelines for Job – Site Practices of ASTM A1055/A1055M – 10e1, Zinc and Epoxy Dual – Coated Steel Reinforcing Bars shall apply.

Surface preparation and patching of field – cut, dual – coated reinforcing bar ends shall conform to X1.3.12 of ASTM A1055/A1055M – 10e1, Zinc and Epoxy Dual – Coated steel Reinforcing Bars.

503.10 Method of Measurement: This section has been amended to include:

Corrosion Resistant Reinforcing will be measured by the Pound for fabrication, delivery and placing.

503.11 Basis of Payment: This section has been amended to include:

The accepted quantity of Corrosion Resistant Reinforcing will be paid for at the contract unit price per Pound. Payment shall include all materials, equipment and labor required for the fabrication, delivery and placing of the Corrosion Resistant Reinforcing.

Payment will be made under:

Pay Item		Pay Unit
503.30	Corrosion Resistant Reinf. System, Fab. & Del.	LB
503.31	Corrosion Resistant Reinf. System, Placing	LB

SECTION 506 - SHOP APPLIED PROTECTIVE COATING - STEEL

506.01 Description This work shall consist of applying protective coating to steel substrate in accordance with the Plans and this Specification. The protective coating system shall be as specified on the Plans.

ALL REQUIREMENTS IN THIS SPECIFICATION ARE THE RESPONSIBILITY OF THE CONTRACTOR UNLESS NOTED OTHERWISE.

506.02 Materials Materials shall comply with the requirements of the respective Subsections of this Specification.

506.03 Submittals Submit the following, as applicable:

A. The manufacturer's product data sheet for the specified protective coating system(s).
B. Material Safety Data Sheets.
C. Facility Certification, Endorsement or other Qualification(s)
D. Quality Control Plan
E. Quality Control Inspector (QCI) qualifications

506.04 General Specifications Specifications for the protective coating and/or protective coating systems are:

Zinc Rich Coating System	Subsections 506.10 through 506.19
Hot-Dip Galvanizing	Subsections 506.20 through 506.29
Duplex - Powder Coating over Galvanizing	Subsections 506.30 through 506.46
Duplex - Epoxy Paint over Galvanizing	Subsections 506.46 through 506.57

506.05 Inspection Quality Control (QC) is the responsibility of the Contractor. Inspect all aspects of the work and supervise all sampling, measurements and testing. Record measurements and test results in a clear and legible manner in a format acceptable to the Fabrication Engineer. Reject materials and workmanship that do not meet Contract requirements. The QCI may perform sampling, measurements and testing in addition to the minimum required. Make the results of all sampling, measurements and testing available to the Quality Assurance Inspector (QAI).

Training in surface preparation, coatings application, and inspection is required for QCI's. Acceptable training includes one or more of the following:

A. National Association of Corrosion Engineers (NACE) International: Coating Inspector Program Level 1 (minimum)

B. SSPC BCI Coatings Inspection Training and Certification for the Bridge Industry: (Level I without certification), or Level II
C. Other training that is acceptable to the Department.

Quality Assurance (QA) is the prerogative of the Department. The QAI's responsibility is to ensure that the QC personnel are performing acceptably, verify documentation, periodically inspect workmanship and witness sampling, measurements and testing. The QAI will schedule measurements and testing deemed necessary by the Resident in addition to the minimum requirements in a manner that minimizes interference with the production schedule.

The QAI has the authority to reject material or workmanship that does not meet the Contract requirements. The acceptance of material or workmanship by the QAI will not preclude subsequent rejection, if found unacceptable by the Department.

506.06 Non-Conforming Work Submit a non-conformance report to the Fabrication Engineer describing the deficiencies and proposed solution. Correct or replace rejected coatings as directed by the Fabrication Engineer.

506.07 Facilities for Inspection Provide a private office at the fabrication plant for the Department's inspection personnel, or QAI's. The office shall be in close proximity to the work. The office shall be climate controlled to maintain the temperature between 68° F and 75° F and have the exit(s) closed by a door(s) equipped with a lock and 2 keys which shall be furnished to the Inspector(s).

The QAI's office shall meet the following minimum requirements:

Description	Quantity
Office area (minimum ft^2)	100
Drafting Table Surface (ft^2)	35
Drafting stools-each	1
Office Desk	1
Ergonomic Swivel Chairs	1
Folding Chairs	2
High-speed internet connection (ports) or wireless	1
Fluorescent Lighting of 100 foot-candles minimum for all work areas	2
110 Volt 60 Cycle Electric Wall Outlets	3
Wall Closet	1
Waste Basket with trash bags	1
Broom	1
Dustpan	1
Water Cooler	1
Cleaning materials-floor, surfaces, windows, for duration of the project	

The Contractor will be responsible for disposing of trash and supplying commercially bottled water for the water cooler.

The QAI has the option to reject any furniture or supplies provided to the QAI's office, based on general poor condition.

Provide parking space for MDOT personnel and/or QAI(s) in close proximity to the entrance to the QAI's office. Maintain the pathway between the parking area and the QAI's office so that it is free of obstacles, debris, snow and ice.

The facilities and all furnishings shall remain the property of the Contractor upon completion of the Work. Payment for the facilities, heating, lighting, telephone installation, internet connection, basic monthly telephone and internet charges and all furnishings shall be incidental to the Contract.

Failure to comply with the above requirements will be considered denial of access to the Work for the purpose of inspection. The Department will reject all Work done when access for inspection is denied.

506.08 Applicator Qualification Galvanizers shall be members of the American Galvanizing Association (AGA) or have a minimum of five years of experience and provide references acceptable to the Department. Shop-applied paint systems shall be applied by applicators that hold a current AISC Sophisticated Paint Endorsement (SPE) or are qualified in accordance with SSPC-QP3, *Standard Procedure for Evaluating Qualifications of Shop Painting Applicators.* For specialty items, the Fabrication Engineer may accept other shop qualifications based on experience and/or an audit by the Department. Thermal Spray Coating (TSC), including sealers and top coating, fusion bonded coatings and hot-dip galvanizing shall be applied in facilities with a minimum of five years experience of satisfactory performance.

506.09 Inspection Measure and record the following, as applicable to the coating application, in a Job Control Record (JCR):

A. Surface preparation - cleanliness and anchor profile.
B. Environmental conditions – ambient temperature, surface temperature, relative humidity, dew point.
C. Coating batch and/or lot number, date of manufacture and shelf life.
D. Mixing/thinning.
E. Dry Film Thickness (DFT) for each coat.
F. Cure data-time/temperature/relative humidity.
G. Final inspection and acceptance by the QCI.

Submit the format for the JCR to the Fabrication Engineer for review prior to beginning application of protective coating.

Provide work area illumination as follows:

Work Area Illumination Requirements in Foot Candles		
Description of Work	Minimum	Recommended
General Work Area Illumination	10	20
Surface Preparation and Coating	20	50
Inspection	50	200

Provide a light meter that measures illumination in foot candles.

Use *SSPC-VIS 1, Guide and Reference Photographs for Steel Surfaces Prepared by Dry Abrasive Blast Cleaning or SSPC-VIS 3, Guide and Reference Photographs for Steel Surfaces Prepared by Hand and Power Tool Cleaning* as required in order to determine acceptable surface cleanliness.

Measure and record the environmental conditions during application and during the entire curing cycle. Failure to provide accurate and complete environmental data may result in rejection of the coating or an extended cure time as determined by the Fabrication Engineer.

Measure and record the DFT of each coat in accordance with *SSPC-PA 2, Measurement of Dry Coating Thickness with Magnetic Gages* (PA 2).

ZINC RICH COATING SYSTEM

506.10 Description This work shall consist of surface preparation and application of coating systems in accordance with the Plans and this Specification. The color shall be as specified on the Plans.

506.11 Materials Coatings systems shall be from the Northeast Protective Coating Committee (NEPCOAT) Qualified Products List (QPL), list A or B. The list may be found through NEPCOAT's Web page: http://www.nepcoat.org.

Provide the paint batch description, lot number, date of manufacture, shelf life and the manufacturer's storage requirements to the QAI. Provide the manufacturer's published data sheet for each coat of the coating system including equipment, surface cleanliness, anchor profile, mixing, thinning, application, and cure time for the entire range of allowable environmental conditions and the DFT.

506.12 Limits of Work Coat all surfaces exposed in the assembled product unless otherwise specified. Apply a mist coat, 0.5 to 1.0 mils, of primer only to surfaces to be embedded in concrete.

Apply primer to faying surfaces of bolted connections that develop a class B slip coefficient in accordance with the *"Specification for Structural Joints Using ASTM A325 or A 490 Bolts" by the Research Council of Structural Connections* (RCSC). Provide documentation to demonstrate that the primer was tested and the requirements were met. Do not exceed the DFT applied for test purposes.

506.13 Surface Preparation Surface cleanliness shall be *SSPC-SP 10, Near-White Blast Cleaning* (SP 10) unless a higher standard of surface cleanliness is required by the manufacturer's published data sheet. Round all corners exposed in the assembled product to approximately a 3/32 inch radius, prior to abrasive blast cleaning. A series of tangents that approximate a radius may be considered as a rounded edge if there are no sharp breaks. Provide radius gauges to inspect corner preparation. The radius shall be the minimum specified above, but not greater than 3/16 inch.

The abrasive blast media shall meet the requirements of *SSPC-AB 1, Mineral and Slag Abrasives, AB 2, Cleanliness of Recycled Ferrous Metallic Abrasives and/or AB 3, Ferrous Metallic Abrasive*. The anchor profile shall be angular and meet the requirements of the coating manufacturer's published data sheet.

If compressed air is used for abrasive blast cleaning, perform a blotter test ASTM D 4285 at the beginning of each shift and at any time requested by the QAI. Notify the QAI prior to performing the test.

Measure and record the anchor profile in accordance with ASTM D 4417 Method C (replica tape). If the anchor profile fails to meet the minimum requirements, re-blast the substrate until the required anchor profile is achieved. If the anchor profile exceeds the maximum allowed, generate a Non-Conformance Report (NCR) describing the condition of the substrate and a proposed solution and submit it to the Fabrication Engineer for review.

If it has been established to the satisfaction of the QAI that the abrasive blast equipment is capable of providing uniform, acceptable anchor profile, a diminished degree of testing may be allowed at the discretion of the Fabrication Engineer.

The allowable time between abrasive blast cleaning and primer application shall not exceed the manufacturer's published recommendations or one work shift, whichever is less. Any evidence of rust bloom, flash rust or other surface conditions that cause the substrate cleanliness to fall outside the specified cleanliness standard will be rejected. Inspect all substrate immediately prior to coating application. Re-blast steel substrate that does not meet the surface cleanliness requirements.

506.14 Mixing and Application Record the batch and lot numbers of the coating, the type and amount of thinner used, the time and pot life of the coating.

Add thinner in accordance with the manufacturer's published data sheet. Measure thinner with a graduated cup, or other container, that clearly indicates the amount of thinner being added. Record the amount of thinner added. Mix the paint using the method, equipment and time recommended by the coating manufacturer. Mix each component separately and mix all components together for at least the minimum time recommended on the Manufacturer's Product Data Sheet but not less than two minutes.

Measure the environmental conditions in the immediate vicinity of the piece(s) being coated during the coating operation and during the entire cure period. Provide two data loggers capable of measuring ambient humidity and temperature. The data loggers shall come with software that can download the data onto a computer. Print out the data and provide a copy to the QAI for review prior to applying the subsequent coat of paint. Place the data loggers in the immediate vicinity of the coating operation during the entire application and curing cycle. The data will be used to determine that the cure/recoat time requirements for each coat have been met. Failure to comply will result in the coating being cured for the maximum time necessary to assure adequate cure, as determined by the Fabrication Engineer.

Stripe all corners, fasteners, welds and locations with poor access, in accordance with *SSPC-PA 1, Shop, Field and Maintenance Painting of Steel* (PA 1). Do not stripe using inorganic zinc primer (IOZ). Stripe the IOZ primer between the primer and intermediate coats using the intermediate coating.

Apply the coating using equipment recommended in the Manufacturer's Product Data Sheet, or equal. Apply the coating in a uniform manner without sags, runs or drips.

506.15 Dry Film Thickness Measure and record the DFT of each coat in accordance with PA 2. Record the following:

A. Gauge type/manufacturer/model
B. Serial number
C. Coat/shim used for calibration (e.g., Primer Coat or 5 mil shim)
D. Measurements/spot average/location
E. Cure time
F. Non-conforming areas and determination for correction

Each piece or area presented for acceptance, regardless of size, shall be considered a separate structure for purposes of determining the number of spot measurements to be taken, except that large quantities of small parts and/or secondary framing members coated at the same time may be measured at a lesser frequency, as directed by the

Fabrication Engineer. When random DFT testing of a large quantity of small parts and/or secondary framing members results in unacceptable DFT's, the Contractor shall have the option of measuring and documenting the DFT of each piece or removing the coating and/or recoating all pieces represented in the production lot.

506.16 Touch-up and Repairs Touch-up is the repair of minor blemishes, including but not limited to, scratches and abrasions that to do not penetrate underlying layers of coating. Perform touch-up using the same coating and methods specified in the Manufacturer's Product Data Sheet. Cure the touch-up coating in the same manner as the original coating.

Repair coating damage that penetrates underlying layers in accordance with the Manufacturer's Product Data Sheet and this Specification. Prepare areas to be repaired in a manner that assures the proper adhesion of each coat. Feather back each damaged layer so that each repair coat is continuous with each corresponding existing coat. The topcoat shall be smooth and uniform in appearance. Repair damaged or unacceptable shop coating before the piece is removed from the paint area.

506.17 Handling and Storage Handle coated members in a manner that avoids damage to the coating. Lift and move members using non-metallic slings, padded chains and beam clamps, softeners or by other non-injurious methods. Store painted material in a manner that prevents damage to the coating.

Document damage to the coating that is discovered after the product is loaded for shipment to the job site. Minor damage as a result of handling shall be considered field repair unless, in the opinion of the Fabrication Engineer, the damage is the result of negligence or poor handling methods. Damage that is deemed to be the result of negligence or poor handling methods shall be repaired as directed by the Fabrication Engineer.

506.18 through 506.19- RESERVED

HOT-DIP GALVANIZING

506.20 Description This work shall consist of surface preparation and application of hot-dip galvanizing in accordance with the Plans and this Specification. Hot-dip galvanizing shall meet the requirements of *AASHTO M 111/ASTM A 123, Standard Specification for Zinc (Hot-Dip Galvanized) Coatings on Iron and Steel* (A 123), including any applicable requirements listed in Section 2-Referenced Documents. The minimum average coating thickness grade shall conform to Table 2, Grade 100 (3.9 mils). The frequency of testing shall be in accordance with PA 2. The choice of the test method is the prerogative of the Contractor. Record the test results and provide them to the Department. Provide certification of compliance and written test results to The Department in accordance with

A 123 -Section 10. Hardware shall be hot dip galvanized in conformance with AASHTO M232 (ASTM A153).

506.21 Surface Preparation Abrasive blast-clean the steel to a minimum of *SSPC-SP 6, Commercial Blast Cleaning* (SP6) prior to galvanizing. Break all exposed corners to a suitable radius or flat in accordance with the AASHTO/AWS D1.5 Bridge Welding Code.

506.22 Repairs Repairs to galvanizing shall be in accordance with ASTM *A 780, Standard Practice for Repair of Damaged and Uncoated Areas of Hot-Dip Galvanized Coatings* (A 780), Annex A1 or A3. Zinc-rich paints for repairs may only be used with approval of the Fabrication Engineer.

506.23 Top-coating Galvanized Surfaces Areas of galvanized surfaces to be top-coated will be described on the Plans or in the Special Provisions.

Do not use chromate quenching or other types of quenching after galvanizing. Remove runs, sags, dross and other deleterious material from surfaces to be painted. Provide a smooth uniform surface, free of heavy build areas or other discontinuities that will project through the finish coat. Perform repairs to galvanizing in accordance with A 780. Remove visible surface contaminants in accordance with *SSPC-SP 1, Solvent Cleaning* (SP 1) prior to blast cleaning. Blast-clean surfaces to be coated in accordance with *SSPC-SP 7/NACE No.4-Brush-Off Blast-Cleaning* (SP 7). Measure the anchor profile in accordance with *ASTM D 4417 Method C* (replica tape). Record the results in a manner acceptable to the Fabrication Engineer. Assure that the anchor profile corresponds with the anchor profile requirements on the Manufacturer's Product Data Sheet.

506.24 Materials Provide materials in accordance with 506.11.

506.25 Mixing and Application Mix and apply in accordance with 506.14.

506.26 Dry Film Thickness Measure and record the DFT in accordance with 506.15.

506.27 Touch-up and Repairs Perform touch-up and repairs in accordance with 506.16.

506.28 Handling and Storage Handle and store material in accordance with 506.17.

506.29- RESERVED

DUPLEX – POWDER COATING OVER GALVANIZING

506.30 Description. This work shall consist of a duplex coating, consisting of hot dip galvanizing and high-performance, shop- applied, thermosetting-based, super-durable powder coatings (primer, topcoat, and clearcoat), for the steel tube approach railing and the steel pipe hand railing, two-bar. Color shall be green, RAL6005, to match the existing Riverwalk railing and street lighting masts, or as otherwise indicated on the plans and specifications.

The galvanizer shall be qualified and have demonstrated a minimum of ten years of experience in the successful application of hot dip galvanizing using the dry kettle process, and a minimum of five years of experience in the successful application of powder coatings over galvanizing within the same facility.

506.31 Materials. Galvanizing shall conform to section 506.20.

Powder coating shall consist of a three-coat, shop-applied, oven-cured, high performance, exterior thermosetting powder coating consisting of a durable zinc-rich powder coating primer, a super-durable powder coating topcoat, and a powder clearcoat applied over hot dipped galvanized (HDG) steel substrates. Furnish powder coating materials from one of the following approved suppliers:

1) AkzoNobel
2) PPG
3) Sherwin Williams
4) TIGER Drylac

The powder coating manufacturer shall certify in writing that:

1. The duplex coating facility applying the powder coating is certified to apply the powder by the coating manufacturer;
2. The powder coating meets or exceeds the following minimum performance requirements for use over hot dip galvanized surfaces:

Powder Coating (min.) Performance Requirements

	Test	Powder Primer	Powder Topcoat
1.	Thickness (SSPC PA2)	3 mils (min.)	5 mils (min.)
2.	Adhesion (ASTM D4541)	1050 psi (min)	1050 psi (min)
3.	Impact Resistance (ASTM D2794 Direct)	160 in. lbs.	160 in. lbs.
4.	Flexibility (ASTM D522,	pass	pass
5.	Pencil Hardness (ASTM D3363)	3B	2H
6.	Humidity (ASTM D4585) 100º F, 2000 hrs	Pass, no cracking or delamination	Pass, no cracking or delamination
7.	Corrosion Weathering (ASTM D5894, 13 cycles, 4000 hours)	blister rating: 10 rust rating: 7	---
8.	Dry Heat Resistance (ASTM D2485)	250º F	---
9.	Abrasion Resistance (ASTM D4060	200 mg loss (max)	---

10.	Salt Spray (ASTM B117) 2000 hrs	---	pass
11.	Color Retention (ASTM D2244) 10 years	---	3ΔE (based on inorganic resins)
12.	Chalk Resistance (ASTM D4214)	---	none
13.	Gloss Retention (ASTM D523) 10 years	---	45% loss (max)
14.	Xenon Arc Test (ASTM D 4798) 400 hrs	---	pass

Provide each coat of powder coating in sufficiently contrasting color to facilitate proper coverage and to distinguish it from previously applied coatings. The previous coat shall be hidden by application of each coat at the specified minimum thickness.

Provide all powder coating materials in sealed, original, containers that are properly marked to allow verification, with applicable material safety data sheets, application instructions and precautions, including the manufacturers' name, type of material, brand name, color, shelf life, purchase order number, lot and batch numbers, and quantity.

Repair and touch-up materials shall be supplied by the powder coating applicator and applied in accordance with the powder coating manufacturer's recommendations.

506.32 Equipment. Provide inspection equipment needed to verify the quality of the entire galvanizing, surface preparation, and powder coating processes, including a Type II dry film thickness gage that can be calibrated, calibration standards, and a mirror for use by the Department.

506.33 General. Provide all materials, equipment, and labor necessary to perform the scope of work whether or not the material or equipment is specifically identified in this Item. Conduct all galvanizing, surface preparation, powder coating operations, handling, shipment, and installation in a workmanlike manner in conformance with SSPC-PA1, these requirements, and to the reasonable satisfaction of the Department.

Perform the work in conformance to the Contract requirements, the reference standards, and the coating manufacturer's instructions, respectively.

506.34 Reference Standards. The latest edition of the following standards and regulations in effect at the time of the Bid form a part of this Specification. A copy of the reference standards applicable to the work shall be available at the shop facility for use by the Department's representative.

American Society for Testing and Materials (ASTM)
ASTM A123, Standard Specification for Zinc (Hot Dip Galvanized) Coatings on Iron and Steel Products
ASTM A153, Standard Specification for Zinc Coating (Hot Dip) on Iron and Steel Hardware
ASTM A385, Standard Practice for Providing High-Quality Zinc Coatings (Hot Dip)
ASTM A780, Standard Practice for Repair of Damaged and Uncoated Areas of Hot Dip Galvanized Coatings
ASTM D610, Standard Test Method for Evaluating Degree of Rusting on Painted Steel Surfaces

ASTM D6386, Standard Practice for Preparation of Zinc (Hot Dip Galvanized) Coated Iron and Steel Product and Hardware Surfaces for Painting.

American Association of State Highway & Transportation Officials (AASHTO)
AASHTO M111, Zinc (Hot Dip Galvanized) Coatings on Iron and Steel Products
AASHTO M232, Zinc Coating (Hot Dip) on Iron and Steel Hardware

American Galvanizers Association (AGA)
The Inspection of Products Hot Dip Galvanized After Fabrication
Powder Coating over Hot Dip Galvanized Steel, Powder Coating Journal, Feb 2004, Philip Rahrig, AGA Executive Director
Powder Coating over Galvanized Steel, Tom Langill, AGA Technical Director, Feb 2010.

Society for Protective Coatings (SSPC)
SSPC-SP 1, Solvent Cleaning
SSPC-SP 7 / NACE No. 4, Brush Off Blast Cleaning
SSPC-PA 1, Shop, Field, and Maintenance Painting
SSPC-PA 2, Measurement of Dry Film Thickness with Magnetic Gages

506.35 Submittals. Submit the following as applicable:

Surface Preparation and Powder Coating Plan

Provide a written plan to the Department for applying duplex coatings. Identify the manner of surface preparation, the powder coat system to be applied, film thickness, cure time between coats, repair materials and procedures of typical damage and defects in the duplex coating, and other information needed to successfully apply all coats of the duplex system.

Provide material product literature and MSD sheets for the coatings specified, along with test data indicating conformance to the performance criteria required.

Verification samples. Submit six 3-inch by 6-inch samples of shop-applied duplex coatings and colors proposed for use to the Resident a minimum four weeks prior to coating application. Samples shall be made of the same or comparable material and thickness as production pieces.

Substitutions or Approved Equals

Substitutions or 'Approved Equals' are defined as meeting the aesthetic, durability, and all other performance criteria described in this specification, and shall be accompanied by proof that the Substitution or 'Approved Equal' meets or exceeds these criteria. Approval is the discretion of the Department. Coatings or processes not matching or exceeding the approved specified process and aesthetic, durability, and performance criteria shall be removed and replaced at the expense of the Contractor and all Subcontractors that were involved with the supply of and application of the non-conforming product.

Fabricator-Galvanizer Coordination

Prior to fabrication and final submittal of shop drawings to the Department, fabricators shall submit shop drawings to the galvanizer for all metal fabrications to receive shop- applied duplex coatings, to review fabricator's shop drawings for suitability of materials for galvanizing and coatings, and to coordinate any required modifications to fabrications required to be performed by the fabricator.

The supplier of steel products shall notify the galvanizer if the chemical composition of the steel to be galvanized exceeds the following limits in order to determine its suitability for processing: 0.25% carbon, 0.22% silicon, 0.04% phosphorous, and 1.3% manganese.

506.36 Hot Dip Galvanizing (HDG). Fabricated products shall meet the requirements of ASTM A385 (for material composition, cleanliness, drainage vents, etc.) prior to galvanizing, and galvanized surfaces shall meet the requirements of ASTM D6386 (preparing zinc surfaces for painting), as applicable, and as stated herein.

Galvanize materials in accordance with specified standards and this specification. Galvanizing shall provide an acceptable substrate for applied coatings. The dry kettle process shall be used to eliminate any flux inclusions on the surface of the galvanized material.

Prior to galvanizing, the steel shall be immersed in a preflux solution (zinc ammonium chloride). The preflux tank shall be 12-14 Baumé and contain less than 0.4 percent iron. The wet kettle process is prohibited.

Implement the following procedures to provide the appropriate surface for the material to be galvanized:

a) Utilize and regularly inspect a monitoring recorder to observe any variances in the galvanizing bath temperature.
b) The pickling tanks shall contain hydrochloric acid with an iron content less than 8 percent and zinc content less than 3 percent. Titrations shall be taken weekly at a minimum.
c) All chemicals and zinc content will be tested at least once a week to determine compliance with ASTM standards. All testing will be done using atomic absorption spectrometry or x-ray fluorescence (XRF) equipment at a lab in the galvanizing plant.

506.37 Surface Preparation of Hot Dip Galvanizing (HDG). Prepare all surfaces in conformance to the requirements of this specification and the approved Surface Preparation/Powder coating Plan provided under 506.35, Submittals.

Prior to powder coating, clean and prepare galvanized surfaces as necessary to remove detrimental contaminants. (See Powder Coating over Galvanized Steel, Feb 2010 Tom Langill for cautions regarding cleaning.) If applicable apply cleaning

materials with clean lint-free rags or soft bristle brushes frequently changed to prevent reapplying contaminants. After cleaning, rinse thoroughly with hot water and allow the part to dry completely.

Prepare galvanized surfaces with SSPC-SP7, Brush-Off Blast Cleaning, using non-metallic abrasives at a reduced nozzle pressure as recommended by the equipment manufacturer, or abraded by approved mechanical means using sanding disks with appropriate abrasive, to thoroughly roughen the entire surface and produce a dense, consistent, sharp, angular, uniform anchor pattern with a profile height of 1.0-1.5 mils, exhibiting a uniform gray color free of any bright, shiny spangles and to an appearance and feel similar to sandpaper.

The required thickness of the zinc coating shall be maintained and checked prior to powder coating. Surface preparation shall be acceptable to the powder coating manufacturer's requirements. Additional surface preparation or a tie coat may be considered if required by the powder coating manufacturer and approved by the Department.

The substrate surface shall be dry and free from dust, dirt, oil, grease or other contaminants.

506.38 Discontinuities. All visually evident detrimental surface imperfections (e.g. flux inclusions, dross inclusions, oil) that are present on galvanized surfaces shall be cleaned, and any high spots, rough areas and edges, spikes, and sharp protrusions shall be removed by grinding to produce a smooth surface. Disbondment (peeling) of galvanizing is not acceptable and the piece shall be re-galvanized, or investigated for extent and severity and a repair solution proposed to the Department for approval before corrective action is taken.

Surface profiling shall be performed prior to the formation of "white rust" on the galvanized surface. If any "white rust" is detected by visual means, the galvanizing shall be stripped off and the steel re-galvanized in conformance with these specifications. "White rust" shall be as defined in the Inspection of Products Hot Dip Galvanized After Fabrication, Table IV, by the American Galvanizers Association.

Prior to powder coating galvanized products shall not be nested, stacked or stored with adjacent surfaces touching but shall be kept separated to be remain dry and permit the circulation of air between products.

506.39 Galvanized Steel Outgassing. The galvanized parts shall be subjected to a thermal cycle (i.e. outgassing) after surface profiling and before powder coating application. The thermal cycle should be set at the appropriate temperature and duration for the thickness of the product recommended by the powder coating manufacturer.

506.40 Powder Coat Application. The first coat of powder coating shall be applied within twelve (12) hours of galvanizing and within one hour of surface preparation of the galvanized surface and outgassing, at the galvanizer's facility, and in a controlled environment meeting applicable atmospheric requirements, as recommended by the coating manufacturer.

Pretreatment and powder coating application and curing shall be performed after galvanizing in conformance with the powder coating manufacturer's recommendations and shall consist of the following, unless approved otherwise:

- Verify that the galvanized surface exhibits the specified degree of cleaning immediately prior to powder coating.

- The coating and curing facility shall be maintained free of airborne dust and dirt until coatings are completely cured.

- The powder coating shall be electrostatically applied according to the coating manufacturer's written specifications, maintaining even coverage on all parts. The powder shall only be applied when both the ambient temperature is 65º F. or above, and the part surface temperature is between 60º and 95º F., and is (min.) 5º F. higher than the dew point. Relative humidity shall be less than 85 percent (max.).

- After applying the powder, all parts shall be placed in an oven, cured and bonded at the manufacturer's recommended levels (e.g. approximately 392º F. for 25 minutes). The Contractor shall ensure that a stable transfer exists between the powder application system and the curing oven to prevent the loss of powder from the parts.

- The powder coating shall be applied to a minimum dry film thickness of 3 mils primer and 5 mils topcoat, and in a manner that will ensure a uniform coating without holidays, runs, or detrimental build at edges. A clear coat shall be applied at the manufacturer's recommended thickness.

- Each coated part shall be visually inspected. Measure the coating thickness with a thickness gauge. Any part that does meet the specified coating thickness may be recoated immediately after lightly abrading (sanding) the surface. Once cured, all parts shall be allowed to cool sufficiently before further handling.

Duplex coatings shall exhibit a smoothness (i.e. rugosity) not greater than 4 rug (16-20 microns of variation) when measured by a profilometer over a 1-inch straight line on the surface of metal products less than 24 lbs/ linear foot. The profilometer shall be capable of operating in 1 micron increments.

Hardware shall be galvanized and powder coated as follows. Furnish an application procedure to the Department. Coating procedures for fasteners are not restricted to the same-facility (1.2) and 12-hour maximum window (3.3.1) restrictions, due to the different nature of fastener supply.

Bolts - Powder coat bolt heads. Minor overspray is permitted on the threads.
Nuts - Powder coat exterior nut surfaces and mask off interior surfaces.
Washers - Powder coat all washer surfaces.

506.41 Inspection and QC/QA. The applicator is required to conduct and document quality control inspection of the cleaning and powder coating operations including at a minimum, measurements of surface profile, surface cleanliness, dry film coating thickness, and visual inspection for coating defects. The data shall be recorded in a log maintained at the site and available for the Department's review during working hours.

The work is subject to QA inspection by the Department.

Facilitate QA inspection as required, including proper notification, allowing adequate time for inspections, and providing access to the work. Furnish, until final acceptance of the coating system, all equipment, reference documents, and instrumentation needed to inspect all phases of the work.

Measure the thickness of each coat using nondestructive magnetic dry film thickness gages. Comply with SSPC- PA2 for the calibration and use of gages and the minimum frequency of thickness measurements. QA Inspectors will not be limited by the frequency of thickness measurements of PA2 but will take measurements sufficient to assure that proper thickness is achieved on all surfaces as specified.

The presence or activity of Department QA inspections in no way relieves the Contractor of the responsibility to comply with all requirements of this Item, and to provide adequate inspections of its own to assure compliance with the requirements of this Item.

Finished products will be stamped "Approved" only after the loading has been completed and approved. No material shall be shipped without the prior approval of the Department.

506.42 Handling/Shipping/Installation. Duplex-coated materials shall not be lifted, placed on supports, or loaded for shipment until the shop coating has been adequately cured and inspected.

Exercise care in handling shop-coated materials in the shop, and during storage, shipping, field installation, and subsequent construction to protect the coating from any scraping, marring, or other damage to the surface finish. Coated material shall be insulated from lifting devices and from the scraping and rubbing of parts that would damage the coating, by the use of lifting softeners, nylon slings, padded cables, storage pallets, separators, cushioners, tie-downs, and other approved supports. Individual parts shall be wrapped or padded with effective protective material (e.g. foam, not paper or cardboard)

Comply with fabricator's and galvanizer's requirements for installation of materials and fabrications, including use of nylon slings or padded cables for handling shop-coated materials.

506.43 Touch-Up and Repairs. The total repair area shall be less than one quarter of one percent (0.25%) of the area of an individual member, or the member shall be rejected and re-galvanized and recoated with the duplex coating. [The repair area definition is comparable to Rust Grade 7 in ASTM D610, Standard Test Method for Evaluating Degree of Rusting on Painted Steel Surfaces.]

Repair damaged galvanizing and bare steel surfaces in accordance with ASTM A780, Standard Practice for Repair of Damaged Hot Dipped Galvanized Coatings, Annex A2. Thoroughly clean damaged areas to produce a clean, bare and dry bright metal surface with a roughened profile and feather into the edges of adjacent undamaged galvanizing. Use a power sanding disk per SSPC-SP3. For bolts use a thorough hand wire brushing and SP1 cleaning as a minimum.

Apply an approved organic zinc-rich repair paint containing 92 percent (min.) zinc by weight in the dry film, according to the manufacturer's recommendations, in two to four coats to a thickness equivalent to the surrounding galvanizing. Silver paint, brite paint, or aluminum paint is not acceptable.

The repair to the powder coat may be a liquid and brushed on or an aerosol and sprayed, whichever is appropriate to achieve an aesthetic finish and as long as the coats, cure, and minimum thickness of the original system are achieved. The Contractor shall provide a dry film thickness gage and check the thickness of the repair areas. Touch - ups shall be such that the repair is not noticeably visible from a distance of six feet.

The field-touch-up of shop-applied finish coatings shall be performed or supervised by personnel from the duplex coating facility for the warranty to apply.

Touch up fasteners in the field after installation, assuming there may be mechanical damage to nuts during tensioning fasteners.

Touch-up repair kits in sufficient quantity and touchup instructions shall be provided to the field for each type of shop-applied finish. Additional touchup repair kits and instructions shall be furnished to the Department for use after project acceptance for maintenance repairs.

506.44 Final Acceptance. Although the Department's QA Inspector may accept the finished duplex coated fabricated products before shipment to the jobsite, final acceptance of the duplex coat system by the Department will occur at the jobsite after installation of the pro duct, and after all coats and repairs have been completed.

506.45 Warranty. Should the duplex system fail within five years after the project has been accepted, the coating shall be repaired or replaced by the Contractor at no cost to the State. The extent and method of repair must be acceptable to the Department. System failure does not include damage from external agents, such as scraping from snow removal equipment, vandalism, debris impacts, collisions, etc., or normal loss of gloss and color. Once the duplex system has been accepted, a failure shall mean any visible corrosion, blistering, checking, cracking, or delamination (peeling) of the galvanizing or powder coating resulting from the installation of the product or from the performance of the duplex coating.

DUPLEX – EPOXY PAINT OVER GALVANIZING

506.46 Description This work shall consist of a duplex coating, consisting of hot dip galvanizing steel members and then applying an intermediate and top coat of paint. The paint color shall be as described on the Plans and Specifications.

The galvanizer shall be qualified and have demonstrated a minimum of ten years of experience in the successful application of hot dip galvanizing using the dry kettle process, and a minimum of five years of experience in the successful application of powder coatings over galvanizing within the same facility.

506.47 Materials Galvanizing shall conform to section 506.20.

The paint shall consist of an epoxy intermediate coat and polyurethane top coat from Northeast Protective Coating Committee (NEPCOAT) Qualified Products List (QPL), list A or B. The list may be found through NEPCOAT's Web page: http://www.nepcoat.org.

506.48 Submittals Submit the following:

- Analysis of the galvanizing bath (minimum of 98% zinc by weight required).
- The manufacturers' published data sheet(s) for the specified protective coating systems.

- Material Safety Data Sheets.
- Certification of Compliance and written test results in accordance with A 123, Section 10.

506.49 General Requirements

1. Abrasive blast clean all structural steel prior to galvanizing.
2. Galvanize all structural steel in accordance with ASTM A 123.
3. Prepare the galvanized surfaces for painting in accordance with ASTM D 6386-99, Standard Practice for Preparation of Zinc (Hot-Dip Galvanized) Coated Iron and Steel Product and Hardware Surfaces for Painting, (D 6386).
4. Apply an epoxy mid-coat and polyurethane top coat in accordance with the Manufacturer's Product Data Sheet and this Specification.

506.50 Surface Preparation for Paint. Remove visible surface contaminants in accordance with SSPC-SP 1, Solvent Cleaning (SP 1) prior to blast cleaning. Blast-clean surfaces to be coated in accordance with SSPC-SP 7/NACE No.4-Brush-Off Blast-Cleaning (SP 7). Measure the anchor profile in accordance with ASTM D 4417 Method C (replica tape). Record the results in a manner acceptable to the Fabrication Engineer. Assure that the anchor profile corresponds with the anchor profile requirements on the Manufacturer's Product Data Sheet.

Faying surfaces of slip-critical connections shall be masked from painting and shall be prepared in accordance with the *"Specification for Structural Joints Using ASTM A325 or A 490 Bolts" by the Research Council of Structural Connections* (RCSC). Faying surfaces shall be hand wire brushed until the faying surface is visibly altered when compared to the untreated galvanizing around the area that's brushed.

506.51 Materials The coatings shall be as specified above. Provide the paint batch description, lot number, date of manufacture, shelf life and the manufacturer's storage requirements to the Fabrication Engineer. Provide the Manufacturer's Product Data Sheet for application of each coat of the coating system including surface cleanliness, anchor profile, mixing, thinning, application, cure time for the entire range of allowable environmental conditions and the minimum/maximum dry film thickness (DFT).

506.52 Mixing and Application Add thinner in accordance with the manufacturer's published data sheet. Measure thinner with a graduated cup or other container that clearly indicates the amount of thinner being added. Record the amount of thinner added. Mix the paint using the method, equipment and time recommended by the coating manufacturer. Mix each component separately and mix all components together for at least the minimum time recommended on the Manufacturer's Product Data Sheet but not less than one minute.

Measure and record the environmental conditions in the immediate vicinity of the steel to be coated. The conditions shall be within the ranges specified in the manufacturer's published data sheet during the coating operation and during the entire cure period. Cure each coat for at least the minimum cure time specified for the environmental conditions.

Apply the coating using equipment recommended in the Manufacturer's Product Data Sheet or equal. Apply the coating in a uniform manner without sags, runs or drips.

506.53 Dry Film Thickness Measure the DFT in accordance with PA 2. Record the results in a manner acceptable to the Fabrication Engineer. When random DFT testing of a large quantity of small parts and/or secondary framing members results in unacceptable DFTs, the Contractor shall have the option of measuring and documenting the DFT of each piece or removing the coating and/or recoating all pieces represented in the production lot.

506.54 Touch-up and Repairs Touch-up is the repair of minor blemishes including but not limited to scratches and abrasions that to do not penetrate underlying layers of coating. Perform touch-up using the same coating and methods specified in the Manufacturer's Product Data Sheet. Cure the touch-up coating in the same manner as the original coating.

Repair coating damage that penetrates underlying layers in accordance with the Manufacturer's Product Data Sheet and this Specification. Prepare areas to be repaired in a manner that assures the proper adhesion of each coat. Feather back each damaged layer so that each repair coat is continuous with each corresponding existing coat. The topcoat shall be smooth and uniform in appearance.

Repair damaged or unacceptable shop coating before the piece is removed from the paint area.

506.55 Handling and Storage Handle coated members in a manner that avoids damage to the coating in the coating facility, during loading and shipping and during erection of the steel. Lift and move members using non-metallic slings, padded chains and beam clamps, softeners or by other non-injurious methods. Store material, both at the coating facility and in the field, in a manner that prevents damage to the coating.

Document damage to the coating that is discovered after the product is loaded for shipment to the job site. Minor damage as a result of handling shall be considered field repair unless, in the opinion of the Engineer the damage is the result of negligence or poor handling methods. Damage that is deemed to be the result of negligence or poor handling methods shall be repaired as directed by the Resident.

506.56 Method of Measurement No direct measurement or payment will be made for protective coatings. The coating limits shall be as shown or described in the Contract Documents.

506.57 Basis of Payment All work for Protective Coating will be paid for at the lump sum price for the component(s) to which it is applied. No separate payment shall be made for furnishing or applying Protective Coatings; the entire cost of protective coating shall be considered incidental to the multi-use bridge, ornamental railing, or other component to which it is applied. Payment will be full compensation for all labor, materials and equipment required to complete the surface preparation and coating work, including, but not limited to, coating and cleaning materials, staging or accessing, testing, surface preparation, cleaning, application, curing and repairs.

Westbrook
Bridge Street Bridge
WIN: 019282.00
October 11, 2013

SPECIAL PROVISION
SECTION 507
RAILINGS
(Steel Bridge Railing, 3 Bar)

507.01 Description This section has been amended as follows:

This work shall consist of the furnishing of all materials for, and the construction of, Steel Bridge Railing, 3 Bar in accordance with the lines and grades shown on the plans, the Standard Details, and the attached Supplemental Standard Detail.

507.02 Materials This section has been replaced in its entirety as follows:

Materials shall meet the requirements of the following Sections of Division 700 – Materials

Steel Bridge Rail	Structural Steel	713.01

507.05 Steel Bridge Railing The following is added to this section:

All steel parts shall be abrasive blast-cleaned to SSPC-SP6 and then hot dipped galvanized in accordance with Special Provision 506. Hardware shall be hot dip galvanized in accordance with Special Provision 506.

507.08 Method of Measurement This section has been amended as follows:

Steel Bridge Railing, 3 Bar will be measured as one lump sum unit, fabricated, delivered, erected and accepted.

507.09 Basis of Payment This section has been amended as follows:

The work under this Section shall be paid for at the contract Lump Sum price, complete and in place, which price shall include full compensation for all materials, transportation, tools, equipment, and labor required to perform the work as specified herein, as shown on the Contract Drawings, and/or as directed by the Resident.

Payment will be made under:

Pay Item		Pay Unit
507.0821	Steel Bridge Railing, 3 Bar	Lump Sum

Rail Bars:
1 ~ TS 8x4x5/16
2 ~ TS 4x4x1/4

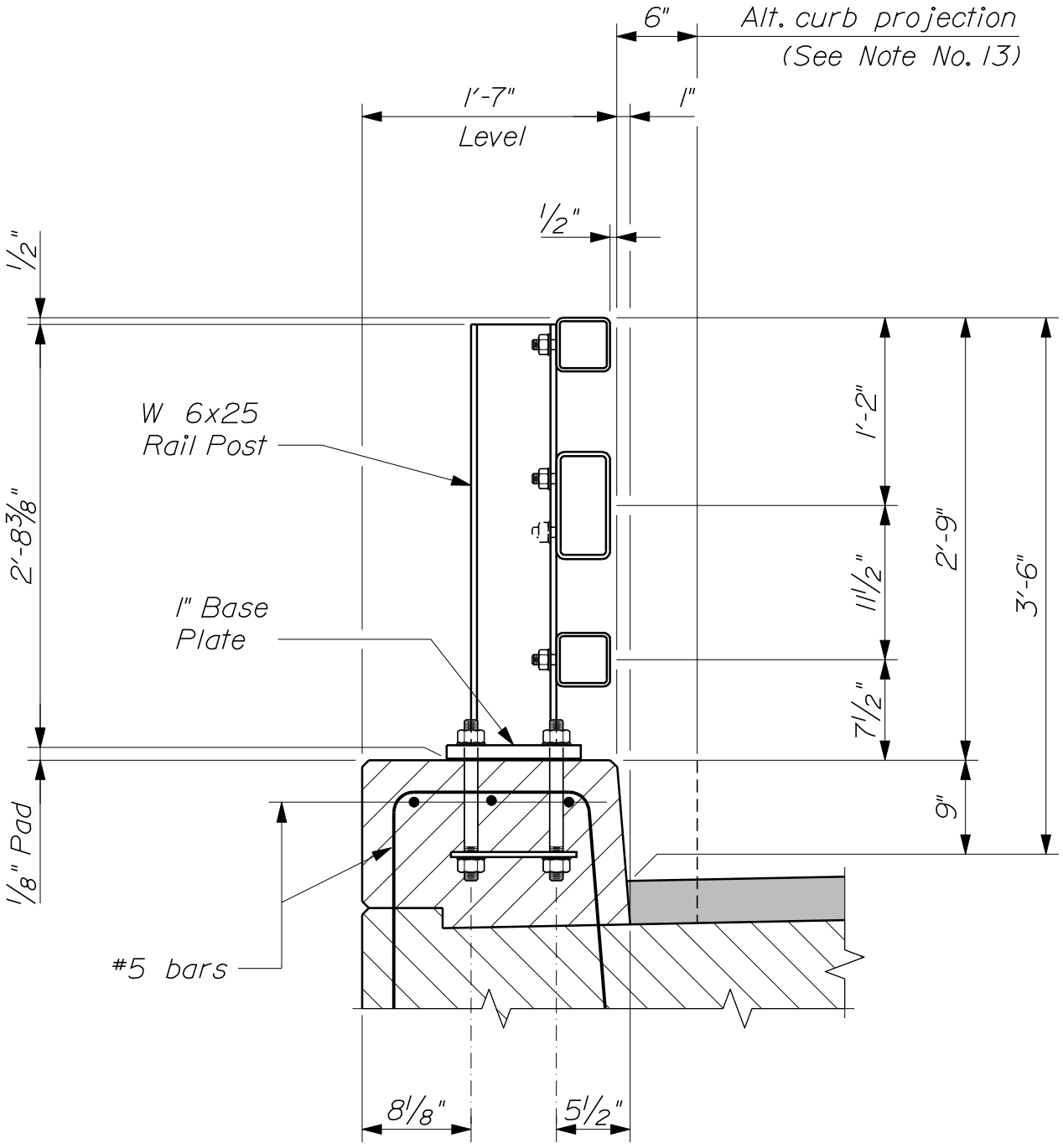

~ TYPICAL RAILING SECTION ~
(3 - Bar Traffic / Bicycle Railing)

SPECIAL PROVISION
SECTION 507
RAILINGS
(Ornamental Pedestrian Railing)

Description This work shall consist of furnishing and installing galvanized and powder coated ornamental pedestrian railing, including rail posts and anchorages, as well as installation of salvaged ornamental railing . The contractor shall be responsible for preparing all working drawings required to fabricate the railing system at locations shown on the drawings or as directed by the Resident. The term "railing" refers to the fully assembled, one piece unit including wooden handrails, wooden rubrails, steel vertical pickets, and railing posts.

Material:

Steel Plates, Shapes, and Bars: ASTM A 36/A 36M. Hot dipped galvanized in accordance with ASTM A123 unless noted otherwise.

Steel Pipe: ASTM A53 Type E Grade B F_y = 35 ksi Standard Weight (Schedule 40), unless another weight is indicated or required by structural loads. Hot dipped galvanized in accordance with ASTM A123 unless noted otherwise.

Welding Rods and Bare Electrodes: Select according to AWS specifications for metal alloy welded.

Railing Guard and Hand Rails: Pressure Treated Southern Pine wood.

Fasteners: General: Provide fasteners as indicated on the drawings. Provide Type 304 or 316 stainless-steel fasteners for exterior use. Select fasteners for type, grade, and class required.

Bolts and Nuts: Regular hexagon-head bolts, ASTM A 307, Grade A (ASTM F 568M, Property Class 4.6); with hex nuts, ASTM A 563 (ASTM A 563M); and, where indicated, flat washers.

Plain Washers: Round, carbon steel, ASME B18.22.1 (ASME B18.22M).

For metal fabrications exposed to view in the completed work, provide materials with smooth, flat surfaces without blemishes. Do not use materials with exposed pitting, seam marks, roller marks, rolled trade names, or roughness.

Drawings The Contractor shall prepare shop detail, fabrication, erection and other necessary working drawings in accordance with the requirement of Section 105.7-

Working Drawings: Include plans, elevations, sections, and details of metal fabrications and their connections. Show anchorage and accessory items, and coordinate installation of anchorages for metal fabrications. Furnish setting drawings, templates, and directions for installing anchorages, including sleeves, concrete inserts, anchor bolts, and items with integral anchors, that are to be embedded in concrete or masonry. Deliver such items to project site in time for installation.

Where metal fabrications are indicated to fit walls and other construction, verify dimensions by field measurements before fabrication and indicate measurements on shop drawings. Where field measurements cannot be made without delaying the work, establish dimensions and proceed with fabricating metal fabrications without field measurements. Coordinate construction to ensure that actual dimensions correspond to established dimensions. Allow for trimming and fitting.

Submit samples for color options of paint finishes to verify color match to desired color.

Construction Requirements

Fabricator Qualifications: A firm experienced in producing metal fabrications similar to those indicated for this project and with a record of successful in-service performance, as well as sufficient production capacity to produce required units.

Welding: Qualify procedures and personnel according to the following:

a. AWS D1.1, “Structural Welding Code-Steel.”
b. AWS D1.3, “Structural Welding Code-Sheet Steel.”
c. Certify that each welder has satisfactorily passed AWS qualification tests for welding processes involved and, if pertinent, has undergone recertification.

Railing system shall be capable of withstanding structural loads required by ASCE 7 without exceeding the allowable design working stress of materials for handrails, railings, anchors, and connections.

Fabricate handrails and railings to comply with requirements indicated for design, dimensions, details, finish, and member sizes, including wall thickness of tube, post spacings, and anchorage, but not less than needed to withstand indicated loads. Coordinate fabrication schedule with construction progress to avoid delaying the work. Configuration of ornamental railing shall be as shown on the drawings.

Interconnect members by butt-welding or welding with internal connectors, at fabricator’s option, unless noted otherwise. At tee and cross intersections, cope ends of intersecting members to fit contour of tube to which end is joined, and weld all around.

Form changes in direction of handrails and rails as follows:

a. As detailed.
b. By bending.
c. By flush-radius bends.
d. By radius bends of radius indicated.
e. By inserting prefabricated flush-elbow fittings.
f. By any method indicated above, applicable to change of direction involved.

Form simple and compound curves by bending members in jigs to produce uniform curvature for each repetitive configuration required; maintain cross section of member throughout entire bend without buckling, twisting, cracking, or otherwise deforming exposed surfaces of components.

Close exposed ends of handrail and railing members with prefabricated end fittings.

Provide fillers made from steel plate, or other suitably crush-resistant material, where needed to transfer wall bracket loads through wall finishes to structural supports. Size fillers to suit wall finish thicknesses and to produce adequate bearing area to prevent bracket rotation and overstressing of substrate.

When fastening to in-place construction, provide anchorage devices and fasteners where necessary for securing metal fabrications to in-place construction. Include threaded fasteners for concrete and masonry inserts, toggle bolts, through-bolts, lag bolts, wood screws, and other connectors.

Perform cutting, drilling, and fitting required for installing metal fabrications. Set metal fabrications accurately in location, alignment, and elevation; with edges and surfaces level, plumb, true, and free of rack; and measured from established lines and levels.

Fit exposed connections accurately together to form hairline joints. Weld connections that are not to be left as exposed joints but cannot be shop welded because of shipping size limitations. Do not weld, cut, or abrade surfaces of exterior units that have been hot-dipped galvanized and/or top-coated after fabrication and are for bolted or screwed field connections.

Comply with the following requirements for Field Welding:

a. Use materials and methods that minimize distortion and develop strength and corrosion resistance of base metals.
b. Obtain fusion without undercut or overlap.
c. Remove welding flux immediately.

d. At exposed connections, finished exposed welds and surfaces smooth and blended so no roughness shows after finishing and contour of welded surface matches that of adjacent surface.

All bolts in rails shall be well lubricated and tightened to a snug condition to allow for expansion within the completed railing system, threads on the bolts in Rails shall be disrupted upon final installation.

For railing mounted outside the limits of the concrete plaza slab, the railing post(s) shall be mounted in a circular concrete shaft foundation as detailed on the design plans. The foundation shall extend a minimum distance of 4'-0" below proposed grade. Construction of concrete foundation shall be incidental to rail construction.

Finishing

New Rail: Steel components of the railing system shall be galvanized and powder coated with the duplex powder coating over galvanizing coating outlined in Special Provision 506, Shop Applied Protective Coating – Steel. Finish metal fabrications after assembly. The finish color of the railing shall be RAL6005, with the design intent of matching the green finish of the existing riverwalk railing.

Reused Rail: Existing railing panels and posts removed as part of the project and proposed for reuse shall be reconditioned prior to reinstallation. Reconditioning shall consist of thoroughly pressure washing all rail components (including steel pickets, rail posts, wooden hand rails, and appurtenances) to remove mold, mildew, stains, loose paint, and other debris determined to be unacceptable by the Resident. Areas with missing paint shall be repainted after cleaning in accordance with the touch-up procedure described in the Duplex – Powder Coating over Galvanizing section of Special Provision 506.

Method of Measurement Ornamental Pedestrian Railing shall be measured by the lump sum.

Basis of Payment Ornamental Pedestrian Railing will be paid for at the contract unit price. Such payment will be complete compensation for fabrication and delivery of the required quantity of new ornamental railing (including galvanizing and top coating), refurbishment of salvaged railing to be reused, installation of the railing and railing components as shown on the plans, circular concrete shaft foundation(s) for post mounting as shown on the plans, and any labor, equipment, material, incidentals or consumables required to satisfactorily complete the work.

Payment will be made under:

Pay Item		Pay Unit
507.0842	Ornamental Pedestrian Railing	LS/LF

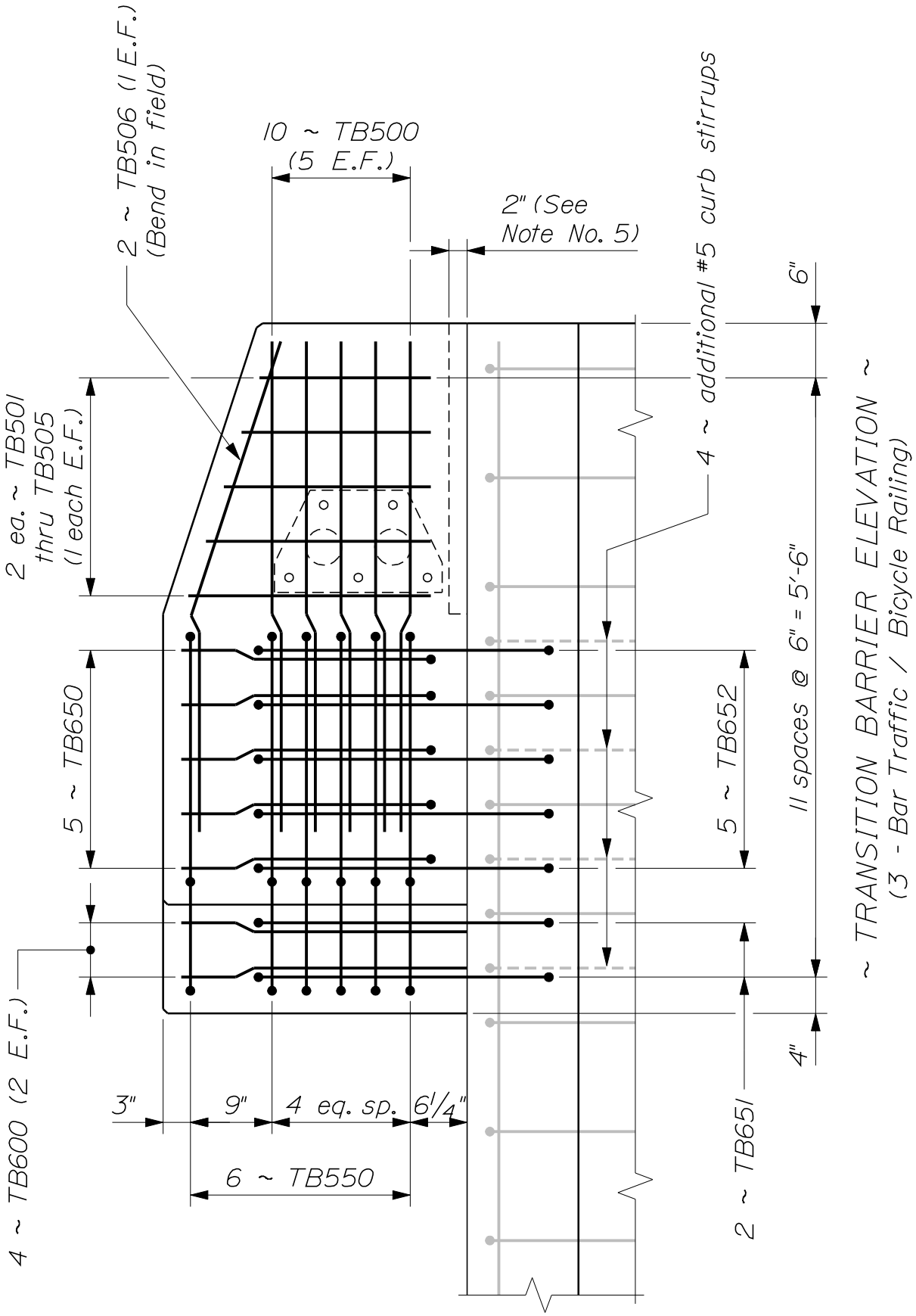

Sup.
Std. Detail

CONCRETE TRANSITION BARRIER

526(29A)

May 2013

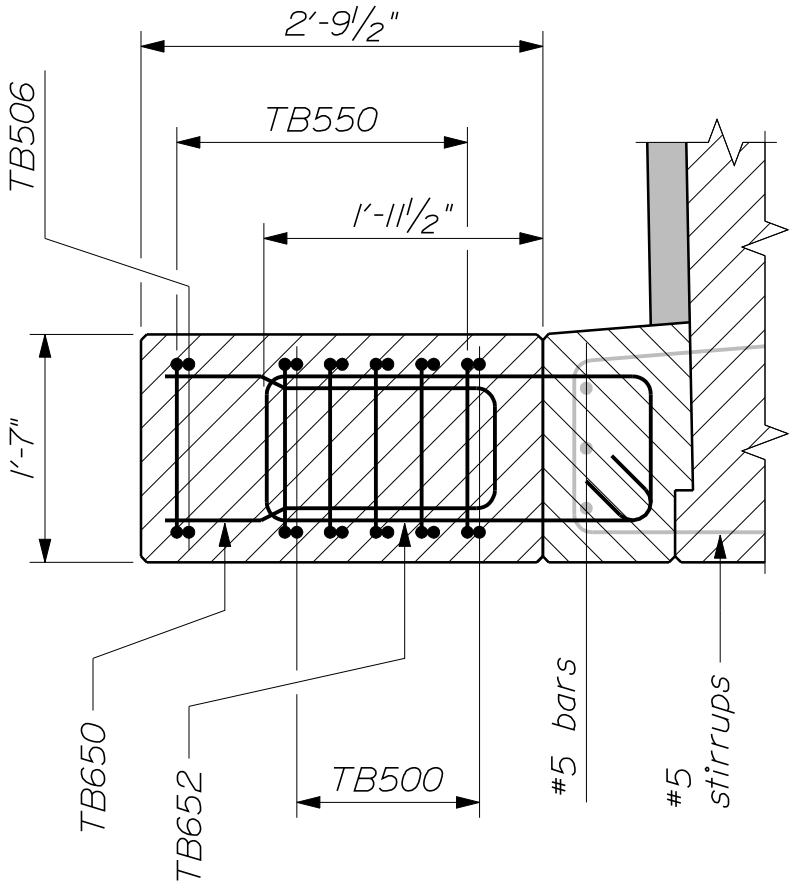

~ SECTION THRU STEM ~
(3 - Bar Traffic / Bicycle Railing)

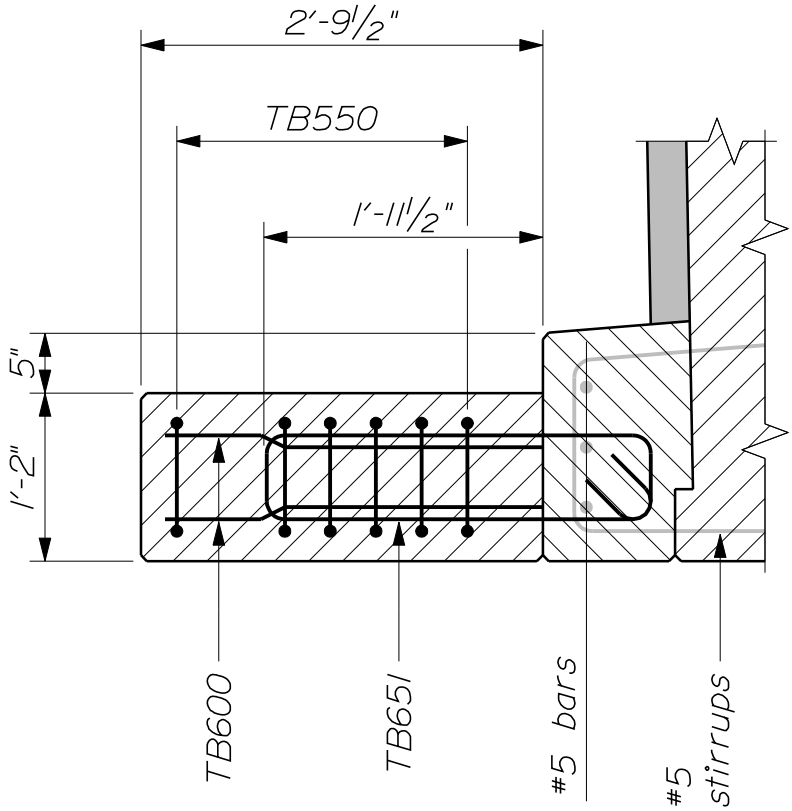

~ SECTION THRU RECESS ~
(3 - Bar Traffic / Bicycle Railing)

Sup. Std. Detail

CONCRETE TRANSITION BARRIER

526(29B)

May 2013

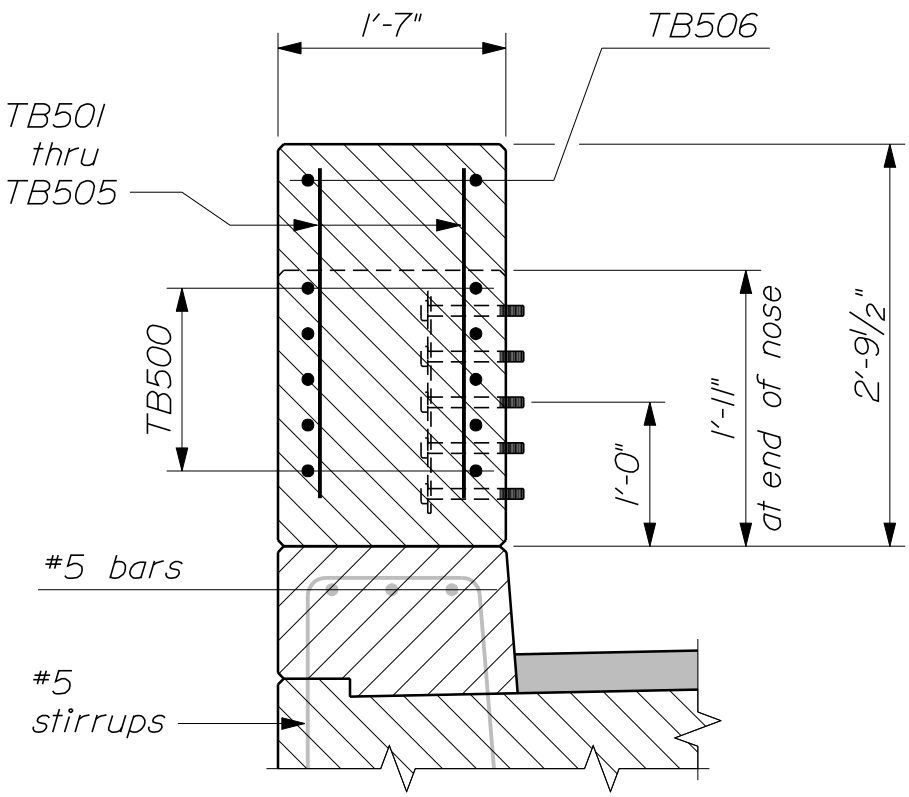

~ SECTION THRU NOSE ~
(3 - Bar Traffic / Bicycle Railing)

REINFORCING STEEL SCHEDULE								
	2 - Bar Traffic		4 - Bar Ped.		3 - Bar Bike		4 - Bar Bike	
	Qty.	Length	Qty.	Length	Qty.	Length	Qty.	Length
TB500	10	4'-6"	12	4'-6"	10	4'-6"	12	4'-6"
TB501	2	1'-8"	2	2'-11"	2	2'-2"	2	3'-2"
TB502	2	1'-7"	2	2'-9"	2	2'-0"	2	2'-10"
TB503	2	1'-7"	2	2'-7"	2	1'-10"	2	2'-6"
TB504	2	1'-6"	2	2'-5"	2	1'-8"	2	2'-2"
TB505	2	1'-6"	2	2'-3"	2	1'-6"	2	1'-10"
TB506	--	--	2	4'-8"	2	4'-8"	2	5'-1"
TB550	5	10'-2"	7	10'-2"	6	10'-2"	7	10'-2"
TB600	--	--	4	3'-4"	4	2'-7"	4	3'-7"
TB650	--	--	5	7'-4"	5	5'-10"	5	7'-10"
TB651	2	7'-11"	2	7'-11"	2	7'-11"	2	7'-11"
TB652	5	8'-9"	5	8'-9"	5	8'-9"	5	8'-9"

Notes:

The first digit following the letters of the mark indicate the size of the reinforcing bar. (TB500 = bar size #5.) All dimensions are out - to - out of bar.

Quantities given are for one Transition Barrier.

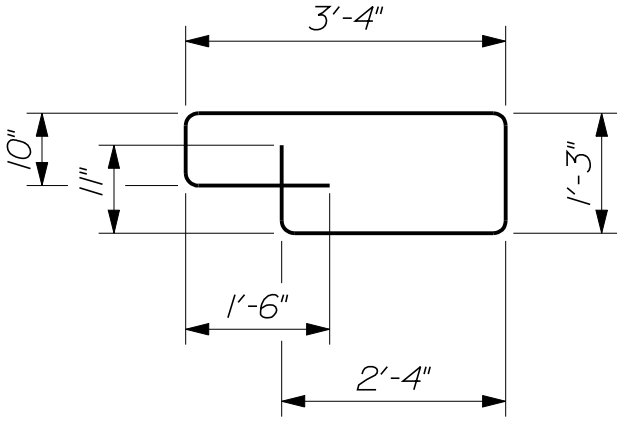

~ TB550 ~

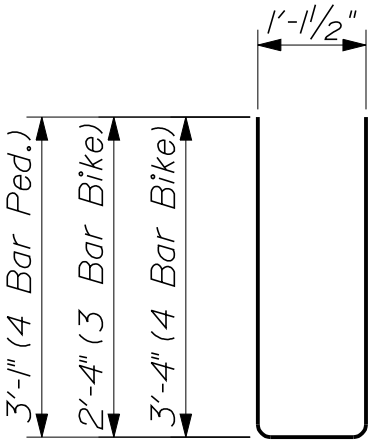

~ TB650 ~

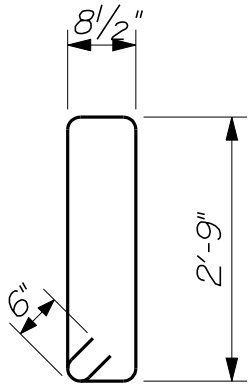

~ TB651 ~

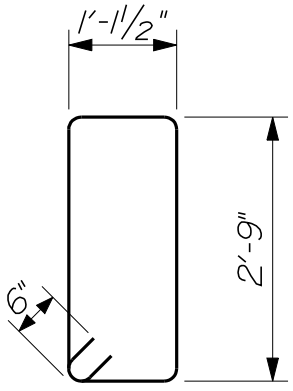

~ TB652 ~

SPECIAL PROVISION
SECTION 509
FURNISHING & INSTALLING HYBRID-COMPOSITE BEAMS

Description: This work shall consist of furnishing (fabricating, storing and delivering) and installing Hybrid-Composite Beams (HCB®'s) to the dimensions and details shown on the plans and according to the requirements of the Standard Specifications and these Special Provisions. HCB's for incorporation into the project shall include the FRP shell and shear connectors. Anchor bolts, shim plates and bearings will be paid for separately under other pay items.

Demonstration Project: The Contractor's attention is called to the fact that the HCB's represent an experimental element to be used on this project. Therefore, no substitutions or value engineering will be allowed on this item. This item shall include assistance and cooperation with Federal, State officials, and their representatives in the installation, maintenance, and monitoring of the superstructure before, during, and after installation. The Contractor shall plan and conduct their work accordingly.

In order to verify beam deflections, the Contractor shall survey the beam centerlines at the points indicated in the Plans after each of the following steps: beam erection, compression reinforcement placement, concrete deck placement, and after all superimposed dead load is applied. Survey results shall be provided to the Resident. The Contractor shall also survey the live load deflections resulting from the live load testing performed by the Department after bridge construction is completed and prior to opening the bridge to traffic. The Contractor shall provide a 24 hour period for unobstructed bridge access by the Department and its representatives to perform the live load testing and provide a minimum of 2 weeks' notice to the Resident.

Four 18 inch by 18 inch FRP beam witness panels shall be fastened to the bridge as directed by the Resident. Three panels shall be located on the sunny side of the structure and one panel located on the shaded side. Potential locations are on the fascia of the exterior beams, faces of abutments, wingwalls, or the pier. Panels shall be removable in order to allow for future testing and be located in areas where they will not be damaged by flooding or vandalism.

Quality Control/Quality Assurance: Within 30 calendar days the Contractor shall submit to the Department a Quality Control Quality Assurance (QCQA) Plan for fabrication of the HCB's. Fabrication of HCB's shall not commence until the QCQA Plan has been reviewed and approved by the Department.

Definitions: Terms and definitions found within this document shall be defined as outlined in the MaineDOT Standard Specifications, with the following added terms:

> Hybrid-Composite Beam (HCB®): A structural framing member comprised of three main sub-components that include a fiber-reinforced polymer (FRP) shell, compression reinforcement and tension reinforcement.

FRP shell: An external, fiber reinforced polymer shell consisting of a quad-weave glass fabric infused with a polyester matrix or an epoxy, vinyl ester resin matrix that encapsulates the other components of the HCB.

Compression Reinforcement: A cementitious material such as Portland cement concrete, which is placed by suitable means into a profiled conduit fabricated within the FRP shell. The profile of the conduit is designed to resist the internal compression forces in the beam.

Tension Reinforcement: A high strength, high modulus material such as high strength prestressing strands infused integrally into the FRP shell and designed to equilibrate the internal compression forces in the beam.

Shear Connector: A diagonal tension member with one end anchored in the compression reinforcement and the opposing end anchored in the deck slab. A plurality of shear connectors are utilized to provide a positive connection to the bridge deck as well as to facilitate composite bending behavior between the HCB and the concrete deck.

Preforms: Individual element components of materials to be incorporated into the manufactured FRP shell, e.g. glass fabric and tension reinforcement.

Tooling: The molds or forms that are used in the manufacturing of the HCB.

Supplier: The only licensed supplier of HCB®'s is HCB, Inc. of 1521 Lake Avenue, Wilmette, IL.

Manufacturer: A firm authorized by the HCB, INC. for the manufacturing of Hybrid-Composite Beams (HCB®).

Materials: Materials shall be according to the following. Any substitutions to the materials specified must be submitted to the MaineDOT for approval.

a) FRP Shell: The FRP shell shall be comprised of a glass fiber reinforced polymer laminate bonded to a low-density foam core. The materials used in the laminate shall be as follows:

(1) Glass Reinforcement: The glass reinforcement of the FRP laminate shall be as per the contract plans or final design

Acceptable Manufacturers include:

a) Vectorply
b) Owens Corning
c) V2
d) FGI
e) Other approved sources

Additional non-structural layers of glass veil such as PRE 0700-02014-074 REEMAY may be placed between the glass layers and tooling surfaces as necessary to enhance resin infusion. Additional non-structural layers of resin distribution media may be placed between the glass layers and the low-density foam.

(2) Resin: The matrix used in the manufacturing of the FRP Shell shall be a polyester resin or a bisphenol-A epoxy-vinyl ester resin with a dynamic viscosity between 100 and 400 centipoise at 77 degrees F. The resin shall be promoted with 12% cobalt solution comprising of between 0.07 to 0.15% by weight of resin, along with between 0 to 0.07% by weight N, N-Dimethylanileine (DMA), or as recommended by the manufacturer. The resin shall also contain 0.30% by weight UV-9 as a UV Stabilizer. 2, 4 Pentanedione may be used as an inhibitor to increase the gel time if necessary

Acceptable products include:

a) DERAKANE MOMENTUM™ 411-45 as manufactured by Ashland
b) Vipel® F007-AAA-00 as manufactured by AOC, L.L.C.
c) AROPOL RTM 80545-45 as manufactured by Ashland
d) STYPOL DX 040-8086 as manufactured by CCP
e) Approved equal.

(3) Foam Core: Where shown on the contract plans or in accordance with the final design, the interior volume of the shell shall be occupied by a polyisocyanurate (polyiso) foam core. The polyiso foam shall have an average density of no less than 2.0 lbs/cubic foot as determined by ASTM D1622 and a compressive strength of no less than 20 lbs/square inch as measured by ASTM D1621.

Polyiso foam shall be cut using a saw capable of cutting the profiled shape of the compression reinforcement in the polyiso foam core to within ±1/8” per eight foot.

Acceptable products include:

a) ELFOAM® P200 as manufactured by Elliott Company of Indianapolis, Inc.
b) 2lbs foam as manufactured by PolyCel Inc, of Stow, Massachusetts
c) Approved equal.

(4) Structural Adhesives: The adhesive used in joining pieces of laminate together shall be a two-component, medium viscosity, solvent-free methyl methacrylate or epoxy suitable for bonding plastics.

Acceptable products include:

a) Plexus MA560-1 as manufactured by ITW
b) Extreme 360M and Extreme 350M as manufactured by Extreme Adhesives
c) Weld On SS230 HV as manufactured by IPS Corporation
d) MES135G as manufactured by Momentive Performance Materials
e) Approved equal.

b) Compression Reinforcement: The Compression Reinforcement shall consist of Self-Consolidating Concrete (SCC). The SCC shall conform to the requirements of Section 502 of the Standard Specifications and as follows:

1. Minimum compressive strength at 28 days shall be as shown on the contract plans or in accordance with the final design
2. The minimum cementitious content shall be no less than 750 lbs per cubic yard.
3. The maximum water/cementitious material ratio shall be 0.42, which is to include pozzolans as cementitious material.
4. Target air content shall be 4% ± 3%.
5. The mix design shall contain either:
   Minimum 15% Fly ash by weight of total cementitious material, or
   Minimum 30% Granulated Blast Furnace Slag by weight of total cementitious material.
6. Coarse aggregate shall be a maximum 3/8 inch crushed gravel.
7. Minimum fine aggregate shall be not less than 45% of the total aggregate.
8. The mix shall contain a viscosity-modifying admixture at a dosage to be determined by the Contractor's Concrete Supplier.
9. The mix shall contain a hydration stabilizer dosed at a rate to ensure no hydration beginning for a minimum of three hours from batching or as needed by the ambient conditions at the time of concrete placement.
10. The measured spread of a slump flow test shall be within the range of 26 inches minimum and 30 inches maximum.
11. The mix shall contain a shrinkage compensating admixture. Dosage will be determined per manufacturers recommendation.

Permeability requirements of Section 502 of the Standard Specifications will be waived for SCC.

c) Tension Reinforcement: The Tension Reinforcement shall consist of one or more of the following:

a. Seven-wire, Prestressed Concrete Strand (PC) conforming to the requirements of ASTM A416, Grade 250 or 270. Where indicated, the strand shall be zinc coated in accordance with ASTM A475 and stress-relieved after galvanizing and stranding. The Tension Reinforcement shall be cut and bent after galvanizing. Seven-wire, Galvanized Barrier Strand, Grade 250 or 270 is also an acceptable substitution for ASTM A416 Strand.
b. Concrete Reinforcing Bars meeting the requirements of ASTM A615 or A706 Grade 60. Where indicated, the reinforcing bars shall be zinc coated (galvanized) in accordance with ASTM A767.
c. Other mild steels as indicated in the Contract Plans or in accordance with the final design meeting appropriate industry standards (ASTM, AISC, AASHTO, etc.) with the use of such materials, their source and fabrication subject to the approval of the engineer.
d. Glass Reinforcement as per section (a) under Materials of this specification.

d) Shear Connectors: The Shear Connectors shall be ASTM A615 or A706 Grade 60 reinforcement bars. Where indicated, the Shear Connectors shall be zinc-coated (galvanized) in accordance with ASTM A767 after they have been cut and bent to the sizes and shapes indicated on the Contract Plans. Bending tolerances and material certifications shall be in accordance with the appropriate sections of the Standard Specifications.

e) FRP Utility Support Connection Angles: The FRP Utility Support Connection Angles shall be bonded to the HCB's by the fabricator with an approved structural adhesive at the locations indicated in the Plans. The angles shall be pre-drilled by the fabricator for utility support attachment in the field.

1. Structural shapes shall be made from isophthalic polyester or vinyl ester resin with fire retardant additives to meet a flame spread rating of less than 25 per ASTM E-84, the flammability characteristics of UL 94 V0 and meets the self-extinguishing requirements of ASTM D-635. All structural shapes shall contain a UV inhibitor.
2. Pultruded profiles shall satisfy the visual requirements of ASTM D4385.
3. Structural FRP members' composition shall consist of a glass fiber reinforced polyester or vinyl ester resin matrix and glass reinforcements. A synthetic surface veil fabric shall encase the glass reinforcement. Glass strand rovings shall be used internally for longitudinal strength. Continuous strand glass mats or stitched reinforcements shall be used internally for transverse strength.

Equipment: Equipment shall be according to the following:

(1) Vacuum System: A vacuum capable of sustaining a pressure equal to 25 inches of mercury shall be required for the vacuum infusion of the FRP Shell. The vacuum system shall be outfitted with a reservoir system to accumulate any over filling of the matrix in the mold.

(2) Concrete Pump: For placement of the SCC, a boom type concrete pump truck may be allowed. The pump truck shall be capable of reaching all HCB's to be filled with one truckload of concrete, without moving the truck. Aluminum pipe or conduit will not be permitted in pumping or placing concrete. The Contractor shall also have a backup method in place for placing SCC, in the event of a pump truck failure. The backup method for placing the SCC shall be approved by the Resident, and in place and capable of restarting the SSC placement within ten minutes of the pump truck failure.

Working Drawings: Prior to beginning fabrication, the Contractor shall submit complete Working Drawings to the Resident for review and approval in accordance with Section 105 of the Standard Specifications. The drawings shall be on 11 x 17 inch sheets. Each sheet shall provide adequate space for review and approval stamps at the lower right corner. Each drawing

shall be completely titled according to the contract plans, including structure number, state contract number, route, section, and county and shall pertain to only one structure. If the Working Drawings have significant discrepancies, revised sets must be submitted until details comply with the contract requirements. Changes to previously approved shop drawings shall be subject to the approval of the Engineer of Record, and the Resident shall be supplied with a record of all such changes.

As a minimum, Working Drawings for Each Structure Shall include:

- Layout drawings identifying piece marks and orientation in the structure (including a North Arrow)
- Individual Piece Drawings indicating the length depth and width of piece, along with the spacing of shear connectors, location of piece mark, weight, location of all holes and/or inserts, location of lifting points, storage and transportation points, and any other information necessary to adequately build each beam.

Fabrication: Hybrid-Composite Beams shall be fabricated and stored according to the following requirements.

a) Preform Storage and Preparation: Glass fabrics, tension reinforcing and polyiso foam shall be stored above the ground in a clean, dry environment upon platforms, skids, or other supports. It shall be kept free from water, dirt, grease, or other foreign matter, and shall be protected from corrosive and or deleterious materials.

   Glass fabrics shall be sheared or water-jet cut to the shapes and dimensions indicated on the approved Working Drawings. The fabrics shall be cut on a clean cutting surface, free of any deleterious material that could adhere to the fabrics prior to placing in the tooling. Cut-outs within the glass fabric to accommodate details of the infusion process and/or details of the finished HCB shall be clearly indicated on the Working Drawings. Any cutting of rovings within a piece of glass fabric that exceeds 5 percent of the dimension parallel to the line of the cut may be rejected.

   Lap splices in the glass fabric will be permitted along the longitudinal direction of the beam. Lap splices shall be no less than 4-inches in length and placement shall be limited as follows:

   - No lap splice will be permitted within 6-feet of either end of the beam
   - If multiple, longitudinal splices are requires, the splices shall be spaced no less than 10-feet apart within a single layer of the FRP laminate
   - If splices are required in adjacent layers of the laminate, the splices shall be staggered to provide no less than 2-feet between splices in adjacent layers of glass within the FRP laminate
   - All proposed locations of lap splices shall be indicated on the approved Working Drawings

   Tension Reinforcement shall be cut on a clean surface, free of any deleterious material that could adhere to the steel prior to placing in the tooling. Cutting of the Tension

Reinforcement shall be performed utilizing a method that will not significantly alter the physical properties of the material. Cutting of the Tension Reinforcement with acetylene or plasma torches will not be permitted. Bends to the longitudinal strands necessary to produce the preformed Tension Reinforcement shall be made with a hydraulic press suitable to provide a tight uniform bend with a radius of no more than 3-inches. The tolerance on the out-to-out dimensions after bending of adjacent strands of Tension Reinforcement shall be +0, -1/2 inch. Tension reinforcement length may be adjusted as required to account for tolerance in the form.

Polyiso foam shall be prefabricated in large blocks to minimize the number of joints within the beam core. With the exception of some minor modifications to the blocks to accommodate manufacturing, the polyiso blocks shall be machine cut with a saw of sufficient throat to cut the entire depth of the section. All longitudinal cutting of the polyiso blocks to facilitate the shape of the compression reinforcement must be cut with a saw with sufficient depth to cut the entire depth of the section within the required tolerance. Once the longitudinal cuts for the compression reinforcement have been made, the separate pieces shall be match marked. Match marked pieces of polyiso foam shall be shipped and placed in the tooling to maintain the proper dimensions of the conduit for the compression reinforcement. Gaps in the joints between adjacent pieces of foam shall not exceed ¼-inch prior to pulling vacuum on the tooling. Additional processing for recesses and cutouts in the polyiso foam shall be performed with handheld and/or table mounted routers and saws suitable for the intended purpose.

Resins and other chemicals necessary for catalyzing the infusion matrix shall be stored in temperature-controlled environment, in accordance with the manufacturer's recommendations for each component.

b) Tooling: Tooling shall be capable of fabricating units to the dimensions required by the contract plans within all allowable tolerances. The tooling surfaces shall be manufactured of steel or FRP laminate skins of sufficient thickness so that they will remain true to shape under the vacuum infusion pressures. Clamps, pins and other connecting devices shall be designed to hold the tooling rigidly in place during placement of the preforms and application of vacuum pressure for infusion as well as to allow removal of the FRP Shell without damage to the laminate. If metal forms are used, they shall be free from rust, grease, or other foreign matter. ¾-inch radius fillets shall be built into the tooling at all sharp corners or as indicated on the Plans. The tooling shall be designed with monolithic joints and/or seals to facilitate an airtight chamber capable of sustaining 1 atmosphere of pressure, without any leaks for the duration of the infusion process.

The HCB's shall be manufactured to the dimensions shown on the Plans. Measurements of the product shall be recorded and compared to design plans and tolerances allowed. The dimensional tolerances for the tooling shall be as follows:

Maximum Allowable Dimensional Tolerances for HCB

HCB Component	Inches (except as noted)

Thickness of FRP Shell laminates	± 1/16 in.
Depth, overall	± ¼ in.
Width, overall	± ¼ in.
Length (string line measurement along bottom of beam)	± ¼ per 25 feet max ± ¾ in.
Variation from specified elevation and squareness or skew	± 1/8 in. per 12" depth max ± ¾ in.
Sweep	± ½" maximum
Camber variation from design camber	-½ in., +1/8 in. per 10 ft, +1 in. Max
Tipping and flushness of beam seat bearing area	± 1/8 in. per 24 inches
Shear reinforcing; longitudinal location	± 1 in.
Shear reinforcing; projection from beam surface	+ 1/2 in., - 1/2 in.

Prior to placement of preforms, the tooling shall be cleaned and coated with a semi-permanent form release agent common to the practice of composite manufacturing, e.g. Extend 19MDR or approved equal. Prior to charging the tooling with glass preforms, the Manufacturer may apply a gel coat to provide for protection of the laminate from Ultraviolet (UV) radiation in the completed FRP Shell.

c) Vacuum Assisted Resin Transfer: Prior to vacuum infusion of the vinyl-ester or polyester matrix, the Manufacturer must thoroughly seal the tooling and demonstrate that the sealed tooling can obtain a minimum vacuum pressure of 25 inches of Mercury and for that vacuum pressure to drop no more than 1" of mercury over a period of five of minutes.

Chemical additives and catalysts to be combined with the vinyl-ester resin shall be measured by weight, or the corresponding volume, based on the batch weight of the vinyl-ester resin. The HCB Fabricator shall maintain a log of each batch of resin and the weights or volumes of each constitutive material included in each batch. Once a batch of resin has been catalyzed, it must be thoroughly mixed and placed into the infusion resevoir within ten minutes. The manufacture may request an extension of time on a catalyzed batch, contingent on providing sufficient test data to demonstrate an extended gel time for the specific composition of the catalyzed matrix with a specified quantity of gel time inhibitor.

The infusion reservoir must be charged with a sufficient amount of resin at all times to prevent air bubbles from entering the infusion port(s) in the tooling. Once the matrix is introduced into the tooling, the infusion process shall continue, uninterrupted until it has been demonstrated that all evacuation ports have a surplus of resin flowing past the finished surface of the tooling and that no less than the predicted volume of resin has been introduced into the tool.

In the absence of tests to determine the cured state of the resin matrix, the tooling shall remain in place, under at least 25 inches of mercury until at least 6 hours have elapsed after

all evacuation lines have been clamped and the infusion process is considered to have been completed.

The FRP laminate comprising the shell shall be tested in accordance with the specified ASTM Standards in conformance with the minimum mechanical properties outlined in the table below. For laminate testing, a witness panel shall be manufactured for each beam. A minimum of three panels shall be tested. Adequate supporting documentation and the appointed values for the mechanical properties shall be obtained from the Manufacturer and provided to the MaineDOT Bridge Program.

PROPERTY	**UNITS**	**ASTM TEST METHOD**	**MINIMUM**
TENSILE STRENGTH Longitudinal Transverse	psi	D3039-07	 60,000 25,000
TENSILE MODULUS OF ELASTICITY Longitudinal Transverse	psi x 10^6	D3039-07	 3.10 3.10
COMPRESSIVE STRENGTH Longitudinal Transverse	psi	D695 or D6641	 20,000 20,000
SHEAR STRENGTH	psi	D7078	8,300
SHEAR MODULUS	psi x 10^6	D7078	0.85
WATER ABSORPTION	% max.	D570	0.7
DENSITY	lb./in^3	D792	0.060-0.068
SPECIFIC GRAVITY		D792	1.6-1.0
COEFFICIENT OF THERMAL EXPANSION (Longitudinal)	In./in./^{o}F	D696	6.0 x 10^6
GLASS CONTENT	% by weight	D2584	60

d) Post-Processing: Once the laminate of the FRP Shell has been sufficiently cured, the HCB may be removed from the tooling and ridges or fins (flash) of resin shall be removed by scraping or grinding as required. Any tooling or appurtenances internal to the FRP shell, necessary for forming of the compression reinforcement conduit shall be removed.

Subsequent to infusion of the bottom FRP Shell and the FRP top flange, the two match pieces shall be joined using structural adhesive. The two-part adhesive shall be mixed and applied in accordance with the manufacturer's recommendations, centered along the line of fasteners located along the top flange. Within the working time allowed for the adhesive, the FRP top flange shall be joined to the top of the beam shell using self-tapping stainless steel, screws capable of supplying the necessary clamping force to ensure a secure bond. Fasteners shall be spaced no more than 3'-0" on center for the entire length of the beam.

Holes in the FRP Shell to facilitate the installation of Shear Connectors, diaphragm connections or reinforcing steel, anchor bolt studs and attachments for appurtenances shall be done by the Fabrication Contractor using tools designed for the cutting of FRP laminates, including carbide tipped drill bit, water-jet cutting or other suitable means. Once these holes have been drilled, thoroughly remove all debris, including residual chunks of foam from the internal conduit within the FRP Shell.

Handling, Storing and Transporting: The FRP Shell, without compression reinforcement, may be placed upright, upside down or on its side, as necessary for drilling and post-processing of the finished piece. Care shall be taken in the handling of the HCB not to damage the surface finish of the laminate.

Prior to moving any HCB FRP shell to storage, it shall be clearly marked with the mark number and date of fabrication of the FRP Shell in the location shown on the Working Drawings. All units shall be stored in an upright position on suitable dunnage, not in contact with the ground, at the support points shown on the approved working drawings. The FRP Shells may be stacked. When stacking, the HCB's shall be maintained in the upright position at all times and each beam shall be supported with cribbing supporting the upper beam in the same locations as the HCB's below. HCB's shall be protected against any accumulation of water in the compression reinforcement void while stored at the Manufacturer's facility.

HCB's shall not be approved for shipment until all dimension tolerances have been checked and the void for the compression reinforcement has been checked to ensure it is the proper size and free of any obstruction.

All HCB's shall be shipped upright at the transportation points shown on the approved working drawings. FRP shells may be stacked for shipping and shall be protected against any accumulation of water in the compression reinforcement void during transit.

If the HCB's are to be stored on site, the same provisions outlined above for storage at the manufacturer's facility shall apply. In addition, the beams should not be allowed to come into contact with seawater, mud, grease or other deleterious materials that may be present on a jobsite.

The Contractor shall be responsible for removal of any standing water within the FRP shell immediately prior to placement of the compression reinforcement.

If the HCB's are damaged during handling and storage prior to their incorporation into the structure, the damaged HCB's shall be repaired or replaced at the Engineer's discretion and at the Contractor's expense.

Erection: The Hybrid-Composite Beams shall be erected to the lines and grades as indicated in the plans and in accordance with the requirements of these Special Provisions. At least thirty

days prior to erection, the Contractor shall submit an Erection Plan indicating lifting methods, erection sequence, construction inserts and other pertinent information. Penetrations in the HCB Shells for construction purposes shall be shown on the erection plan and will not be permitted unless approved by the Engineer of Record.

A. Beams shall be placed on clean bridge seats and tops of bearing devices. Any shifting of beams shall be done while they are held free of the supports.

B. HCB's shall be handled with a suitable hoisting device or crane of sufficient capacity to handle the members. Nylon slings or other approved methods shall be used to prevent damage to the surface of the HCB's. If the Contractor elects to precast the compression reinforcement prior to erection of the HCB's, then lifting anchors, in accordance with the approved working drawings shall be cast into the ends of the beams during placement of the compression reinforcement.

C. The Contractor shall provide sufficient bracing of the beams to prevent rotation or instability during placement of the compression reinforcement and forming and casting of the deck and end diaphragms. Bracing shall also provide for a tie-down force to prevent displacement of the beams resulting from climatic events such as high winds or wave impact or other environmental or jobsite hazards, as required.

D. The shear connectors must be in place and positively secured prior to placing the compression reinforcement.

E. The compression reinforcement shall be placed prior to placing the deck concrete in accordance with the approved filling plan.

F. Subsequent to placing the compression reinforcement in the HCB's and prior to placing the reinforcing steel for the deck, the longitudinal space between adjacent beams shall be formed and/or filled by the Contractor by suitable means to prevent leakage of mortar or other debris before or during casting of the bridge deck. All stay-in-place materials used to form the deck shall be non-corrosive. The materials and methods for forming the deck shall be submitted to the Resident for approval prior to initiating this work.

<u>Placement of Compression Reinforcement</u>:
The Contractor will have the option of either placing the compression reinforcement prior or subsequent to erection of the HCB shells. The Contractor's Quality Control Technician (QCT) shall be present for all compression reinforcement concrete placements. In either case the Contractor shall be responsible for ensuring that all requisite reinforcing bars, dowel bars and other inserts have been properly installed in the HCB shell prior to placing of the compression reinforcement.

<u>Precast Compression Reinforcement</u>:
If the Contractor elects to precast the compression reinforcement, he shall not receive any additional payment for any additional reinforcement or couplers that may be required to make

connections between units or to cast-in-place reinforcing in the field. The HCB's shall be supported at the bearing areas as shown on the Plans (or other locations as shown on the approved Working Drawings) and shall meet the requirements of Standard Specification 523 Bearings. The HCB's shall be suitably braced during the placement of the compression reinforcement. HCB's shall not be moved after placement until the compression reinforcement has reached the required strength indicated on the approved working drawings.

Compression Reinforcement Placed Subsequent to Erection:
HCB's shall be set to the line and grade within tolerances on final bearing surfaces and braced as required against rollover. Placement of the compression reinforcement shall proceed in accordance with the approved placement plan. No loads shall be placed onto the filled HCB's until the compression reinforcement has reached the required strength indicated on the approved working drawings. Compression Reinforcement Placement shall be separate from any other concrete placements that comprise the substructure or superstructure.

A. Written Placement Plan:
A written placement plan shall be submitted at least 30 days prior to the first placement of concrete compression reinforcement. The written placement plan shall provide as a minimum the following information:
1) List all equipment to be used. Manufacturer performance data will be required for any pumping equipment.
2) The concrete mix design to be used.
3) The intended method and sequence of placing the concrete. This shall include a concise written narrative and diagrams and/or photographs as necessary so that the process will be clearly defined.
4) The name(s) of the responsible person in charge for the Contractor

B. Pre-Placement Meeting:
The Contractor or the Engineer may request a Pre-Placement meeting upon approval of the Placement Plan. The meeting shall include the Contractor's Superintendent and responsible person in charge, the QCT, a representative from the pumping subcontractor (if any), a representative from the concrete supplier, the Resident, as well as representatives from the Department and HCB, Inc.

C. Placing Compression Reinforcement:
Concrete shall not be placed until the HCB's and shear connectors have been checked and approved by the Resident. The beams shall be clean of all debris and the HCB shell purged of any standing water.

The only acceptable method(s) shall be that approved in the placement plan. The SCC for the compression reinforcement shall be pumped into the HCB at the locations shown on the approved working drawings. If a concrete pump is used, the concrete pressure at the discharge end of the pump shall be no more than 10 psi. The filling shall continue until there is sufficient evidence at vent ports at the ends of the beams that the conduit for the compression reinforcement is completely filled. Once filling has been initiated for any given

HCB, the beam must be completely filled without delay. Cold joints in compression reinforcement will not be allowed. Adjustments to the placement plan based on ambient conditions and field experience will be allowed after the completion of the first beam with the concurrence of the Resident.

Although SCC is a flowable concrete that is designed for placement with no vibration, the Contractor may find it necessary or may be directed to use vibrators to ensure that the HCB shell is completely filled with the compression reinforcement and free of any air voids. For this purpose, 2-inch diameter holes may be drilled into the top flange of the HCB shell at four-foot intervals along the top flange in the end quarter of each end to accommodate a conventional concrete vibrator. Furthermore, the Contractor shall have on site, a drill and 2-inch diameter drill-bit or hole saw capable of drilling additional holes as needed for placement of the compression reinforcement. The location of any additional holes necessary during placement of the concrete must have the concurrence of the Resident.

In addition, hand placement of concrete may be used to completely fill the final few inches of the beam. It is the Contractors responsibility to ensure each beam is completely filled. Due to the nature of SCC Concrete, the contractor may have to remove some foam or excessive bleed water by placing additional concrete by hand in the injection or vibration openings after pumping is complete until such time as concrete appears to the tops of these openings.

Care shall be taken to prevent mortar from spattering on the HCB shell and, reinforcing steel and forms. Concrete or mortar that becomes dried on the HCB, reinforcing steel or forms shall be thoroughly cleaned off before the final covering with concrete. Upon completion of the bridge structure, the HCB's shall be cleaned of all concrete, mortar or other materials present on the HCB shells in a manner that does not damage the HCB's and as approved by the Resident.

No less than 24 hours after the placement of the compression reinforcement, but prior to placing the deck reinforcement, the Contractor, shall inspect the beam(s) containing cast compression reinforcement for voids. The inspection shall consist of a minimum of the following:

- Visual Inspection of all openings including around the shear connectors and embedded items for voids;
- Sounding along the top flange for voids using a hammer
- Drilling through the FRP top flange where voids are suspected by either of the two methods above to ensure complete filling of the beams.

If the inspection indicates the presence of voids, they shall be filled using either the same SCC concrete mix, an approved MaineDOT prepackaged grout with the same 28 day compressive strength as the SCC mix or the deck concrete placement when the void is completely exposed to the deck and the opening is not less than 1" across in any direction. Voids not filled with the deck concrete placement shall be re-inspected to ensure the void has been filled.

D. Delivery:
Delivery and discharge of the concrete from the mixer shall be completed within a maximum of 2½ hours from the time that the cement is added. Placement of concrete in any given HCB shall not be initiated until the Contractor has demonstrated that there is sufficient concrete located at the site as verified by the Resident for placement in the final structure. The Contractor may request permission from the Resident to add water or admixtures to the mixture before or after discharge has been initiated from the mixer as long as the amount of additional water does not exceed the maximum water/cement ratio for the approved mix design. Concrete that is allowed to stand in the pump line for a period of more than ten minutes shall be purged from the line and shall not be utilized for compression reinforcement and a slump flow range test shall be required before continuing pumping operations. Recirculation of concrete shall not be considered "standing" for this specification.

E. Temperature Restrictions: Concrete Temperature when pumped into the HCB's shall not exceed 75ºF. Placement shall not be initiated unless the ambient temperature is at least 40ºF and below 80 degrees F. Conversely, placement shall not be initiated if the temperature of the HCB shell is in excess of 90 ºF. Concrete, which has been rejected for any reason, shall be removed immediately from the job site and disposed of properly at the Contractor's expense.

Method of Measurement: Hybrid-Composite Beams shall be measured by the lump sum.

Basis of Payment: Payment for Hybrid-Composite Beams shall be considered full compensation for fabrication, delivery and installation of the HCB's, including the FRP Shells complete with tension reinforcement, longitudinal strands in compression arch, shear connectors, supply and placement of compression reinforcement, FRP utility support connection angles, temporary bracing as required and all submittals required for approval prior to execution of this work. Payment shall also include the fabrication, delivery, installation, and testing of beam witness panels and all beam deflection survey, monitoring, and reporting. Anchor bolts, shim plates, and bearings shall be paid for under separate items.

Payment will be made under:

Pay Item		**Pay Unit**
509.7	Composite Beam	Lump Sum

SPECIAL PROVISION
SECTION 511
Cofferdams

Section 511 is delete in its entirety and replaced with the following:

511.01 Description This work shall consist of the complete design, construction, maintenance and removal of cofferdams and other related work, including dewatering and inspection, required to allow for the excavation of foundation units, to permit and protect the construction of bridge or other structural units and to protect adjacent Roadways, embankments or other structural units, in accordance with the Contract.

The cofferdam designated for each abutment location shall include the adjacent wingwalls. The river pier has its own designated cofferdam in the Contract.

511.02 Materials As specified in the cofferdam Working Drawings.

511.03 Cofferdam Construction

A. Working Drawings The Contractor shall submit Working Drawings, showing the materials to be used and the proposed method of construction of cofferdams to the Department. Construction shall not start on cofferdams until such Working Drawings have been submitted. Any review of or comment on, or any lack of review of or comment on, these Working Drawings by the Department shall not result in any liability upon the Department and it shall not relieve the Contractor of the responsibility for the satisfactory functioning of the cofferdam.

B. Construction Construct cofferdams in conformance with the submitted Working Drawings. Cofferdams shall, in general, be carried below the elevation of the bottom of footings to adequate depths to ensure stability and adequate heights to seal off water. Cofferdams shall be braced to withstand pressure without buckling, secured in place to prevent tipping or movement and be as watertight as necessary for the safe and proper construction of the substructure Work inside them. With the exception of construction of a concrete foundation seal placed under water, the interior dimensions of cofferdams shall provide sufficient clearance for the construction and inspection of forms and to permit pumping outside of forms. The Contractor shall be responsible for the righting and resetting of cofferdams that have tilted or moved laterally, as required for construction.

During the placing and curing of seal concrete, maintain the water level inside the cofferdam at the same level as the water outside the cofferdam, to prevent flow through the concrete.

No timber or bracing shall be used in cofferdams in such a way as to remain in the substructure Work.

Cofferdams shall be constructed to protect fresh concrete against damage from the sudden rising of the water body, to prevent damage by erosion and to prevent damage to adjacent Roadways, embankments or other structural units.

Unless otherwise noted, cofferdams, including all sheeting and bracing involved, shall be removed after the completion of the substructure Work in a manner that prevents disturbance or injury to the finished Work.

Cofferdams shall be constructed, dewatered and removed in accordance with the requirements of Section 656 - Temporary Soil Erosion and Water Pollution Control and related Special Provisions.

C. Inspection of Seal Cofferdams Seal cofferdam excavations shall initially be inspected and approved by the Contractor.

For each seal cofferdam excavation, the Contractor shall submit a written procedure to the Resident for sediment/overburden removal and excavation inspection. For cofferdams where seal concrete is to be placed on bedrock, the inspection procedure shall describe the Contractor's final cleaning and inspection process for attaining cleanliness of each cofferdam excavation. For cofferdams where seal concrete is not excavated to bedrock, the procedure shall describe the Contractor's final cleaning and inspection process for attaining the bottom of seal elevation shown on the Plans.

The Contractor shall notify the Resident at least 48 hours prior to when each seal cofferdam excavation will be ready for final inspection by the Department. The Contractor shall allow adequate time for each occurrence of cofferdam excavation inspection by the Department. The Contractor shall provide and maintain access and equipment, such as steel probes, for the Resident and/or the Department's Dive Team to independently inspect each cofferdam excavation.

No seal concrete placement shall begin until the Department has approved the cofferdam excavation.

511.04 Pumping Pumping from the interior of any cofferdam shall be done in such a manner as to prevent any current of water that would carry away or segregate the concrete.

Pumping to dewater a sealed cofferdam shall not commence until the seal concrete has set sufficiently to withstand the hydrostatic pressure and meets the following minimum curing time, after the completion of the installation of the seal concrete:

1. When the temperature of the water body outside the cofferdam is greater than 40°F, a minimum of 5 days.
2. When the temperature of the water body outside the cofferdam is less than 40°F, a minimum of 7 days.

Procedures for the removal of all water and materials from cofferdams shall be described in the Soil Erosion and Water Pollution Control Plan as required in Section 656 Temporary Soil Erosion and Water Pollution Control and related Special Provisions.

511.05 Method of Measurement Cofferdams will be measured as one lump sum unit, as indicated on the Plans or called for in the Contract.

511.06 Basis of Payment The accepted quantity of cofferdam will be paid for at the Contract lump sum price for the respective cofferdam items, which price shall be full compensation for design, construction, maintenance, inspection and removal.

When required, the elevation of the bottom of the footing of any substructure unit may be lowered, without change in the price to be paid for cofferdams. However, if the average elevation of more than 25% of the area of the excavation is more than 3 feet below the elevation shown on the Plans, and if requested by the Contractor, then the additional costs incurred that are included in the cofferdam Pay Item will be paid for in accordance with Section 109.7 - Equitable Adjustments to Compensation. The Contractor shall immediately notify the Department when these additional costs commence. Failure of the Contractor to provide this notification will result in undocumented additional work that will be non-reimbursable. The Department will evaluate this additional work to determine an appropriate time extension, if warranted.

All costs for sedimentation control practices, including, but not limited to, constructing, maintaining, and removing sedimentation control structures, and pumping or transporting water and other materials for sedimentation control will not be paid for directly, but will be considered incidental to the cofferdam Pay Item(s).

All costs for related temporary soil erosion and water pollution controls, including inspection and maintenance, will not be paid for directly, but will be considered incidental to the cofferdam Pay Item(s).

All costs associated with preparation of Working Drawings, design calculations, written procedure for sediment/overburden removal and excavation inspection, and the inspection of the seal cofferdam excavation shall be considered incidental to the cofferdam Pay Item(s). There shall be no additional payment for repeated inspection by the Department of the same cofferdam excavation.

All costs for cofferdams and related temporary soil erosion and water pollution controls, including inspection and maintenance, will be considered incidental to related Pay Items, when a specific Pay Item for cofferdams is not included in the Contract.

Seal concrete will be evaluated under Section 502.

Payment will be made under:

Pay Item	Pay Unit
511.07 Cofferdam	Lump Sum

Revised: 7-1-13

SECTION 515 - PROTECTIVE COATING FOR CONCRETE SURFACES

515.01 Description This work shall consist of furnishing and applying a protective coating on concrete surfaces as called for on the Plans or as designated by the Resident in accordance with these specifications.

515.02 Materials Materials shall meet the requirements of Type 1c penetrating silane concrete sealers, from the MaineDOT Qualified Products List (QPL).

515.03 Surface Preparation On surfaces to be treated, all voids shall be filled with mortar and the entire surface shall be dressed by dry rubbing to remove form marks and blemishes to present a neat appearance. The concrete shall remain dry for at least 48 hours before treatment and shall be free of laitance, oil, grease, dirt and dust. All traces of dust shall be removed immediately before applying the silane sealer.

The treatment shall not be done until at least 14 days after casting the concrete, or in accordance with the manufacturer's published recommendations, and completed at least 24 hours before the treated portion is opened to traffic.

515.04 Application The application rate and method of application shall be in accordance with the manufacturer's published recommendations.

When practical, treatment of the concrete surfaces shall be completed before exposure to deicing salts. The temperature of the concrete to be treated shall be above 40°F at the time of application, or per the manufacturer's published recommendations.

515.05 Method of Measurement Protective coating for concrete surfaces will be measured for payment by the square yard or lump sum unit as specified, satisfactorily applied and accepted.

515.06 Basis of Payment Protective coating for concrete surfaces will be paid for at the contract unit price per square yard or lump sum, as specified.

Payment will be made under:

	Pay Item	Pay Unit
515.20	Protective Coating for Concrete Surfaces	Square Yard
515.21	Protective Coating for Concrete Surfaces	Lump Sum

SPECIAL PROVISION
SECTION 518
STRUCTURAL CONCRETE REPAIR
(Crack Repair)

Description: The work under this item includes all labor, materials and equipment necessary to complete the work specified in this Section, complete in place, including but not limited to the following:

1. Injection grouting of structural cracked concrete.
2. Selective demolition, removal and disposal of materials and debris.

Limits of Work: The Resident and the Contractor will locate in the field the locations and limits of work to which the Drawing details and quantities will be applied.

Materials: Crack Repair, epoxy injection of cracks, material shall conform to the following requirements:

1.	Compressive Properties (ASTM D-695) at 28 days	
	a. Compressive Strength:	10,000 psi min
	b. Modulus of Elasticity:	300,000 psi min
2.	Tensile Properties (ASTM D-638) at 14 days	
	a. Tensile Strength:	7000 psi min
	b. Elongation at Break:	3-5%
	c. Modulus of Elasticity:	340,000 psi min
3.	Flexural Properties (ASTM D-790) at 14 days	
	a. Flexural Strength (Modulus of Rupture):	12,000 psi min.
	b. Tangent Modulus of Elasticity in Bending:	300,000 psi min
4.	Shear Strength (ASTM D-732) at 14 days:	4500 psi min
5.	Total Water Absorption (ASTM D-570) at 7 days:	1.5% max. (2 hour
6.	Bond Strength (ASTM C-882) Hardened Concrete to	
	a. 2 day (dry cure):	2800 psi min
	b. 14 day (moist cure):	2000 psi min
7.	Deflection Temperature (ASTM D-648) at 14 days:	
	104F min (fiber stress loading = 264 psi)	
8.	The epoxy resin adhesive shall conform to ASTM C-881, and AASHTO M235-90.	
9.	The epoxy resin adhesive shall be approved by the United States Department of Agriculture.	

Submittals Submit manufacturer's literature and certified test data from independent testing laboratories for all specified materials. Test data shall verify materials comply with referenced standards and physical and performance properties. Testing shall incorporate the material properties indicated on the Drawings for the existing concrete structure.

Submit samples when requested by the Resident.

Submit certificates of material compatibility as specified herein.

Compatibility: The epoxy injection material, corrosion inhibiting admixture, corrosion inhibiting impregnation coating, concrete protective coating, bonding material, if required, shall be compatible with each other. A letter of compatibility must be issued from the suppliers of the material.

Delivery, Storage and Handling Epoxy Injection of Cracks materials and accessories shall be in original unopened packages, clearly labeled with the manufacturer's identification and printed instructions. Store and handle in accordance with the recommendations of the manufacturer.

Environmental Conditions Refer to manufacturer's literature for any physical or environmental limitations.

Construction Methods:

1. The Resident shall locate in the field, locations and limits of concrete restoration as specified herein and as shown on the Drawings.
2. Repairs will be classified by the Resident, as vertical, overhead or horizontal for proper application purpose.
3. Provide safe access at all repair locations to the Resident.

Epoxy Injection of Cracks

1. Surface preparation and crack preparation: Surface must be clean and sound. Clean the cracks. Remove dust, dirt, debris, oil, laitance, grease, curing compound, impregnations, waxes and other bond inhibiting materials and materials which will prevent epoxy penetration.
2. Use injection equipment as recommended by the material manufacturer. Set appropriate injection ports based on system used. Seal ports and cracks with materials specified by the crack filler material manufacturer. Inject full depth of cracks in strict accordance with manufacturer's written instructions.
3. Mix materials in strict accordance with manufacturer's instructions.
4. Clean Up: Clean equipment and adjacent surfaces as recommended by material manufacturer.
5. Remove injection ports and sealing materials from surfaces of concrete as otherwise directed by the Resident. Grind surface smooth. Clean concrete surface to match adjacent concrete.

Manufacturer’s Field Representative

The Contractor shall arrange with the materials manufacturer or distributor to have the services of a competent field representative at the work site prior to any mixing of components to instruct the work crews in the proper mixing and application procedures.

He shall remain at the job site after work commences and continue to instruct until he and the Contractor, Inspector and/or Engineer are satisfied that the crew has mastered the technique of installing the system successfully. The representative shall make periodic visits to the project as the work progresses and shall confer on each visit with the Contractor, Inspector and/or Engineer.

The manufacturer's field representative must be fully qualified to perform the work and shall be subject to the approval of the Engineer.

The Contractor shall be completely responsible for the expense of the services of the required field representative and the bid contract price shall be full compensation for all costs in connection therewith.

Method of Measurement:

Crack Repair will be measured by the calculated Linear Foot of crack repairs complete in place.

1. Measurements and calculations of crack length will be made by the Resident in the field from one side of the surface only.
    a. A crack may or may not propagate completely through the concrete element. The full depth of the crack shall be repaired. No differentiation will be made based on crack depth for measurement and payment purposes.
2. The Resident will measure the crack in an essentially linear fashion and will not consider short, jagged changes in crack direction.
3. The measurements and calculations made by the Resident will be used for payment purposes.
4. Additional repair materials used to repair defective work, waste materials and materials required because Contractor exceeds authorized repair limits will not be measured for payment.

Basis of Payment:

The accepted quantity of Crack Repair will be paid for at the Contract unit price per Linear Foot complete in place which price shall include all work associated with the repair including but not limited to removal and disposal of loose and deteriorated concrete and other debris, surface preparation, materials removal and disposal, injection ports, crack sealer, and removal of ports and surface sealer after repair work is completed and all materials, equipment, tools and labor incidental thereto.

Payment will be made under:

Pay Item	Pay Unit
518.80 Crack Repair	LF

SPECIAL PROVISION
SECTION 520
EXPANSION DEVICES -- NON MODULAR
(Asphaltic Plug Joint)

520.01 Description

This work consists of furnishing and installing asphaltic plug joint systems at the locations shown on the Plans, in accordance with these Specifications or as directed by the Resident.

This work shall also include having the approved manufacturer provide a qualified technical representative(s) to supervise the installation of the joint systems. The representative(s) shall instruct, train and supervise the Contractor's personnel in the proper methods of installation. All costs associated with this service shall be included in the unit price of the work.

520.02 Submittals

Prior to construction, the Contractor shall submit the following to the Resident for review and approval:

(a) Complete and detailed Shop Drawings of asphaltic plug joint system. Shop Drawing shall include information covering materials, their properties, installation procedures, storage and handling requirements, and Materials Safety Data Sheets.

(b) The resume of the manufacturer's technical representative, which shall include the representative's experience installing the asphaltic plug joint system along with the names and telephone numbers of contact persons for recent projects where technical assistance was provided.

(c) Certified test reports of the asphaltic binder, closed cell foam backer rod and the plastic compound.

(d) Certificates of Compliance for bridging plates, centering nails, and aggregate.

520.03 Materials

The asphaltic plug joints shall consist of a system including bridge joint binder material, aggregate, backer rod, bridging plate, elastomeric concrete header material and

polysulfide joint sealant conforming to the details and dimensions shown on the Plans, in accordance with these Specifications and as directed by the Resident.

The following systems are acceptable for use as asphaltic plug joints:

Thorma-Joint	Polyjoint	Koch BJS
Linear Dynamics, Inc. 400 Lannidex Plaza Parsipanny, NJ 07054	A.H. Harris 321 Ellis Street New Britain, CT 06050	Koch Materials Company P.O. Box 510 Stroud, OK 74079

Materials which are incorporated in or used in conjunction with approved asphaltic plug joint systems are as follows:

(a) Asphaltic Binder:

Binder shall meet or exceed requirements of AASHTO M301 (ASTM D3405) and consist of a hot applied, thermoplastic polymeric modified asphalt with the following properties when tested in accordance with the following ASTM methods:

PROPERTY	REQUIREMENT	TEST METHOD
Softening Point, °F	180 min.	ASTM D36
Tensile Adhesion @ 77°F, %	800 min.	ASTM D3583
Ductility @ 77°F, inch	16 min.	ASTM D113
Penetration, 0.1 mm 77°F, 150 g, 5 s 0°F, 200 g, 60 s	 90 max. 10 max.	ASTM D3407
Flow 5 hrs @ 140°F, mm	3.0 max.	ASTM D3407
Bond @ -20°F	pass 3 cycles	ASTM D3407
Resilience @ 77°F, %	60 min.	ASTM D3407
Asphalt Compatibility @ 140°F	pass	ASTM D3407
Recommended Pouring Temperature, °F	380 to 390	
Safe Heating Temperature, °F	410	

(b) Backer Rod:

Backer rod shall be a cylindrical closed cell expanded polyethylene foam rod, with a diameter of 150 percent of joint opening width, capable of withstanding the temperature of the hot binder materials and having the following properties:

PROPERTY	REQUIREMENT	TEST METHOD
Density, lb/ft^3	2.0 min.	ASTM D1622
Tensile Strength, psi	25 min.	ASTM D1623
Water Absorption, % of wt.	1.0 max.	ASTM C509

(c) Bridging Plate:

Bridging plate shall be ASTM A36 steel, minimum of 1/4 inch thick and galvanized. Holes for the centering nails shall be approximately one foot center to center along the centerline of plates.

(d) Centering Nail:

Nail shall be 16d or larger and hot dip galvanized in accordance with ASTM A153.

(e) Aggregates:

Aggregate shall be crushed, double-washed and dried granite or basalt and meeting ASTM C 33 Size No. 6 gradation. This aggregate shall also be used for top dressing on the finished joints.

(f) Plastic Compound:

Plastic compound used for repairing overcuts in bituminous concrete overlays shall be a two-component liquid with a synthetic resin base. It shall have a minimum viscosity of 3,500 cps at 77°F and a maximum viscosity of 65,000 cps at 25°F. The plastic compound shall be cured by the addition of a specific hardener. Sufficient hardener shall be used to cure the plastic compound in approximately 30 minutes at 77°F. It shall have sufficient strength and resiliency to withstand stresses set up by vibration, expansion and contraction due to temperature changes. It shall also be resistant to most chemicals and solvents, including most salts, acids, and hydrocarbons.

520.04 Installations

Asphaltic plug joint system shall be installed in accordance with manufacturer's latest instructions and specifications. Manufacturer's representatives shall be present during entire installation to ensure satisfactory results are obtained.

Asphaltic plug joint system shall allow total joint movement for up to two inches. The installation shall be centered over the expansion joint gap as indicated on the Plans.

It shall not be installed when ambient or substrate temperatures are below 40°F, when rain is imminent or as directed by the Resident.

Sawcut and remove bituminous concrete overlay and waterproofing membrane to the required dimensions as shown on the Plans. If required, a leveling course shall be applied to concrete surfaces prior to placing bridging plates. Vertical surfaces of bituminous concrete overlay shall be cleaned to remove all water and cutting dust.

Backer rods shall be installed in expansion joint openings at a minimum of one inch depth as indicated on the Plans.

Binder shall be heated to a safe temperature as recommended by manufacturer. Heating kettles shall be equipped with continuous agitation system, temperature controller, calibrated thermometer and double steel jacket with an oil layer in between, to prevent scorching of the binder. During application, the temperature of binder shall be maintained at a minimum of 350°F. It shall be poured into expansion joint openings until it runs over edges.

Steel bridging plates shall be placed from curb to curb on the roadway portion of expansion joints. Plates shall be centered over joint openings. Centering nails shall be placed in pre-drilled holes and hammered in to secure plates.

Aggregate shall be heated in a rotating drum mixer to a minimum of 350°F or as recommended by the Engineer. The thermoplastic polymeric modified asphalt Binder shall be added to the mixer to precoat aggregates.

Coated aggregate shall be placed into blockouts in layers as recommended by the manufacturer. Blockouts shall be overfilled with coated aggregate as required to compensate for compaction. Equipment for compaction shall be as recommended by the manufacturer. Additional thermoplastic polymeric modified asphalt binder shall be screeded over the compacted joint to fill any surface voids.

Top dressing aggregate shall be applied per the manufacturer's recommendation.

Plastic compound shall be used for repairing overcuts in bituminous concrete. Cleaning, mixing and application shall be in conformance to the manufacturer's instructions.

Vehicular traffic may pass over finished joints two-hours after compaction or as recommended by the manufacturer.

520.05 Method of Measurement

Asphaltic Plug Joint system will be measured by the linear foot along the top surface of installed joints to the limits shown on the Plan. Preparation of surfaces for the proposed joint system including cutting, grinding and cleaning, will not be measured separately for payment, but shall be incidental to the Asphaltic Plug Joint.

520.06 Basis of Payment

Asphaltic Plug Joint system will be paid for at the Contract unit price per linear foot which price shall be full compensation for all labor, materials, equipment and incidentals required for furnishing and installing the Asphaltic Plug Joint system as shown on the Plans, in accordance with these Specifications or as directed by the Resident.

Payment will be made under:

Pay Item		Pay Unit
520.232	Expansion Device - Asphaltic Plug Joint	Linear Foot

SPECIAL PROVISION
SECTION 525
GRANITE MASONRY
(Repointing Granite Masonry)

525.01 Description. Work shall consist of furnishing all labor, material, and equipment necessary to repoint existing granite masonry where indicated on Contract Drawings and where directed by the Resident.

Mortar shall be machine mixed and proportioned as approved by the Engineer. Retempering of mortar will not be permitted.

Hand mixing of mortar may be permitted only for small quantities as approved by the Engineer.

No admixtures except for mortar coloring agents shall be permitted in the mortar without approval of the Engineer in writing. Color of mortar shall be as approved by the Engineer. Sample mixes of hardened mortar shall be submitted to the Engineer for approval if the Engineer requests it. The Engineer may direct that the color of mortar be varied if in his opinion it will improve the appearance of the masonry. However, color of mortar incorporated in work shall be the same and uniform. All mortar coloring agents shall be manufactured from minerals and light-fast, durable and resistant to alkali.

Use of calcium chloride is not allowed.

SECTION 525 - POINTING EXISTING STONE MASONRY

525.03 Construction Details. Repointing shall not be done when ambient temperature is 40 degrees F or below, nor when stone contains frost. Whenever possible, face joints shall be properly pointed before mortar sets. Joint shall be prepared for repointing by removing all loose and deleterious materials from existing joints. Face surfaces of stones shall not be smeared with mortar used in pointing.

Joints shall be thoroughly wet with clean water and filled with mortar as shown in Drawings. Mortar shall be well driven into joints and finished with an approved pointing tool. Wall shall be kept wet while pointing is being done, and in hot or dry weather, pointed masonry shall be protected from sun and kept wet for a period of at least three days after completion.

After repointing is completed and mortar has set, all showing surfaces shall be cleaned of loose mortar and cement stains.

Method of Measurement. The quantity of repointed granite masonry to be measured for payment will be the number of square feet measured in place along the exposed face of the newly repointed granite masonry surface. No deduction will be made for joints. The work shall include the removal of the existing brick masonry around the perimeter of the storm drain outfall in the south multi-use bridge abutment and the associated repair with new granite masonry to match the appearance of the existing abutment in order to conceal the storm drain.

Basis of Payment. The accepted quantity of repointed granite masonry will be paid for at the contract price per square foot. The payment will be full compensation for all labor, equipment, scaffolding, and other incidentals necessary to complete the work.

Payment will be made under:

Pay Item		Pay Unit
525.26	Repointing Granite Masonry	Square Foot

May 13, 2008
Supercedes June 24, 2004

SPECIAL PROVISION
SECTION 526
CONCRETE BARRIER
(Temporary Concrete Barrier)

Materials

Temporary concrete barriers must be connected in accordance with Standard Detail 526(02) except as indicated below:

The top of the rod may be hooked over the top connector instead of using the hex nut and washer.

SPECIAL PROVISION
SECTION 527
ENERGY ABSORBING UNIT
(ET-Plus System)

Description. This work consists of furnishing and installing an ET-Plus crash cushion as a permanent energy absorbing system in accordance with these specifications at location(s) shown on the plans or established by the Resident.

Materials. The energy absorbing system shall be the NCHRP 350 test level 3 ET-Plus System as manufactured by Trinity Highway Products as approved and crash tested by the Federal Highway Administration.

Installation. A set of installation drawings shall be provided to the Resident for the system installed. The system shall be installed in accordance with the manufacturer's recommendations and the installation drawings.

Method of Measurement. Energy absorbing units will be measured by each unit, complete, in place and accepted.

Basis of Payment. The accepted quantity of energy absorbing units will be paid for at the contract unit price, such payment being full compensation for all labor, equipment, materials, and incidentals for furnishing and installing the system.

Payment will be made under:

Pay Item	Pay Unit
527.3031 Energy Absorbing System (ET-Plus)	Each

SPECIAL PROVISION
SECTION 530
(Prefabricated Steel Truss Bridge)

530.01 Description Work under this item shall be in conformance with the applicable portions of Section 504 of the Standard Specifications. The work under this specification shall include furnishing and installing a Prefabricated Bridge Superstructure, including bridge bearings, hardwood timber decking, and ornamental railing, as shown on the Plans. The bridge superstructure shall be fully engineered according to the requirements contained herein. All necessary work and incidental items required to complete the installation and connections to the substructure (including bearings and anchor bolts) shall be included in this work.

The Prefabricated Bridge Superstructure shall meet the design and manufacturing requirements of the latest versions and interim revisions of the AASHTO LRFD Bridge Design Specifications for Highway Bridges, AASHTO LRFD Guide Specifications for the Design of Pedestrian Bridges, and State of Maine Department of Transportation Standard Specifications for Highways and Bridges, except as otherwise specified on the Plans or as stated below.

530.02 Materials

Steel

- All truss members shall be high strength, low alloy steel. The minimum thickness of all structural steel members shall be 5/16" nominal.
- Truss members to be galvanized shall be fabricated using ASTM A500 grade C cold-formed welded square and rectangular tubing (Fy = 50,000 psi) and/or high strength, low alloy, atmospheric corrosion resistant ASTM A847 cold-formed welded square and rectangular tubing (Fy = 50,000 psi) and/or ASTM A588, ASTM A242, ASTM A572, ASTM A 606 (Fy = 50,000 psi) and/or ASTM A36 (Fy = 36,000 psi) plate and structural steel shapes. Splice plates, if required, shall be ASTM A588. Steel members, fabrications and assemblies shall be Hot Dip Galvanized in accordance with ASTM A123, after fabrication is completed.
- Steel members shall be finished with a dual coating system consisting of hot-dip galvanizing top coated with a two coat epoxy paint system. Galvanizing and painting shall be shop applied and conform to the requirements of Special Provision Section 506 (Shop Applied Protective Coating – Steel).
- All structural steel with calculated tensile stresses shall meet a Charpy-V-Notch (CVN) value of 15 foot-pounds at 40 degrees Fahrenheit. CVN testing shall be in accordance with AASHTO T 243 (ASTM A 673). The H frequency shall be used.
- All structural steel field connections shall be bolted with high strength bolts. High strength bolts, nuts, and plain hardened washers shall conform to the requirements of ASTM A 325. Fasteners shall be galvanized steel coated in accordance with ASTM A 153. Retap nuts after galvanizing.
- Anchor bolts and nuts supplied shall conform to ASTM F 1554 with a minimum yield strength of 55 ksi. Anchor bolts shall be supplied with 2 heavy hex nuts and 2 hardened

washers and unless otherwise specified the anchor bolts shall have a 90 degree bend with a 150 mm (6 inch) minimum leg length at the lower end. The anchor bolts, nuts and hardened washers shall be hot-dipped galvanized to ASTM A 153. After galvanizing, the nuts shall be retapped oversize by an amount appropriate to the nut size.

Wood Decking

All decking shall be full thickness planks unless approved otherwise. Wood decking shall be naturally durable tropical hardwood (ipe or approved equal). All planks shall be partially air dried to a moisture content of 15% to 20%, and shall be supplied S4S (surfaced four sides), E4E (eased four edges), with the edges eased to a radius of 1/8". Measured at 30% moisture content, the width and thickness shall not vary from specified dimensions by more than ± 0.04 inches. All planks shall be supplied with the ends sealed with an aqueous wax log sealer.

All planks shall be graded as FEQ-CAH (First Export Quality -Clear All Heart) grading rules, defined as follows:

- Lumber shall be graded both faces and both edges.
- Lumber shall be straight grained, maximum slope of grain to be 1:10.
- Lumber shall be parallel cut without heart centers or sap wood.
- Lumber shall be in sound condition, free from worm holes or knots.
- Allowable Imperfections are:
  All faces: Natural drying checks; discoloration caused by weathering or chemical reaction; bow or spring which can be removed using normal installation methods and tools.
- Imperfections Not Allowed:
  Longitudinal heart cracks; internal cracks; firm or soft sap wood; splits; end splits; ring shades; fungi effects (blue to gray, brown to red, white to yellow, or incipient decay); deformation (twisting or cupping) which cannot be removed using normal installation methods and tools.

All planks shall meet or exceed the following mechanical properties (based on the 2" standard) as defined by the U.S. Forest Products Laboratory publications and testing data:

MC%	Modulus of Rupture	Modulus of Elasticity	Max. Crush Strength
12%	22,360 psi	3,140,000 psi	13,010 psi

Janka side hardness is 3680 lbs. at 12% moisture content
Average air-dry density is 66 to 75 pcf.
Basic specific gravity is 0.85 - 0.97.

All planks shall be naturally fire resistant without the use of any fire resistant preservatives to meet NFPA Class A and UBC Class I.

Planks shall be supplied that meet or exceed the Static Coefficient of Friction for both Neolite and leather shoes in accordance with ASTM Test Method C1028-89.

FORCE IN POUNDS

SHOE MATERIAL	DRY	WET
Neolite	0.73	0.69
Leather	0.55	0.79

For transverse wood decking, axle loads shall be assumed to act on one plank only. The resultant wheel loadings described in Section 530.033 of this specification shall be distributed on the plank along a length equal to the tire print width (W, or 10”). The plank shall be designed for shear and bending in accordance with the support conditions and spacing. For design, the following allowable values shall be used:

Allowable Bending = 3,700 psi
Allowable Shear = 320 psi
Modulus of Elasticity = 3,000,000 psi

Bridge Railing

The multi-use bridge shall be supplied with steel ornamental railing with wood handrail and wood railing guard along the full length of both sides of the bridge. The railing shall be Ornamental Pedestrian Railing fabricated and constructed in accordance with Special Provision Section 507.

The timber hand railing shall be continuous over the multi-use bridge as noted in the plans. The railing system shall accommodate movement of the bridge structure by not spanning between the end of the bridge and the City concrete plaza slab, but rather terminating the railing panels projecting from each corner of the bridge against the adjacent railing panels connected to and extending from the plaza slab. The gap between the bridge and plaza rail panels shall be 3” maximum and 1” minimum; the ambient temperature at the time of railing installation (and position of the multi-use bridge relative to the plaza slab) shall be considered during ornamental railing fabrication and installation.

530.03 Construction Requirements

530.031 Qualification of Fabricator Bridge(s) shall be fabricated by a fabricator who is currently certified by the American Institute of Steel Construction to have the personnel, organization, experience, capability and commitment to produce fabricated structural steel for Major Steel Bridges with Fracture Critical Endorsement as set forth in the AISC Certification Program. Quality control shall be in accordance with procedures outlined for AISC certification.

Qualified suppliers must have at least 5 years of experience fabricating these type structures. Pre-approved Manufacturers:

1. CONTECH Bridge Solutions Inc.
   4021 Gault Avenue South
   Fort Payne, AL 35967

2. Excel Bridge Manufacturing Co.
   120001 Shoemaker Avenue
   Santa Fe Springs, CA 90670

3. Big R Bridge
   P.O. Box 1290
   Greeley, CO 80632-1290

4. Or approved equal

Qualifications of suppliers shall be submitted for approval prior to starting all work. The Contractor shall provide the following information for any proposed supplier:

- Product Literature
- All documentation to insure the proposed substitution will be in compliance with these specifications. This shall include:
  - Representative design calculations
  - Representative drawings
  - Splicing and erection procedures
  - Warranty information
  - Inspection and Maintenance procedures
  - AISC Shop Certification
  - Welder Qualifications
- Proposed suppliers must have at least five (5) years experience designing and fabricating these type structures and a minimum of five (5) successful bridge projects, of similar construction, each of which has been in service at least three (3) years. List the location, bridge size, owner, and a contact for reference for each project.

The Engineer will evaluate and verify the accuracy of the submittal prior to approval. If the Engineer determines that the qualifying criteria have not been met, the Contractor's proposed supplier shall be rejected. The Engineer's ruling will be final.

530.032 Bridge Requirements The bridge length shall be 100’-0" (straight line dimension) and shall be as measured from centerline of bearing to centerline of bearing. The overall bridge length shall be designed to fit within the existing substructure units with proposed modifications shown in the Plans and shall provide adequate tolerance for thermal movement. Bridge width shall be 10'-0" and shall be as measured from the inside face of the railing at deck level. The following provisions also apply:

- Bridge style shall be a single span, Bowstring Truss type as manufactured by the selected fabricator. Truss to consist of a continuous top chord cambered on a smooth radius with intermediate vertical members at the interior bottom chord panel points and one diagonal per panel. All vertical members shall be plumb.
- Gusset plates to be designed to adequately transfer member stresses at panel points. All gusset plate corners shall have a 1" radius.
- Bridge shall be designed utilizing a nested floor beam (floor beam to fit within the trusses) as shown on the Plans.
- Hardwood plank decking shall be orientated with the centerline of the board perpendicular to the bridge centerline.
- The distance from the top of the deck to the top and bottom truss members shall be determined by the bridge manufacturer based upon structural and/or shipping requirements. The minimum low chord elevation shall be as shown in the plans. Existing abutment modifications are based upon 2'-9" from top of deck to top of bearing surface. Adjustments shall be made to bearing seat elevations to accommodate the superstructure if actual dimensions vary. Adjustments of more than six (6) inches require the approval of the Engineer.
- The top of the top chord at midspan of the structure shall not be less than 8ft-0in above the deck, nor greater than 12ft-0in above the deck (as measured from the high point of the walking surface), unless additional height is specifically requested by the bridge manufacturer and approved by the Engineer.
- All members of the vertical trusses (top and bottom chords, verticals and diagonals), as well as other structural members and bracing, shall be fabricated from structural steel shapes. Square and/or rectangular structural steel tubing may also be used if details for galvanizing (such as ventilation ports and drain holes) are included in the design of members. To provide lateral support for the top flange of open shape stringers (w-shapes or channels), a minimum of one stiffener shall be provided in each stringer at every floor beam location.
- Ornamental pedestrian railing shall be installed along the full length of the bridge, on the inside of the structure, as shown on the plans. The railing shall be fastened to the floor framing by welding or mechanical connection with components galvanized in accordance with ASTM A 153. The railing and all connections shall be designed for an infill loading of 200 pounds, applied horizontally at right angles, to a one square foot area at any point in the system. All railing panels shall be fabricated and installed so as to prevent a 4" sphere from passing through the rail system.
- Expansion joints/sliding plates shall be provided at both ends of the bridge to provide a uniform, even transition from the bridge surface onto the bridge approaches.
- The bridge top and bottom chords shall have a vertical camber dimension at midspan equal to 100% of the full dead load deflection plus 2 ½ inches.

Installation of hardwood decking shall be in accordance with recommendations provided by the manufacturer/provider. In the event of a conflict in installation methods, the recommendations of the manufacturer/provider shall take precedence over the information provided herein. At

time of installation, planks are to be placed tight together with a maximum gap width of approximately 1/16". Every plank must be attached with at least one fastener at each end, and a minimum of two fasteners at a location approximately near the center of the bridge width. All fasteners to be zinc plated stainless steel. Self-tapping screws or hex-head bolts, with a steel plank holddown, are to be used at the ends of planks. Self-tapping screws or carriage bolts are to be used as interior connection fasteners when required. Power actuated fasteners will not be allowed. Planks are to be drilled prior to installation of bolts and/or screws.

In addition to at least one fastener at each end of every plank (typical for all installations), planks for bridges shall be attached with a minimum of two fasteners at a location approximately near the center of the bridge width.

NOTE: Attachments at the ends of the planks may be modified as required when obstructions, such as interior girder elements prevent installation of the specified hold-down system.

530.033 Design Requirements The bridge structure and bearings shall be designed and signed by a Professional Engineer licensed in accordance with the State of Maine Regulations. Design shall meet the requirements of the latest versions and interim revisions of the AASHTO LRFD Bridge Design Specifications, and AASHTO Specifications for Design of Pedestrian Bridges. Hardwood plank decking shall be designed in accordance with the ANSI/AF&PA NDS, "National Design Standard for Wood Construction", as published by the American Forest & Paper Association. The following design requirements shall also apply:

Utility support brackets for one 2" dia. electric conduit line and two 1" dia. electric conduit lines shall be designed, detailed and incorporated into the bridge structure. Utility supports shall be spaced at no more than 8'-0" on center. The minimum thickness of all steel components shall be 5/16".

Design Loads:

- Dead Loads: The bridge structure shall be designed considering its own dead load (superstructure and original decking), as well as ornamental lighting fixtures.
- Utility Load: The bridge shall be designed to support a single 2" dia. electric conduit line and two 1" dia. electric conduit lines for pedestrian lighting, and associated supporting elements, as shown on the drawings. The weight of the electric conduit lines, not including support brackets, may be taken as 5 plf.
- Pedestrian Loads: Pedestrian loading shall consist of a minimum uniform live load of 90 pounds per square foot.
- Vehicle Loads: Vehicle loading shall consist of a minimum total vehicle load of 10,000 lbs. The design vehicle shall have two axles, and the total vehicle load shall be uniformly distributed between each axle. Axle spacing shall be 67" and the width between outsides of wheels shall be 43". Wheel contact patch width shall be taken as 10". The vehicle loading shall not be placed in combinations with the pedestrian load.

- Concentrated Loads: A concentrated load of 1000 pounds placed on any area 2.5 ft x 2.5 ft square.
- Wind, snow, and seismic loading shall be in accordance with AASHTO Specifications and MaineDOT Bridge Design Guide.

Deflection:

- Vertical Deflection
  - Vertical deflection of the main trusses due to service pedestrian live load shall not exceed 1/500 of the span.
  - The deflection of the floor system members (floor beams and stringers) due to service pedestrian live load shall not exceed 1/360 of their respective spans.
- The horizontal deflection of the structure due to lateral wind loads shall not exceed 1/500 of the span under a 35 PSF wind load.

Welding

- Welding of bridge structure shall conform to Section 504 Structural Steel, AWS D1.l for tubular members, and ANSI/AASHTO/AWS D1.5 Bridge welding code for structural steel members with the following additional requirements:
- All fracture critical members shall be identified on Plans and Shop Drawings. Fracture critical members shall be welded in conformance with the minimum preheat and interpass temperatures specified in Tables 12.4 or 12.5 of AWS D1.5, or 200 degrees Fahrenheit provided wall thickness of members are ¾" or less. Filler metals shall meet the requirements of Tables 4.1,4.2, or 4.3 of AWS D1.5.
- Welding using the GMAW process with a single gas or gas mixture containing less than 80 percent Argon shall be considered a short-circuiting process and shall not be used in bridge components with calculated stresses.
- All non-destructive testing of welds shall conform to the requirements of Section 6, AWS D1.5 with the exception of complete groove welds in tubular butt joints. These welds shall be non-destructively tested in accordance with AWS Dl .1, Section 6.18.
- Welders shall be properly accredited operators, each of whom shall submit certification of satisfactorily passing AWS standard qualification tests for all positions with unlimited thickness of base metal, have a minimum of 6 months experience in welding tubular structures and have demonstrated the ability to make uniform sound welds of the type required.

530.034 Fabrication Unless addressed in this Special Provision, all structural steel and fabrication shall be in accordance with applicable sections of Standard Specifications 504 Structural Steel and 713 High Strength Bolts.

All splices, shop welded or otherwise shall not be placed within 15 feet of the midspan.

When the collection of water inside a structural tube is a possibility, either during construction or during service, the tube shall be provided with a drain hole at its lowest point to let water out.

530.035 Finishes The prefabricated multi-use bridge shall be galvanized and painted with a two-coat epoxy paint system in accordance with Special Provision Section 506, Shop Applied Protective Coating – Steel. The ornamental railing system shall be finished in accordance with Special Provision Section 506, Shop Applied Protective Coating – Steel and Special Provision Section 507 – Ornamental Pedestrian Railing. The finish color of the bridge and railing shall be Federal Standard 34062 or RAL6005, with the design intent of matching the green finish of the existing riverwalk railing.

530.04 Submittals The Contractor shall submit three (3) sets of Shop Drawings and Design Computations for the pedestrian bridge showing all details for the bridge fabrication to the Resident for review and approval. The shop drawings and design computations shall be prepared and stamped by a professional engineer licensed in the State of Maine. The calculations shall include all design information necessary to determine the structural adequacy of the bridge.

The following documentation shall also be submitted:

- The Contractor shall submit specifications for all materials and installation instructions.
- The Contractor shall submit the manufacturer's recommended maintenance program.
- The Contractor shall submit welding specification procedures for approval.
- The Contractor shall submit Certified Mill Test Reports (CMTR) indicating chemical and physical properties for all materials (including Charpy V-Notch test reports as required).
- The Contractor shall submit a detailed erection plan for review and approval. The erection plan shall identify proposed crane models and locations, pick weights, attachment points, and all other information deemed pertinent and relevant to the safe completion of the bridge erection. The erection plan shall be prepared by a professional engineer licensed in the state of Maine and submitted to the Resident for approval.
- The Contractor shall require the supplier to provide a construction advisor to assist the Contractor in the construction of the bridge. The actual construction of the bridge is the responsibility of the Contractor.

530.05 Delivery and Erection Delivery of the bridge shall be arranged by the supplier and Contractor. The Contractor shall notify and coordinate delivery and erection of the bridge with the Resident and the City of Westbrook's on-site representative.

530.06 Quality Assurance Inspections The Engineer, City of Westbrook or an independent inspector representing the City, will inspect various phases of the work to verify that work is in accordance with these specifications. Inspection of the work in the shop shall occur at up to three

(3) different phases of the manufacturing. The final inspection shall be prior to shipping. The Fabricator/Contractor shall provide certifications prior to shipping of the structure to the site.

The Fabricator/Contractor shall facilitate the inspection as required, allowing adequate time for inspections and providing access to the work together with all necessary safety equipment needed by the inspector to perform the inspections. The Fabricator/Contractor shall furnish and maintain in working order all equipment and instruments that are necessary to inspect all phases of the work.

530.07 Warranty The bridge manufacturer shall warranty their steel structure(s) to be free of design, material and workmanship defects for a period of ten years from the date of delivery. Hardwood timber wood plank decking and blocking (if required) shall carry a ten-year warranty against rot, structural damage from termites, and fungal decay wood.

530.08 Method of Measurement Prefabricated Bridge Superstructure shall be measured as a unit including designing, fabricating, and installing a bridge superstructure as shown on the Plans or as ordered. The prefabricated bridge shall include all hardwood timber decking, ornamental railing, bridge bearings, anchor bolts, attachments, hardware, and other incidentals required for complete installation of the Prefabricated Bridge Superstructure

530.09 Basis of Payment The installed and accepted Prefabricated Bridge Superstructure will be paid for at the contract lump sum price, complete in place. Such payment shall be considered full compensation for fabrication, shop drawings, coordination, delivery, and erection of the prefabricated bridge, including all materials, labor, equipment, and incidentals required to complete the work. Payment for existing substructure modifications and repairs are covered under separate pay items. Payment for the electrical conduit, hangers, and lighting on the bridge are covered under separate items.

Payment will be made under:

Pay Item	Pay Unit
530.01 Prefabricated Steel Truss Bridge, In Place	Lump Sum

SPECIAL PROVISION
SECTION 530
FRP Stay-in-Place Forms

Description: This work shall consist of furnishing (fabricating, storing, and delivering) and installing stay-in-place fiber reinforced polymer deck forms, to the dimensions and details shown on the plans and according to the requirements of the Standard Specifications and these Special Provisions. The FRP deck forms shall be pultruded fiberglass planks.

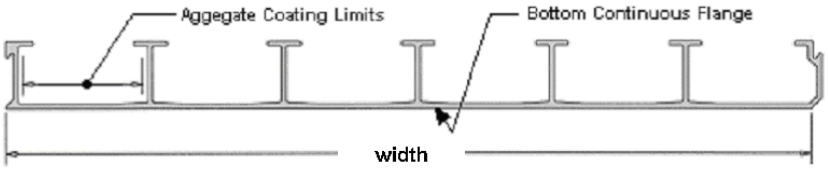

FIGURE 1 FRP PLANK CROSS-SECTION

Acceptable forms include:

a) SAFPLANK® (by Strongwell)
b) Approved equal

Demonstration Project: The Contractor's attention is called to the fact that the use of FRP Stay-in-Place Forms represents an experimental element on this project. Therefore, no substitutions or value engineering will be allowed on this item. This item shall include assistance and cooperation with Federal, State officials, and their representatives in the installation, maintenance, and monitoring of the deck forms before, during, and after installation. The Contractor shall plan and conduct their work accordingly.

In order to verify form panel deflections, the Contractor shall measure the stay-in-place form deflection after the concrete deck placement and before the curb, railing and wearing surface placement at the locations indicated in the Plans. Survey results shall be provided to the Resident.

Materials: Furnish FRP Deck Form (Stay-In-Place) in accordance with the following requirements.

Fibers: Use any commercial grade E-glass. The fiber may be in the form of unidirectional rovings or tows of any size or weight, or can be in the form of stitched, woven, braided or non-woven fabrics, or mats of any size or weight. Use appropriate fiber sizings and coupling agents for the resin system used. Contractor must report the manufacturer of the fiber itself, and the manufacturer of any fabrics or mats, to the

Resident.

Resins: Use any commercial grade vinylester thermosetting polymer. A vinylester resin is defined as a thermosetting reaction product of an epoxy resin with an unsaturated acid, usually methacrylic acid, which is then diluted with a reactive monomer, usually styrene (ASTM C904). Do not use a base polymer in the resin system that contains polyester. Blend vinylester resins, if desired. Report the manufacturer of the polymer resin. Styrene may be added to the polymer resin during processing. Report the amount of styrene, as a weight percentage of the polymer resin, added during processing. Added styrene must be less than 10% by weight of resin (pph resin).

Fillers: Use any commercial grade inorganic fillers such as kaolin clay, calcium carbonate, and alumina trihydrate that shall not exceed 20% by weight of the polymer resin constituent. Report the type and manufacturer of the inorganic filler. Use any commercial grade additives and process-aids, such as: release agents, low-profile shrink additives, initiators, promoters, hardeners, catalysts, pigments, fire-retardants, and ultra-violet inhibitors, as appropriate for the processing method. Shrink additives must be less than 10% by weight of the polymer resin. Use any commercial grade inorganic or organic non-woven surfacing mats or veils.

Structural Adhesives: The adhesive used in bonding the panels to the bridge beams shall be a two-component, medium viscosity, solvent-free methyl methacrylate or epoxy suitable for bonding plastics.

Acceptable products include:

a) Plexus MA560-1 as manufactured by ITW
b) Extreme 360M and Extreme 350M as manufactured by Extreme Adhesives
c) Weld On SS230 HV as manufactured by IPS Corporation
d) MES135G as manufactured by Momentive Performance Materials
e) Approved equal.

Manufacturing Process: Produce FRP materials using the pultrusion manufacturing process. Produce the FRP plank in 12-inch widths. Produce all FRP material parts provided to the job site using the same pultrusion die and in the same production lot. Report maximum internal pultrusion die temperature measured by thermocouple. Report the date of production and the lot size.

FRP Material Classification: Produce the pultruded FRP deck form of CLASS 2 FRP MATERIAL as described below. Compose the fiber architecture with layers of continuous E-glass roving and E-glass continuous filament mats (CFMs). Definitions of the total fiber volume fraction (expressed as a percent of the total material volume)

and the partial volume of continuous longitudinal fiber (expressed as a percent of the total fiber volume) along the longitudinal axis of the pultruded part (also called the 0 degree axis) are given for the specified class as follows:

CLASS 2 FRP MATERIAL will have a minimum total fiber volume fraction of 40% or greater and a minimum partial longitudinal fiber volume (relative to the total fiber volume) of 75% or greater.

Report items detailed above in a tabular form, as shown in TABLE 1, for the FRP materials produced.

TABLE 1 REPORTING REQUIREMENTS FOR CONSTITUENT MATERIALS OF FRP DECK FORM

ITEM	TYPE	MANUFACTURER	SPECIAL REQUIREMENTS
Fiber	E-glass roving type	E-glass roving manufacturer	NA
	E-glass fabric type(s)	E-glass fabric manufacturer	NA
	E-glass mat type	E-glass mat manufacturer type	NA
Veil	Surface veil type	Surface veil manufacturer	NA
Resin	Vinylester type(s)	Vinylester manufacturer	NA
	Styrene type	Styrene manufacturer	pph (less than 10 pph resin)
Filler	Filler type	Filler manufacturer	pph (less than 20 pph resin)
Additives	Shrink additive type	Shrink additive manufacturer	pph (less than 10 pph resin)
Process	Pultrusion die temperature	NA	NA
	Date of production	NA	NA
	Lot size	NA	NA

Physical and Mechanical Properties: Conduct physical and mechanical tests on coupons extracted from the bottom continuous solid flange of the as-produced FRP plank, as shown on the Plans, according to the ASTM tests listed in TABLE 2. Use a “test property laminate” in cases where the required size coupon can not be extracted from the cured part, provided it has the same fiber architecture as the laminate within the part, and is manufactured using the same processing method and under the same conditions as the part. For mechanical property measurements, condition specimens prior to testing (pre-conditioning) according to Procedure A of ASTM D618. For all mechanical property measurements, test no fewer than five (5) specimens. Report individual test data values, mean, and coefficient of variation for all tests. Report any deviations from standard test methods.

As-produced short-term average properties for CLASS 2 FRP MATERIAL, must meet or exceed the values shown in TABLE 2. Conduct the tests and provide a report

with data shown in TABLE 2, in standard US units.

TABLE 2 LIMITING PHYSICAL AND MECHANICAL PROPERTIES FOR FRP DECK FORM

MATERIAL PROPERTY	ASTM TEST	CLASS 2 FRP MATERIAL
Longitudinal Tensile Strength (min)	D3039, D5083, D638	50.0 ksi
Transverse Tensile Strength (min)	D3039, D5083, D638	4.0 ksi
Long. Short Beam Shear Strength (min)	D2344	4.5 ksi
Longitudinal Tensile Modulus (min)	D3039, D5083, D638	3.5 Msi
In-Plane Shear Modulus (min)	D5379	0.40 Msi
Full-Section Flexural Modulus (min)	**	2.8 Msi (48” span)
Total Fiber Volume Fraction (min)	D3171, D2584	40%
Partial Roving Volume Fraction (min)	D3171, D2584	75%
Barcol Hardness (min)	D2583	45
Glass Transition Temperature (min)	E1356, D3418	203°F (95°C)
Water absorption (max)	D570 (per sect. 7.7)	0.5 %

** tested over 3’-0” span

Conduct physical tests of the FRP plank to prove the plank’s ability to resist construction loads with limited deformation as described below:

1. A section of plank of at least 1 foot in width and 3’-6” in length comprises the test specimen. The test specimen, supported on flat end blocks, must have a demonstrated capability to resist 200 lbs of uniform load per square foot when spanning a clear distance of 3 feet.
2. The test specimen must also support a 250 lb. weight placed over a 4 in. by 6 in. rectangular area at the center of the 3 ft span.
3. The test specimen must have maximum stress in the FRP material limited to 50% of the longitudinal and transverse tensile strengths listed in TABLE 2 under the loadings above. The maximum vertical deflection of the specimen above must be limited to 0.25 in. under both of the specified loads.

Special Requirements: The Contractor must adhere to the following special requirements during fabrication. These requirements may be checked for approval in the field at the discretion of the Resident.

Aggregate Coating for Bond to Concrete: Apply a bonded aggregate to the upper surface of the entire plan area of the FRP plank or on the upper surface of the plank in the valleys between the ribs as shown in FIGURE 1. Supply type of aggregate, amount, and adhesive as indicated below.

1. Aggregate Size: Silica Sand - all pass #8 sieve and all remain on #14 sieve.

2. Cover 30% minimum of total surface.
3. Bonded with epoxy adhesive. Acceptable epoxy adhesives include:
   a. EPON 828 (by Momentive)
   b. Concresive 1090 (by Master Builders)
   c. Sikadur 300 (by Sika)
   d. Other approved sources

Supply a mock-up sample of a single deck form of the specified dimensions with the specified bonded sand aggregate for approval, prior to production of the required lot. Send the mock-up sample to the Resident to provide to the project Engineer of Record.

In the event that an alternative aggregate system is proposed, conduct full-scale reinforced concrete beam tests to demonstrate the equivalent bond performance to beams tested with the specified aggregate system as detailed in the technical paper "Pultruded FRP Plank as Formwork and Reinforcement for Concrete Structures," COMPOSITES 2006 Convention and Trade Show, American Composites Manufacturers Association, October 18-20, 2006, St. Louis, MO USA.

Dimensional Tolerance: Conform pultruded deck form panels to ASTM D3917.

Sealing of Cut Ends Seal all cut-ends of the pultruded deck form with an acceptable epoxy adhesive prior to installation.

Quality Assurance: As-delivered deck forms will be subjected to quality assurance testing to verify the properties reported by the manufacturer and to verify minimum engineering properties.

Supply one extra standard length deck panel for every 50 deck panels delivered to the site for the purposes of quality assurance testing. The Resident will take sample deck forms randomly from the material supplied.

Reporting Requirements: Report items detailed in TABLE 1 TABLE 2 and load test results of the plank test specimens as described in these special provisions. Sign, date and certify all test reports by an authorized representative. Provide two copies of the certified test reports at the time of material delivery.

Referenced ASTM Methods: Standards of the American Society of Testing and Materials referred to in this paper are listed below. All standards appear in the current annual edition of ASTM standards published by the American Society of Testing and Materials, West Conshohocken, PA.

C904 - Standard Terminology Relating to Chemical-Resistant Nonmetallic

Materials
D570 - Standard Test Method for Water Absorption of Plastics
D618 - Standard Practice for Conditioning Plastics for Testing
D638 - Standard Test Method for Tensile Properties of Plastics
D2344 - Standard Test Method for Short-Beam Strength of Polymer Matrix Composite Materials and Their Laminates
D2583 - Standard Test Method for Indentation Hardness of Rigid Plastics by Means of a Barcol Impressor
D2584 - Standard Test Method for Ignition Loss of Cured Reinforced Resins
D3039 - Standard Test Method for Tensile Properties of Polymer Matrix Composite Materials
D3171 - Standard Test Method for Constituent Content of Composite Materials
D3418 - Standard Test Method for Transition Temperatures of Polymers By Differential Scanning Calorimetry
D3917 - Standard Specification for Dimensional Tolerance of Thermosetting Glass-Reinforced Plastic Pultruded Shapes
D5083 - Standard Test Method for Tensile Properties of Reinforced Thermosetting Plastics Using Straight-Sided Specimens
D5379 - Standard Test Method for Shear Properties of Composite Materials by the V-Notched Beam Method
E1356 - Standard Test Method for Assignment of the Glass Transition Temperatures by Differential Scanning Calorimetry or Differential Thermal Analysis

Construction: At minimum, conform to the following construction requirements:

Field Handling and Storage: Keep all FRP materials clean, stored off the ground, and protected from excessive exposure to moisture with a waterproof ventilated covering. Anticipate early delivery of FRP deck forms. Note that lead-time for this material may exceed three months.

Cutting FRP Materials: Use a toothless chop disk or diamond-coated circular blade to cut any FRP materials. Seal all field cuts of the deck materials with an epoxy resin.

Securing FRP Deck Form System: Properly secure the FRP deck form system to ensure stabilization and prevention of wind uplift prior to concrete placement. The Resident will review and approve the method utilized by the Contractor for holding the forms in position. A suggested sealing procedure to prevent leakage of the wet concrete during casting is included in the Plans.

Deck Form Placement: Place deck forms perpendicular to the edges of the flanges of the Hybrid-Composite Beams, as shown in the contract drawings. The

deck forms must be clipped together along their longitudinal edges using the tongue and groove joints on the opposite edges of the deck forms (see FIGURE 1). The Resident will review and approve the method utilized by the Contractor for holding the forms in position.

Deck Form Cutouts: Any cutout openings through the deck form for a deck drain, or for other applications, will require the approval of the Resident.

Concrete Placement: Do not wet down deck forms; they must be dry of moisture prior to concrete placement. Pour concrete on to the deck forms such that the tongue-and-groove joints stay closed as the wet concrete is placed. (The "direction of pour" must be from RIGHT to LEFT relative to the deck form as shown in FIGURE 1, so that the wet concrete pushes down on the upper lip of the joint and does not permit the joint to open vertically.)

Method of Measurement: FRP Stay-in-Place Forms will be measured by the square foot of form in place, acceptably completed.

Basis of Payment: FRP Stay-in-Place Form will be paid for at the Contract unit price per square foot. Payment will be full compensation for all labor, materials, equipment and incidentals required for furnishing, installing, and bonding the forms as shown on the Plans, in accordance with these Specifications or as directed by the Resident.

Payment is full compensation for all Contractor material testing and extra panels for quality assurance; for fabricating and furnishing the deck forms with aggregate coating; and for furnishing all equipment, tools, labor, and incidentals necessary to supply the material to the construction site.

Payment will be made under:

Pay Item		Pay Unit
530.34	FRP Stay-in-Place Form	Square Foot

SPECIAL PROVISION
SECTION 602
FLOWABLE CONCRETE FILL

Description This work shall consist of providing and placing flowable concrete fill at the locations designated on the plans.

MATERIALS

Materials shall conform to the requirements specified in the following Subsections of Division 700 — Materials:

Portland Cement	701.01
Water	701.02
Air Entraining Admixtures	701.03
Fine Aggregate	703.01
FlyAsh	701.10
Water Reducing Admixtures	701.04
Accelerating Admixtures	AASHTO M-194 Type "C"

CONSTRUCTION REQUIREMENTS

Composition and Proportioning Flowable concrete fill shall be composed of a homogeneous mixture of Portland cement and/or pozzolans, fine aggregate, water, and chemical admixtures proportioned according to these specifications.

The flowable concrete fill shall be proportioned to produce a 28-day compressive strength of 760 kPa [110 psi].

The water cement ratio for flowable concrete fill shall not be high enough to cause segregation of the mix.

Air content of 5 to 15% is the target. Higher air contents may be acceptable but will increase set time. All flowable concrete fill shall be air entrained by the addition of an air entraining admixture or other chemical admixtures.

At least 30 days prior to the first placement, a flowable concrete fill mix design shall be submitted by the Contractor to the Department for approval. No flowable concrete fill shall be placed on the project until the mix design is approved by the Department. At a minimum, the mix design submitted by the Contractor shall include the following:

A. Target water cement ratio

B. Target strength

C. Target air content

Quality Control Process control measurements of air content, mix temperature, and slump shall be performed on the portion or portions of flowable concrete fill batches delivered to the site. At least one set of measurements for air content, temperature, and slump of flowable concrete fill mix shall be performed per placement or per day, whichever is less frequent. Test cylinders will not be required.

Air content shall be measured following the requirements of AASHTO T152 utilizing Type B equipment.

Slump shall be measured by Modified Slump Test as described below:

Apparatus:

Scoop, measuring tape, flat edge, 75 mm x 150 mm [3 in x 6 in] cylinder mold open at both ends, and a flat non-absorbent surface.

Procedure:

1. Set cylinder upright on flat non-absorbent surface.
2. Scoop representative sample of flowable concrete fill.
3. Fill the cylinder, with the sample in one lift without tamping. Strike off the top with the flat edge to form a level surface.
4. Clear any residue from around the bottom of the cylinder.
5. During a count of three seconds, lift the cylinder straight up allowing the sample to spread on the flat surface.
6. Measure the spread diameter to the nearest 15 mm [⅝ in]. A spread of 225-350 mm [9 to 14 in] is considered flowable.

Batching Measuring and batching of materials shall be performed at an approved batching plant, either commercial or otherwise.

Mixing and Delivery The Contractor shall provide a Certificate of Compliance as described in Standard Specification 502 Structural Concrete, Section 502.0501 Quality Control METHOD A, METHOD B and METHOD C for each truckload of flowable concrete fill.

Cold Weather Placement The requirements of Standard Specification 502 Structural Concrete, Section 502.08 Cold Weather Concrete, amended as follows, apply.

The Cold Weather Temperature Table does not apply to flowable concrete fill. The minimum concrete temperature as placed shall be 4.40°C [40 °F]. No housing framework or heating will be required when placed under approved cold weather conditions.

Forms and Containment Berms When necessary to contain flowable concrete fill within a defined area, berms shall be constructed of compacted granular material

Placing Flowable Concrete Fill Flowable concrete fill shall not be placed until forms and/or containment berms have been checked and approved. Flow able concrete fill shall not be placed under water. The method and sequence of placing flowable concrete fill shall be approved by the Department before any flowable concrete fill is placed. A

technical representative from the flowable concrete fill supplier shall be present during the initial placement.

All flowable concrete fill shall be placed before it has taken its initial set. Flow able concrete fill shall be placed in such a manner as to avoid separation and segregation of the mix.

Consolidation, tamping, and vibration is not required or allowed.

Flowable concrete fill shall be discharged directly from the truck into the space to be filled. The drop height of the flowable concrete fill shall be as low as practicable. Flow able concrete fill shall not flow down the vertical face of a trench causing erosion of the trench face.

Finishing and curing of flowable concrete fill is not required.

Flowable concrete fill placed will not be opened to traffic or covered with structural concrete or pavement for a minimum of 24 hours.

Method of Measurement Flow able concrete fill satisfactorily placed and accepted will be measured by the cubic yard, in accordance with the pay limits established, if such limits have been established, If the Contractor elects to omit forms, or berms, then any excavation or flowable concrete fill placed beyond the pay limits indicated on the Plans shall not be paid for, but shall be at the Contractor's expense. In the absence of pay limits, the Resident may use discretion to accept the delivered quantity as the measurement for payment.

Basis of Payment The accepted work done under flowable concrete fill will be paid for at the contract unit price per cubic yard. Payment will be full compensation for furnishing and placing flowable concrete fill, including all forms, berms, granular material, pumping, dewatering and necessary incidentals.

Payment will be made under:

Pay Item	Pay Unit
602.30 Flowable Concrete Fill	Cubic Yard

SECTION 603 - PIPE CULVERTS AND STORM DRAINS

603.01 Description This work shall consist of constructing or reconstructing pipe culverts and storm drains, in accordance with these specifications, the Standard Detail plans and in reasonably close conformity with the lines and grades shown on the plans or established.

The word "pipe" in these specifications shall include both round pipe and pipe arches..

603.02 Materials Meet Sections:

Joint Mortar	705.02
Flexible Gaskets	705.03
Flexible Culvert Polyvinylchloride (PVC) Pipe	706.08
Corrugated Steel, Metallic Coated Pipe	707.02
Corrugated Aluminum Alloy Pipe & Pipe Arches	707.06
Polymer Precoated, Galvanized Corrugated Steel	707.07
Pipe & Pipe Arches	
Aluminum Coated (Type 2) Corrugated Steel Pipe	707.10
Zinc-Coated (Galvanized) Corrugated Steel Pipe	707.11
Rigid Culvert	
Reinforced Concrete Pipe	706.02
Corrugated Polyethylene Pipe	706.06
Corrugated Polypropylene Pipe	706.10

Flexible culverts with a diameter of 48 inches or more shall have the ends cut to a partial bevel as called for on the plans. The cut ends of galvanized steel pipe shall be regalvanized or painted with a zinc aluminum paint conforming to Federal Specification TT-P-1561A or an approved equal.

Helical corrugated pipe shall be re-rolled to form angular corrugations on the ends.

The corrugated bands for connecting pipe with $2^2/_3$ inches by ½ inch corrugations shall be not less than 10½ inches wide.

Rigid culverts, designated to have the ends shaped to a partial bevel, shall be either cast or cut to the required shape and dimensions. In either case, the edges of the pipe shall be even and true with no exposed reinforcing.

603.03 Construction Requirements

603.031 General Culvert pipe and pipe arches shall be furnished under the following options unless otherwise specified.

Option I The Contractor shall furnish any of the following type of pipe under Option I:

Corrugated Steel, Metallic (zinc or aluminum) Coated Pipe
Reinforced Concrete Pipe
Corrugated Polyethylene Pipe
Corrugated Polypropylene Pipe
Any of the metal pipes allowed under Option III.

Option III The Contractor shall furnish any of the following types of pipe under Option III. (Corrugated pipe used under this option shall be adequate to equal the flow capacity of comparable smoothlined pipe):

Corrugated Aluminum Alloy Pipe
Polyvinylchloride (PVC) Pipe
Polymer-Precoated Galvanized Corrugated Steel Pipe
Reinforced Concrete Pipe
Corrugated Polyethylene Pipe
Corrugated Polypropylene Pipe

Within any single run of culvert pipe, including extensions of existing culverts, the type of pipe shall be the same unless otherwise specified or as directed by the Resident. In a closed drainage system, a run of culvert pipe shall be considered from catch basin to catch basin. In an open drainage system, a run of culvert shall be considered from inlet to outlet.

Option III polyvinylchloride (PVC) pipe shall only be used in closed drainage systems, between catch basins.

603.0311 Corrugated Polyethylene or Polypropylene Pipe for Option III If inspection by the Resident reveals an unsatisfactory installation, the Resident may direct the contractor to test installed Smooth Lined Corrugated Polyethylene or Polypropylene Pipe for Option III to ensure the vertical deflection does not exceed the maximum allowable deflection. Maximum allowable deflection shall be 5 percent of the sum of the nominal inside diameter minus a 1.5 percent undersize tolerance.

Deflection tests shall not be performed until at least 30 days after completion of installation and compaction of backfill. The pipe shall be cleaned and inspected for offsets and obstructions before testing.

For all pipes 24 inches and smaller, a mandrel shall be pulled through the pipe by hand to ensure the maximum allowable deflections have not been exceeded. The mandrel shall be certified by the Department prior to use. If the mandrel fails to pass through the pipe, the pipe will be deemed overdeflected.

For pipes greater than 24 inches, deflections shall be determined by a method submitted and approved by the Department. If a mandrel is selected, the minimum diameter and length and

other requirements shall conform to the dimensions and requirements stated below. If other methods are used the measurements shall meet the minimum mandrel diameter requirements.

Any overdeflected pipe shall be uncovered and if not damaged as determined by the Department shall be allowed for reinstallation. Damaged pipe shall not be reinstalled and shall be removed from the work site.

The mandrel shall be a rigid non-adjustable, odd numbered-leg (9 legs minimum) mandrel having an effective length not less than its nominal diameter and having a minimum diameter at any point along the full length as follows:

Nominal Size inches	Minimum Mandrel Diameter inches		
12	11.23		
15	14.04		
18	16.84		
24	22.46		
30	28.07		
36	33.69		
42	39.30		
48	44.92		
60	56.15		

When deflection testing reveals overdeflected pipe, all costs incurred by the Contractor including mandrel and deflection testing, reinstallation of pipe and delays shall be the responsibility of the Contractor. When deflection testing reveals satisfactory pipe, all costs for deflection testing will be paid for by the Department.

603.032 Excavation Trenches shall be excavated in accordance with the requirements of Section 206 - Structural Excavation and wide enough to allow joining the culvert and compacting the bedding and backfill material under and around the culvert. Unless otherwise designated, trench walls shall be as nearly vertical as possible and the trench width no greater than necessary for installation of the culvert.

603.04 Bedding Culverts, less than 42 inches in diameter, shall be bedded on a firm foundation of uniform density. After placing the culvert pipe, backfill material shall be placed along the bottom of the trench, thoroughly tamped against the lower portion of the pipe with special care taken not to move the bedded pipe.

For culverts 42 inches in diameter and larger, the bottom of the trench shall be compacted to uniform density and shaped to fit a template with reasonable closeness for at least 10 percent of the culvert's total height.

On all bedding, when bell and spigot pipe is used, the portion of trench at the joints shall be shaped to fit the bell.

603.05 Laying Culvert The Contractor shall not install nor backfill culverts between December 15th and April 1st without written permission. Installing shall begin at the downstream end of the culvert line. Bell or groove ends of rigid culverts shall be placed facing upstream.

Elliptically shaped culverts shall be placed with the major axis within 5 degrees of vertical. Elliptically reinforced concrete pipe shall be placed with the vertical axis, indicated by the manufacturer, within 5 degrees of vertical.

603.06 Joining Culverts The method of joining rigid culvert sections shall be such that the ends are fully entered and the inner surfaces are reasonably flush and even. Joints shall be made with portland cement mortar, portland cement grout, rubber ring gaskets, or flexible plastic gaskets.

The pipe ends shall be thoroughly cleaned before the joint is made. Mortared joints shall be made with an excess of mortar to form a bead around the outside of the culvert and finished smooth inside. For grouted joints, molds or runners shall be used to retain the poured grout.

Joints with rubber ring gasket or flexible plastic gasket shall be made in accordance with the manufacturer's recommended procedures.

When portland cement mixtures are used, the completed joints shall be covered to protect against drying.

Flexible culvert section and metal end sections shall be firmly jointed by coupling bands. These bands shall meet the same applicable requirements as the flexible culvert being joined.

603.07 Shop Strutting All flexible circular culvert pipe 48 inches in diameter and larger shall be elongated along the vertical diameter in accordance with one of the following two methods:

a) The pipe shall be elongated by the manufacturer after fabrication by increasing the diameter along the vertical axis approximately 3 percent with a corresponding decrease along the horizontal axis. The elongation shall be obtained by installing rods and tightening the rods, uniformly from end to end of the pipe, obtaining approximately one quarter of the required elongation each time throughout the length of the pipe.

The rods shall be ⅝ inch diameter threaded 7 inches at both ends with washers and nuts. The length of the rods shall be the diameter of the pipe plus 8 inches. The rods shall be placed on the horizontal axis of the pipe at 2 foot spacing and located halfway between the circumferential riveting. A block of soft wood 2 inches by 4 inches by 12 inches long, shall be placed over the rods at each end to provide contact against the outside of the pipe. The

long dimension of the blocks shall be parallel with the horizontal axis of the pipe. The rods shall be left in the pipe until the fill is completed and compacted, unless for some unusual condition their removal is ordered. The rods shall be removed by cutting from the inside adjacent to the pipe.

(b) The pipe shall be elongated by the manufacturer by increasing the diameter along the vertical axis approximately 5 percent with a corresponding decrease along the horizontal axis by applying sufficient pressure to the sides of the pipe after fabrication to produce the specified distortion. The elongation shall be maintained by drilling holes in the ends of the pipe sections and placing and tightening horizontal wires. After the pipe sections have been installed with coupling bands, the wires shall be removed.

Helically corrugated culvert sections shall be match marked before being elongated by the manufacturer or before the ⅝ inch diameter rods are installed.

603.08 Backfilling Culverts and Storm Drains After the pipe is installed, it will be inspected before any backfill material is placed. All pipe found to be out of alignment, unduly settled or damaged to the extent that full performance is impaired, shall be taken up and re-laid or replaced.

Trenches shall be backfilled in accordance with Section 206.03 and as follows. The backfill material shall be thoroughly rammed under the haunches of the pipe with power or pneumatic operated hand tampers. The remainder of the backfill shall be thoroughly compacted with power tampers or vibratory compactors or other approved equipment or combination of equipment.

When the top of the pipe is exposed above the top of the trench, the embankment material around the pipe shall be placed and compacted on each side of the pipe in the aforementioned manner described for backfilling trenches, for a width of 5 feet measured from the outside diameter of the pipe. Only that portion of the embankment on each side and top of the pipe, for a minimum distance of 15 inches measured from the outside diameter of the pipe, must be of material conforming to the requirements described for backfilling in Section 206.03. Backfill material beyond these limits may contain stones larger than 3 inches but no greater than the thickness of the layer being placed. The embankment construction around the pipe shall continue up to an elevation 15 inches above the top of the pipe. Beyond these limits, the embankment shall be placed and compacted in accordance with the embankment construction requirements specified for the work except where the induced trench method is called for on the plans.

When construction equipment is used or traffic is maintained the Contractor shall provide a minimum cover of 3 feet over all pipes, if possible. Whenever this cover extends above the subgrade the Contractor shall temporarily place earth, which shall be removed when necessary to complete the work in accordance with the plans, or as directed. Any deviation from this practice shall have prior approval.

603.09 Induced Trench Under this method, for designated rigid pipes only, the embankment shall be completed as specified above, to a height above the culvert equal to the vertical outside diameter of the pipe plus 1 foot. A trench, equal in width to the outside horizontal diameter of the pipe, shall then be excavated to within 1 foot of the top of the pipe. Trench walls shall be as nearly vertical as possible. Hay bales shall be used to fill the lower 1/4 to 1/3 of the trench. Construction of the embankment above shall then proceed in a normal manner. The trench shall be loosely filled with highly compressible soil.

603.10 Removing and Relaying Culverts The pipe shall be carefully removed from its existing location, transported to and installed in the new location in accordance with these specifications for the particular type of pipe involved. Pipe damaged by the Contractor shall be replaced with pipe of similar type by the Contractor without additional compensation.

New metal bands or joint material shall be supplied and installed when necessary.

603.11 Method of Measurement Culvert and storm drain pipe of the different types and sizes, both new and re-laid, will be measured by the length in linear feet along the invert, laid as directed, complete in place, and accepted. Pipe laid in excess of the authorized length will not be included.

When the ends of a pipe are sloped or skewed, the amount to be included for payment shall be the length along the invert of the pipe.

When elbows, tees, wyes, or other special fittings are required, each fitting shall be included for payment as 3 additional linear feet of the largest pipeline involved.

Inlet grate units will be measured by each unit installed, complete in place, and accepted.

Concrete pipe ties shall be measured per Group (2 ties per Group).

603.12 Basis of Payment The accepted quantities of pipe for culverts and storm drains will be paid for at the contract unit price per linear foot, for the types and sizes specified, complete in place.

No payment will be made for pipe ordered without written approval of the Resident when such pipe is not required to be installed for completion of the work.

Excavation for culverts and storm drains, including excavation below the pipe, for induced trench and for bedding and backfilling will be considered incidental, except as provided in Section 206 - Structural Excavation.

Whenever minimum cover material extends above the subgrade, removal of the cover material necessary to complete the work will not be paid for directly but shall be considered part of the work specified herein.

Coupling bands and joint material will not be paid for separately but shall be considered included in the unit bid price for the type of pipe being used or re-laid.

Existing culverts to be re-laid, salvaged, or wasted shall be removed and disposed of as directed. The excavation for removal of these culverts that is not paid for under other items or incidental to other items shall be paid for as Common Excavation.

Inlet grate units will be paid for at the contract unit price each for the size specified, complete in place.

The accepted quantity of concrete pipe ties will be paid for at the contract unit price per Group. Such payment will be full compensation for furnishing, installing, and all other necessary incidentals for satisfactory completion of the work. Any grout or mortar necessary to repair chipping shall be incidental to the installation of the pipe ties.

Payment will be made under:

Pay Item		Pay Unit
603.15	12 inch Culvert Pipe Option I	Linear Foot
603.16	15 inch Culvert Pipe Option I	Linear Foot
603.17	18 inch Culvert Pipe Option I	Linear Foot
603.18	21 inch Culvert Pipe Option I	Linear Foot
603.19	24 inch Culvert Pipe Option I	Linear Foot
603.20	30 inch Culvert Pipe Option I	Linear Foot
603.21	36 inch Culvert Pipe Option I	Linear Foot
603.159	12 inch Culvert Pipe Option III	Linear Foot
603.169	15 inch Culvert Pipe Option III	Linear Foot
603.179	18 inch Culvert Pipe Option III	Linear Foot
603.189	21 inch Culvert Pipe Option III	Linear Foot
603.199	24 inch Culvert Pipe Option III	Linear Foot
603.2009	27 inch Culvert Pipe Option III	Linear Foot
603.209	30 inch Culvert Pipe Option III	Linear Foot
603.2019	33 inch Culvert Pipe Option III	Linear Foot
603.219	36 inch Culvert Pipe Option III	Linear Foot
603.229	42 inch Culvert Pipe Option III	Linear Foot
603.239	48 inch Culvert Pipe Option III	Linear Foot
603.249	54 inch Culvert Pipe Option III	Linear Foot
603.259	60 inch Culvert Pipe Option III	Linear Foot
603.269	66 inch Culvert Pipe Option III	Linear Foot
603.279	72 inch Culvert Pipe Option III	Linear Foot
603.289	84 inch Culvert Pipe Option III	Linear Foot
603.30	21 inch span by 15 inch rise Pipe Arch Option III	Linear Foot
603.31	24 inch span by 18 inch rise Pipe Arch Option III	Linear Foot
603.32	28 inch span by 20 inch rise Pipe Arch Option III	Linear Foot
603.33	35 inch span by 24 inch rise Pipe Arch Option III	Linear Foot
603.34	42 inch span by 29 inch rise Pipe Arch Option III	Linear Foot

603.35	49 inch span by 33 inch rise Pipe Arch Option III	Linear Foot
603.36	57 inch span by 38 inch rise Pipe Arch Option III	Linear Foot
603.37	64 inch span by 43 inch rise Pipe Arch Option III	Linear Foot
603.38	66 inch span by 51 inch rise Pipe Arch Option III	Linear Foot
603.39	73 inch span by 55 inch rise Pipe Arch Option III	Linear Foot
603.40	81 inch span by 59 inch rise Pipe Arch Option III	Linear Foot
603.41	24 inch Reinforced Conc. Pipe Class IV	Linear Foot
603.42	30 inch Reinforced Conc. Pipe Class IV	Linear Foot
603.43	36 inch Reinforced Conc. Pipe Class IV	Linear Foot
603.44	42 inch Reinforced Conc. Pipe Class IV	Linear Foot
603.45	48 inch Reinforced Conc. Pipe Class IV	Linear Foot
603.46	54 inch Reinforced Conc. Pipe Class IV	Linear Foot
603.47	60 inch Reinforced Conc. Pipe Class IV	Linear Foot
603.48	66 inch Reinforced Conc. Pipe Class IV	Linear Foot
603.49	72 inch Reinforced Conc. Pipe Class IV	Linear Foot
603.55	Concrete Pipe Ties	Group
603.73	Remove and Relay Metal Pipe: _____	Linear Foot
603.7315	Remove and Relay 15 inch Metal Pipe	Linear Foot
603.7318	Remove and Relay 18 inch Metal Pipe	Linear Foot
603.7324	Remove and Relay 24 inch Metal Pipe	Linear Foot
603.733	Remove and Relay 30 inch Metal Pipe	Linear Foot
603.7336	Remove and Relay 36 inch Metal Pipe	Linear Foot
603.7348	Remove and Relay 48 inch Metal Pipe	Linear Foot
603.7372	Remove and Relay 72 inch Metal Pipe	Linear Foot
603.74	Remove and Relay Concrete Pipe: _____	Linear Foot
603.7415	Remove and Relay 15 inch Concrete Pipe	Linear Foot
603.7418	Remove and Relay 18 inch Concrete Pipe	Linear Foot
603.7421	Remove and Relay 21 inch Concrete Pipe	Linear Foot
603.7424	Remove and Relay 24 inch Concrete Pipe	Linear Foot
603.743	Remove and Relay 30 inch Concrete Pipe	Linear Foot
603.7436	Remove and Relay 36 inch Concrete Pipe	Linear Foot
603.7442	Remove and Relay 42 inch Concrete Pipe	Linear Foot
603.7448	Remove and Relay 48 inch Concrete Pipe	Linear Foot
603.7454	Remove and Relay 54 inch Concrete Pipe	Linear Foot
603.746	Remove and Relay 60 inch Concrete Pipe	Linear Foot
603.7472	Remove and Relay 72 inch Concrete Pipe	Linear Foot
603.75	6 inch Inlet Grate Unit	Each
603.76	12 inch Inlet Grate Unit	Each
603.77	15 inch Inlet Grate Unit	Each
603.78	18 inch Inlet Grate Unit	Each
603.79	21 inch Inlet Grate Unit	Each
603.80	24 inch Inlet Grate Unit	Each
603.81	30 inch Inlet Grate Unit	Each
603.82	36 inch Inlet Grate Unit	Each

706.10 Corrugated Polypropylene Pipe for Option I and Option III Culvert Pipe

Option I/III pipe and fittings shall conform to the requirements of AASHTO M 330 Type S (dual wall) or Type D (triple wall). All polypropylene pipe shall be smooth lined and shall meet the pipe stiffness requirements of AASHTO M 330. The manufacturing plants of polypropylene pipe shall participate annually in the National Transportation Product Evaluation Program (NTPEP) process for plastic pipe and resins which includes audits by the AASHTO Materials Reference Laboratory (AMRL). Plants shall be listed as "Compliant" on the NTPEP website and take immediate corrective action for any deficiencies found during audits. Continued compliance with all elements of the NTPEP/AMRL program and the Maine DOT manufactured Materials Verification Program will be required in order to continue supplying product to the Maine DOT.

SPECIAL PROVISION
SECTION 604
MANHOLES AND CATCH BASINS
(Special Catch Basin)

Description This work shall consist of installing plastic 6 inch round exterior drainage basins as shown on the plans and special details and as directed. Each drainage basin shall be complete with single or multiple inlets/outlets per Drawings, including grate, adapters and riser.

Materials Drainage basins shall be 6 inch round Spee-D® Basins as manufactured by NDS (1-888-726-1944; www.NDSPRO.COM). Catch basins and grates shall be one piece injection molded by NDS; they shall be uniform in quality, free from flashing, shrinkage, distortion, and other defects. Component parts shall fit together in a satisfactory manner. The material used in molded catch basins shall be polystyrene. Material used in the manufacture of molded grates shall be structural foam polyethylene with ultra-violet light inhibitors. The material used for riser shall be 6" PVC-SDR 35 sewer and drain pipe.

Construction Requirements Drainage basins shall be installed as per manufacture's recommendations and as directed. Inlet and outlet pipe elevations may vary with field conditions. Excavate hole deep enough for overall height of basin and grate, allowing 1-1/2" - 2" above finish grade within tree wells to allow for mulch and allow 2 inches minimum clear below underside of tree grate. Excavate the trench deep enough to accommodate 6" compacted crushed stone base. Install basin in hole on top of a firm base of crushed stone or subbase gravel. Connect pipe to basins, gradually sloping the pipe. Minimum slope of pipes shall be 1% or greater. Backfill trench and area around basin with subbase gravel or crushed stone (703.22, type C) according to required application according to Drawings. Pipe sections entering catch basins shall be firmly connected to the structure and not protrude inside basin wall. Upon completion of installation, drainage basins shall be cleaned of debris prior to final acceptance. Alterations to drainage basins must be approved by the Resident.

Method of Measurement Measurement shall be per each drainage basin, complete and accepted in place.

Basis of Payment The accepted quantity for drainage basins will be paid for at the contract unit price each. Payment will be full compensation for drainage basins, grates, cleaning, installation, all equipment, labor, materials and accessories necessary to satisfactorily complete the pay item. Backfill material within 6 inches around drainage basin consisting of crushed stone shall be incidental to underdrain construction (605.07) and/or subbase gravel shall be incidental to construction of concrete Plaza and not paid for separately.

Pay Item		Pay Unit
604.30	Special Catch Basin	Each

SPECIAL PROVISION
SECTION 605
UNDERDRAIN
(4" Underdrain Pipe)

Description. This work shall consist of the construction of underdrain laterals, using preforated pipe, crushed stone, geotextile, and aggregate subbase course gravel as shown on the Drawings and in reasonably close conformity with the lines shown on the Drawings or otherwise established.

Materials. The materials for the pipe shall conform to Subsections 605.02 and 605.021 of the Standard Specifications.

The geotextiles shall conform to the requirements of Subsection 722.02 Drainage Geotextile, of the Standard Specifications. Class A is specified.

Crushed stone shall conform to the requirements for crushed material, Underdrain, Type C, Subsection 703.22 of the Standard Specifications.

Backfill material above the crushed stone shall be aggregate subbase course gravel.

Construction Requirements. Subsections 605.03, 605.05, and 605.06 of the Standard Specifications shall be applicable.

605.04 Underdrain Lateral Construction. Underdrain lateral, Type B. The trench shall be excavated to the required width as shown on the Drawings and graded to provide a suitable surface on which to place the geotextile, crushed stone, and pipe. The 100 mm [4 inch] perforated pipe shall be placed on a bed of 150 mm [6 inch] of crushed stone in the geotextile lined trench. After the pipe has been firmly bedded and joints securely connected, it will be inspected before any backfill is placed. The pipe shall be backfilled with crushed stone to a depth of 150 mm [6 inches] above the top of the pipe and the geotextile folded over the top with a minimum overlap of 300 mm [12 inches]. The remaining backfill shall be aggregate subbase course gravel to match the existing gravel grade. This material shall be placed and compacted in 200 mm [6 inch] lifts. The upstream end of all completed underdrain laterals shall be sealed with cement mortar or other acceptable material. Care shall be taken that soil does not enter the pipe. Pipe contaminated before backfilling shall be removed, cleaned and relaid or replaced at no additional cost.

When the underdrain is being constructed, backfill material beyond the underdrain trench lateral limits designated on the Drawings shall be material conforming to the requirements of Granular Borrow, Underwater Backfill. The Contractor shall take precautions to prevent the underdrain backfill material from becoming contaminated with clays, silts, organic matter, or

other foreign matter. Methods of placing backfill material shall be limited to the use of equipment which will place material directly into the trench. Pushing material into the trench will not be allowed.

Method of Measurement. Underdrain laterals will be measured by the length in meters [feet] along centerline of the underdrains, complete in place, maintained, and accepted.

Basis of Payment. The accepted quantities of underdrain laterals will be paid for at the contract unit price per meter [foot] complete in place. Excavation for installing laterals, crushed stone, geotextile, aggregate subbase course gravel, couplings and bands, and other related items will not be paid for separately, but shall be considered included in the unit bid price for the underdrain laterals.

Pay Item		Pay Unit
605.07	4” Underdrain Pipe	Linear Foot

SPECIAL PROVISION
SECTION 606
GUARDRAIL

606.01 Description This work shall consist of furnishing and installing guardrail components in accordance with these specifications and in reasonably close conformity with the lines and grades shown on the plans or as established. The types of guardrail are designated as follows:

Type 3-Galvanized steel "w" beam, wood posts or galvanized steel posts.
Type 3a-Galvanized steel "w" beam, wood posts, wood or composite offset blocks.
Type 3aa-Corrosion resistant steel "w" beam, wood posts, wood or composite offset blocks.
Type 3b-Galvanized steel "w" beam, galvanized steel posts, galvanized steel offset blocks.
Type 3c-Galvanized steel "w" beam, wood posts or galvanized steel posts, wood or composite offset blocks.
Type 3d-Galvanized steel "w" beam, galvanized steel posts, wood or composite offset blocks.
Thrie Beam-Galvanized steel thrie beam, wood posts or galvanized steel posts, wood or composite offset blocks.

Median barriers shall consist of two beams of the above types, mounted on single posts. Except for thrie beam, median barriers may include rub rails when called for.

Bridge mounted guardrail shall consist of furnishing all labor, materials, and equipment necessary to install guardrail as shown on the plans. This work shall also include drilling for and installation of offset blocks if specified, and incidental hardware necessary for satisfactory completion of the work.

Remove and Reset and Remove, Modify, and Reset guardrail shall consist of removing the existing designated guardrail and resetting in a new location as shown on the plans or directed by the Resident. Remove, Modify, and Reset guardrail and Modify guardrail include the following guardrail modifications: Removing plate washers at all posts, except at anchorage assemblies as noted on the Standard Details, Adding offset blocks, and other modifications as listed in the Construction Notes or General Notes. Modifications shall conform to the guardrail Standard Details.

Bridge Connection shall consist of the installation and attachment of beam guardrail to the existing bridge. This work shall consist of constructing a concrete end post or modifying an existing endpost as required, furnishing, and installing a terminal connector, necessary hardware, and incidentals required to complete the work as shown on the plans. Bridge Transition shall consist of a bridge connection and furnishing and installing guardrail components as shown in the Standard Details.

606.02 Materials Materials shall meet the requirements specified in the following Sections of Division 700 - Materials:

Timber Preservative	708.05
Metal Beam Rail	710.04
Guardrail Posts	710.07
Guardrail Hardware	710.08

Guardrail components shall meet the applicable standards of "A Guide to Standardized Highway Barrier Hardware" prepared and approved by the AASHTO-AGC-ARTBA Joint Cooperative Committee, Task Force 13 Report.

Posts for underdrain delineators shall be “U” channel steel, 2.44m [8 ft] long, 3.72 kg/m [2 ½ lb/ft] minimum and have 9.5 mm [3/8 in] round holes, 25 mm [1 in] center to center for a minimum distance of 610 mm [2 ft] from the top of the post.

Reflectorized Flexible Guardrail Markers shall be mounted on all guardrails. A marker shall be mounted onto guardrail posts at the flared end treatment’s terminal and its tangent point, both at the leading and trailing ends of each run of guardrail. The marker’s flexible posts shall be grey with either silver-white or yellow reflectors (to match the edge line striping) at the tangents, red at leading ends, and green at trailing ends. Whenever the end treatment is not flared, markers will only be required at the end treatment’s terminal. These shall be red or green as appropriate. Markers shall be installed on the protected side of guardrail posts unless otherwise approved by the Resident. Reflectorized flexible guardrail markers shall be from the Maine DOT’s Approved Product List of Guardrail Material. The marker shall be grey, flexible, durable, and of a non-discoloring material to which 75 mm [3 in] by 225 mm [9 in] reflectors shall be applied, and capable of recovering from repeated impacts. Reflective material shall meet the requirements of Section 719.01 for ASTM D 4956 Type III reflective sheeting. The marker shall be secured to the guardrail post with two fasteners, as shown in the Standard Details.

Reflectorized beam guardrail (“butterfly”-type) delineators shall be mounted on all “w”-beam guardrail. The delineators shall be mounted within the guardrail beam at guardrail posts. Delineators shall be fabricated from high-impact, ultraviolet & weather resistant thermoplastic. Reflectorized beam guardrail delineators shall be placed at approximately 20 m [62.5 ft] intervals or every tenth post on tangents and at approximately 10 m [31.25 ft] intervals or every fifth post on curves. Exact locations of the delineators shall be as directed by the Resident. On divided highways, the left hand delineators shall be yellow and the right hand delineators shall be silver/white. On two directional highways, the right hand side shall be silver/white and no reflectorized delineator used on the left. All reflectors shall have reflective sheeting applied to only one side of the delineator facing the direction of traffic as shown in the Standard Detail 606(07). Reflectorized sheeting for guardrail delineators shall meet the requirements of Section 719.01.

Single wood post shall be of cedar, white oak, or tamarack, well seasoned, straight, and sound and have been cut from live trees. The outer and inner bark shall be removed and all knots trimmed flush with the surface of the post. Posts shall be uniform taper and free of kinks and bends.

Single steel post shall conform to the requirements of Section 710.07 b.

Single steel pipe post shall be galvanized, seamless steel pipe conforming to the requirements of ASTM A120, Schedule No. 40, Standard Weight.

Acceptable multiple mailbox assemblies shall be listed on the Department’s Approved Products List and shall be NCHRP 350 tested and approved.

The Guardrail 350 Flared Terminal shall be a terminal with a 1.2 m [4 ft] offset as shown in the Manufacturer's installation instructions.

Existing materials damaged or lost during adjusting, removing and resetting, or removing, modifying, and resetting, shall be replaced by the Contractor without additional compensation. Existing guardrail posts and guardrail beams found to be unfit for reuse shall be replaced when directed by the Resident.

606.03 Posts Posts for guardrail shall be set plumb in holes or they may be driven if suitable driving equipment is used to prevent battering and distorting the post. When posts are driven through pavement, the damaged area around the post shall be repaired with approved bituminous patching. Damage to lighting and signal conduit and conductors shall be repaired by the Contractor.

When set in holes, posts shall be on a stable foundation and the space around the posts, backfilled in layers with suitable material, thoroughly tamped.

The reflectorized flexible guardrail markers shall be set plumb with the reflective surface facing the oncoming traffic. Markers shall be installed on the protected side of guardrail posts. Markers, which become bent or otherwise damaged, shall be removed and replaced with new markers.

Single wood posts shall be set plumb in holes and backfilled in layers with suitable material, thoroughly tamped. The Resident will designate the elevation and shape of the top. The posts, that are not pressure treated, shall be painted two coats of good quality oil base exterior house paint.

Single steel posts shall be set plumb in holes as specified for single wood posts or they may be driven if suitable driving equipment is used to prevent battering and distorting the post.

Additional bolt holes required in existing posts shall be drilled or punched, but the size of the holes shall not exceed the dimensions given in the Standard Details. Metal around the holes shall be thoroughly cleaned and painted with two coats of approved aluminum rust resistant paint. Holes shall not be burned.

606.04 Rails Brackets and fittings shall be placed and fastened as shown on the plans. Rail beams shall be erected and aligned to provide a smooth, continuous barrier. Beams shall be lapped with the exposed end away from approaching traffic.

End assemblies shall be installed as shown on the plans and shall be securely attached to the rail section and end post.

All bolts shall be of sufficient length to extend beyond the nuts but not more than 13 mm [½ in]. Nuts shall be drawn tight.

Additional bolt holes required in existing beams shall be drilled or punched, but the size of the holes shall not exceed the dimensions given in the Standard Details. Metal around the holes shall be thoroughly cleaned and painted with two coats of approved aluminum rust resistant paint. Holes shall not be burned.

606.045 Offset Blocks The same offset block material is to be provided for the entire project unless otherwise specified.

606.05 Shoulder Widening At designated locations the existing shoulder of the roadway shall be widened as shown on the plans. All grading, paving, seeding, and other necessary work shall be in accordance with the Specifications for the type work being done.

606.06 Mail Box Post Single wood post shall be installed at the designated location for the support of the mailbox. The multiple mailbox assemblies shall be installed at the designated location in accordance with the Standard Details and as recommended by the Manufacturer. Attachment of the mailbox to the post will be the responsibility of the home or business owner.

606.07 Abraded Surfaces All galvanized surfaces of new guardrail and posts, which have been abraded so that the base metal is exposed, and the threaded portions of all fittings and fasteners and cut ends of bolts shall be cleaned and painted with two coats of approved rust resistant paint.

606.08 Method of Measurement Guardrail will be measured by the meter [linear foot] from center to center of end posts along the gradient of the rail except where end connections are made to masonry or steel structures, in which case measurement will be as shown on the plans.

Terminal section, low volume end, NCHRP 350 end treatments, reflectorized flexible guardrail marker, terminal end, bridge transition, bridge connection, multiple mailbox post, and single post will be measured by each unit of the kind specified and installed.

Widened shoulder will be measured as a unit of grading within the limits shown on the plans.

Excavation in solid rock for placement of posts will be measured by the cubic meter [cubic yard] determined from the actual depth of the hole and a hypothetical circle diameter of 600 mm [2 ft].

606.09 Basis of Payment The accepted quantities of guardrail will be paid for at the contract unit price per meter [linear foot] for the type specified, complete in place. Reflectorized beam guardrail ("butterfly"-type) delineators will not be paid for directly, but will be considered incidental to guardrail items. Terminal section, buffer end, NCHRP 350 end treatment, bridge connection, single post and reflectorized flexible guardrail markers will be paid for at the contract unit price each for the kind specified complete in place.

NCHRP 350 end treatments and low volume guardrail ends will be paid for at the contract price each, complete in place which price shall be full payment for furnishing and installing all components including the terminal section, posts, offset blocks, "w" beam, cable foundation posts, plates and for all incidentals necessary to complete the installation within the limits as shown on the Standard Details or the Manufacturer's installation instructions. Each end treatment will be clearly marked with the manufacturers name and model number to facilitate any future needed repair. Such payment shall also be full compensation for furnishing all material, excavating, backfilling holes, assembling, and all incidentals necessary to complete the work, except that for excavation for posts or anchorages in solid ledge rock, payment will be made under Pay Item 206.07. Type III Retroreflective Adhesive Sheeting

shall be applied to the approach buffer end sections and sized to substantially cover the end section. On all roadways, the ends shall be marked with alternating black and retroreflective yellow stripes. The stripes shall be 75 mm [3 in] wide and sloped down at an angle of 45 degrees toward the side on which traffic is to pass the end section. Guardrail 350 flared terminal shall also include a set of installation drawings supplied to the Resident.

Anchorages to bridge end posts will be part of the bridge work. Connections thereto will be considered included in the unit bid price for guardrail.

Guardrail to be placed on a radius of curvature of 45 m [150 ft] or less will be paid for under the designated radius pay item for the type guardrail being placed.

Widened shoulder will be paid for at the contract unit price each complete in place and will be full compensation for furnishing and placing, grading and compaction of aggregate subbase and any required fill material.

Adjust guardrail will be paid for at the contract unit price per meter and will be full compensation for adjusting to grade. Payment shall also include adjusting terminal end treatments where required.

Modify guardrail will be paid for at the contract unit price per meter and will be full compensation for furnishing and installing offset blocks, additional posts, and other specified modifications; removing, modifying, installing, and adjusting to grade existing posts and beams; removing plate washers and backup plates, and all incidentals necessary to complete the work. Payment shall also include removing and resetting terminal ends where required.

Remove and Reset guardrail will be paid for at the contract unit price per meter and will be full compensation for removing, transporting, storing, reassembling all parts, necessary cutting, furnishing new parts when necessary, reinstalling at the new location, and all other incidentals necessary to complete the work. Payment shall also include removing and resetting terminal ends when required. No payment will be made for guardrail removed, but not reset and all costs for such removal shall be considered incidental to the various contract pay items.

Remove, Modify, and Reset guardrail will be paid for at the contract unit price per meter and will be full compensation for the requirements listed in Modify guardrail and Remove and Reset guardrail.

Bridge Connections will be paid for at the contract unit price each. Payment shall include, attaching the connection to the endpost including furnishing and placing concrete and reinforcing steel necessary to construct new endposts if required, furnishing and installing the terminal connector, and all miscellaneous hardware, labor, equipment, and incidentals necessary to complete the work.

Bridge Transitions will be paid for at the contract unit price each. Payment shall include furnishing and installing the thrie beam or “w”-beam terminal connector, doubled beam section, and transition section, where called for, posts, hardware, precast concrete transition curb, and any other necessary materials and labor, including the bridge connection as stated in the previous paragraph.

Payment will be made under:

	Pay Item	Pay Unit
606.15	Guardrail Type 3a-Single Rail	meter [Linear Foot]
606.151	Guardrail Type 3aa-Single Rail	meter [Linear Foot]
606.17	Guardrail Type 3b-Single Rail	meter [Linear Foot]
606.1721	Bridge Transition - Type I	Each
606.1722	Bridge Transition - Type II	Each
606.1731	Bridge Connection - Type I	Each
606.1732	Bridge Connection - Type II	Each
606.178	Guardrail Beam	meter [Linear foot]
606.18	Guardrail Type 3b - Double Rail	meter [Linear foot]
606.19	Guardrail Type 3a - 4.5 m [15 ft] radius and less	meter [Linear Foot]
606.191	Guardrail Type 3aa - 4.5 m [15 ft] radius and less	meter [Linear Foot]
606.20	Guardrail Type 3a - over 4.5 m [15 ft] radius	meter [Linear Foot]
606.201	Guardrail Type 3aa - over 4.5 m [15 ft] radius	meter [Linear Foot]
606.21	Guardrail Type 3b - 4.5 m [15 ft] radius and less	meter [Linear Foot]
606.22	Guardrail Type 3b - over 4.5 m [15 ft] radius	meter [Linear Foot]
606.23	Guardrail Type 3c - Single Rail	meter [Linear Foot]
606.2301	Guardrail Type 3c - Double Rail	meter [Linear Foot]
606.231	Guardrail Type 3c - 4.5 m [15 ft] radius and less	meter [Linear Foot]
606.232	Guardrail Type 3c - over 4.5 m [15 ft] radius	meter [Linear Foot]
606.24	Guardrail Type 3d - Single Rail	meter [Linear Foot]
606.2401	Guardrail Type 3d - Double Rail	meter [Linear Foot]
606.241	Guardrail Type 3d - 4.5 m [15 ft] radius and less	meter [Linear Foot]
606.242	Guardrail Type 3d - over 4.5 m [15 feet] radius	meter [Linear Foot]
606.25	Terminal Connector	Each
606.257	Terminal Connector - Thrie Beam	Each
606.265	Terminal End-Single Rail - Galvanized Steel	Each
606.266	Terminal End-Single Rail - Corrosion Resistant Steel	Each
606.275	Terminal End-Double Rail - Galvanized Steel	Each
606.276	Terminal End-Double Rail - Corrosion Resistant Steel	Each
606.353	Reflectorized Flexible Guardrail Marker	Each
606.354	Remove and Reset Reflectorized Flexible Guardrail Marker	Each
606.356	Underdrain Delineator Post	Each
606.358	Guardrail, Modify, Type 3b to 3c	meter [Linear Foot]
606.3581	Guardrail, Modify Existing to Type 3d	meter [Linear Foot]
606.362	Guardrail, Adjust	meter [Linear Foot]
606.365	Guardrail, Remove, Modify, and Reset, Type 3b to 3c	meter [Linear Foot]
606.3651	Guardrail, Remove, Modify, and Reset Existing to Type 3d	meter [Linear Foot]
606.366	Guardrail, Removed and Reset, Type 3c	meter [Linear Foot]
606.367	Replace Unusable Existing Guardrail Posts	Each
606.47	Single Wood Post	Each
606.48	Single Galvanized Steel Post	Each
606.50	Single Steel Pipe Post	Each

606.51	Multiple Mailbox Support	Each
606.55	Guardrail Type 3 - Single Rail	meter [Linear Foot]
606.551	Guardrail Type 3 - Single Rail with Rub Rail	meter [Linear Foot]
606.56	Guardrail Type 3 - Double Rail	meter [Linear Foot]
606.561	Guardrail Type 3 - Double Rail with Rub Rail	meter [Linear Foot]
606.568	Guardrail, Modify Type 3c -Double Rail	meter [Linear Foot]
606.59	Guardrail Type 3 - 4.5 m [15 ft] radius and less	meter [Linear Foot]
606.60	Guardrail Type 3 - over 4.5 m [15 ft] radius	meter [Linear Foot]
606.63	Thrie Beam Rail Beam	meter [Linear Foot]
606.64	Guardrail Thrie Beam - Double Rail	meter [Linear Foot]
606.65	Guardrail Thrie Beam - Single Rail	meter [Linear Foot]
606.66	Terminal End Thrie Beam	Each
606.70	Transition Section - Thrie Beam	Each
606.71	Guardrail Thrie Beam - 4.5 m [15 ft] radius and less	meter [Linear Foot]
606.72	Guardrail Thrie Beam - over 4.5 m [15 ft] radius	meter [Linear Foot]
606.73	Guardrail Thrie Beam - Single Rail Bridge Mounted	meter [Linear Foot]
606.74	Guardrail Type 3 - Single Rail Bridge Mounted	meter [Linear Foot]
606.753	Widen Shoulder for Low Volume Guardrail End - Type 3	Each
606.754	Widen Shoulder for Guardrail 350 Flared Terminal	Each
606.78	Low Volume Guardrail End - Type 3	Each
606.79	Guardrail 350 Flared Terminal	Each

1. Reflectorized Flexible Guardrail Markers shall be from Maine DOT's Approved Product List of Guardrail Material.

2. Installation:
   a. Each bolt-hole diameter shall be the bolt diameter + 1/16".
   b. Wood post attachment - attach marker with 2, 5/16" diameter zinc-coated lag bolts, having 2" of embedment into wood post.
   c. Steel post attachment - attach marker with 2, 1/4" diameter zinc-coated bolt, washer and nut assemblies, having 1/2" of bolt extension behind steel post.
   d. When provided by the marker manufacturer, a stiffening pipe shall be inserted into the base of the marker prior to drilling bolt holes and shall remain in-place.

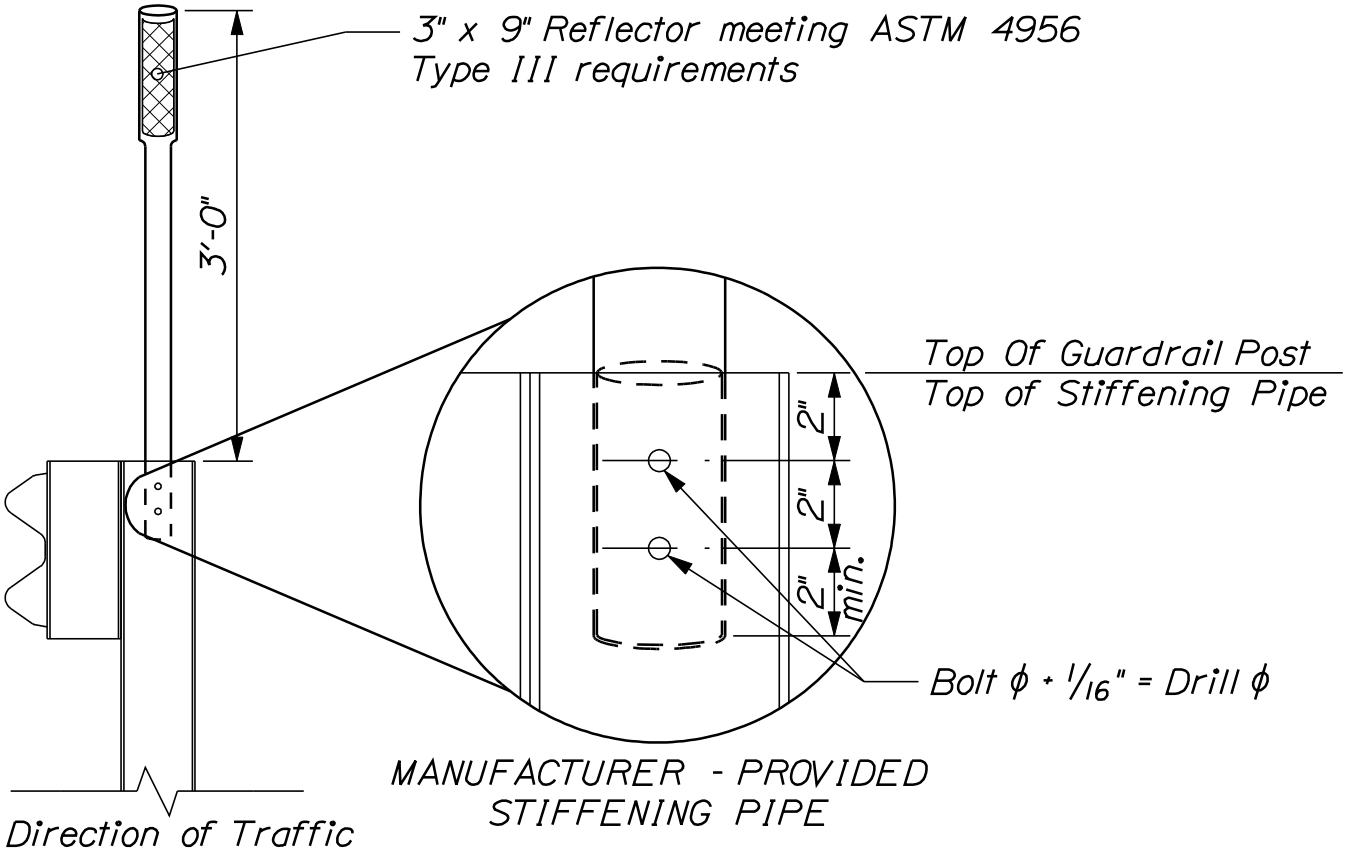

REFLECTORIZED FLEXIBLE GUARDRAIL MARKER DETAILS

606(34)

SPECIAL PROVISION
SECTION 606
GUARDRAIL
(Anchorage Assembly)

Description This work shall consist of furnishing and installing anchorage assemblies in accordance with current Standard Specifications and as shown in the attached details at the locations indicated on the plans.

Materials Materials shall meet the requirements specified in the following subsections of Division 700 - Materials:

Timber Preservative 708.05
Metal Beam Rail 710.04
Timber Posts 710.07
Guardrail Hardware 710.08

CONSTRUCTION REQUIREMENTS

Method of Measurement Anchorage assemblies will be measured by the unit (each) complete in place and will include all components shown on the attached details.

Basis of Payment The accepted quantity of anchorage assemblies will be paid for at the contract unit price per each, complete in place and will include all components shown on the attached details. Payment shall be full compensation for furnishing and installing all components as shown on the attached details and for incidentals necessary to complete the work.

Payment will be made under:

Pay Item		Pay Unit
606.259	Anchorage Assembly	Each

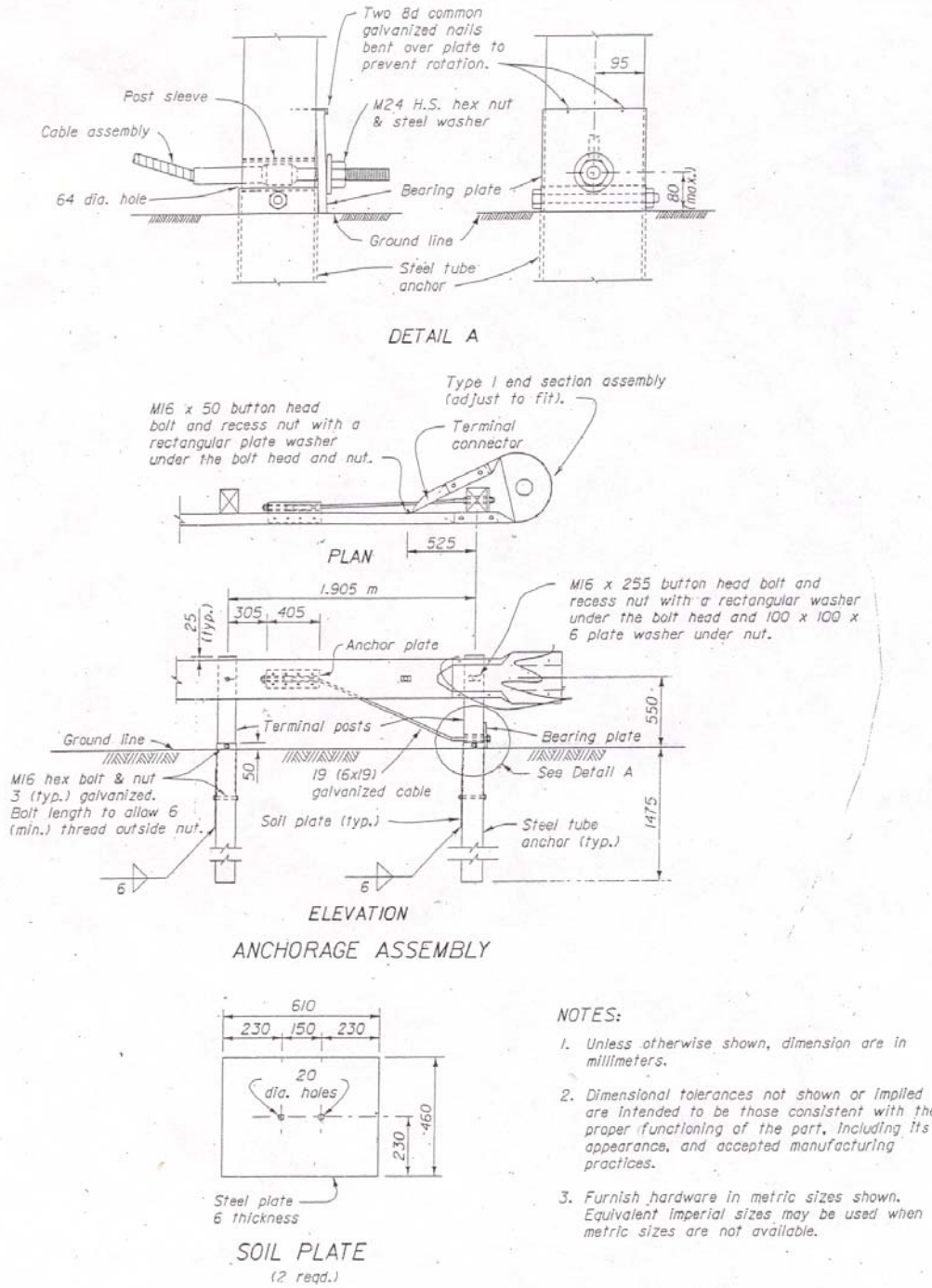

Anchorage Assembly

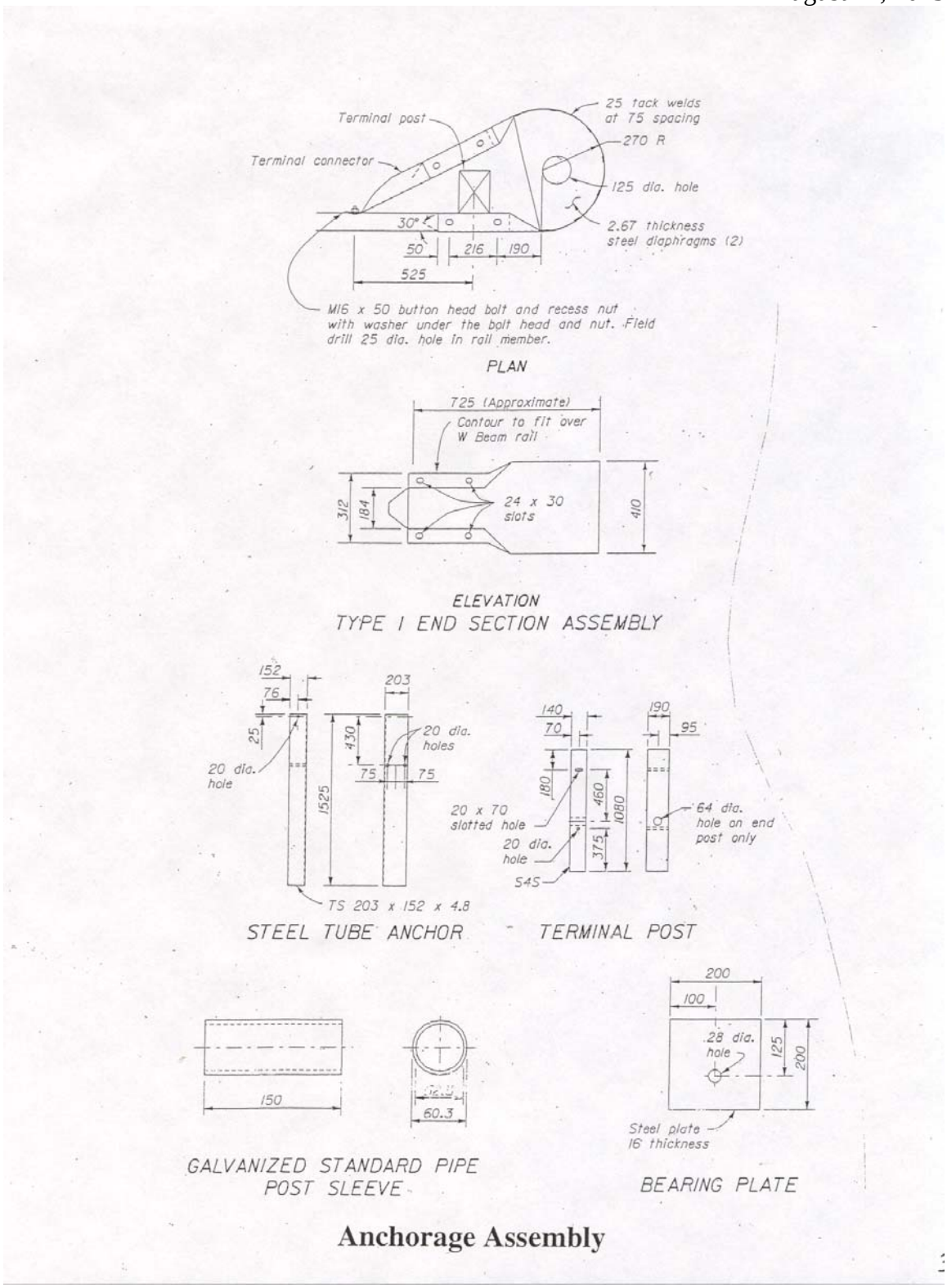

Anchorage Assembly

SPECIAL PROVISION
SECTION 606
Guardrail
(Timber Guardrail - Removed and Stacked)

Description: This work shall consist of removing, transporting to a secured site approved by the Resident and City of Westbrook's Public Works Department (PWD), and stacking existing timber guardrail.

CONSTRUCTION REQUIREMENTS

Removal: The timber guardrail designated to be removed and stacked shall be carefully lifted from its position and hauled to a secured site approved by the Resident.

Stacking: The stacking area shall be designated by the City of Westbrook's PWD and shall be within the City of Westbrook. The Contractor shall coordinate stacking area and date of delivery a minimum of ten (10) working days prior to delivery. The timber guardrail shall be carefully and neatly stacked at the stacking area as directed by the PWD. Timber guardrail which is considered unfit for reuse shall be disposed of by the Contractor at his own expense.

Basis of Payment: Timber Guardrail, Removed and Stacked, will be paid by the linear foot which will be full compensation for all labor, equipment, transporting, stacking and any incidentals needed to complete the item.

Payment will be made under:

Pay Item		Pay Unit
606.614	Timber Guardrail - Removed and Stacked	Linear Foot

SPECIAL PROVISION
SECTION 607
BIRD BARRIER

Description This work shall consist of furnishing and installing a stainless steel, physical barrier system to prevent pest birds and climbing animals from landing, roosting, nesting, or climbing on protected areas, to be installed at the locations shown on the plans or as established by the Resident.

MATERIALS

Bird Barrier Strips The Contractor shall provide new bird barrier strips as manufactured by a qualified supplier having at least 3 years of experience fabricating this type of product. Pre-approved Manufacturers:

1. Nixalite of America Inc.
   1025 16th Avenue, PO Box 727
   Dept. NI
   East Moline, IL 61244

2. Bird-X, Inc.
   300 N Oakley Blvd.
   Chicago, IL 60612

3. Bird Barrier America, Inc.
   20925 Chico Street
   Carson, CA 90746

4. Bird-G-Gone, Inc.
   23918 Skyline
   Mission Viejo, CA 92692

The base and spikes of the bird barrier strips shall be constructed of stainless steel and be installed in sufficient length, width, and/or number of strips to completely protect the identified areas from roosting or nesting birds. The manufacturer's specifications shall be followed regarding layout of barrier strips, specifically in regards to maximum allowable offset from vertical surfaces and edges and maximum spacing between strips.

Prior to starting this work, the Contractor shall submit for approval the name of the selected supplier, manufacturer's literature describing the product, method of attachment of barrier strips, installation procedures, and routine maintenance required.

CONSTRUCTION REQUIREMENTS

Installation of Barrier Strips

The surface(s) on which the barrier strips will be installed shall be cleaned/prepared in accordance with the manufacturer recommendations prior to installation. Concrete surfaces shall be free of loose or spalled concrete; all required concrete repairs shall be completed prior to installation of barrier strips. Manufacturer recommendations for spacing of strips and for maximum amount of uncovered area shall be followed to ensure proper protection from roosting and nesting. Provide adequate clearance from bridge bearings and other components to allow for access and maintenance, as required.

METHOD OF MEASUREMENT

Bird barrier strips properly placed and accepted shall be measured for payment by the linear foot. The payment unit (linear foot) shall refer to the linear footage of surface to be protected, not the linear footage of bird barrier strips installed (since a varying number of rows may be required depending on selected manufacturer).

Basis of Payment

Payment will be full compensation at the contract unit price for all labor, materials, and equipment required to install the bird barrier strips. This shall include surface cleaning and preparation prior to installation and all adhesive or fasteners required to install the strips.

Pay Item		Pay Unit
607.47	Bird Barrier	Linear Foot

Westbrook
Bridge Street Bridge
WIN: 019282.00
October 14, 2013

SPECIAL PROVISION
SECTION 608
SIDEWALKS
(Reinforced Concrete Sidewalk – 5" City Sidewalk)

ADD the following to Subsection 608.01:

608.01 Description Construct 5" reinforced concrete sidewalks, as shown on the plans.

REPLACE concrete material paragraph Subsection 608.02 with the following:

608.02 Materials Portland cement concrete for sidewalks shall be class A and meet the requirements of Section 502 - Structural Concrete.

REPLACE Subsection 608.03.f:

608.03.f. Finishing The surface finish shall be as shown in the plans.

ADD the following to Subsection 608.05:

608.05 Method of Measurement Portland cement concrete sidewalks will be measured by the square yard of finished surface, including areas below the brick pavers. No additional measurement will be made for overlapping areas or areas where the thickness is greater than 5".

ADD the following to Subsection 608.06:

608.06 Basis of Payment Payment for reinforcement will be considered included in the contract unit price for reinforced concrete sidewalk.

No additional payment will be made for areas where the thickness is greater than 5" including, but not limited to: sidewalk-tree well interfaces, or transitions underneath brick sidewalk areas. The additional concrete will be considered included in the contact unit price for reinforced concrete sidewalk.

Payment will be made under:

Pay Item		Pay Unit
608.08	Reinforced Concrete Sidewalk – 5" City Sidewalk	Square Yard

Westbrook
Bridge Street Bridge
WIN: 019282.00
October 14, 2013

SPECIAL PROVISION
SECTION 608
SIDEWALKS
(Reinforced Concrete Sidewalk – 6" City Plaza)

ADD the following to Subsection 608.01:

608.01 Description Construct 6" reinforced concrete plaza, as shown on the plans.

ADD to Subsection 608.02 with the following:

608.02 Materials Materials shall meet the requirements specified in the following Sections of Division 700- Materials:

Reinforcing Steel	709.01

REPLACE concrete material paragraph Subsection 608.02:

608.02 Materials Portland cement concrete for sidewalks shall be class A and meet the requirements of Section 502 - Structural Concrete.

REPLACE Subsection 608.03.f:

608.03.f. Finishing The surface finish shall be as shown in the plans.

ADD the following to Subsection 608.05:

608.05 Method of Measurement Portland cement concrete sidewalks will be measured by the square yard of finished surface, including areas below the brick pavers. No additional measurement will be made for overlapping areas or areas where the thickness is greater than 6".

ADD the following to Subsection 608.06:

608.06 Basis of Payment Payment for reinforcement will be considered included in the contract unit price for reinforced concrete sidewalk, including the reinforcement in the haunches.

No additional payment will be made for areas where the thickness is greater than 6" including, but not limited to: the concrete haunch areas, sidewalk-tree well interfaces, or transitions underneath brick sidewalk areas. The additional concrete will be considered included in the contact unit price for reinforced concrete sidewalk.

Pay Item		Pay Unit
608.08	Reinforced Concrete Sidewalk – 6" City Plaza	Square Yard

SPECIAL PROVISION
SECTION 608
DETECTABLE WARNINGS

Description This work shall consist of furnishing and installing curb ramp detectable warning plates with truncated domes at the locations shown on the plans or as established by the Resident.

MATERIALS

Detectable Warnings The Contractor shall provide new cast iron detectable warning plates as manufactured by one of the manufacturers listed on MaineDOT's Qualified Products list of Cast Iron Detectable Warning Plates. This list can be found at:

http://www.maine.gov/mdot/tr/qpl/hwysafetraffic.htm

Each field shall match the width of the ramp minus 2' and shall have a natural finish.

Prior to starting this work, the Contractor shall submit for approval the name of the selected supplier, manufacturer's literature describing the product, installation procedures, and routine maintenance required.

Concrete Portland cement concrete shall meet the requirements of Section 502, Structural Concrete, Class LP.

CONSTRUCTION REQUIREMENTS

Existing Concrete Curb Ramps

Existing Concrete shall be saw-cut to a dimension 100mm (4 inches) larger than the detectable warning plates. New concrete shall be placed in the resulting opening and finished, and the new plates set into the wet concrete, according to manufacturer recommendations. New plates shall be set square with the curb edge and the base of the truncated domes shall be flush with adjacent surfaces to allow proper drainage.

New Concrete Curb Ramps

New concrete shall be placed and finished for the ramp, and the new plates set into the wet concrete, according to manufacturer recommendations. New plates shall be set square with the curb edge and the base of the truncated domes shall be flush with adjacent surfaces to allow proper drainage.

Asphalt Ramps

Asphalt shall be saw cut and removed to provide an opening that will allow for the dimensions of the cast iron plate surrounded by an additional 4” border on all sides of the plate. New concrete shall be placed in the resulting opening and finished, and the new plates set into the wet concrete, according to manufacturer recommendations. New plates shall be set square with the curb edge and the base of the truncated domes shall be flush with adjacent surfaces to allow proper drainage.

METHOD OF MEASUREMENT

Detectable warning fields properly placed and accepted shall be measured for payment by the square foot. Measurement shall include actual plate area, not surrounding concrete.

Basis of Payment

Payment will be full compensation at the contract unit price for all labor, materials, and equipment required to install the detectable warning fields. This shall include surface preparation and removal of concrete or asphalt, and necessary replacement concrete. On new concrete ramps, concrete shall be paid for under separate items.

Pay Item		Pay Unit
608.26	Curb Ramp Detectable Warning Field	Square Foot

SPECIAL PROVISION
SECTION 609
CURB
(Special Curb – Wheel Stop)

Description; This work shall consist of furnishing and installation of precast concrete wheel stops in accordance with these special provisions. Installation shall consist of proper placement and anchoring of wheel stops. For each type of product required for the work of this Section, provide products of one manufacturer and source for consistency.

Materials:

Precast concrete wheel stops shall be reinforced precast concrete units, fabricated of minimum 4,000 psi concrete.

1. Exposed surfaces shall be smooth form finish. Dimensions shall be as shown on Drawings.
2. Precast units shall be reinforced with a minimum of two reinforcing bars, or as shown on the Drawings.
3. Concrete wheel stop length shall be 6 ft.
4. Unless otherwise indicated on the Drawings, concrete wheel stop shall be nominally 6 in. x 10 in. with front bevel and ½" chamfer at edges.
5. Each wheel stop shall have two holes, one near each end to accept reinforcing steel type anchor.
6. Precast concrete wheel stop shall be anchored in position using No. 5 galvanized steel reinforcing bars that conform to ASTM A 615, of lengths indicated on Drawings.

Construction: The Contractor shall use all means necessary to protect the materials of this Section before, during and after installation. Cracked, badly chipped, or stained units will be rejected where deemed unsuitable by Resident and shall not be employed in the work. In the event of damage, make all repairs and replacements necessary to approval of the Resident and at no additional cost. The Contractor shall clean pavement and remove all debris, and waste material from areas within the limit of work prior to installation. All work shall be executed in such a manner as to prevent any damage to existing pavements, curbs, paving to remain, drainage and utility structures, or underground pipes or utilities. Any damages or repairs required resulting from installation of wheel stops shall be at Contractor's expense.

1. Establish location and line of precast concrete wheel stops before installation. Location and line shall be true and even and inspected and approved by the Resident before installation.

2. Precast concrete wheel stop shall be anchored in place with two reinforcing bars driven through top of wheel stop and penetrating subsurface a minimum of 18 in.

3. Bars shall be driven so that top of anchor is ½ inch below flush with top surface of wheel stop. Holes shall be filled with non-shrink grout to top of surface.

Method of Measurement: Wheel stops shall be measured per each.

Basis of Payment: Wheel stops shall be paid for per each, each properly aligned, installed, anchored and finished in accordance with these special provisions.

Payment will be made under:

Pay Item		Pay Unit
609.312	Special Curb - Wheel Stop	LF

SPECIAL PROVISION
SECTION 609
CURBING
(Curbing - Removed and Stacked)

Description: This work shall consist of removing, transporting to a secured site approved by the Resident and City of Westbrook's Public Works Department (PWD), and stacking existing granite curbing.

All existing granite curbing shall be removed and reset, where possible. However, this work shall consist of removing, delivering, and stacking any existing excess granite curbing that cannot be reused due to its condition, geometric constraints, or otherwise determined by the Resident.

CONSTRUCTION REQUIREMENTS

Removal: The granite curbing designated to be removed and stacked shall be carefully lifted from its position and hauled to a secured site approved by the Resident and PWD.

Stacking: The stacking area shall be designated by the City of Westbrook's PWD and shall be within the City of Westbrook. The Contractor shall coordinate stacking area and date of delivery a minimum of ten (10) working days prior to delivery. The curbing shall be carefully and neatly stacked at the stacking area as directed by the PWD. Curbing which is considered unfit for reuse, as determined by PWD, shall be disposed of by the Contractor at his own expense.

Basis of Payment: Curbing, removed and stacked, will be paid by the linear foot which will be full compensation for all labor, equipment, transporting, stacking and any incidentals needed to complete the item.

Payment will be made under:

Pay Item		Pay Unit
609.441	Curbing - Removed and Stacked	Linear Foot

SPECIAL PROVISION
SECTION 617
Mulch
(Composted Bark Mulch)

Description This work shall consist of furnishing, placement and grading or composted bark mulch for trees, shrubs, perennials and groundcover installation.

Materials Composted bark mulch shall consist of 100% fine-shredded cedar or pine bark of uniform size and free from rot, leaves, twigs, debris, stones or other material harmful to plant growth. Bark shall have been shredded and stockpiled not less than two months and no more than two years before use. Mulch shall be free of weeds and mushrooms.

Construction Requirements Composted bark mulch shall be placed as detailed on the plans around trees, shrubs and perennials to maximum depth of 3-inches. Much shall be placed loosely to allow air circulation and moisture penetration. Mulch shall be kept 6-inches from base of trees and shrubs and shall not cover stems or leaves of perennial plantings.

Method of Measurement Measurement shall be by the cubic yard, complete and accepted in place.

Basis of Payment The accepted quantity for mulch will be paid for at the contract unit price per cubic yard.

Payment will be made under:

Pay Item		Pay Unit
617.3	Composted Bark Mix	Cubic Yard

SPECIAL PROVISION
SECTION 619
MULCH

Subsection 619.06, Method of Measurement is revised by the addition of the following:

Payment for hay and straw mulch by the unit will be along the slope of the ground. One Unit will be 1000 square feet.

Subsection 619.07, Basis of Payment is revised by the addition of the following:

Payment will be under:

Pay Item		Pay Unit
619.12	Mulch	Unit

Westbrook
Bridge Street Bridge
WIN: 019282.00
October 09, 2013

SPECIAL PROVISIONS
SECTION 621
LANDSCAPE
(Plant Species Specification and Quantities List)

The following list of items provides the estimated quantities for use on this project. The scientific name of the plant material is provided along with the common name in parenthesis.

The contractor shall follow MDOT Standard Specifications Rev. December, 2002 for landscape materials and installation procedures (sec 621).

The City Landscape Architect or his designee will be available to inspect plant materials and stake the location of plant materials at the time of planting.

In accordance with Section 104.5.9, a separate Performance Bond will not be required for the Landscape portion of this contract. A Maintenance Bond for a Two-Year Establishment period in the full value of the planting contract shall be included in this project.

PLANT MATERIALS

ITEM NO	Description	Unit	Quantity	Total
621.132	Small Deciduous Trees 1” – 1 1/2” cal. B&B Group A	Ea.		32
	Cercis canadensis (Eastern Redbud)		3	
	Cornus kousa (Korean Dogwood)		3	
	Malus ‘Spring snow’ (‘Spring snow’ Crabapple)		26	
621.273	Large Deciduous Trees 2” – 2 ½” cal. B&B	Ea.		26
	Acer rubrum (Red Maple)		9	
	Gingko biloba (Gingko)		15	
621.395	Dwarf Evergreen Shrubs 18” – 24” Group A	Ea.		14
	Juniperus horizontalis (Seagreen Juniper)		14	
621.513	Hybrid Rhododendron 2.5’ – 3’ Group A	Ea.		13
	Rhododendron Catawba album (Catawba Rhododendron)		13	
621.552	Deciduous Shrubs 3’ – 4’ Group A	Ea.		3
	Syringa vulgaris (Common Lilac)		3	

ITEM NO	Description	Unit	Quantity	Total
621.71	Herbaceous Perennials Group A	Ea.		198
	Hemerocallis ‘Ruby Stella’ (Ruby Daylily)		88	
	Hemerocallis ‘Happy Returns’ (Happy Returns Daylily)		56	
	Festuca Glauca Elijah Blue (Elija Blue Fescue)		30	
	Panicum amarum Dewey Blue (Switch Grass)		3	
	Phalaris arundi-nacea (Picta Ribbon Grass)		21	
621.713	Herbaceous Perennials & Groundcover	Ea.		43
	Vinca minor (Periwinkle)		43	
621.8	Two-Year Establishment Period	LS		LS
	Two-Year Maintenance Establishment Period		LS	

* * *

SPECIAL PROVISION
SECTION 623.09
(Remove and Relocate Statue)

Description

This work consists of removing, storing and reinstalling the existing granite base, Rudy Vallee bronze bust in accordance with the plans, this specification, the standard specifications or as directed by the Resident. The work includes furnishing and installing concrete foundation; drilling and anchoring granite base and the bronze bust to the new footing.

The existing granite base and bronze bust (hereinafter referred to as "the Statue") consists of the portion of the statue above grade and new supporting foundation below grade.

Materials

Anchoring material shall be selected from the MaineDOT Qualified Products List of Cementitious Anchoring Materials and concrete for foundation.

Construction Requirements

Prior to commencement of work, a removal and installation plan of the statue shall be submitted by the Contractor and approved by the City. Installation shall also be in conformance with the plans. The Contractor must have it plan approved before starting removal.

The statue shall be handled and stored with care. Nylon straps or other approved equal shall be used for lifting and moving the statue. The statue shall be stored on a flat surface in a safe location and shall be covered. The statue pieces shall be thoroughly cleaned before being set and the granite base to receive it shall be thoroughly cleaned. The statue shall be washed without affecting the finish and patina after installation.

Any damage to the statue as part of this work, including during removal, transportation, and installation, shall be repaired and paid for at the Contractor expense as approved by the Resident and the City.

Method of Measurement

Remove and Relocate Statute will be measured by each unit, complete, in place and accepted.

Basis of Payment

Remove and Relocate Statue will be paid for at the Contract price for each, complete in place. Payment shall be full compensation for furnishing all labor, equipment, materials, and incidentals necessary to complete the work including existing foundation removal to below sidewalk grade.

Payment will be made under:

Pay Item	Pay Unit
623.09 Remove and Relocate Statue	Each

SPECIAL PROVISION
SECTION 626
FOUNDATIONS, CONDUIT, AND JUNCTION BOXES FOR HIGHWAY SIGNING, LIGHTING, AND SIGNALS
(Light Standard Foundation)

The provisions of Section 626 of the Standard Specifications shall apply with the following additions and modifications.

626.01 Description
This work shall consist of furnishing and installing concrete foundations for new and relocated existing lighting standards in accordance with these specifications and plans.

626.03 General
Coordinate excavation for lighting pole bases with existing underground utilities. Where conflicts are found with existing utilities, make all practical efforts to install new work to produce a minimum impact on existing conditions. Where relocation of existing utilities is deemed necessary, obtain approval from affected utility supplier in advance of commencing relocation work.

626.05 Basis of Payment

Payment will be made under:

Pay Item		Pay Unit
626.341	Light Standard Foundation	Each

Westbrook
Bridge Street Bridge
WIN: 019282.00
September 4, 2014

SPECIAL PROVISION
SECTION 627
PAVEMENT MARKINGS

The last paragraph of Subsection 627.10, Basis of Payment is revised by the addition of the following:

Pay Item		Pay Unit
627.733	4" White or Yellow Painted Pavement Marking Line	LF

SUPPLEMENTAL SPECIFICATION
SECTION 634
HIGHWAY LIGHTING

ADD the following to Subsection 634.02:

634.02 General

Highway lighting luminaires and lighting standards shall be provided as detailed on the Contract Drawings. As part of the Base Bid, provide Highway Lighting Luminaires and Lighting Standards as manufactured by *Hadco/Visco* (CF Series).

Type B
Highway Lighting Luminaire: One (1) area light per lighting Standard with Type 3 IES distribution, ballast with modular connectors, photocell control, gasketed clear dome diffuser and 250-watt metal halide lamp. Luminaire finish shall be dry powder coat (polyester) paint (RAL6005) in accordance with Section 506. The luminaire shall conform to the details shown on the plans.

Lighting Standard: 11 gage tapered steel pole, 8-sided (*Visco* #VI-WB21-OCT-21), with 2-1/2 inch schedule 40 steel pipe bracket arms (*Hadco* #SA9075), 2-piece cast aluminum pole castings, 24” long banner arms, and a 2-piece cast aluminum base cover. Pole finish shall be polyester powder coat paint over a galvanized sub-finish (RAL6005) in accordance with Section 506, 24-ft. high with single bracket arm. The lighting standard and bracket arm shall conform to the details shown on the lighting plans.

Type C
Highway Lighting Luminaire: Similar to Type B and physical size shall match existing type C’s, except wattage is 150-watt metal halide lamp . Luminaire finish shall be polyester powder coat paint (RAL6005) in accordance with Section 506. The luminaire shall conform to the details shown on the lighting plans.

Lighting Standard: 11 gage tapered steel pole, 8-sided (*Visco* #VI-WB16-OCT-9), with 2-1/2 inch schedule 40 steel pipe bracket arms (*Hadco* #SA9075), 2-piece cast aluminum pole castings, a duplex GFCI receptacle, twin bracketed planter and no banner arms, and a 2-piece cast iron base cover. Pole finish shall be dry powder coat (polyester) paint over a galvanized sub-finish (RAL6005) in accordance with Section 506, 14-ft. high with single bracket arm. The lighting standard and bracket arm shall conform to the details shown on the lighting plans.

ADD Subsection 634.0511:

634.0511 Removing and Stacking Light Standards Light standards to be removed and stacked shall be carefully removed from their position and hauled to a secured site approved by the Resident and the City of Westbrook’s Public Works Department.

The stacking area shall be designated by the Public Works Department and shall be within the City of Westbrook. The Contractor shall coordinate stacking area and date of delivery a minimum of ten (10) working days prior to delivery. The light standards shall be carefully and neatly stacked at the stacking area as directed by the Public Works Department. Light standards which are considered unfit for reuse, as determined by Public Works Department, shall be disposed of by the Contractor at his own expense.

AMEND the following paragraph of Subsection 634.093:

634.093 Basis of Payment

Lump sum payment for highway lighting system shall be full compensation for furnishing, installing and erecting: ballast, lamps, wiring in underground conduit, pole wiring, and all other wiring, transformer enclosures, luminaires (except luminaires for high mast lighting and light standards), all identification tags, and all materials, labor, equipment, tools, miscellaneous hardware and incidentals necessary to complete the work. Payment shall also include removing and resetting light standards, removing and stacking existing light standards, installing breakaway devices on existing poles, disposing of unused light standards, as noted on the plans, and for furnishing portable electric power units. Payment shall also include all conduit, handholes, and junction boxes as shown on the Plans, except those mounted on the bridge structures.

The following items will be included in the Highway Lighting lump sum item:

1. Precast Concrete Junction Box
2. Flared wall Junction Box (as detailed on the Plans)
3. Metallic Conduit
4. Non-metallic Conduit

No separate payment will be made for these items and material and construction requirements shall be in accordance with Section 626, or as shown on the Plans.

Pay Item		Pay Unit
634.16	Highway Lighting	Lump Sum
634.2102	Type B Light Standard	Each
634.2103	Type C Light Standard	Each

SPECIAL PROVISION
Section 634 and 643
Highway Lighting and Traffic Signals

Section 634.09 testing of highway lighting, the first sentence shall be amended as follows:

Before acceptance of the work, the contractor shall cause the following tests to be made on all lighting circuits, by a licensed electrician.

The tests do not need to be performed in the presence of the Resident, but the test results shall be recorded on the Highway Lighting Quality Control Check List and submitted to the Resident by the Contractor for acceptance. The form shall be signed by the licensed electrician certifying that the highway lighting meets the requirements of section 634.09.

Subsection 634.14, field testing of Traffic Signals, the first sentence shall be amended as follows:

Before acceptance of the work the contractor shall cause the following tests to be made on all traffic signal equipment and circuits, by a licensed electrician.

The tests do not need to be performed in the presence of the Resident, but the test results shall be recorded on the Traffic Signal Quality Control Check List and submitted to the Resident by the Contractor for acceptance. The form shall be signed by the licensed electrician certifying that the signal equipment and circuits meet the requirements of section 634.14.

Highway Lighting Quality Control Checklist

Subsection 634.09 Field Testing

Project Pin # _____

Location (if multiple services, please be specific)- _____

Grounding Electrode Resistance at service _____

Number of Circuits _____

Hand-Off-Auto Switch? _____

Circuit #1

Open Circuit Resistance- (Ohm out both hot legs at the cabinet while they are shorted together at the last pole and the fuse holders are disconnected at each pole) _____

Megger Test- (Meg out both hot legs to ground at the cabinet while they are shorted together at the last pole and the fuse holders are disconnected at each pole) _____

Current draw- (during normal operation) Leg #1 _____ Leg #2 _____

Operating Voltage at last pole _____

Circuit #2

Open Circuit Resistance- (Ohm out both hot legs at the cabinet while they are shorted together at the last pole and the fuse holders are disconnected at each pole) _____

Megger Test- (Meg out both hot legs to ground at the cabinet while they are shorted together at the last pole and the fuse holders are disconnected at each pole) _____

Current draw- (during normal operation) Leg #1 _____ Leg #2 _____

Operating Voltage at last pole _____

I, _____, certify that this work was done in accordance with subsection 643.14 and current NEC _____ guidelines, and when tested, was functioning as intended.
(YEAR)

Electrician's Signature _____

Electrician's License # _____

Highway Lighting Quality Control Checklist

Subsection 634.09 Field Testing

Project Pin # _____

Location (if multiple services, please be specific)- _____

Grounding Electrode Resistance at service _____

Number of Circuits _____

Hand-Off-Auto Switch? _____

Circuit #3

Open Circuit Resistance- (Ohm out both hot legs at the cabinet while they are shorted together at the last pole and the fuse holders are disconnected at each pole) _____

Megger Test- (Meg out both hot legs to ground at the cabinet while they are shorted together at the last pole and the fuse holders are disconnected at each pole) _____

Current draw- (during normal operation) Leg #1 _____ Leg #2 _____

Operating Voltage at last pole _____

Circuit #4

Open Circuit Resistance- (Ohm out both hot legs at the cabinet while they are shorted together at the last pole and the fuse holders are disconnected at each pole) _____

Megger Test- (Meg out both hot legs to ground at the cabinet while they are shorted together at the last pole and the fuse holders are disconnected at each pole) _____

Current draw- (during normal operation) Leg #1 _____ Leg #2 _____

Operating Voltage at last pole _____

I, _____, certify that this work was done in accordance with subsection 643.14 and current NEC _____ guidelines, and when tested, was functioning as intended.
(YEAR)

Electrician's Signature _____

Electrician's License # _____

Traffic Signal Quality Control Checklist

Subsection 643.14 Field Testing

Project Pin # _____

Grounding Electrode Resistance at service _____

ID tags on loop amps / detector cards? _____

Location

Street Approach _____

Loop #	_____	**Resistance**	_____
Phase #	_____	**Meg to ground**	_____
L,C, or R Lane	_____	**Amount of bondo covering loop**	_____
Pulse or Presence	_____		

Street Approach _____

Loop #	_____	**Resistance**	_____
Phase #	_____	**Meg to ground**	_____
L,C, or R Lane	_____	**Amount of bondo covering loop**	_____
Pulse or Presence	_____		

Street Approach _____

Loop #	_____	**Resistance**	_____
Phase #	_____	**Meg to ground**	_____
L,C, or R Lane	_____	**Amount of bondo covering loop**	_____
Pulse or Presence	_____		

I, _____, certify that this work was done in accordance with subsection 643.14 and current NEC _____ guidelines, and when tested, was functioning as intended.
(YEAR)

Electrician's Signature _____

Electricain's License # _____

May 31, 2005
Supercedes January 29, 2004

SPECIAL PROVISION
SECTION 634
HIGHWAY LIGHTING

Under 634.024 Light Standards, add the following to the 3rd paragraph just prior to the last 2 sentences:

"High mast poles" exceeding 15 meters [50 ft] but less than 30 meters [100 ft] in height shall be classified as Fatigue Category II with Fatigue Importance Factors (I_f) of 0.65 for Vortex Shedding and 0.72 for Natural Wind Gusts. "High mast poles" of 30 meters [100 ft] or more in height, shall be classified as Fatigue Category I with Fatigue Importance Factors (I_f) of 1.0 for Vortex Shedding and 1.0 for Natural Wind Gusts."

634.08 Service, add the following after the last paragraph:

"All meter mounting devices shall be installed so that the meters will be upright (plumb). They shall be installed with the top of the meter not less than 1.2 M [48 in] nor more than 1.5 M [60 in] from the floor to the final grade. Exceptions to this height requirement will be made where special permission has been given to install group or modular metering, overall metering enclosures, or pole-mounted meters. Level grade shall be maintained for a minimum of 1.0 M [3 ft] in front of the meter enclosure to provide a safe working space. In order to meet this requirement on uneven terrain, as an option, the Contractor may install a pressure-treated wood platform.

For any non-residential (industrial or commercial) self-contained meter socket the by-pass requirements are single phase, 100 or 150 amp, single handle lever operated.

The Contractor shall meet all requirements and regulations of Utility Companies when installing equipment on their poles and for the service connection. It is the responsibility of the Contractor to contact the appropriate Utility to determine their specific requirements."

SPECIAL PROVISION
SECTION 641
BENCH
(Metal bench 6 ft.)

Description:

This work shall consist of furnishing and installing all materials and equipment necessary for the assembly, delivery and installation of the metal benches, in accordance with these specifications, as shown on the plans, and as directed by the Resident.

Benches shall match City of Westbrook existing River Walk contoured all-steel benches as manufactured by Victor Stanley, Inc. or approved equal.

Materials:

All fabricated metal components are steel shotblasted, etched, phosphatized, and electrostatically powder-coated with T.G.I.C. polyester powder coatings. Products are fully cleaned and pretreated, preheated and coated while hot to fill crevices and build film coating. Coated parts shall be fully cured to coating manufacture's specifications. The resulting finish thickness shall average 8-10MILS (200-250 microns). All components shall be hot dip galvanized before powder-coating. The installation, handling and storage of all material shall comply with manufacturer's instructions and recommendations. Color shall be City standard for River Walk – RAL 6005.

Construction Requirements:

The benches shall be located per the plans. The benches shall be permanently affixed to the grounds using anchor bolts; carriage bolts or lag bolts as conditions may warrant.

Submittals:

Contractor shall submit drawings of benches including all product data, manufacturers' specifications, and installation instructions for all items furnished for review by City Landscape Architect prior to purchase and installation.

Method of Measurement:

The Benches will be measured for payment by Each, complete and in place and permanently affixed to the ground.

Basis of Payment:

The accepted Bench will be paid for at the contract unit price Each. Payment will be full compensation for the furnishing of all materials, labor and incidentals required for installation of the Bench, complete and in place.

Payment will be made under:

Pay Item		Pay Unit
641.12	Bench	Each

SPECIAL PROVISION
SECTION 641.34
TRASH RECEPTACLE

Description:

This work shall consist of furnishing and installing all materials and equipment necessary for the assembly, delivery and installation of the metal trash receptacles, in accordance with these specifications, as shown on the plans, and as directed by the Resident.

Trash Receptacles shall be match the City of Westbrook existing River Walk S-424, 36-gallon Ironsites Series Litter Receptacle as manufactured by Victor Stanley, Inc. or approved equal.

Materials:

All fabricated metal components are steel shotblasted, etched, phosphatized, and electrostatically powder-coated with T.G.I.C. polyester powder coatings. Products are fully cleaned and pretreated, preheated and coated while hot to fill crevices and build film coating. Coated parts shall be fully cured to coating manufacture's specifications. The resulting finish thickness shall average 8-10MILS (200-250 microns). All components shall be hot dip galvanized before powder-coating. The installation, handling and storage of all material shall comply with manufacturer's instructions and recommendations.

Lids: Lids shall be standard tapered dome with rain bonnet lid.

Security: Lid shall be secured with vinyl coated, galvanized steel aircraft cable. Cable shall be looped around welded in place attachment brackets and crimped in place.

Color: Color shall match City of Westbrook River Walk standard, RAL 6005.

Construction Requirements:

The trash receptacles shall be located per the plans. The trash receptacles shall be permanently affixed to the grounds per manufacturer's recommendations

Submittals:

Contractor shall submit drawings of Trash Receptacles including all product data, manufacturers' specifications, and installation instructions for all items furnished for review by City Landscape Architect prior to purchase and installation.

Method of Measurement:

The Trash Receptacles will be measured for payment by Each, complete and in place and permanently affixed to the ground.

Basis of Payment:

The accepted Trash Receptacles will be paid for at the contract unit price Each. Payment will be full compensation for the furnishing of all materials, labor and incidentals required for installation of the Trash Receptacles, complete and in place.

Payment will be made under:

Pay Item		Pay Unit
641.34	Trash Receptacle	Each

Special Provision
SECTION 643
Traffic Signals

643.021 Materials

Add	Concrete	Section 502.03
Add	Reinforcing Steel	Section 503.02

Add Section 643.041 Foundations as follows:

Foundations shall consist of cast-in-place reinforced concrete drilled shafts; one drilled shaft per mast arm or dual purpose pole. Supplier shall determine the Bending Moment, Shear Force, Torsion and Axial Load at the top of each mast arm or dual purpose pole foundation. Foundation size (diameter and length) shall depend on the Torsion and Bending Moment at the top of the foundation based on Chart 1 and 2, below. The larger of the foundation sizes shown for Torsion or Bending Moment shall be the required foundation size. Lengths are depths below lowest adjacent (proposed) grade.

Chart 1 - Foundation Length (feet) Based on Maximum Torsion

Torsion (foot-kips)	36" diameter	42" diameter	48" diameter	54" diameter	60" diameter
20	13'	11'	10'		
25	14'	12'	10'		
30	16'	13'	11'		
35	18'	15'	12'		
40	20'	16'	13'		
45		17'	14'	13'	
50		18'	15'	13'	
55		20'	16'	14'	13'
60			17'	15'	13'

Chart 2 - Foundation Length (feet) Based on Maximum Bending Moment

Bending Moment (foot-kips)	36" diameter	42" diameter	48" diameter
25	11'	11'	10'
30	12'	11'	11'
35	13'	12'	11'
40	13'	12'	12'
45	14'	13'	13'
50	14'	13'	13'
55	14'	14'	13'
60	14'	14'	13'

Drilled shafts shall not be permanently cased, except for the top 3-feet; concrete shall be cast directly against the surrounding soil. Precast foundations will not be accepted.

Reinforcing Steel shall be as shown in Standard Detail 626(03) and 626(04) for 36-inch foundations. Reinforcing Steel for larger diameter foundations will be according to the following chart:

Summary of Reinforcing Steel –foundation diameter	**42”**	**48”**	**54”**	**60”**
Quantity longitudinal bars	18	25	29	33
Longitudinal bar size	#8	#8	#8	#8
Spiral bar size	#5	#5	#5	#5
Spiral bar spacing (0-2 ft) (inches)	4	4	4	4
Spiral bar spacing (2 ft – L/2) (inches)	8	8	8	8
Spiral bar spacing (L/2 - tip) (inches)	12	12	12	12

Concrete for foundations shall be placed immediately after excavation to prevent water from accumulating in the excavated areas. Concrete shall be Class LP in accordance with Section 502, Structural Concrete. Drilled shaft foundation holes, except in bedrock, shall be excavated by auger method to the neat line of the outside dimensions of the footing without disturbing the soil around or below the proposed footing. Drilled shafts shall not be permanently cased, except for the top 3 feet; concrete shall be cast directly against the surrounding soil. Precast foundations will not be permitted.

All provisions of Section 626.034 Concrete Foundations shall apply to these drilled shaft foundations.

In areas where bedrock is encountered above the proposed bottom of the drilled shaft, the Contractor will have the option of removing rock and placing the shaft at the design depth shown above, or constructing a rock-anchored foundation system to the depth of the foundation shown. Rock-anchored foundations shall be constructed according to Standard Detail 626(06) Foundations for Traffic Signals, Highway Signing and Lighting, or as approved by the Department for drilled shafts greater than 36 inches in diameter.

Any damage to slopes or pavement resulting from installation of mast arm or dual purpose poles and foundations shall be repaired by the Contractor as directed by the Resident. Costs of repairs shall be incidental to payment under Section 643.

Section 643.19 Basis of Payment Add the following sentence: Foundations for Mast Arm Poles and Dual Purpose Poles shall be incidental to the Pole Item and shall be full compensation for all labor, equipment and materials for the accepted complete signal foundation installation, including but not limited to foundations, excavation, excavation stabilization, backfill, replacement of subbase gravel, replacement or repair of pavement, slope regrading, and placement of loam, seed and mulch on disturbed slopes.

SPECIAL PROVISIONS
SECTION 643
TRAFFIC SIGNALS

Where called for on the contract plans, traffic signal equipment shall be in conformance with the State of Maine Standard Specifications Section 643 and the following:

643.02 General
Add the following:

PACTS
Signalized Intersection Specifications

Intent of this Specification:
It is the intent of this specification to provide a minimum equipment standard for any new or modernized traffic signal project, which is fully compatible and operable with the PACTS Street Wise remote computer signal control and monitoring equipment. PACTS has established a goal of being able to remotely access all existing and future traffic signal installations within the PACTS boundaries. PACTS staff has received considerable training in the operation of the StreetWise system. Neither PACTS, nor the member communities, have the staff or financial resources to operate or maintain more than one such traffic control system. Therefore, if a traffic control system or peripheral equipment, other than that listed below, is proposed for installation within the PACTS area, the supplier shall replace all signal equipment, software, and peripherals that are connected to the Streetwise system, and shall include training of PACTS staff in the operation and maintenance of the system to the level they currently enjoy. The expense associated with a complete system replacement and training shall be at no cost to PACTS.

Scope of Work
The Traffic Signal System portion of this project will result in a mast arm pole signal installation at Main Street intersection with new Bridge Street. The contractor shall maintain existing traffic signal operation at Main Street intersection with existing Bridge Street during the construction to control traffic flow until the new signal is operational. The proposed controller shall be equipped for interconnection using an Encom wireless connection to the controller serving the Mechanic Street and William Clark Drive intersection. This radio connection must be field verified and shall include all repeaters required. The project intersection shall have optical emergency vehicle preemption on each approach using “Tomar” equipment. All vehicle detection shall be wire pavement loops.

The existing traffic signals shall be removed after the new traffic signal system is operating.

Add

Controller Equipment:

- Controllers shall be fully compatible with the existing PACTS Naztec StreetWise ATMS Software installed at the PACTS office and at the Westbrook Public Safety Building. Controllers shall be compatible with both Trafficware/Naztec and NTCIP protocols.
- All major components of the controller cabinet assembly shall be from the same manufacturer; this includes cabinet assembly, controller, MMU, BIUs and cabinet power supply.
- Traffic control cabinets shall be Trafficware/Naztec Model M34 or P44 TS2 Type 1 Series only. Base mount cabinets shall have a 15" extension base.
- Secondary traffic controllers shall be Trafficware/Naztec Model 980-E TS2 Type 1 Series with Ethernet Port only.
- Master controllers shall be Trafficware/Naztec Model 981-E Series with Ethernet Port only.
- Malfunction management units shall be Trafficware/Naztec Model MMU-516L with LCD, Keypad and Communications Port only.
- Bus interface units shall be Trafficware/Naztec Model BIU-130 only.
- Cabinet power supply shall be Trafficware/Naztec Model TS2-CAB-PS only.

Detection Equipment:

- All vehicle detection equipment shall be provided by wire pavement loops.
- The loop amplifiers shall be 4 channel rack mounted cards wired as per the tables provided on the plans for each intersection.
- The wire pavement loops shall be stop bar loops with normal average dimensions of 6 foot X 40 foot.
- Each rack mounted amplifier card must provide accurate vehicle counts on at least two of the four output channels with the other two channels normally used for presence vehicle detection.
- Provide shop drawings and describe the operation of the rack mounted amplifiers including the intended connections and channel identifications if there will be any changes necessary from the tables on the plans for each intersection.
- All work necessary to install operational loops (including sawcut of existing pavement) is incidental to the 643.86 Traffic Signal Loop Detector Item.

Communications Equipment:

- Encom wireless broadband system capable of communicating to the Public Safety Building through the William Clark Drive fiber optic interconnection and via the new connection from the Main Street and new Bridge Street intersection with wire loop detection to the Mechanic Street and William Clark Drive controller cabinet.

Optical Preemption Equipment:

- Optical preemption equipment shall be fully compatible with Tomar secure emitters.
- Optical preemption equipment shall be fully compatible with Tomar OSPsoft IP software installed at the PACTS office.
- Optical signal processor card shall be Tomar Model 2140 Series only.
- OSP device server shall be Control DeviceMaster RTS 1P only.
- Card cage shall be Tomar Model 1881 only.
- Optical detector shall be Tomar Model 2091-SD only.
- Confirmation strobe shall be Tomar Model 804-110-R only.

Vehicle Signal Equipment:

- Vehicle signal housings shall be McCain Model MTSTA or MTSTP Series only (Yellow body, Black door, Yellow outside/ Black inside visor.)
- Vehicle signal housings shall include backplates (black finish.)
- LED modules for vehicle indications shall be GE Lumination Model DR6 Series only

Pedestrian Signal Equipment:

- Pedestrian signal housings shall be McCain Model 1000 Series only (Yellow body, Black door, Yellow outside/ Black inside visor.)
- LED countdown modules for pedestrian indications shall be GE Lumination Model PS7-CFF1-26A Series only.
- Accessible Pedestrian Signal (APS) pushbuttons shall be Campbell Company Advisor Model A-57 or approved equal.
- APS Pushbuttons shall have a locator tone and a customized walk message.

Traffic Structures:

- Mast arms shall be Valmont SM16 or CB16 Series or approved equal.
- Strain poles shall be Valmont SW56 Series or approved equal.

External Component Coating:

All poles, mast arms, mounting hardware, pedestrian and vehicular signal housings, P-44 cabinets and extension bases, push button assemblies and other external items shall match the highway lighting pole color and coating specifications. Coating shall be in accordance with Section 506. The contractor shall provide a detailed material, application method, and color submission for traffic signal components prior to coating application on any hardware item. The intent is that all external items installed on this project are as closely matched in color as is reasonably possible. The coating methods and materials are intended to be of highest possible quality to result in a maximum possible common design life with minimum maintenance.

Blank out Sign:
In accordance with the plans the contractor shall furnish and install operational blank out signs that are 30 inches X 30 inches and capable of conveying the message YIELD TO PEDESTRIANS. The contractor may submit variations on the blank out sign legend as long as the message is conveyed in accordance with the MUTCD when the associated pedestrian phase is active.

Traffic Signal Removal:
All existing traffic signal equipment shall be removed including all above ground equipment and pull boxes. Existing conduit shall be abandoned. Existing traffic signal foundations including that for the pedestal poles and mast arm poles shall be removed. Pedestal pole foundations shall be entirely removed and mast arm pole foundations shall be removed to 3 feet below the final grade / top of sidewalk. Foundation removal will be paid under Item 626.36.

SPECIAL PROVISION
SECTION 652
MAINTENANCE OF TRAFFIC
(Traffic Control)

Section 652 of the Standard Specifications is amended as follows:

652.1 Description The following paragraphs are added:

The Contractor shall provide a Traffic Control Plan (TCP) to the Resident, in accordance with Subsection 105.7 of the Standard Specifications. The Contractor shall not commence work in the field until the Department approves the TCP. The TCP shall be signed and sealed by a Professional Engineer licensed in the State of Maine. The Contractor shall provide a Traffic Control Supervisor who will be responsible for providing traffic control management in compliance with the contract and the latest edition of the Manual on Uniform Traffic Control Devices (MUTCD), including supervision of personnel for the installation, inspection and maintenance of all traffic control devices. The Traffic Control Supervisor, or a qualified substitute, shall monitor traffic control details 24 hours per day and 7 days a week.

No disruptions to traffic will be allowed before the TCP is reviewed and approved by the Department. The Contractor shall present the TCP at a pre-construction traffic control meeting at or before the Preconstruction Meeting. The Contractor should allow ten Business Days in his/her schedule for MaineDOT to review and approve the first submission of the TCP after the pre-construction traffic control meeting. If the initial TCP is rejected, the Contractor should allow five Business Days in his/her schedule for the Department to review and approve the second submission of the TCP after it is resubmitted.

In addition to other TCP Requirements enumerated herein, the TCP shall show all Construction Signs, Emergency/alternate Route Signs, Speed Signs, Channelization Devices, Work Zone Crash Cushions, Temporary Traffic Signal, and Portable – Change Message Signs.

652.2.2 Materials The following paragraph is added:

All proposed temporary signing shall be shown in the Traffic Control Plan (TCP). Signs, except when tripod mounted, shall be placed on breakaway posts.

652.3.3 Submittal of Traffic Control Plan The following subsections are revised as noted:

e. If the Contractor is using a flagging Subcontractor, then the name and address of the flagging Subcontractor will be provided in addition to a list of all of the Contractors certified flaggers to be used on the Project.

f. An around the clock procedure for notifying the Resident, local emergency officials, and local government officials (including the name and phone numbers of such officials) whenever significant traffic impact are anticipated or occur.

The following paragraphs are added:

The Traffic Control Plan shall also address how public access will be maintained to the commercial abutters, including the City parking area at the Edwards Block and the loading docks at the Dana Warp Mill building, and how bicycle and pedestrian access will be maintained to the Riverwalk areas designated to remain open during construction. Provisions for emergency vehicle access shall be included and shall be coordinated with the City of Westbrook Fire and Police Departments.

The City parking lot adjacent to the Edwards Block shall remain open at all times, other than the parking spaces directly impacted by the new Bridge Street roadway alignment and when the parking lot is being reconstructed after traffic is shifted to the new Bridge Street. Provisions for temporary parking shall be coordinated with the City as required by the City project contained in this contract.

The Traffic Control Plan shall be reviewed and approved by the MaineDOT Region 1 Traffic Engineer and Dana Hanks at MaineDOT Augusta HQ.

652.3.4 General Requirements The following paragraphs are added:

All construction work shall be confined to the lanes closed to traffic. The Contractor's workers and equipment shall not cross traffic lanes.

All permanent striping in areas of new pavement will be paid for under the appropriate contract bid items.

The exact limits of temporary lines to be striped and removed shall be determined in the field by the Resident.

Upon completion of project the Contractor shall remove all temporary pavement striping and markings and restore the original pavement markings to the original configuration in areas with no new pavement.

Flaggers will be required whenever construction vehicles are entering or leaving the through traffic stream. The flaggers shall be authorized only to control the Contractor's vehicles when entering traffic or to prevent traffic from following the contractor's vehicles leaving the traffic stream.

Channelization. Channelization devices shall be NCHRP 350 compliant. Channelization devices include the following:

- Flashing Arrow Boards
- Type I Barricades
- Type II Barricades
- Type III Barricades
- Vertical Panel Markers
- Drums
- Cones
- Temporary Raised Pavement Markers
- Temporary Pavement Markings
- Temporary Concrete Barrier
- Tubular Markers

Channelization devices shall be installed and maintained at the spacing in accordance with the MUTCD to delineate travel lanes through the project, unless otherwise specified on the plans or herein. Temporary concrete barriers shall conform to the requirements of Section 526. Temporary Overlay Markers (TOMs) will not be permitted in lieu of temporary paint.

Speed Limits in Work Zones. The Contractor shall sign all approved reduced speed limits on construction project according to Maine DOT APM #431 -A Policy on the Establishment of Speed Limits in Work Zones. The approved reduced speed limit shall be 25 MPH unless otherwise directed by the Resident.

Portable-Changeable Message Signs (PCMS) A total of 3 (three) PCMS shall be used at the following locations during construction:

Bridge Street Southbound:

1. Just to the southwest of the Bridge Street and Cumberland Street intersection.

Main Street Westbound:

1. Just to the east of the Main Street and New Gorham Road intersection.

Main Street Eastbound:

1. Just to the west of the Main Street and Westbrook Arterial intersection.

All PCMS shall be in place and operating a minimum of 2 weeks before the project beginning. The PCMS shall be paid for under item 652.41.

Traffic Control Officers shall be in place at the following intersections:

1. Bridge Street at Main Street

Only traffic control officers shall be used at signalized intersections if required. Flaggers are not to be used at signalized intersections. The traffic control devices needed to close routes or redirect traffic shall be stored as near as possible to where they will be used. The Contractor shall inform the City at least one calendar week prior to needing the traffic control officers.

The PCMS shall be remote-controlled from the job site via hard wire telephone, cell phone and/or radio.

652.3.6 Traffic Control

The Traffic Control Plan shall allow for one lane of traffic to be maintained in each direction on Bridge and Main Streets, other than during the permissible single lane closures contained in Special Provision 107 (Open to Traffic). This shall consist of two 11 (eleven) foot lanes and a 5 (five) foot pedestrian sidewalk as shown in the Conceptual Phasing Plans contained in the contract plans. Existing turning lanes on Main Street shall also be maintained. One 11(eleven) foot lane of one-way traffic shall be maintained on the Bridge Street Spur, other than during the permissible Spur closure contained in Special Provision 107 (Open to Traffic).

Portable-Changeable Message Signs shall be used to notify the traveling public of the Bridge Street single lane operation and Bridge Street Spur closures as outlined above.

The Traffic Control Plan shall also address proposed night time work between the hours of 7:00 P.M. and 6:00 A.M., including lighting needs. See *Section 652.6 Night Work* for more information.

652.6 Night Work

Night work between the hours of 7:00 P.M. and 6:00 A.M. shall be subject to the approval of the Resident. Night work that is approved by the City Council shall be limited to the following operations unless additional approval is requested and granted.

- Bridge beam and truss erection
- Underground utility and closed drainage work
- Traffic signal installation, removal, and switch over
- Pavement striping
- City parking lot asphalt milling and paving

652.8 Basis of Payment This entire Subsection is revised to read:

Maintenance of traffic control devices will be paid for at the contract lump sum price. Payment will be full compensation for the Traffic Control Plan, Traffic Control Supervisor, channelization devices including night lighting, removing and resetting channelization devices, removal of pavement markings, temporary pavement marking lines, removal of temporary pavement markings, restoring the original pavement markings in areas with no new pavement and maintenance thereof, all work associated with the proposed signalized intersection opening and existing signalized intersection closing, maintaining bicycle and pedestrian traffic including Riverwalk access, and maintaining abutter access. Maintenance of signs includes: replacing devices damaged, lost, or stolen; and cleaning and moving as many times as necessary throughout the life of the contract, regardless whether the work areas or projects are geographically separated or not separated.

Any work required to modify and restore the sidewalk, curbing, and landscaping adjacent to the Disability RMS building at STA 14+00 to 16+00 in order to shift traffic shall be incidental to the traffic control items.

The following related work will be paid for under their respective contract bid items:

- Temporary Concrete Barriers
- Work Zone Crash Cushions
- Permanent Pavement Markings
- Flaggers
- Portable – Changeable Message Signs
- Traffic Officers

Work Zone Crash Cushion payment will be limited to the maximum number of units used for the contract at one time, regardless of the duration of the project, except that additional payment will be made for units damaged and replaced.

Partial payments for Maintenance of Traffic Control Devices will be made as follows:

(a) After the Traffic Control Plan is submitted and approved, 15% of the amount bid for Maintenance of Traffic Control Devices will be paid.

(b) After the start of the work, 50% of the amount bid for Maintenance of Traffic Control Devices will be paid.

(c) Upon completion of all work on the project, 100% of the amount bid for Maintenance of Traffic Control Devices will be paid.

There will be no payment for work done under this item after the expiration of contract time.

Failure by the contractor to follow the Contract’s 652 Special Provisions and Standard

Specification and/or The Manual on Uniform Traffic Control Devices (MUTCD) and/or the Contractors own Traffic Control Plan will result in a violation letter and result in a reduction in payment as shown in the schedule below.

The Department's Resident or any other representative of The Department reserves the right to suspend the work at any time and request a meeting to discuss violations and remedies. The Department shall not be held responsible for any delay in the work due to any suspension under this item. Any reduction in payment under this Special Provision will be in addition to forfeiting payment of maintenance of traffic control devices for that day.

ORIGINAL CONTRACT AMOUNT

From **More Than**	Up to and **Including**	Amount of Penalty **Damages per Violation**
$0	$100,000	$250
$100,000	$300,000	$500
$300,000	$500,000	$750
$500,000	$1,000,000	$1,500
$1,000,000	$2,000,000	$2,500
$2,000,000	$4,000,000	$5,000
$4,000,000	and more	$10,000

Payment will be made under:

Pay Item		**Pay Unit**
652.361	Maintenance of Traffic Control Devices	Lump Sum

February 4, 2011
Supersedes February 27, 2003

SPECIAL PROVISION
SECTION 652
MAINTENANCE OF TRAFFIC

Approaches Approach signing shall include the following signs as a minimum. Field conditions may warrant the use of additional signs as determined by the Resident.

Road work Next x Miles
Road work 500 Feet
End Road Work

Work Area At each work site, signs and channelizing devices shall be used as directed by the Resident. Signs include:

Road Work xxxx [1]
One Lane Road Ahead
Flagger Sign

Other typical signs include:

Be Prepared to Stop
Low Shoulder
Bump
Pavement Ends

The above lists of Approach signs and Work Area signs are representative of the contract Requirements. Other sign legends may be required.

The Contractor shall conduct their operations in such a manner that the roadway will not be restricted to one lane for more than 800 m [2,500 ft] at each work area. To encourage quality paving in warm-weather conditions, the length can be extended to 4,000 ft depending on the traffic impacts. Where more than one work area restricts traffic to one lane operation, these work areas shall be separated by at least 1.6 km [1 mile] of two way operation.

Temporary Centerline A temporary centerline shall be placed each day on all new pavement to be used by traffic. The temporary centerline, when specified of reflectorized traffic paint, shall conform to the standard marking patterns used for permanent markings.

Failure to apply a temporary centerline daily will result in a Traffic Control Violation and suspension of paving operations until temporary markers are applied to all previously placed pavement.

[1] "Road Work Ahead" to be used in mobile operations and "Road Work xx ft" to be used in stationary operations as directed by the Resident.

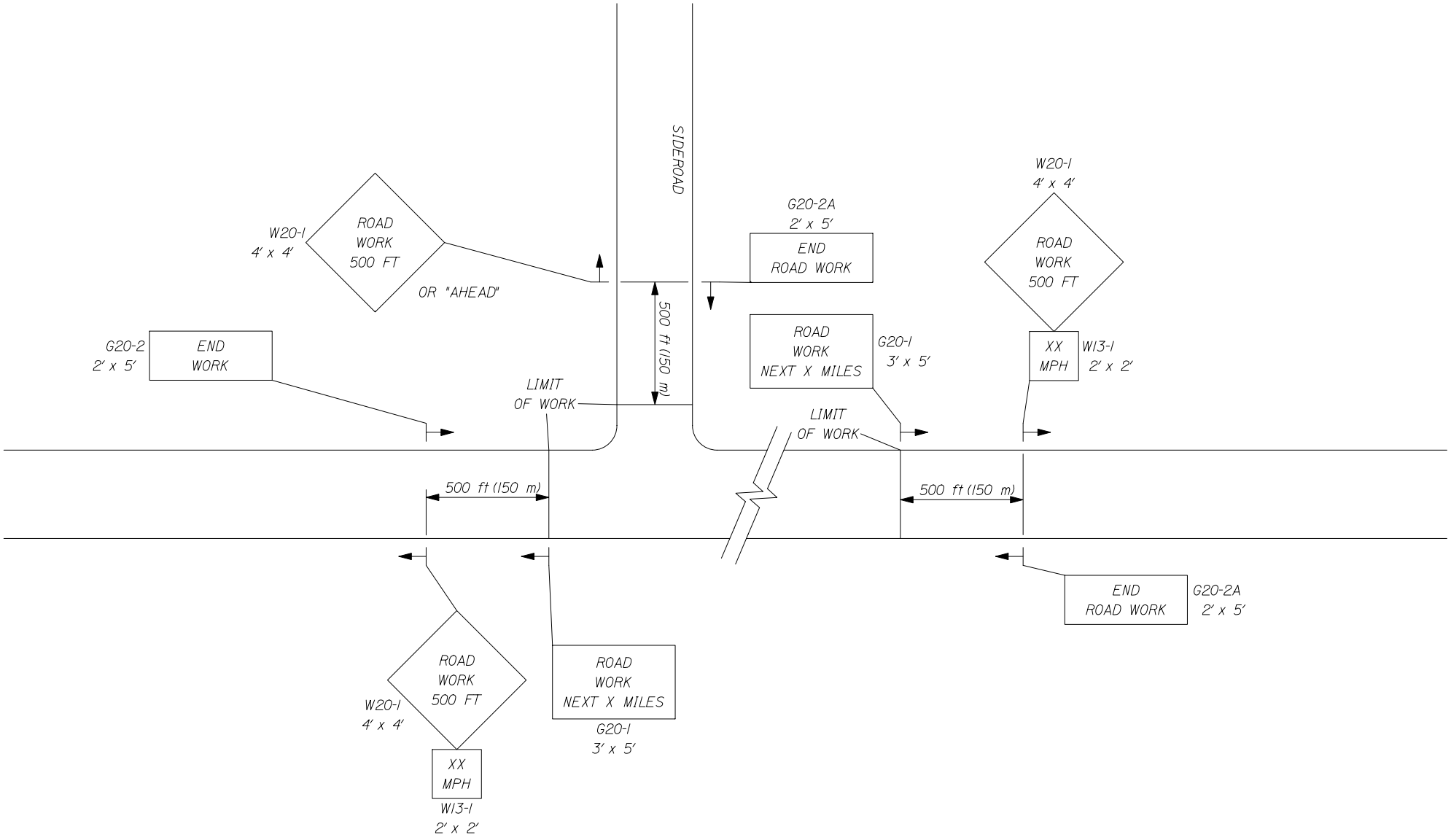

1 of 3

-- PROJECT APPROACH SIGNING --
TWO WAY TRAFFIC

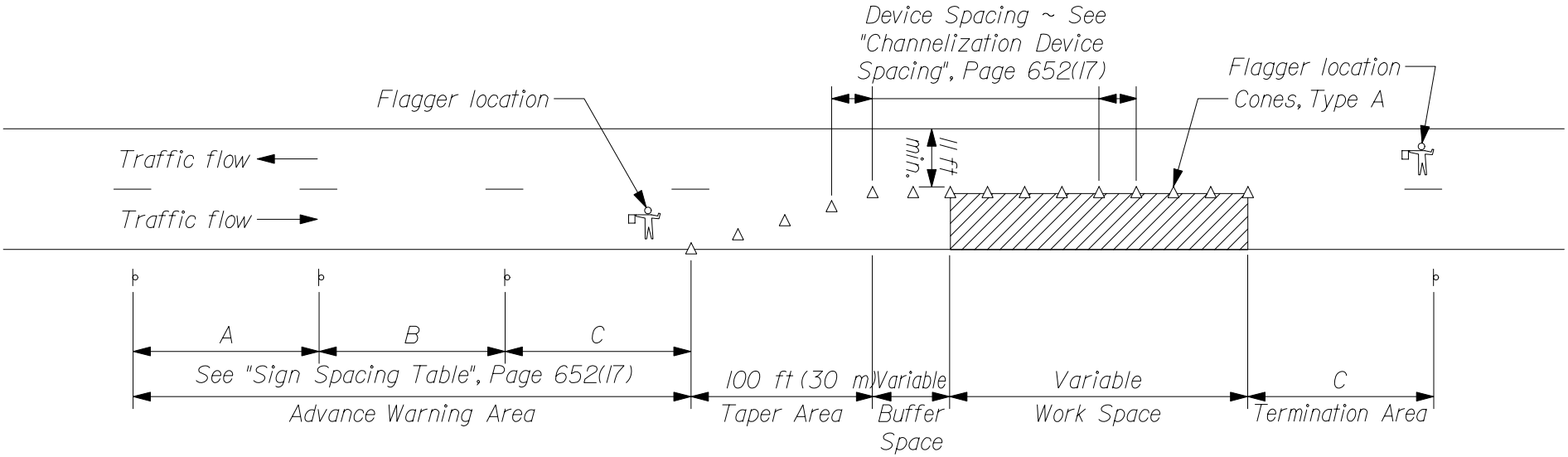

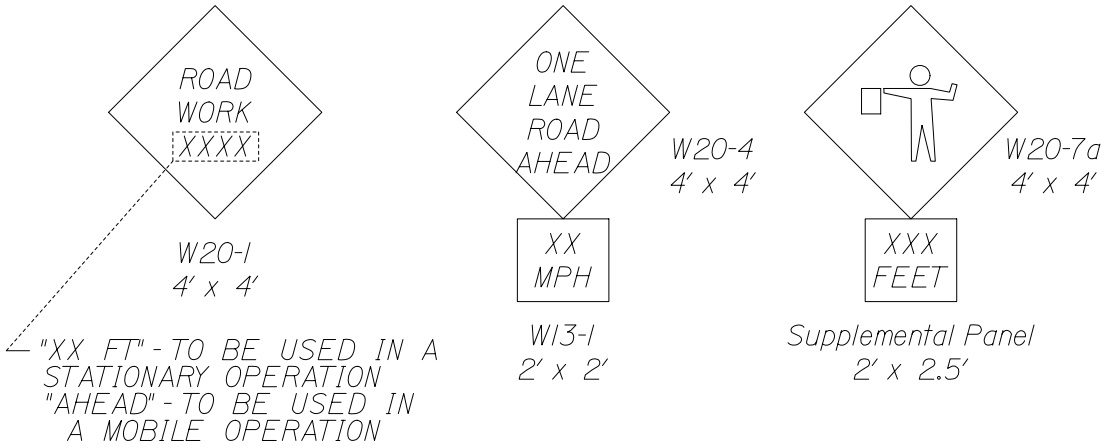

TYPICAL APPLICATION: TWO - WAY, TWO LANE ROADWAY, CLOSING ONE LANE USING FLAGGERS

TYPE OF TAPER	TAPER LENGTH (L)*
Merging Taper	at least L
Shifting Taper	at least 0.5L
Shoulder Taper	at least 0.33L
One-Lane, Two-Way Traffic Taper	100 ft (30 m) maximum
Downstream Taper	100 ft (30 m) per lane

* Formulas for L are as follows:

For speed limits of 40 mph (60 km/h) or less:

$L = \frac{WS^2}{60}$ $\quad (L = \frac{WS^2}{155})$

For speed limits of 45 mph (70 km/h) or greater:

$L = WS$ $\quad (L = \frac{WS}{1.6})$

* Formulas for L are as follows:

A minimum of 5 channelization devices shall be used in the taper.

CHANNELIZATION DEVICE SPACING

The spacing of channelization devices shall not exceed a distance equal to 1.0 times the speed limit in mph when used for taper channelization, and a distance in feet of 2.0 times the speed limit in mph when used for tangent channelization.

SIGN SPACING TABLE			
Road Type	Distance Between Signs**		
	A	B	C
Urban 30 mph (50 km/h) or less	100 (30)	100 (30)	100 (30)
Urban 35 mph (55 km/h) and greater	350 (100)	350 (100)	350 (100)
Rural	500 (150)	500 (150)	500 (150)
Expressway / Urban Parkway	2,640 (800)	1,500 (450)	1000 (300)

**Distances are shown in feet (meters).

GENERAL NOTES;

1. Final placement of signs and devices may be changed to fit field conditions as approved by the Resident.

SUGGESTED BUFFER ZONE LENGTHS

Speed (mph)	Length (feet)	Speed (mph)	Length (feet)
20	115	40	325
25	155	45	360
30	200	50	425
35	250	55	495

April 17, 2007
Supersedes May 10, 2006

SPECIAL PROVISION
SECTION 652
MAINTENANCE OF TRAFFIC
Construction Sign Sheeting Material

Super high intensity fluorescent retroreflective sheeting, ASTM D 4956 - Type VII, Type VIII, or Type IX (prismatic), is required for all construction signs.

SPECIAL PROVISION
SECTION 656
Temporary Soil Erosion and Water Pollution Control

The following is added to Section 656 regarding Project Specific Information and Requirements. All references to the Maine Department of Transportation Best Management Practices for Erosion and Sedimentation Control (a.k.a. Best Management Practices manual or BMP Manual) are a reference to the latest revision of said manual. The latest version is dated "February 2008" and is available at:

http://www.maine.gov/mdot/env/documents/pdf/bmp2008/BMP2008full.pdf

Procedures specified shall be according to the BMP Manual unless stated otherwise.

Project Specific Information and Requirements

The following information and requirements apply specifically to this Project. The temporary soil erosion and water pollution control measures associated with this work shall be addressed in the Soil Erosion and Water Pollution Control Plan (SEWPCP.)

1. Newly disturbed earth shall be mulched by the end of each workday. Mulch shall be maintained on a daily basis.

2. The SEWPCP shall describe the location and method of temporary erosion and sediment control for existing and proposed catch basins, outlet areas and culvert inlets and outlets.

3. **If water is flowing within the drainage system, the water shall be diverted to a stable area or conduit and all work shall be conducted in the dry.** The Contractor's plan shall address when and where the diversions will be necessary. If it is determined by the MaineDOT that work in the wet is required to complete contractual obligations, the **contractor must plan, stage, and phase work such that work in the wet is minimized** to the extent practicable as determined by the MaineDOT resident or representative thereof.

4. Dust control items other than those under Standard Specification 637, if applicable, shall be included in the plan.

5. Permanent slope stabilization measures shall be applied within one week of the last soil disturbance. Temporary slope stabilization is required on a daily basis.

SPECIAL PROVISION
SECTION 656
Temporary Soil Erosion and Water Pollution Control

6. Permanent seeding shall be done in accordance with *Special Provision, Section 618, Seeding* unless the Contract states otherwise.

7. Culvert inlet and outlet protection shall be installed within 48 hours of culvert installation, or prior to a storm event, whichever is sooner.

8. Temporary winter stabilization must be used between November 1st and April 1st or outside of that time period if the ground is frozen or snow covered. Temporary winter stabilization involves, at a minimum, covering all disturbed soils and seeded ground that is not Acceptable Work with an approved method. If temporary winter stabilization practices are used then spring procedures for permanent stabilization shall also be described in the SEWPCP. Use of these methods for over-winter temporary erosion control will be incidental to the contract and be paid for as part of Pay Item 656.75.

9. Construction and demolition debris (including debris from wearing surface removal, saw cut slurry, dust, fresh concrete, concrete debris, etc.) shall be contained and shall not be allowed to discharge to any resource. All construction and demolition debris shall be disposed of in accordance with *Standard Specifications, Section 202.03, Removing Existing Superstructure, Structural Concrete, Railings, Curbs, Sidewalks and Bridges*. Containment and disposal of demolition debris shall be addressed in the Contractor's SEWPCP.

10. If a cofferdam sedimentation basin is used, it shall be located in an upland area where the water can settle and sink into the ground or be released slowly to the resource in a manner that will not cause erosion. The location of such a cofferdam sedimentation basin shall be addressed in the SEWPCP.

11. Prior to release to a natural resource, any impounded water that has been in contact with concrete placed during construction must have a pH between 7.0 and 8.5, must be within one pH unit of the background pH level of the resource and shall have a turbidity no greater than the receiving resource. This requirement is applicable to concrete that is placed or spilled (including leakage from forms) as well as indirect contact via tools or equipment. Water not meeting release criteria shall be addressed in the SEWPCP. Discharging impounded water to the stream must take place in a manner that does not disturb the stream bottom or cause erosion.

SPECIAL PROVISION
SECTION 656
Temporary Soil Erosion and Water Pollution Control

12. The Contractor shall be responsible for monitoring pH with a calibrated meter accurate to 0.1 units. A record of pH measurements shall be kept in the Environmental Coordinator's log (Section 656.4.4.)

SPECIAL PROVISION 700 - MATERIALS

SECTION 702 - BITUMINOUS MATERIAL

702.01 Asphalt Cement Performance Graded Asphalt Binder shall conform to the requirements of AASHTO M 320 or AASHTO MP 19, whichever is indicated in the contract documents. For Performance-Graded Asphalt Binder (PGAB), the Contractor shall arrange for the Supplier to furnish the following items to the Department's Materials Testing Engineer.

a. A Quality-Control Plan for PGAB that conforms to the requirements of AASHTO R 26 "Certifying Suppliers of Performance-Graded Asphalt Binders" and

b. A CERTIFICATE OF ANALYSIS for all asphalt materials furnished for use on the project. The Certificate shall include the actual test results of the material in storage from which the shipments are being made. Certificates shall be supplied for each lot, batch, or blend of each type and grade of material. A new certificate shall be issued at least every 30 days or upon receiving or manufacture of a new material. The original of each Certificate of Analysis shall be mailed to the Departments Materials Testing Engineer.

The Contractor shall give the supplier sufficient advance notice of orders to permit testing. Material not represented by tests will not be accepted for use on the work.

Deliveries of asphalt materials shall be accompanied by a loading invoice, delivery ticket, or slip, as required under Section l08.1.3 f. The Loading Invoice shall include the applicable certificate number and shall include a printed or stamped statement such as the following:

> "THIS IS TO CERTIFY THAT THE ASPHALT MATERIAL REPRESENTED BY THIS LOADING INVOICE CONFORMS TO THE SPECIFICATIONS OF THE PURCHASER FOR THE MATERIAL TYPE AND GRADE STATED THEREON."

In the event an intermediate hauler of the asphalt material is involved, a copy of their own delivery slip shall be furnished, as well as a copy of the supplier's loading invoice. The hauler's delivery slip and the supplier's loading invoice shall be cross-referenced by use of their respective serial numbers.

702.04 Emulsified Asphalt Emulsified Asphalt shall conform to the requirements of AASHTO M 140. Cationic emulsified asphalt shall conform to the requirements of AASHTO M 208.

Use of all emulsified asphalt shall comply with all Department of Environmental Protection (DEP) regulations regarding maximum amount of oil distillate, seasonal limitations, etc.

For emulsified asphalts, the Contractor shall arrange for the Supplier to furnish the following item to the Department's Materials Testing Engineer.

A CERTIFICATE OF ANALYSIS for all asphalt emulsion materials furnished for use on the project. The Certificate shall include the actual test results of the material in storage from which the shipments are being made. Certificates shall be supplied for each lot or batch for each

grade/type of emulsion. A new certificate shall be issued at least every 30 days or upon receiving or manufacture of a new material. The original of each Certificate of Analysis shall be mailed to the Department's Materials Testing Engineer.

Deliveries of emulsion materials shall be accompanied by a loading invoice, delivery ticket, or slip, as required under Section l08.1.3 f. The Loading Invoice shall include the applicable certificate number and shall include a printed or stamped statement such as the following:

> "THIS IS TO CERTIFY THAT THE ASPHALT MATERIAL REPRESENTED BY THIS LOADING INVOICE CONFORMS TO THE SPECIFICATIONS OF THE PURCHASER FOR THE MATERIAL TYPE AND GRADE STATED THEREON."

In the event an intermediate hauler of the asphalt material is involved, a copy of their own delivery slip shall be furnished, as well as a copy of the supplier's loading invoice. The hauler's delivery slip and the supplier's loading invoice shall be cross-referenced by use of their respective serial numbers.

SECTION 703 - AGGREGATES

703.07 Aggregates for HMA Pavements Coarse aggregate and fine aggregate for hot mix asphalt pavements shall be of such gradation that when combined in the proper proportions, including filler, if required, the resultant blend will meet the composition of mixture for the type of pavement specified.

Coarse aggregate, that material retained on the No. 4 sieve, shall be crushed stone or crushed gravel and, unless otherwise stipulated, shall consist of clean, tough, durable fragments free from an excess of soft or disintegrated pieces and free from stone coated with dirt or other objectionable matter. Coarse aggregate, shall not exceed an absorption of 2.0 percent by weight as determined by AASHTO T 85.

Fine aggregate, material that passes the No. 4 sieve, shall consist of natural sand, manufactured sand, or a combination of these. It shall consist of hard, tough grains, free from injurious amounts of clay, loam, or other deleterious substances. Fine aggregate, shall not exceed an absorption of 2.3 percent by weight as determined by AASHTO T 84.

The composite blend, minus any recycled asphalt pavement used (RAP), shall have a Micro-Deval value of 18.0 percent or less as determined by AASHTO T 327. In the event the material exceeds the Micro-Deval limit, a Washington Degradation test shall be performed. The material shall be acceptable if it has a value of 30 or more as determined by Washington State DOT Test Method T 113, Method of Test for Determination of Degradation Value (January 2009 version) except that the reported degradation value will be the result of testing a single composite specimen from that portion of the sample that passes the ½ inch sieve and is retained on the No. 10 sieve, minus any reclaimed asphalt pavement used.

Aggregates shall also meet the following consensus properties, except that aggregates extracted from RAP will not be included in the sand equivalent test. The Department reserves the right to sample and test the composite aggregate for any of the following properties at any time:

TABLE 3: Aggregate Consensus Properties Criteria

Estimated Traffic, Million 18 kip ESALs	AASHTO T 335 Coarse Aggregate Angularity (minimum)	AASHTO T 304 Method A Uncompacted Void Content of Fine Aggregate (min)	ASTM D 4791 (8.4) Flat and Elongated Particles (maximum)	AASHTO T 176 Clay Content/ Sand Equivalent (minimum)
< 0.3	60/60	40	10	45
0.3 to < 3.0	75/60			
3.0 to < 10	85/80	45		
10 to < 30	95/90			
≥ 30	100/100			50

ASTM D 5821 - "85/80 denotes that 85 percent of the coarse aggregate has one fractured face and 80 percent has two fractured faces.

AASHTO T 304 - Criteria are presented as percent air voids in loosely compacted fine aggregate, (U).

ASTM D 4791 - Criteria are presented as maximum percent by weight of flat and elongated particles (5:1 ratio).

The entire HMA wearing course shall come from the same source of material and the same job mix formula, except when permission is obtained from the Department to change sources.

703.08 Recycled Asphalt Pavement Recycled asphalt pavement shall consist of salvaged asphalt materials from milled pavements or production waste that has been processed before use to meet the requirements of the job mix formula. It shall be free of winter sand, granular fill, construction debris, or other materials not generally considered asphalt pavement.

703.081 RAP for Asphalt Pavement Recycled Asphalt Pavement (RAP) may be introduced into hot-mix asphalt pavement at percentages approved by the Department according to the MaineDOT Policies and Procedures for HMA Sampling and Testing. If approved by the Department, the Contractor shall provide documentation stating the source, test results for average residual asphalt content, and stockpile gradations showing RAP materials have been sized to meet the maximum aggregate size requirements of each mix designation. The Department will obtain samples for verification and approval prior to its use.

The maximum allowable percent of RAP shall be determined by the asphalt content, the percent passing the 0.075 mm sieve, and Coarse Micro-Deval loss values as tested by the Department. The numerical average of the percent passing the 0.075 mm sieve values will be used for the approval. The maximum percentage of RAP allowable shall be the lowest percentage as determined according to Table 4 below:

TABLE 4: Maximum Percent RAP According to Test Results

Classification	Maximum RAP Percentage Allowed	Asphalt content standard deviation	Percent passing 0.075 mm sieve	Residual aggregate M-D loss value
Class III	10%	N/A	> 11.0	≤ 18
Class II	20%	≤ 0.5	≤ 11.0	
Class I	30%	≤ 0.3	≤ 8.0	

The Department will monitor RAP asphalt content and gradation during production by testing samples from the stockpile at approximately 15,000 T intervals (in terms of mix production). The allowable variance limits (from the numerical average values used for mix designs) for this testing are determined based upon the maximum allowable RAP percentage, and are shown below in Table 5.

TABLE 5: RAP Verification Limits

Classification	Maximum RAP Percentage Allowed	Asphalt content (compared to aim)	Percent passing 0.075 mm sieve (compared to aim)	Percent passing 0.075 mm sieve
Class III	10%	± 1.5	± 2.0	N/A
Class II	20%	± 1.0	± 1.5	≤ 11.0
Class I	30%	± 0.5	± 1.0	≤ 8.0

For specification purposes, RAP will be categorized as follows:

Class III – A maximum of 10.0 percent of Class III RAP may be used in any base, intermediate base, surface, or shim mixture. A maximum of 20.0 percent of Class III RAP may be used in hand-placed mixes for item 403.209.

Class II – A maximum of 20.0 percent Class II RAP in any base, binder, surface, or shim course.

Class I – A maximum of 20.0 percent Class I RAP may be used in any base, intermediate base, surface, or shim mixture without requiring a change to the specified asphalt binder. A maximum of 30.0 percent Class I RAP may be used in in any base or intermediate base mixture provided that a PG 58-28 asphalt binder is used. A maximum of 30.0 percent Class I RAP may be used in any surface or shim mixture provided that PG 58-34 or 52-34 asphalt binder is used. Mixtures exceeding 20.0 percent Class I RAP must be evaluated and approved by the Department.

The Contractor may use up to three different RAP sources in any one mix design. The total RAP percentage of the mix shall not exceed the maximum allowed for the highest classification RAP source used (i.e. if a Class I & Class III used, total RAP must not exceed 30.0%). The blended RAP material must meet all the requirements of the classification for which the RAP is entered (i.e. 10% Class III with 20% Class I, blend must meet Class I criteria). The Department may take belt cuts of the blended RAP to verify the material meets these requirements. If the

Contractor elects to use more than one RAP source in a design, the Contractor shall provide an acceptable point of sampling blended RAP material from the feed belt.

In the event that RAP source or properties change, the Contractor shall notify the Department of the change and submit new documentation stating the new source or properties a minimum of 72 hours prior to the change to allow for obtaining new samples and approval.

703.09 HMA Mixture Composition The coarse and fine aggregate shall meet the requirements of Section 703.07. The several aggregate fractions for mixtures shall be sized, graded, and combined in such proportions that the resulting composite blends, including RAP aggregate will meet the grading requirements of the following table:

Aggregate Gradation Control Points

Sieve Designation	Nominal Maximum Aggregate Size---Control Points (Percent Passing)					
	Type 25 mm	Type 19 mm	Type 12.5 mm	Type 9.5 mm	Type 9.5 mm Thin Lift Mixture (TLM)	Type 4.75 mm
	Percent By Weight Passing - Combined Aggregate					
37.5 mm	100					
25 mm	90-100	100				
19 mm	-90	90-100	100			
12.5 mm		-90	90-100	100	100	100
9.5 mm		-	-90	90-100	95-100	95-100
4.75 mm		-	-	-90	60-95	80-100
2.36 mm	19-45	23-49	28-58	32-67	40-65	40 - 80
1.18 mm		-	-	-	-	-
600 µm		-	-	-	-	-
300 µm		-	-	-	-	-
75 µm	2.0-6.0	2.0-6.0	2.0-6.0	2.0-7.0*	2.0-7.0*	2.0-7.0

* For 9.5 mm nominal maximum aggregate size mixtures, the maximum design aim for the percent passing the 75 µm sieve is 6.5%.

712.061 Structural Precast Concrete Units Structural precast concrete units shall conform to the dimensions shown on the Plans, the requirements of this Specification and with the reviewed Working Drawings.

Materials Materials for concrete shall conform to the requirements of Standard Specification Section 502.03, Materials. Cement shall be Type I, Type II, or Type III. Coarse aggregate for concrete shall conform to Class A, AA or Latex. The maximum water cement ratio shall be 0.40. For the purpose of calculating water cement ratios, one U.S. gallon of water shall be considered to weigh 8.34 pounds. Concrete shall contain a minimum of 3 gallons per cubic yard of calcium nitrite solution. The minimum 28 day compressive strength shall be 5,000 psi, unless otherwise stated in the Contract.

Material for reinforcing shall meet the requirements of Standard Specification Section 709.01 - Reinforcing Steel or Section 709.02 - Welded Steel Wire Fabric.

Only one mat of steel is required for concrete member thicknesses of seven inches or less; two mats of steel, one at each face, are required for concrete member thicknesses greater than seven inches.

Grout, concrete patching material, and geotextiles shall be one of the products listed on the Department's Qualified Products List (QPL).

Quality Control and Quality Assurance Quality Control (QC) is the responsibility of the Contractor. The Quality Control Inspector (QCI) shall inspect all aspects of the work.

The Contractor shall generate a nonconformance report (NCR) for materials and/or workmanship that is nonconforming. The NCR shall describe the nonconformance and the proposed corrective action. Copies of the NCR shall be provided to the Department’s Quality Assurance Inspector (QAI) and the Fabrication Engineer for review. Nonconforming material and/or workmanship shall be corrected or replaced.

In the event that an item fabricated under this Specification does not meet the Contract requirements but is deemed suitable for use by the Department, it may be accepted in accordance with Section 106.8, Non-Conforming Work, of the Standard Specifications.

Acceptance is the prerogative of the Department. The Department will conduct Quality Assurance (QA) in accordance with Standard Specification Subsection 106.5. Testing deemed necessary by the Department that is in addition to the minimum testing requirements will be scheduled to minimize interference with the production schedule. The QAI will witness or review documentation, workmanship and testing to assure the Work is being performed in accordance with the Contract Documents.

The QAI has the authority to reject materials and products that do not meet the Contract requirements, including Work rejected due to denial of access or the lack of

adequate notice of the beginning of production. The acceptance of material or workmanship by the QAI will not prevent subsequent rejection, if the Work is later found to be unacceptable.

The Contractor shall provide a private office at the fabrication plant for the QAI in accordance with the Facilities for Inspection requirements in Standard Specification Section 535.

Construction The precast units shall be manufactured at a facility that has had a minimum of five years of experience in producing similar type products. The plant shall meet the requirements of AASHTO M-157. Facilities that are certified by the Precast/Prestressed Concrete Institute (PCI) or the National Precast Concrete Association (NPCA) will be considered pre-qualified.

The Contractor shall notify the Department of the planned start of production date of the precast units a minimum of two weeks prior to beginning production for in-Maine work and a minimum of three weeks prior to beginning production for out-of-Maine work. If the production schedule changes, notify the Fabrication Engineer no less than three Working Days prior to the initial production start-up date. Any Work done without the QAI present will be rejected. Advise the Fabrication Engineer of the production schedule and any changes to it. If Work is suspended on a project, the Fabrication Engineer will require 72 hours of notice prior to the resumption of Work.

The Contractor shall calibrate all production equipment on the following schedule, unless there is reason to believe calibration should be performed sooner: Water gauges- every 90 days; admixture dispensers- every 90 days; concrete cylinder compression testing machine- annually; batch plant scales- every six months. Use proving rings, load cells and solid standard weights, as applicable. The calibration shall be performed by a testing laboratory acceptable to the Department, using calibration equipment the accuracy of which is traceable to a National Institute of Standards and Technology (NIST) standard. Provide calibration certifications to the QAI prior to beginning fabrication.

All precast members for a distinct system or Contract Pay Item, including end blocks, steps, caps, box culverts, arch sections, wall units, or other elements, shall be manufactured from the same material sources of aggregates, brand and type of cement and color pigment.

Gradations of coarse and fine aggregates shall be furnished to the QAI prior to beginning work and at least once per week thereafter.

Concrete mix designs shall be submitted for review and approval by the Department prior to use.

Reinforcing steel shall be fabricated, handled, and placed in accordance with Standard Specification Section 503, Reinforcing Steel, and the reviewed Working Drawings.

Forms shall be sufficiently rigid and accurate to maintain the member's dimensions. All forms shall be well built, substantial and unyielding, securely braced, strutted and tied to prevent motion and distortion while concrete is being placed in them. Corners within the forms shall be fitted with consistent width chamfer strips of 5/8 inch ± 1/8 inch mitered at their intersections; all exposed corners shall be chamfered. Forms shall be treated with a bond breaking agent; they shall be clean and free of foreign material.

Recess inserts one inch, unless noted otherwise in the Contract. The QAI is not responsible for verifying the location of inserts or other hardware installed for the convenience of the Contractor.

Curing The units shall be cured by one of the following methods:

1. Curing by Moisture Retention: Cure the concrete in accordance with the latest edition of the Precast/Prestressed Concrete Institute Manual for Quality Control for Plants and Production of Structural Precast Concrete Products (MNL 116), Section 4.20. Moist cure the concrete until it has reached design strength.

   Do not use membrane-forming curing compounds without the approval of the Fabrication Engineer. If membrane-forming curing compounds are authorized, follow the requirements of MNL 116 and the curing compound manufacturer's published recommendations.

2. Accelerated Curing of Concrete: Cure the concrete in accordance with MNL 116, Section 4.19, except as modified herein.

   After initial set, the temperature gain of the concrete shall not exceed 40°F per hour. Initial set shall be determined in accordance with ASTM C403, Standard Test Method for Time of Setting of Concrete Mixtures by Penetration Resistance; a strength gain of 500 psi indicates initial set. The maximum allowable concrete temperature shall be 160°F. Concrete temperature shall be measured during curing with recording thermometers. In order to qualify for accelerated cure, the concrete temperature shall attain a minimum temperature of 120°F; that temperature shall be maintained for a minimum of 8 hours and the concrete shall achieve a minimum of 80 percent of design strength.

   The accelerated curing cycle shall be considered complete when the method of supplying heat is stopped and/or the concrete temperature drops below 120°F. Two cylinders shall be tested immediately upon completion of the accelerated cure cycle. Products that have not achieved all of the above criteria shall be moist cured until the concrete has achieved design strength.

If the precast units have achieved 80 percent of design strength during the accelerated curing cycle, no further curing will be required.

The forms shall remain in place until the concrete attains a minimum compressive strength of 3,000 psi.

Concrete Testing Acceptance of structural precast units, for each day's production, will be determined by the Department, based on compliance with this specification and satisfactory concrete testing results. Process control test cylinders shall be made and tested in accordance with the following standards:

AASHTO T 22 (ASTM C39) Test Method for Compressive Strength of Cylindrical Concrete Specimens
AASHTO T23 (ASTM C31) Practice for Making and Curing Concrete Test Specimens in Field
AASHTO T141 (ASTM C172) Practice for Sampling Freshly Mixed Concrete
AASHTO T152 (ASTM C231) Test Method for Air Content of Freshly Mixed Concrete by the Pressure Method
AASHTO T196 (ASTM C173) Standard Test Method for Air Content of Freshly Mixed Concrete by the Volumetric Method
ASTM C1064 Test Method for Temperature of Freshly mixed Portland Cement Concrete
ASTM C1611 Standard Test Method for Slump Flow of Self-Consolidating Concrete

Tested concrete shall conform to the following:

a. Temperature shall be from 40° F to 85° F.
b. Air content shall be 5.5% to 7.5%; concrete with higher air content may be used, at the Contractor's option, provided extra cylinders are made to demonstrate that stripping strength and design strength are achieved.
c. Slump flow shall be homogenous with no sign of segregation.
d. Visual stability index (VSI) of SCC shall not exceed 1; if a mortar paste halo is present it shall not exceed an average of 0.25 inch.

The Contractor shall cast a minimum of 8 concrete test cylinders for each continuous concrete placement, for QC purposes: 2 cylinders shall be standard cured in accordance with AASHTO T23 (ASTM C31) to be tested for 28 day strength; and a minimum of 6 cylinders shall be field cured under the same conditions as the units and tested for stripping and design strength. Unit identification, entrained air content, water-cement ratio, slump flow and temperature of the sampled concrete shall be recorded at the time of cylinder casting. The Contractor shall perform all testing in the presence of the QAI. The QAI will designate the loads to be tested.

At least once per week, the Contractor shall make 2 concrete cylinders (6 cylinders when the Contract includes permeability requirements) for use by the Department; cylinders shall be standard cured in accordance with AASHTO T23 (ASTM C31).

If the Contractor fails to make enough cylinders to demonstrate that the product meets the Contract requirements, the product will be considered unacceptable.

The compressive strength of the concrete will be determined by averaging the compressive strength of two test cylinders made from the same sample. For the purpose of determining design strength, the average of two cylinders shall meet or exceed the design strength, and the difference in strength between the two shall be no more than 10 percent of the higher strength cylinder.

Perform compressive strength testing to determine transfer and design strength in the presence of the QAI. Cylinder tests not witnessed by the QAI will not be acceptable.

All QC Inspectors performing concrete testing shall hold a current ACI Field Testing Technician Grade I Certification, or other equivalent certification.

Surface Finish and Repairs Exposed surfaces shall be finished and repaired in conformance with the referenced specification. If the finish is not specified, then surfaces shall have a uniform appearance; only minor repairs to remove and blend fins, patch minor spalls, tie holes and handling device recesses and to repair small, entrapped air pockets, shall be permitted.

Tolerances Dimensional tolerances shall be in conformance with the applicable referenced specification or the established industry standards for the product being produced.

Documentation The producer of the structural precast units shall keep accurate records of aggregate gradations, concrete batching, testing, curing, and inspection activities, verifying that forms, reinforcing and unit dimensions conform to these requirements. Copies of reports shall be furnished to the Department.

Marking The date of manufacture, production lot number and type of unit shall be clearly and indelibly inscribed by the Contractor on a rear or unexposed portion of each unit.

Handling, Storage and Shipping The Contractor shall handle, store, and ship units in such a manner as to prevent chipping, cracking, fractures, and excessive bending stresses. Damaged units shall be repaired or replaced.

January 3, 2003

SPECIAL PROVISION
SECTION 823
GATE VALVE BOXES

Description This work shall consist of the adjustment or installation of gate valve boxes as indicated in the Bid Book, Plans, or as directed by the Resident.

Gate Valve Box, Adjust to Grade shall consist of adjusting a gate valve box to the required final grade, including any lowering and any other adjustments that may be necessary prior to setting the final grade.

Gate Valve Box, Install Only shall consist of removing an existing gate valve box, installing a replacement gate valve box, and adjusting the replacement gate valve box as specified above.

Materials The municipality or utility company owning or operating the existing water main system will provide all replacement gate valve boxes necessary for the Gate Valve Box, Install Only item. Any gate valve boxes damaged by improper construction methods or handling by the Contractor, as determined by the Department, shall be replaced at the Contractor's expense.

Method of Measurement Gate Valve Box, Adjust to Grade and Gate Valve Box, Install Only will be measured by the unit each, complete and in place.

Basis of Payment Payment for Gate Valve Box, Adjust to Grade shall be full compensation for all equipment, labor, and incidental materials necessary to adjust a gate valve box as specified above.

Payment for Gate Valve Box, Install Only shall be full compensation for all equipment, labor, and incidental materials necessary to replace and adjust a gate valve box as specified above.

Pay Item		Pay Unit
823.011	Gate Valve Box, Install Only	Each
823.332	Gate Valve Box, Adjust to Grade	Each

SPECIAL PROVISION
SECTION 827
GAS MAIN TRENCH
EXCAVATION & BACKFILL

Description:

The work under this item includes all labor, materials and equipment necessary to complete the work specified in this Section, complete in place, including but not limited to the following:

- Excavation.
- Gas pipe line bedding sand placement.

Limits of Work:

The Resident and the Contractor will locate in the field the locations and limits of work to which the Drawing details and quantities will be applied.

Materials:

Bedding sand shall consist of granular material free of angular aggregate produced from blasting or crushing operations. Grain size distribution shall consist of the following:

- 100% passing the ½ inch sieve
- 0 to 70% passing the #40 sieve
- 0 to 10% passing the #200 sieve

One conformance test shall be required prior to backfilling operations.

Construction Methods:

The trench width shall be sufficient to install the gas main and allow for sufficient compaction of the bedding sand as shown below.

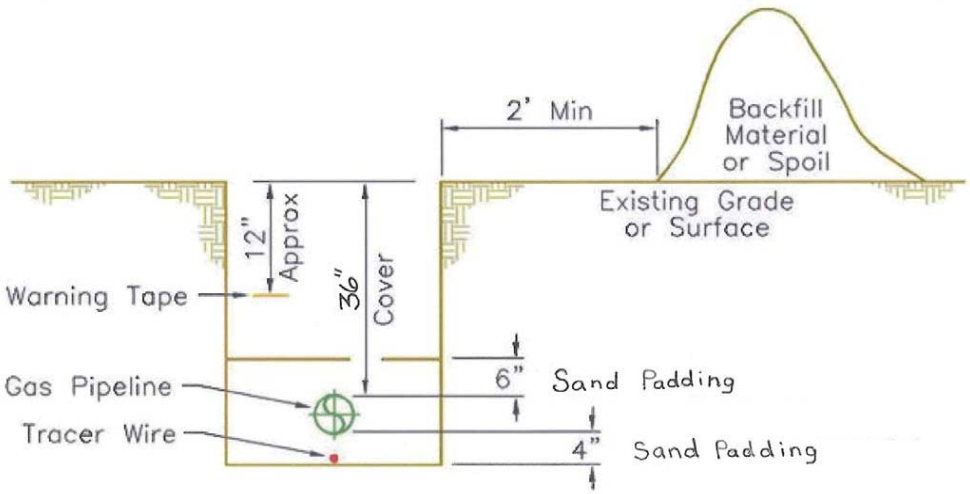

Bedding sand shall be placed in maximum lift thickness of 6 inches, loose measure, with moisture content sufficient to achieve a consistent course, as accepted by the Owner. Compaction shall be with a minimal of 4 passes of a vibratory plate compactor, with a minimal static weight of 250 pounds, sufficient to achieve a consistent course, as accepted by Owner in place.

The labor, materials and equipment necessary to complete the gas main installation and necessary appurtenances including but not limited to the items listed below, will be supplied and installed by the gas main owner.

- Gas main piping and associated fittings
- Warning tape
- Tracer wire

Method of Measurement:

Gas Main Trenching measured for payment shall consist of the actual number of linear feet as measured along the centerline of the trench as excavated and backfilled. Payment shall also be compensation for coordination and maintaining communications with the gas main owner.

Basis of Payment:

The accepted quantity of Gas Main Trenching will be paid for at the Contract unit price per linear foot complete in place. Price shall include all materials, equipment, tools and labor incidental thereto.

Payment will be made under:

Pay Item		**Pay Unit**
827.362	Gas Main Trenching	Linear Foot

APPENDIX B

SPECIAL PROVISION
SECTION 830
GAS MAIN CROSSING HANGER SYSTEM

Description

This work shall consist of installing structural rigid gas utility supports S1, as noted in the plans, and as directed by the Resident. The work also includes the attachment of owner supplied hangers with roller support assembly on utility support channels embedded in the concrete bridge deck and as specified herein.

Installation

A. General:
1. Install in accordance with MSS SP-58, MSS SP-69, MSS SP-89 and at a minimum, install supports, bolts, or other supporting devices at each location indicated on the Drawings.
2. Install all supports, bolts and other supporting devices of size and spacing to prevent loads from exceeding the manufacturer's maximum recommended loading with a safety factor of 5.
3. Install lock washers or locknuts on, supports, bolts and other supporting devices.

B. Spacing:
1. Install hanger with roller support assemblies at utility support channel locations, as shown in the plans.
2. Maximum spacing of hangers and supports: 10’-0”

C. Gas main installation
1. The owner will assemble and weld the gas main.
2. The contractor shall assist the owner installing the gas main onto the support system.

Materials

The gas utility company owning or operating the gas main system will provide the hangers with roller support assembly system and gas main material. Any supplied materials damaged by improper construction methods or handling by the Contractor, as determined by the Department, shall be replaced at the Contractor’s expense.

Method of Measurement

Gas Main Bridge Crossing Hanger System shall be measured by the lump sum.

Basis of Payment

The accepted quantity of Gas Main Bridge Crossing Hanger System for the bridge crossing shall be full compensation for installing the structural rigid supports as shown in the details and installation of gas utility company supplied pipe roller support assembly system. Price shall include all equipment, tools, labor, and incidental materials incidental thereto. Contractor assistance for installation of the gas main onto the support system is not included in this item, and will be paid at the appropriate hourly equipment rate.

Payment will be made under:

Pay Item	**Description**	**Pay Unit**
830.16	Gas Main Bridge Crossing Hanger System	Lump Sum

SPECIAL PROVISION
SECTION 830
(Utility Conduit Bridge Crossing Hanger System – Lighting)

Description This item shall consist of all work shown in the Plans and described in this special provision. This special provision is limited to the work on the highway bridge and up to and including the conduit expansion joint assemblies located at each abutment backwall. Work related to the bridge approaches outside these limits is addressed in the separate Section 634 Highway Lighting special provision.

The Bridge work between each abutment of the bridge shall consist of furnishing and installing all materials and labor for the installation of one (1) 2-inch Schedule 40 PVC plastic conduit throughout the entire length of bridge between abutments including conduit, expansion joints, FRP conduit supports, conduit support hardware with all of their components and incidentals related to these items necessary to complete the work. The owner's name shall be clearly labeled and visible at each end of the bridge on their respective conduit to differentiate it from conduits intended for other utility owners.

The Bridge work shall include the junction box and conduit in the pier diaphragm up to the light mast pedestal of the highway bridge, as detailed on the plans.

CONSTRUCTION REQUIREMENTS

Materials The Contractor shall be responsible for the furnishing and fabrication of all material and associated hardware as shown in the Plans and described in this specification.

The materials furnished by the Contractor shall be new. All materials shall conform to NEMA or UL standards as applicable. Non-metallic conduit shall meet the requirements of Section 715.03 – Non-Metallic Conduit. The conduit shall have a pull-line of polypropylene rope of a minimum of ¼ inch diameter extending through the entire run to north and south tie-in points as located on the Plans.

The Contractor shall, within 60 days following execution of the contract, submit a list of materials which are to be installed. The list shall include the manufacturer, size, and identifying number of each item. The list shall be supplemented by such data as may be required, including detailed scale drawings of proposed minor deviations from the plans. The Contractor shall submit for review, design data and sample articles of the material proposed for use. All of the data shall be submitted in duplicate.

Workmanship shall conform to the requirements of: NEC, NESC, ASTM Standards, and the ANSI, the State of Maine, Manufacturer's Specifications, and any local ordinances that may apply except when otherwise noted on the Plans or in the Special Provisions.

Conduits shall be of the sizes noted on the Plans, which are indicated as the nominal inside diameter.

The Contractor shall be responsible for and shall repair all damage caused to underground drainage

structures, utilities, or lighting conduit, which are encountered during construction.

Trenches for conduits shall be excavated to a width that will permit proper installation of the conduit and to the depth shown on the Plans or as directed. Minimum cover under the roadway shall be 36 inches. After the trench has been excavated as specified, the bottom of the trench shall be prepared with a sand bedding material. After placing the conduit, sand shall be placed around the sides and over the top of the conduit. The entire trench shall be backfilled with an approved material, placed in layers not exceeding eight inches (8”), and thoroughly tamped.

The bottom of trenches shall be lined with a 3” bedding material of tamped sand before laying the conduit. Backfill to a compacted depth of 6” above the top of the conduit shall be sand, free from rocks or hard lumps.

All underground conduits shall be placed to at least the depth shown on the plans and shall not interfere with poles, guardrail posts, approach rail anchor block, sign foundations or other objects. Conduits shall be made watertight by joining with solvent or in accordance with the manufacturer’s specifications. If necessary, conduit may be bent (36-inch minimum radius) carefully to avoid damage and without the use of an open flame. Bends sharper than 45 degrees will not be permitted. The total angle of all bends in one run and the radius of bends shall conform to the NEC requirements.

Conduits placed in the bridge superstructure shall be securely supported and fastened as shown on the Plans to maintain the conduit’s position. All metallic hardware shall be hot dipped galvanized steel and shall meet or exceed requirements of ASTM A507 with ASTM 153 for galvanizing. Metal components that are custom fabricated shall have hot dipped galvanizing applied in accordance with ASTM A153 with a minimum coating of 2.0 oz./sq. ft. using high grade zinc conforming to ASTM B6-00 with less than .03% lead used in the process.

The Contractor shall install a pull-line in the conduit. The ends of the lines shall be secured in such manner as to prevent accidental withdrawal of the wire. All conduit ends shall be capped with watertight conduit caps.

The Contractor shall provide a metal tracer wire and a 2” wide “buried cable” plastic warning tape located 12” below grade at the underground conduit.

Design The lighting support system shall be designed by a registered Professional Engineer and all plans, computations, and working drawings shall be signed by that Engineer, and shall be submitted to the Resident for approval. The support system design shall include the threaded rod and hanger, expansion joint design and locations, attachment of junction box to pier diaphragm, and conduit layout embedded in the pier diaphragm concrete. The maximum support spacing shall be ten (10) feet at each utility support channel, as detailed on the plans.

Hangers Acceptable hanger manufacturers for 2” non-metallic conduit include the following:

1. Allied Tube & Conduit.
2. Cooper B-Line, Inc.; a division of Cooper Industries.
3. Unistrut; Tyco International, Ltd.
4. Approved Equal.

Junction Boxes Exterior exposed junction boxes shall be Cast, deep type. Outlet boxes for exterior use shall be of the weatherproof cast metal type, with threaded hubs. Outlet boxes for exterior work shall be cast metal or alloy with screw-fastened covers and gaskets, and with threaded conduit connections. Fasteners shall be stainless steel or brass. Enclosure types shall be used as follows: NEMA 3R/12 - Exterior and wet locations on outdoor structures where moisture is present or NEMA 4X where subject to heavy splash or corrosive agents.

The box shall be not less than 1-1/2 inches deep, of physical size as required by NEC for the number and size of conductors involved; shall be securely mounted to the structure with supporting facilities independent of the raceways entering or leaving. Acceptable manufacturers for the junction box at the pier are the following:

1. Appleton.
2. Raco.
3. Crouse-Hinds
4. Steel City.
5. Approved Equal.

Expansion Joints Expansion fittings in the superstructure shall be double “O”-ring type expansion couplings with a movement capacity determined by the Engineer. During the installation of long runs of conduit, one end shall be left unconnected or a double “O”-ring expansion coupling inserted near one end of the run until the final covering of the conduit is in progress to allow for expansion and contraction. FRP expansion is about 1/3rd that of PVC or comparable to stainless steel and should be accounted for in accordance with NEC 2011 Article 355.44.

Basis of Payment Payment for Utility Conduit Bridge Crossing Hanger System – Lighting shall be full compensation for all materials, equipment, labor, and hardware necessary to install the conduit. Payment for work shall include furnishing and installing bridge utility support system including brackets, spacers, bolts, design calculations & plans, junction boxes, expansion joints, and threaded anchor rods, furnishing and installing conduits (including pull-lines and conduit sleeves for each conduit), and the required excavation and backfill with granular borrow.

Method of Measurement No measurement shall be made.

Pay Item	Description	Pay Unit

830.17	Utility Conduit Bridge Crossing Hanger System – Lighting	Lump Sum

Required Pre-Installation Meeting: Before beginning any utility installation work a utility meeting shall be held with all utilities, the MaineDOT Resident, and MaineDOT Utility Coordinator (Calvin Seeley).

SPECIAL PROVISION
SECTION 830
(Utility Conduit Bridge Crossing Hanger System – Multi-Use Bridge Lighting)

Description This item shall consist of all work shown in the Plans and described in this special provision. This special provision is limited to the work on the multi-use bridge and up to and including the conduit expansion joint assemblies located at each abutment backwall. Work related to the bridge approaches outside these limits, and work on the highway bridge, are addressed in separate special provisions.

The Bridge work between each abutment shall consist of furnishing and installing all materials and labor for the installation of one (1) 2-inch and Schedule 40 PVC plastic conduit throughout the entire length of bridge between abutments including conduit, (2) 1-inch Schedule 40 PVC plastic conduits running between light fixtures on the bridge, (4) LED light fixtures (with powder coated steel mounting brackets for installation in the timber railing guard of the ornamental rail), (4) ½-inch liquid tight flexible conduit feeds to LED light fixtures, junction boxes and/or fittings as needed to make conduit transitions and connections, expansion joints, and conduit support hangers with all of their components and incidentals related to these items necessary to complete the work. The owner's name shall be clearly labeled and visible at each end of the bridge on their respective conduit to differentiate it from conduits intended for other utility owners.

CONSTRUCTION REQUIREMENTS

Materials The Contractor shall be responsible for the furnishing and fabrication of all material and associated hardware as shown in the Plans and described in this specification.

The materials furnished by the Contractor shall be new. All materials shall conform to NEMA or UL standards as applicable. Non-metallic conduit shall meet the requirements of Section 715.03 – Non-Metallic Conduit. The conduit shall have a pull-line of polypropylene rope of a minimum of ¼ inch diameter extending through the entire run to north and south tie-in points as located on the Plans.

The Contractor shall, within 60 days following execution of the contract, submit a list of materials which are to be installed. The list shall include the manufacturer, size, and identifying number of each item. The list shall be supplemented by such data as may be required, including detailed scale drawings of proposed minor deviations from the plans. The Contractor shall submit for review, design data and sample articles of the material proposed for use. All of the data shall be submitted in duplicate.

Workmanship shall conform to the requirements of: NEC, NESC, ASTM Standards, and the ANSI, the State of Maine, Manufacturer's Specifications, and any local ordinances that may apply except when otherwise noted on the Plans or in the Special Provisions.

Conduits shall be of the sizes noted on the Plans, which are indicated as the nominal inside diameter.

The Contractor shall be responsible for and shall repair all damage caused to underground drainage structures, utilities, or lighting conduit, which are encountered during construction.

Trenches for conduits shall be excavated to a width that will permit proper installation of the conduit and to the depth shown on the Plans or as directed. Minimum cover under the roadway shall be 36 inches. After the trench has been excavated as specified, the bottom of the trench shall be prepared with a sand bedding material. After placing the conduit, sand shall be placed around the sides and over the top of the conduit. The entire trench shall be backfilled with an approved material, placed in layers not exceeding eight inches (8”), and thoroughly tamped.

The bottom of trenches shall be lined with a 3” bedding material of tamped sand before laying the conduit. Backfill to a compacted depth of 6” above the top of the conduit shall be sand, free from rocks or hard lumps.

All underground conduits shall be placed to at least the depth shown on the plans and shall not interfere with poles, guardrail posts, approach rail anchor block, sign foundations or other objects. Conduits shall be made watertight by joining with solvent or in accordance with the manufacturer’s specifications. If necessary, conduit may be bent (36-inch minimum radius) carefully to avoid damage and without the use of an open flame. Bends sharper than 45 degrees will not be permitted. The total angle of all bends in one run and the radius of bends shall conform to the NEC requirements.

Conduits placed in the bridge superstructure shall be securely supported and fastened as shown on the Plans and/or as detailed in the approved shop drawings to maintain the conduit’s position. The support rods, intermediate rods, and all metallic hardware shall be hot dipped galvanized steel and shall meet or exceed requirements of ASTM A507 with ASTM 153 for galvanizing. Metal components that are custom fabricated shall have hot dipped galvanizing applied in accordance with ASTM A153 with a minimum coating of 2.0 oz./sq. ft. using high grade zinc conforming to ASTM B6-00 with less than .03% lead used in the process.

The Contractor shall install a pull-line in the conduit. The ends of the lines shall be secured in such manner as to prevent accidental withdrawal of the wire. All conduit ends shall be capped with watertight conduit caps.

The Contractor shall provide a metal tracer wire and a 2” wide “buried cable” plastic warning tape located 12” below grade at the underground conduit.

The brackets for installing the multi-use bridge light fixtures shall be constructed of steel conforming with ASTM A 36/A 36M. Brackets shall be galvanized and powder coated with the duplex powder coating over galvanizing coating contained in Special Provision 506, Shop Applied Protective Coating – Steel. Color shall be black (semi-gloss), Federal Standard 595B #27038. Finish metal fabrications after fabrication. Provide fasteners as indicated on the drawings. Provide Type 304 or 316 stainless-steel fasteners for exterior use. Select fasteners for type, grade, and class required.

Type BM Site Lighting Luminaire LED Step Light fixture size 3-1/2”Hx 9”Wx 3-1/2”D mounted horizontally, lens up, in 4” timber toe-rail. Fixture shall be UL listed for wet locations. The fixture housing shall have cool external temperatures and the luminaire shall be cool to the touch. The finish (Black) shall be zinc-rich primer and thermoset polyester powdercoat electrostatically applied after a five-stage conversion cleaning process and bonded by heat fusion thermosetting for durability; laboratory tested in accordance with ASTM B117 specification.

The optical assembly shall have an opal lens made of UV stabilized injection molded polycarbonate; specular aluminum formed reflector. Lens shall conceal lamp/LED image. The fixture shall have an integral electronic LED driver. UL class 2. -40ºC/F minimum starting temperature, pre-wired with high temperature wire. Input voltage 120VAC, with integral surge protector built into LED driver circuit, Lamping shall be 6 total watts (5) 1W LEDs. Basis of design for fixture and mounting structure is the Hadco - LED Steplyte (RSF2)

Design The conduit support system shall be designed by a registered Professional Engineer and all plans, computations, and working drawings shall be signed by that Engineer, and shall be submitted to the Resident for approval. The support system design shall include the threaded rod and hanger, expansion joint design and locations, attachment of junction boxes, and conduit layout. The maximum support spacing shall be coordinated with the truss fabricator and shall be determined by the Engineer.

Hangers Acceptable hanger manufacturers for non-metallic conduit include the following:

1. Allied Tube & Conduit.
2. Cooper B-Line, Inc.; a division of Cooper Industries.
3. Unistrut; Tyco International, Ltd.
4. Approved Equal.

Junction Boxes Exterior exposed junction boxes shall be Cast, deep type. Outlet boxes for exterior use shall be of the weatherproof cast metal type, with threaded hubs. Outlet boxes for exterior work shall be cast metal or alloy with screw-fastened covers and gaskets, and with threaded conduit connections. Fasteners shall be stainless steel or brass. Enclosure types shall be used as follows: NEMA 3R/12 - Exterior and wet locations on outdoor structures where moisture is present or NEMA 4X where subject to heavy splash or corrosive agents.

The box shall be not less than 1-1/2 inches deep, of physical size as required by NEC for the number and size of conductors involved; shall be securely mounted to the structure with supporting facilities independent of the raceways entering or leaving. Acceptable manufacturers for the junction boxes are the following:

1. Appleton.
2. Raco.

3. Crouse-Hinds
4. Steel City.
5. Approved Equal.

Expansion Joints Expansion fittings in the superstructure shall be double "O"-ring type expansion couplings with a movement capacity determined by the Engineer. During the installation of long runs of conduit, one end shall be left unconnected or a double "O"-ring expansion coupling inserted near one end of the run until the final covering of the conduit is in progress to allow for expansion and contraction. Expansion should be accounted for in accordance with NEC 2011 Article 355.44.

Light Mounting Brackets Light mounting brackets shall be furnished and installed as detailed on the City railing plans.

Type BM Site Lighting Flex Connections Contractor shall provide conduit connections at fixture. Connections shall utilize UL listed ½" liquid-tight flexible conduits, mounted at the ends of the fixture, conduit shall be concealed in the mounting housing, see bridge structure details. Rigid conduits shall be mounted from under bridge structure, see one-line diagram for conduits size mounted to bridge. Provide conduit reducer as required to connect to flexible conduits route flex through access hole in decking to connect to fixture. Provide and utilize 120V photocell, mounted at panel board, to regulate dusk to dawn operation of luminaires, provide override switch, lockable. Provide weatherproof enclosure and mount securely adjacent to existing Panelboard.

Basis of Payment Payment for Utility Conduit Bridge Crossing Hanger System – Multi-Use Bridge Lighting shall be full compensation for all materials, equipment, labor, and hardware necessary to install the lighting system on the multi-use bridge. Payment for work shall include furnishing and installing bridge utility support system including brackets, spacers, hangers, design calculations & plans, junction boxes, expansion joints, and threaded anchor rods, furnishing and installing conduits (including pull-lines and conduit sleeves for each conduit), and the required excavation and backfill with granular borrow. Payment shall also include furnishing and installing the LED light fixtures, fixture installation brackets, fasteners, and all wiring and wiring connections necessary for the proper operation of the light fixtures.

Method of Measurement No measurement shall be made.

Pay Item	Description	Pay Unit
830.17	Utility Conduit Bridge Crossing Hanger System – Multi-Use Bridge Lighting	Lump Sum

Required Pre-Installation Meeting: Before beginning any utility installation work a utility meeting shall be held with all utilities, the MaineDOT Resident, and MaineDOT Utility Coordinator (Calvin Seeley).

SPECIAL PROVISION
SECTION 841
(Bollard)

Description This work shall consist of furnishing and installing fixed steel tube bollards, reinforced concrete foundation, and associated hardware necessary to complete the work as detailed on the plans. All earthwork, excavation, concrete, compacted backfill shall be incidental to the bollard.

Materials

1. The main body of the product shall be constructed from ASTM A500 in accordance with Section 713.01 steel and be accompanied with steel mill certifications/test reports for the steel being used to ensure the durability and performance of the product. Secondary and non-ASTM steel may not be substituted.
2. The reinforced concrete base circular pier footing shall meet the general requirements of Section 502 – Structural Concrete, Class A.

Construction Requirements

Steel Bollards shall be spaced and located as shown on the plans. Final locations shall be adjusted in the field.

Finish

1. The steel bollard base shall be galvanized in accordance with Special Provision 506.
2. The lid, top plate and fasteners shall be Series 300 stainless steel.

Method of Measurement Bollards and all necessary incidentals to complete the work shall be paid for by each complete and accepted in place.

Basis of Payment The quantity of bollards will be paid for by the contract unit price for each installation. Such payment will be full compensation for all labor, excavation, backfill, tools, associated hardware, and any other incidentals necessary to complete the work.
Payment will be made under:

Pay Item		Pay Unit
841.48	Bollard	Each

Westbrook
Bridge Street Bridge
WIN: 019282.00
September 24, 2013

SPECIAL PROVISION
SECTION 841
(Removable Bollard)

Description. This work shall consist of furnishing and installing removable steel tube bollards, reinforced concrete foundation, and associated hardware necessary to complete the work as detailed on the plans. All earthwork, excavation, compacted backfill shall be incidental to the bollard.

Materials

1. The main body of the product shall be constructed from ASTM A500 in accordance with Section 713.01 steel and be accompanied with steel mill certifications/test reports for the steel being used to ensure the durability and performance of the product. Secondary and non-ASTM steel may not be substituted.
2. The reinforced concrete base circular pier footing shall meet the requirements of Section 502 – Structural Concrete, Class A and shall be reinforced with steel bars meeting the requirements of Section 503 – Reinforcing Steel, Plain Reinforcing Steel. The pier dimensions and reinforcing layout shall be as per the manufacturer's recommendations.

Construction Requirements

1. Steel Bollards shall be spaced and located as shown on the plans. Final locations shall be adjusted in the field.
2. Bollard shall remove completely from the base unit. The bollard body shall be no more than eight (8) inches below grade to allow for minimal lifting efforts.
3. The removable bollard shall be lockable with a padlock. The padlock and keys will be provided by the City of Westbrook, and shall be in-place before the new bridge is open to traffic.

Manufacturer Acceptable products and manufacturers include:

1. Maxi*Force* Removable Bollard (Model: MRHP-RS1-HDH5) as manufactured by Blue Ember Technologies, LLC
2. Approved equal.

Finish

1. The bollard shall have a powder-coated green (RAL6005) finish in accordance with Special Provision 506.
2. The steel bollard base shall be galvanized in accordance with Special Provision 506.
3. The lid, top plate and fasteners shall be Series 300 stainless steel.

Method of Measurement Bollards and all necessary incidentals to complete the work shall be paid for by each complete and accepted in place.

Basis of Payment The quantity of bollards will be paid for by the contract unit price for each installation. Such payment will be full compensation for all labor, excavation, backfill, tools, associated hardware, and any other incidentals necessary to complete the work.

Payment will be made under:

Pay Item		Pay Unit
841.481	Removable Bollard	Each

SPECIAL PROVISION
SECTION 845
STRUCTURAL STEEL UTILITY SUPPORT

Description

This work shall consist of furnishing and installing structural steel utility supports, denoted *Utility Supports* in the plans, and as directed by the Resident. These steel utility support channels are cast in the concrete bridge deck and are common to each utility at each support location along the bridge spans.

Materials

Materials shall meet the requirements of the following Section of Division 700-Materials

Structural Steel	713.01

Structural steel utility supports shall be hot dipped galvanized in accordance with the requirements of Section 504 Structural Steel and shall be Grade 36 steel.

Installation

The Contractor shall install anchor rods and support channels to be cast in the superstructure slab at each location indicated on the Drawings.

Submittals

The Contractor shall prepare shop detail, erection and other necessary working drawing in accordance with Section 105.7 - Working Drawings. The drawings will be reviewed and approved in accordance with the applicable requirements of Section 105.7.

Method of Measurement

Structural steel utility supports properly placed and accepted into the superstructure slab shall be measured for payment as follows:

Structural Steel Utility Support shall be measured by the lump sum.

Basis of Payment

The accepted quantity of Structural Steel Utility Support for the bridge crossing shall be full compensation for furnishing and installing structural steel supports as shown in the details and as specified herein. Price shall include all equipment, tools, labor, and incidental materials incidental thereto.

Threaded rod hangers, nuts and washers, conduits, and conduit support assemblies shall be supplied and installed under the respective Section 910 utility pay items and special provisions. Threaded rod hangers, nuts and washers, pipe, pipe rollers, pipe insulation, and pipe shields shall be supplied and installed under the respective Portland Water District and Unitil pay items and special provisions. Conduit and conduit hangers for the street lighting shall be supplied and installed under the respective Section 634 pay items and special provisions.

Payment will be made under:

Pay Item		**Pay Unit**
845.10	Structural Steel Utility Support	Lump Sum

Westbrook
Bridge Street Bridge
WIN: 019282.00
October 11, 2013

SPECIAL PROVISION
SECTION 910
SPECIAL WORK
(Bus Shelter Concrete Pad)

Description This work shall consist of supplying all necessary equipment, labor and materials necessary to install a new concrete bus shelter foundation as shown on the Plans. Contractor shall be responsible for coordinating and installing the necessary electrical conduit for the new foundation.

Materials

Concrete Shall meet the requirements of Section 502 – Structural Concrete, Class A.

Reinforcing Steel Shall meet the requirements of Section 503 – Reinforcing Steel, Plain Reinforcing Steel. See plans for size and spacing requirements.

Subbase Shall meet the requirements of Section 304 – Bases, Aggregate Subbase Course – Gravel.

Conduit Shall meet the material requirements of Section 715.03 – Non-Metallic Conduit.

Method of Measurement Bus Shelter Concrete Pad shall be paid for Lump Sum.

Construction Requirements The removal and storage of the existing bus shelter shall be supplied by Metro, as well as the materials, labor, and installation and anchorage of the new bus shelter. The Contractor shall coordinate the installation of the proposed bus shelter with Metro, including electrical conduit requirements prior to placing concrete with the Metro representative below:

Tom Ridge, Assistant Transportation Manager/Safety Coordinator
Greater Portland Metro Bus
114 Valley Street
Portland, ME 04102
(207) 774-0351

Electric work will be performed by others. The Contractor shall coordinate with the City of Westbrook's Public Works Department for the electrical work.

Basis of Payment The accepted quantity of Bus Shelter Concrete Pad will be paid for at the contract unit price per lump sum, complete and accepted in place. The unit price shall

be full compensation for all equipment, labor, and materials necessary to complete the work including but not limited to furnishing and placing rebar, placing and finishing concrete, furnishing and installing electrical conduit in the concrete slab, and resetting the adjacent existing granite curbing.

Payment will be made under:

Pay Item		Pay Unit
910.301	Bus Shelter Concrete Pad	Lump Sum

SPECIAL PROVISION
SECTION 910
REMOVE AND RESET PCMG WALL

Description This work shall consist of the following:

1. Removal, handling, transportation, and stacking (as necessary) of a portion of the existing precast concrete modular gravity (PCMG) wall in the Riverwalk removal area;
2. Removal and disposal of cast-in-place concrete backwall and PCMG wall footing along the section of PCMG wall to be removed;
3. Resetting of removed PCMG wall units as shown on the plans, with all required excavation, grading, and backfill as described herein;
4. Construction of a cast-in-place concrete backwall on top the reset PCMG wall;
5. Connection of the existing Riverwalk framing to the new concrete backwall.

The work shall be completed in accordance with these specifications and in reasonably close conformance with the lines and grades shown on the City plans, or as established by the Resident.

PCMG Wall Removal/Storage The work for this item shall include all labor and equipment necessary to remove, demolish, transport, stack, and/or store the existing PCMG wall segments as listed above. The work shall be subject to the following requirements:

1. Prior to commencing removal operations, the Contractor shall coordinate with the City of Westbrook and the Resident to determine suitable location(s) for the storage of removed materials intended for reuse. "Intended for reuse" means materials deemed by the City of Westbrook or the Resident as suitable for reuse on either the MDOT project, the City project, or by the City for a future use. A "suitable" storage location is one that shall not interfere with construction of the project, shall be secure from theft and vandalism, and shall not pose an attractive nuisance to the public. The location may vary depending on when during the course of the project the materials will be reused. Suitable locations may include, but are not limited to, a location at the Project Site, at the Contractor's staging area, at a Contractor owned facility, or at an off-site location suitable for legal storage of materials by the Contractor. Storage location(s) must be approved by the Resident.

2. Material not intended, or deemed unsuitable, for reuse shall be disposed of as part of the work for this item, and may include demolished cast-in-place concrete or other incidental materials deemed unacceptable for reuse that are generated by removal operations.

3. The cast-in-place concrete backwall and footings within the limits of PCMG wall removal shall be demolished and removed. Special care shall be taken to neatly

sawcut the existing backwall and footings at the limits of removal to ensure clean, square, and uniform surfaces at the removal joints. All existing horizontal reinforcement in the backwall and footings at the removal joint shall also be sawcut. There is a single #6 dowel in the stem of each PCMG wall segment that extends into the backwall; care shall be taken to retain and protect these dowels during backwall removal. Any dowels damaged during construction shall be repaired or replaced as part of this item. Unbolt and remove existing framing connection plates, ledger strips, and/or sill plates as needed to accomplish backwall removal.

4. The existing PCMG wall shall be removed as indicated on the plans. Care shall be taken during removal to prevent damage to the wall segments as they are to be reused as noted below. The Contractor is responsible for handling, lifting, transporting, and storing the wall segments in accordance with the wall manufacturer's recommendations (or industry standard practice if recommendations are not available). Some PCMG wall segments will be reused on the project; however, it is anticipated that there will be a surplus of PCMG segments removed and not needed on the project. Segments required for reuse on the project shall be stored (stacked) in a neat and orderly manner in a suitable location as previously described; segments not required for reuse shall be shall remain property of the City of Westbrook, unless otherwise noted or directed by the City or Resident. These materials shall be delivered to and neatly unloaded/stacked at the City of Westbrook's Public Services Department (PSD) Facility located at 371 Saco Street, Westbrook, ME.

5. Any materials that are suitable for reuse prior to the start of construction, but are damaged by the Contractor as a result of demolition, removal, or construction activities, shall be replaced with identical new and undamaged materials with no additional compensation to the Contractor or cost to the project.

Materials Materials shall meet the requirements of the following subsections of Division 700 - Materials:

Gravel Borrow	703.20
Preformed Expansion Joint Material	705.01
Reinforcing Steel	709.01
Structural Precast Concrete Units	712.061
Drainage Geotextile	722.02

The Contractor is cautioned that all of the materials listed are not required for every Prefabricated Concrete Modular Gravity Wall. The Contractor shall furnish the Resident a Certificate of Compliance certifying that the applicable materials comply with this section of the specifications. Certificates of Compliance will not be required for salvaged PCMG units intended for reuse. Materials shall meet the following additional requirements, except for PCMG units salvaged from the site and being reset under this item:

Concrete Units:

Tolerances In addition to meeting the requirements of 712.061, all prefabricated units shall be manufactured with the following tolerances. All units not meeting the listed tolerances will be rejected.

1. All dimensions shall be within (edge to edge of concrete) ±3/16 in.
2. Squareness. The length differences between the two diagonals shall not exceed 5/16 in.
3. Surface Tolerances. For steel formed surfaces, and other formed surface, any surface defects in excess of 0.08 in. in 4 ft will be rejected. For textured surfaces, any surface defects in excess of 5/16 in. in 5 ft shall be rejected.

Joint Filler (where applicable) Joints shall be filled with material approved by the Resident and supplied by an approved Prefabricated Concrete Modular Gravity Wall supplier. 4 in. wide, by 0.5 in. preformed expansion joint filler shall be placed in all horizontal joints between facing units. In all vertical joints, a space of 0.25 in. shall be provided. All Preformed Expansion Joint Material shall meet the requirements of subsection 502.03.

Woven Drainage Geotextile Woven drainage geotextile 12 in. wide shall be bonded with an approved adhesive compound to the back face, covering all joints between units, including joints abutting concrete structures. Geotextile seam laps shall be 6 in., minimum. The fabric shall be secured to the concrete with an adhesive satisfactory to the Resident. Dimensions may be modified with written approval of the Resident.

Concrete Shear Keys (where applicable) Shear keys shall have a thickness at least equal to the pre-cast concrete stem.

Concrete Leveling Pad Cast-in-place concrete shall be Class A concrete conforming to the requirements of Section 502 Structural Concrete. The horizontal tolerance on the surface of the pad shall be 0.25 in. in 10 ft. Dimensions may be modified with written approval of the Resident.

Backfill and Bedding Material Bedding and backfill material placed behind and within the reinforced concrete modules shall be gravel borrow conforming to the requirements of Subsection 703.20. The backfill materials shall conform to the following additional requirements: backfill and bedding material shall only contain particles that will pass the 3-inch square mesh sieve and the plasticity index (PI) as determined by AASHTO T90 shall not exceed 6. Compliance with the gradation and plasticity requirements shall be the responsibility of the Contractor, who shall furnish a copy of the backfill test results prior to construction.

The backfilling of the interior of the wall units and behind the wall shall progress simultaneously. The material shall be placed in layers not over 8 in. in depth, loose measure, and thoroughly compacted by mechanical or vibratory compactors. Puddling for compaction will not be allowed.

Materials Certificate Letter The Contractor, or the supplier as their agent, shall furnish the Resident a Materials Certificate Letter for the above materials, including the backfill material, in accordance with Section 700 of the Standard Specifications. A copy of all test results performed by the Contractor or their supplier necessary to assure contract compliance shall also be furnished to the Resident. Acceptance will be based upon the materials Certificate Letter, accompanying test reports, and visual inspection by the Resident.

Construction Requirements

Excavation The excavation and use as fill disposal of all excavated material shall meet the requirements of Section 203 -- Excavation and Embankment, except as modified herein.

Foundation The area upon which the modular gravity wall structure is to rest, and within the limits shown on the submitted plans, shall be graded for a width equal to, or exceeding, the length of the module. Prior to wall and leveling pad construction, this foundation material shall be compacted to at least 95 percent of maximum laboratory dry density, determined using AASHTO T180, Method C or D. Frozen soils and soils unsuitable or incapable of sustaining the required compaction, shall be removed and replaced.

A concrete leveling pad (footing) shall be constructed as indicated on the plans. The leveling pad shall be cast to the design elevations as shown on the plans, or as required to achieve the design top of wall elevations upon written approval of the Resident. Allowable elevation tolerances are +0.01 ft and -0.02 ft from the design elevations. Leveling pads which do not meet this requirement shall be repaired or replaced as directed by the Resident at no additional cost to the Department. Placement of wall units may begin after 24 hours curing time of the concrete leveling pad.

Method and Equipment Prior to erection of the Prefabricated Concrete Modular Gravity Wall, the Contractor shall furnish the Resident with detailed information concerning the proposed construction method and equipment to be used. The erection procedure shall be in accordance with industry standard practice for precast walls of the type being used. Any pre-cast units that are damaged due to handling will be replaced at the Contractor's expense.

Installation of Wall Units Vertical and horizontal joint fillers shall be installed as shown on the plans.

The maximum offset in any unit joint shall be 3/4 in. The overall vertical tolerance of the wall, plumb from top to bottom, shall not exceed 1/2 in per 10 ft of wall height. The prefabricated wall units shall be installed to a tolerance of plus or minus 3/4 inch in 10 ft in vertical alignment and horizontal alignment.

Cast-in-place Concrete Backwall A concrete backwall shall be constructed on top of the precast units as detailed in the design drawings. Concrete shall be Class A. All work for the backwall shall conform to the requirements of Section 502 Structural Concrete and Section 503 Reinforcing Steel of the Standard Specifications. The work for this item shall also include provisions for connecting the concrete backwall to and supporting the Riverwalk framing as detailed in the drawings.

Select Backfill Placement Backfill placement shall closely follow the erection of each row of prefabricated wall units. The Contractor shall decrease the lift thickness if necessary to obtain the specified density. The maximum lift thickness shall be 8 in. (loose). Gravel borrow backfill shall be compacted in accordance with Subsection 203.12 except that the minimum required compaction shall be 92 percent of maximum density as determined by AASHTO T180 Method C or D. Backfill compaction shall be accomplished without disturbance or displacement of the wall units. Sheepsfoot rollers will not be allowed. Whenever a compaction test fails, no additional backfill shall be placed over the area until the lift is recompacted and a passing test achieved.

The moisture content of the backfill material prior to and during compaction shall be uniform throughout each layer. Backfill material shall have a placement moisture content less than or equal to the optimum moisture content. Backfill material placed with a moisture content in excess of the optimum moisture content shall be removed and reworked until the moisture content is uniform and acceptable throughout the entire lift. The optimum moisture content shall be determined in accordance with AASHTO T180, Method C or D. At the end of the day's operations, the Contractor shall shape the last level of backfill so as to direct runoff of rain water away from the wall face.

Method of Measurement Remove and Reset PCMG Wall shall be measured by the lump sum.

Basis of Payment Remove and Reset PCMG Wall shall be paid for at the contract price by the lump sum. Payment shall be full compensation for furnishing all labor, equipment and materials including excavation; existing precast wall removal, handling, transportation, and stacking; existing cast-in-place backwall and footing removal and disposal; foundation material; backfill material; pre-cast concrete units hardware; joint fillers; and woven drainage geotextile. Cost of materials and labor for cast-in-place concrete leveling pad and backwall will not be paid for separately, but will be considered incidental to the Remove and Reset PCMG Wall work. The work shall also include all materials, hardware, and labor required to connect the existing Riverwalk framing to the new cast-in-place concrete backwall as detailed on the City project drawings.

There will be no allowance for excavating and backfilling for the Prefabricated Concrete Modular Gravity Wall beyond the limits shown on the approved submitted plans, except for excavation required to remove unsuitable subsoil in preparation for the foundation, as approved by the Resident. Payment for excavating unsuitable material shall be full

compensation for all costs of pumping, drainage, sheeting, bracing and incidentals for proper execution of the work

Payment will be made under:

Pay Item		Pay Unit
910.301	Remove and Reset PCMG Wall	LS

SPECIAL PROVISION
SECTION 910
RIVERWALK REMOVED AND STACKED

Description This work shall consist of the following:

1. Removal and storage of cast iron bench on the removed section of riverwalk;
2. Removal and storage/stacking of ornamental pedestrian railing on the removed section of riverwalk;
3. Removal and storage/stacking of steel and timber framing comprising the removed section of riverwalk;
4. Removal, handling, and disposal of pressure treated sill boards and decking on the removed section of riverwalk;
5. Removal and disposal of existing timber piles supporting the removed section of riverwalk;

The work for this item shall include all labor and equipment necessary to remove, deconstruct, demolish, transport, stack, and/or store the existing infrastructure and materials as listed above. Some of the items to be removed are intended for reuse on the project and should be handled accordingly.

The work shall be subject to the following requirements:

1. Prior to commencing removal operations, the Contractor shall coordinate with the City of Westbrook and the Resident to determine suitable location(s) for the storage of removed materials intended for reuse. "Intended for reuse" means materials deemed by the City of Westbrook or the Resident as suitable for reuse on either the MaineDOT project, the City project, or by the City for a future use. A "suitable" storage location is one that shall not interfere with construction of the project, shall be secure from theft and vandalism, and shall not pose an attractive nuisance to the public. The location may vary depending on when during the course of the project the materials will be reused. Suitable locations may include, but are not limited to, a location at the Project Site, at the Contractor's staging area, at a Contractor owned facility, or at an off-site location suitable for legal storage of materials by the Contractor. Storage location(s) must be approved by the Resident.

2. Material not intended, or deemed unsuitable, for reuse shall be disposed of as part of the work for this item, and may include demolished cast-in-place concrete; removed timber pile; fasteners or connections damaged due to removal operations; or other incidental materials deemed unacceptable for reuse that are generated by removal operations.

3. Material suitable for reuse, but not intended for reuse on the MaineDOT or City project, shall remain property of the City of Westbrook, unless otherwise noted or

directed by the City or Resident. These materials shall be delivered to and neatly unloaded/stacked at the City of Westbrook's Public Services Department (PSD) Facility located at 371 Saco Street, Westbrook, ME.

4. The cast iron bench on the section of riverwalk to be removed shall be removed prior to disassembly of the riverwalk structure. The bench shall be stored at a secure location until required for reuse on the City project.

5. The ornamental railing along the section of riverwalk to be removed shall be disconnected from the riverwalk and disassembled (as necessary for transport and storage) prior to removal of the riverwalk. The railing panels, posts, and connection hardware shall be stacked/stored neatly in a suitable location for future reuse on the City project. Softwood lumber spacers (dunnage) shall be used between each post and/or railing panel to prevent damage during transport, stacking, and storage. Refer to Special Provision Section 507 – Ornamental Pedestrian Railing for further information on handling and treatment of railing to be reused.

6. Riverwalk framing materials (steel and timber members and associated connections and appurtenances) shall be removed to the limits indicated on the plans and stacked neatly in a suitable location in a manner that will prevent distortion of the members (such as warping or bending). The condition of materials shall be evaluated at the time of removal; materials deemed unsuitable for reuse shall not be stored and shall become property of the Contractor and removed from the site. The Resident shall make the final determination on the acceptability of existing materials for reuse.

    a. Spacers shall be placed between rows of stacked lumber to provide air circulation. Provide for air circulation around stacks and under coverings. Timber must be sound and free from any decay; materials which are unsound, warped, bowed, twisted, rotten, or otherwise deemed unsuitable for reuse shall become property of the Contractor and removed from the site.

    b. All handling of timber shall be conducted so that the timber is kept clean and free from injury. Timber shall be so handled that there is no breaking of outer fibers or penetrating of the surface with tools. No material shall be dropped, thrown or dragged on the ground.

    c. Structural metal members that are stored for reuse shall be above ground on platforms, skids, or other supports and shall be protected from corrosion.

7. The existing timber pile supporting the removed portion of riverwalk shall also be removed. The pile shall be cut-off at a depth below grade to ensure that the remaining below-ground portion of pile does not interfere with construction of any

of the proposed improvements. The removed portion of the timber pile shall become property of the Contractor.

8. Any materials that are suitable for reuse prior to the start of construction, but are damaged by the Contractor as a result of demolition, removal, or construction activities, shall be replaced with identical new and undamaged materials with no additional compensation to the Contractor or cost to the project.

Method of Measurement Riverwalk Removed and Stacked shall be measured by the lump sum.

Basis of Payment Riverwalk Removed and Stacked shall be paid for by the Lump Sum. Payment shall be full compensation for all labor and equipment necessary to remove, deconstruct, demolish, handle, transport, stack, dispose of, and/or store the existing materials as described above.

Payment will be made under:

Pay Item		Pay Unit
910.301	Riverwalk Removed and Stacked	LS

SPECIAL PROVISION
SECTION 910
RIVERWALK EXPANSION AND REDECKING

Description This work shall consist of the following:

1. Removal and storage/stacking of ornamental pedestrian railing on the section of riverwalk to be expanded;
2. Removal, handling, and disposal of pressure treated sill boards and decking on existing riverwalk;
3. Relocation of the park bench on existing riverwalk to the expansion area;
4. All materials and work required for construction of the riverwalk expansion, exclusive of removal and reinstallation of precast concrete modular gravity wall, concrete backwall construction, and timber pile installation;
5. All materials and work required for installing new tropical hardwood decking on the specified portion of the existing riverwalk;
6. All materials and work required for installation of ornamental pedestrian railing along the full length of the riverwalk expansion;

The work for this item shall conform to the requirements of Section 504 – Structural Steel, as well as the additional requirements of this specification.

Materials Materials shall meet all requirements of the applicable subsections of Division 700 – Materials, and the following requirements:

Wood Products: DOC PS 20 and applicable rules of lumber grading agencies certified by the American Lumber Standards Committee Board of Review.

1. All timber shall be graded, approved, and factory stamped or tagged by a lumber grader. Each piece of lumber shall bear the grade stamp of the grading agency.

2. Provide lumber of the species mixed southern pine, as classified and by and meeting the requirements of the Southern Pine Inspection Board (SPIB). Lumber shall be any of the following grades:
   a. Select structural
   b. No. 1
   c. No. 2

3. Where nominal sizes are indicated, provide actual sizes required by DOC PS 20 for moisture content specified. Where actual sizes are indicated, they are minimum dressed sized for dry lumber.

4. Provide dressed lumber, S4S, unless otherwise indicated.

5. Provide kiln-dry treated lumber with 19 percent maximum moisture content at time of dressing for 2-inch nominal thickness or less, unless otherwise indicated. Kiln-dry after treatment. Do not use material that is warped or does not comply with requirements for untreated material.

6. New lumber framing products used shall be treated in accordance with AWPA Standard U1 to the requirements of Use Category 3B (UC3B), and in accordance with AASHTO M-133, *Standard Specification for Preservatives and Pressure Treatment Process for Timber*.
    a. Preservative chemicals shall be Alkaline copper quaternary (ACQ), or substitute of equivalent anticipated performance that is acceptable to authorities having jurisdiction.
    b. For exposed items indicated to receive a stained or natural finish, use chemical formulations that do not require incising, contain colorants, bleed through, or otherwise adversely affect finishes.

7. Timber/lumber materials salvaged from the existing elevated riverwalk and intended for reuse on the riverwalk expansion shall be sound and free from any decay. Materials which are unsound, warped, bowed, twisted, improperly treated, not adequately seasoned, or dimensionally inappropriate shall not be used. The Resident shall make the final determination on the acceptability of existing materials for reuse.

8. Riverwalk framing materials shall be treated for exterior use. Parallel Strand Lumber (PSL) shall be equivalent to wolmanized parallam by Trus Joist MacMillan.

9. Fasteners for wood materials shall be provided of size and type indicated and shall comply with requirements specified herein for material and manufacture. Where work is exposed to weather, in ground contact, in area of high relative humidity, or as noted on the plans, provide galvanized fasteners complying with AASHTO M 111M/M 111 or AASHTO M232M/M 232, whichever is applicable. Fasteners shall comply with the following reference standards:
    a. Nails, Brads, and Staples: ASTM F 1667
    b. Wood Screws: ASME B18.6.1
    c. Lag Bolts: ASME B18.2.1 (ASME B18.2.3.8M)
    d. Bolts: ASTM A 307, Grade A (ASTM F 568M, Property Class 4.6)
    e. Hex Nuts and Flat Washers: ASTM A 563 (ASTM A 563M)

10. Anchor bolt and sleeve assembly of material indicated below with capability to sustain, without failure, a load equal to 6 times the load imposed when installed in unit masonry assemblies and equal to 4 times the load imposed when installed in concrete as determined by testing per ASTM E 488 conducted by a qualified independent testing and inspecting agency.

a. Material: Carbon-steel components, zinc plated to comply with ASTM B 633, Class Fe/Zn 5.

11. Composite lumber to be used for sill boards shall be comprised of reclaimed wood and plastic with integral coloring; free from toxic chemicals and preservatives. Boards shall be sized to match the height and width of the existing sills and shall be provided in the maximum practical lengths to minimize end joints in sill boards. Composite boards shall meet the following material property requirements:

    a. Abrasion resistance: 0.01 inch wear per 1000 revolutions, tested to ASTM D2394.
    b. Hardness: 1124 pounds, tested to ASTM D143.
    c. Self ignition temperature: 743 degrees F, tested to ASTM D1929.
    d. Flash ignition temperature: 698 degrees F, tested to ASTM D1929.
    e. Flame spread rating: 80, tested to ASTM E84.
    f. Water absorption, 24 hour immersion, tested to ASTM D1037:
        i. Sanded surface: 4.3 percent.
        ii. Unsanded surface: 1.7 percent.
    g. Thermal expansion coefficient, 36 inch long samples:
        i. Width: 35.2 x 10-6 to 42.7 x 10-6.
        ii. Length: 16.1 x 10-6 to 19.2 x 10-6.
    h. Fastener withdrawal, tested to ASTM D1761:
        i. Nail: 163 pounds per inch.
        ii. Screw: 558 pounds per inch.
    i. Static coefficient of friction:
        i. Dry: 0.53 to 0.55, tested to ASTM D2047.
        ii. Dry: 0.59 to 0.70, tested to ASTM F1679.
        iii. Wet: 0.70 to 0.75, tested to ASTM F1679.
    j. Fungus resistance, white and brown rot: No decay, tested to ASTM D1413.
    k. Termite resistance: 9.6 rating, tested to AWPA E-1.
    l. Specific gravity: 0.91 to 0.95, tested to ASTM D2395.
    m. Compression:
        i. Parallel: 1806 PSI ultimate, 550 PSI design, tested to ASTM D198.
        ii. Perpendicular: 1944 PSI ultimate, 625 PSI design, tested to ASTM D143.
    n. Tensile strength: 854 PSI ultimate, 250 PSI design, tested to ASTM D198.
    o. Shear strength: 561 PSI ultimate, 200 PSI design, tested to ASTM D143.
    p. Modulus of rupture: 1423 PSI ultimate, 250 PSI design, tested to ASTM D4761.
    q. Modulus of elasticity: 175,000 PSI ultimate, 100,000 PSI design, tested to ASTM D4761.
    r. Thermal conductivity: 1.57 BTU per inch per hour per square foot at 85 degrees F, tested to ASTM C177.

12. Composite lumber shall be furnished with a manufacturer's 10-year warranty providing coverage against checking, splitting, splintering, rotting, structural damage from termites, and fungal decay of composite wood.

13. Tropical hardwood timber decking shall be full thickness, 2"x6" (nominal dimension) planks unless approved otherwise. Wood decking shall be naturally durable tropical hardwood (ipe or approved equal). All planks shall be partially air dried to a moisture content of 15% to 20%, and shall be supplied S4S (surfaced four sides), E4E (eased four edges), with the edges eased to a radius of 1/8". Measured at 30% moisture content, the width and thickness shall not vary from specified dimensions by more than ± 0.04 inches. All planks shall be supplied with the ends sealed with an aqueous wax log sealer.

14. All tropical hardwood timber decking planks shall be graded as FEQ-CAH (First Export Quality -Clear All Heart) grading rules, defined as follows:

    a. Lumber shall be graded both faces and both edges.
    b. Lumber shall be straight grained, maximum slope of grain to be 1:10.
    c. Lumber shall be parallel cut without heart centers or sap wood.
    d. Lumber shall be in sound condition, free from worm holes or knots.
    e. Allowable Imperfections are:
       <u>All faces:</u> Natural drying checks; discoloration caused by weathering or chemical reaction; bow or spring which can be removed using normal installation methods and tools.
    f. Imperfections Not Allowed:
       Longitudinal heart cracks; internal cracks; firm or soft sap wood; splits; end splits; ring shades; fungi effects (blue to gray, brown to red, white to yellow, or incipient decay); deformation (twisting or cupping) which cannot be removed using normal installation methods and tools.

15. All tropical hardwood timber decking planks shall meet or exceed the following mechanical properties (based on the 2" standard) as defined by the U.S. Forest Products Laboratory publications and testing data:

    a. Modulus of Rupture: 22,360 psi (at 12% moisture content)
    b. Modulus of Elasticity: 3,140,000 psi (at 12% moisture content)
    c. Max. Crush Strength: 13,010 psi (at 12% moisture content)
    d. Janka Side Hardness: 3,680 lbs (at 12% moisture content)
    e. Av. Air-Dry Density: 66 – 75 pcf
    f. Basic Specific Gravity: 0.85 – 0.97

16. All tropical hardwood timber planks shall be naturally fire resistant without the use of any fire resistant preservatives to meet NFPA Class A and UBC Class I.

17. Tropical hardwood timber planks shall be supplied that meet or exceed the Static Coefficient of Friction for both Neolite and leather shoes in accordance with ASTM Test Method C1028-89.

FORCE IN POUNDS

SHOE MATERIAL	DRY	WET
Neolite	0.73	0.69
Leather	0.55	0.79

Metal Framing Anchors: Provide framing anchors made from metal indicated, of structural capacity, type, and size indicated, and as follows:

1. Research/Evaluation Reports: Provide products acceptable to authorities having jurisdiction and for which model code research/evaluation reports exist that show compliance of metal framing anchors, for application indicated, with building code in effect for Project.

2. Allowable Design Loads: Provide products with allowable design loads, as published by manufacturer, which meet or exceed those indicated. Manufacturer's published values shall be determined from empirical data or by rational engineering analysis and demonstrated by comprehensive testing performed by a qualified independent testing agency.

3. Galvanized Steel Sheet: Hot-dip, zinc-coated steel sheet complying with ASTM A 653/A 653 M, G60 (Z180) designation.

4. Joist Hangers: U-shaped joist hangers with 2-inch- long seat and 1-1/4-inch wide nailing flanges at least 85 percent of joist depth.

Structural Metal

1. Structural metal shall conform to the requirements of ASTM A992 Grade 50 with the exception of angles, plates, and bars which shall conform to ASTM A-36.

2. Standard threaded fasteners: Standard bolts and nuts shall conform to ASTM A325. Size shall be ¾" unless noted otherwise.

3. Anchor bolts shall conform to ASTM A36/A36M.

4. All welding rod shall be E70 Series.

5. All steel hardware shall be hot dipped galvanized in accordance with ASTM A123 or A153 as applicable.

Ornamental Pedestrian Railing

1. Ornamental Pedestrian Railing shall meet the requirements of Special Provision Section 507.

Specifications and Qualifications The following specifications and qualification requirements shall apply to the work under this section:

1. All design, fabrication and erection of structural metal shall be in accordance with the latest edition of the "AISC Specification for Structural Steel Buildings", including all published supplements.

2. All welding shall be in accordance with the "Structural Welding Code", AWS D1.1, latest edition. Welds shall be made only by welders, tackers and welding operators who have been previously qualified by tests as prescribed in AWS D1.1, latest edition, of the American Welding Society to perform the type of work required.

3. Bolting of structural joints shall be in accordance with "AISC Specification for Structural Joints Using ASTM A325 or A490 Bolts".

Steel Fabrication:

Shop connections shall be welded. All welds shall develop the full strength of the materials to be welded, unless otherwise indicated. All welded connections which will be exposed in the finished structure shall be welded in such a manner as to make the finished connection neat and smooth in appearance.

Field connections shall be bolted or welded.

Galvanizing: All steel shall be hot-dipped galvanized after fabrication. Galvanizing shall be in accordance with Section 506 – Shop Applied Protective Coating – Steel.

Submittals:

1. Shop Drawings: Submit for review erection and shop fabrication drawings in accordance with Section 105. Drawings shall show all shop and erection details, type of steel, weld material and name of shop paint. Drawings shall be reviewed for size and arrangement of principal and auxiliary members and strength of connections. Any errors in dimensions shown on the shop drawings shall be the responsibility of the Contractor.

2. Product Data: Submit product data for each type of process and factory-fabricated product. Indicate component materials and dimensions and include construction

and application details. Include data for wood-preservative treatment from chemical treatment manufacturer and certification by treating plant that treated materials comply with requirements. Indicate type of preservative used, net amount of preservative retained, and chemical treatment manufacturer's written instructions for handling, storing, installing, and finishing treated material. Include copies of warranties from chemical treatment manufacturers for each type of treatment.

Storage and Handling

1. All handling of timber shall be conducted so that the timber is kept clean and free from injury. Timber shall be so handled that there is no breaking of outer fibers or penetrating of the surface with tools. No material shall be dropped, thrown or dragged on the ground.

2. Structural metal members and ornamental railing that are stored at the project site shall be above ground on platforms, skids or other supports and shall be protected from corrosion.

3. Packaged materials shall be stored in their original unbroken package or container.

Construction Requirements:

1. Timber Framing
    a. Comply with AFPA's "Details for Conventional Wood Frame Construction", unless otherwise indicated.
    b. Set rough carpentry to required levels and lines, with members plumb, true to line, cut, and fitted. Fit rough carpentry to other construction; scribe and cope as needed for accurate fit. Locate nailers, blocking, and similar supports to comply with requirements for attaching other construction and as indicated on the drawings.
    c. Do not use materials with defects that impair quality of rough carpentry or pieces that are too small to use with minimum number of joints or optimum joint arrangement.
    d. Securely attach rough carpentry work to substrate by anchoring and fastening as indicated, complying with the following:
        i. CABO NER-271 for power-driven fasteners
        ii. Published requirements of metal framing anchor manufacturer
        iii. Table 2305.2, "Fastening Schedule", in the BOCA National Building Code.
    e. Use common wire nails, unless otherwise indicated. Select fasteners of size that will not fully penetrate members where opposite side will be exposed to view or will receive finish materials. Make tight connections between members. Install fasteners without splitting wood; predrill as required.
    f. Use finishing nails for exposed work, unless otherwise indicated. Countersink nail heads and fill holes with wood filler.
    g. Do not splice structural members between supports.

h. Where built-up beam or girders of 2-inch nominal dimension lumber on edge are required, fasten together with 2 rows of 20d nails spaced not more than 32 inches o.c. Locate one row near top edge and other near bottom edge.
    i. For continuous members, locate end joints over supports.
i. Install joists with crown edge up and support ends of each member with not less than 1-1/2 inches of bearing on wood or metal, or 3 inches on masonry. Attach joists as follows:
    i. Where supported on wood members, by toe nailing or by using metal framing anchors, if indicated on plans.
    ii. Where framed into wood supporting members, by using wood ledgers as indicated or, if not indicated, by using metal joist hangers.
j. Do not notch joists or bore holes through joists other than as required for predrilling for fastener attachment.
k. Provide solid blocking of 2-inch nominal thickness by depth of joist at ends of joist unless nailed to header or band.
l. Lap members framing from opposite sides of beams, girders, or partitions not less than 4 inches or securely tie opposing members together. Provide solid blocking of 2-inch nominal thickness by depth of joist over supports.
m. Provide solid blocking of 2-inch nominal thickness by depth of joist between joists at intervals of not more than 96 inches o.c.

2. Structural Steel
    a. The structural steel shall be erected plumb and true to the lines and elevations indicated on the drawings. Erection tolerances shall be within the limits specified in Section 7.11 of the “AISC Code of Standard Practice”.
    b. Temporary connections shall be adequate to take care of all dead load and erection-imposed stresses. Temporary bracing shall be provided, wherever necessary, to hold the steel in position until permanent bolting and welding has been completed.
    c. Remove weld slag from all welds to allow for visual inspection.

3. Hardwood Timber Decking
    a. Installation of hardwood decking shall be in accordance with recommendations provided by the manufacturer/provider. In the event of a conflict in installation methods, the recommendations of the manufacturer/provider shall take precedence over the information provided herein.
    b. Decking shall be installed perpendicular to support joists.
    c. The minimum length of decking planks shall be 5’-0”, with the maximum practical lengths of decking to be used. Decking joints shall be staggered in a random pattern. Adjacent planks shall not have joints on the same support joist.

d. At time of installation, planks are to be placed tight together with a maximum gap width of approximately 1/16".
e. Each decking plank shall be attached to each joist supporting it with a minimum of two fasteners per joist. Power actuated fasteners will not be allowed. Planks are to be drilled prior to installation of bolts and/or screws. All fasteners are to be stainless steel.
f. Decking planks shall be flat, true, and generally free of crowning or cupping. Planks shall be installed such that the natural crown (cup) of the plank, if distinguishable, is oriented in a concave manner (oriented so the crown sheds water off the plank). The Resident may reject planks with excessive crowning, and shall make the final determination on the acceptability of the planks for use on the project.

4. Composite Lumber Sill Boards
   a. Install composite wood in accordance with manufacturer's instructions.
   b. Cut, drill, and rout composite wood using carbide tipped blades.
   c. Pre-drill fastener holes located closer than 1 inch from edges.
   d. Cut ends square and true.
   e. Leave expansion spaces between abutting boards and between boards and adjacent construction. End gaps between boards shall be 1/8 inch at ambient temperatures of 60 degrees F and above and 3/16 inch at ambient temperatures below 60 degrees F.

5. Ornamental Pedestrian Railing
   a. Install in accordance with Special Provision Section 507.

Method of Measurement Riverwalk Expansion and Redecking shall be measured by the lump sum.

Basis of Payment Riverwalk Expansion shall be paid for by the Lump Sum. Payment shall be full compensation for all labor, equipment, and materials necessary to install new tropical hardwood decking on the designated area of the existing riverwalk and to construct the Riverwalk Expansion work as detailed on the plans. Work shall include removal and disposal of pressure treated timber decking on the existing riverwalk, steel framing, timber framing, connections, relocation of the existing bench, removal of ornamental railing along section to be expanded, installation of ornamental railing at limits of expansion (including new supplemental railing as necessary), and tropical hardwood timber decking on the expanded riverwalk.

Payment will be made under:

Pay Item		Pay Unit
910.301	Riverwalk Expansion and Redecking	LS

SPECIAL PROVISION
SECTION 910
RIVERWALK OVERLOOKS

Description This work shall consist of the following:

1. All materials and work required for construction of the riverwalk overlooks, exclusive of plaza slab construction and abutment and/or backwall modifications.

The work for this item shall conform to the requirements of Section 504 – Structural Steel, as well as the additional requirements of this specification.

Materials Materials shall meet all requirements of the applicable subsections of Division 700 – Materials, and the following requirements:

Wood Products: DOC PS 20 and applicable rules of lumber grading agencies certified by the American Lumber Standards Committee Board of Review.

1. All timber shall be graded, approved, and factory stamped or tagged by a lumber grader. Each piece of lumber shall bear the grade stamp of the grading agency.

2. Provide lumber of the species mixed southern pine, as classified and by and meeting the requirements of the Southern Pine Inspection Board (SPIB). Lumber shall be any of the following grades:
   a. Select structural
   b. No. 1
   c. No. 2

3. Where nominal sizes are indicated, provide actual sizes required by DOC PS 20 for moisture content specified. Where actual sizes are indicated, they are minimum dressed sized for dry lumber.

4. Provide dressed lumber, S4S, unless otherwise indicated.

5. Provide kiln-dry treated lumber with 19 percent maximum moisture content at time of dressing for 2-inch nominal thickness or less, unless otherwise indicated. Kiln-dry after treatment. Do not use material that is warped or does not comply with requirements for untreated material.

6. New lumber framing products used shall be treated in accordance with AWPA Standard U1 to the requirements of Use Category 3B (UC3B), and in accordance with AASHTO M-133, *Standard Specification for Preservatives and Pressure Treatment Process for Timber*.

a. Preservative chemicals shall be Alkaline copper quaternary (ACQ), or substitute of equivalent anticipated performance that is acceptable to authorities having jurisdiction.
b. For exposed items indicated to receive a stained or natural finish, use chemical formulations that do not require incising, contain colorants, bleed through, or otherwise adversely affect finishes.

7. Timber/lumber materials salvaged from the existing elevated riverwalk and intended for reuse on the riverwalk overlooks shall be sound and free from any decay. Materials which are unsound, warped, bowed, twisted, improperly treated, not adequately seasoned, or dimensionally inappropriate shall not be used. The Resident shall make the final determination on the acceptability of existing materials for reuse.

8. Riverwalk framing materials shall be treated for exterior use. Parallel Strand Lumber (PSL) shall be equivalent to wolmanized parallam by Trus Joist MacMillan.

9. Fasteners for wood materials shall be provided of size and type indicated and shall comply with requirements specified herein for material and manufacture. Where work is exposed to weather, in ground contact, in area of high relative humidity, or as noted on the plans, provide galvanized fasteners complying with AASHTO M 111M/M 111 or AASHTO M232M/M 232, whichever is applicable. Fasteners shall comply with the following reference standards:

   a. Nails, Brads, and Staples: ASTM F 1667
   b. Wood Screws: ASME B18.6.1
   c. Lag Bolts: ASME B18.2.1 (ASME B18.2.3.8M)
   d. Bolts: ASTM A 307, Grade A (ASTM F 568M, Property Class 4.6)
   e. Hex Nuts and Flat Washers: ASTM A 563 (ASTM A 563M)

10. Anchor bolt and sleeve assembly of material indicated below with capability to sustain, without failure, a load equal to 6 times the load imposed when installed in unit masonry assemblies and equal to 4 times the load imposed when installed in concrete as determined by testing per ASTM E 488 conducted by a qualified independent testing and inspecting agency.

    a. Material: Carbon-steel components, zinc plated to comply with ASTM B 633, Class Fe/Zn 5.

11. Tropical hardwood timber decking shall be full thickness, 2”x6” (nominal dimension) planks unless approved otherwise. Wood decking shall be naturally durable tropical hardwood (ipe or approved equal). All planks shall be partially air dried to a moisture content of 15% to 20%, and shall be supplied S4S (surfaced four

sides), E4E (eased four edges), with the edges eased to a radius of 1/8". Measured at 30% moisture content, the width and thickness shall not vary from specified dimensions by more than ± 0.04 inches. All planks shall be supplied with the ends sealed with an aqueous wax log sealer.

12. All tropical hardwood timber decking planks shall be graded as FEQ-CAH (First Export Quality -Clear All Heart) grading rules, defined as follows:

    a. Lumber shall be graded both faces and both edges.
    b. Lumber shall be straight grained, maximum slope of grain to be 1:10.
    c. Lumber shall be parallel cut without heart centers or sap wood.
    d. Lumber shall be in sound condition, free from worm holes or knots.
    e. Allowable Imperfections are:
       <u>All faces:</u> Natural drying checks; discoloration caused by weathering or chemical reaction; bow or spring which can be removed using normal installation methods and tools.
    f. Imperfections Not Allowed:
       Longitudinal heart cracks; internal cracks; firm or soft sap wood; splits; end splits; ring shades; fungi effects (blue to gray, brown to red, white to yellow, or incipient decay); deformation (twisting or cupping) which cannot be removed using normal installation methods and tools.

13. All tropical hardwood timber decking planks shall meet or exceed the following mechanical properties (based on the 2" standard) as defined by the U.S. Forest Products Laboratory publications and testing data:

    a. Modulus of Rupture: 22,360 psi (at 12% moisture content)
    b. Modulus of Elasticity: 3,140,000 psi (at 12% moisture content)
    c. Max. Crush Strength: 13,010 psi (at 12% moisture content)
    d. Janka Side Hardness: 3,680 lbs (at 12% moisture content)
    e. Av. Air-Dry Density: 66 – 75 pcf
    f. Basic Specific Gravity: 0.85 – 0.97

14. All tropical hardwood timber planks shall be naturally fire resistant without the use of any fire resistant preservatives to meet NFPA Class A and UBC Class I.

15. Tropical hardwood timber planks shall be supplied that meet or exceed the Static Coefficient of Friction for both Neolite and leather shoes in accordance with ASTM Test Method C1028-89.

FORCE IN POUNDS

SHOE MATERIAL	DRY	WET
Neolite	0.73	0.69
Leather	0.55	0.79

Metal Framing Anchors: Provide framing anchors made from metal indicated, of structural capacity, type, and size indicated, and as follows:

1. Research/Evaluation Reports: Provide products acceptable to authorities having jurisdiction and for which model code research/evaluation reports exist that show compliance of metal framing anchors, for application indicated, with building code in effect for Project.

2. Allowable Design Loads: Provide products with allowable design loads, as published by manufacturer, which meet or exceed those indicated. Manufacturer's published values shall be determined from empirical data or by rational engineering analysis and demonstrated by comprehensive testing performed by a qualified independent testing agency.

3. Galvanized Steel Sheet: Hot-dip, zinc-coated steel sheet complying with ASTM A 653/A 653 M, G60 (Z180) designation.

4. Joist Hangers: U-shaped joist hangers with 2-inch- long seat and 1-1/4-inch wide nailing flanges at least 85 percent of joist depth.

Structural Metal

1. Structural metal shall conform to the requirements of ASTM A992 Grade 50 with the exception of angles, plates, and bars which shall conform to ASTM A-36.

2. Standard threaded fasteners: Standard bolts and nuts shall conform to ASTM A325. Size shall be ¾" unless noted otherwise.

3. Anchor bolts shall conform to ASTM A36/A36M.

4. All welding rod shall be E70 Series.

5. All steel hardware shall be hot dipped galvanized in accordance with ASTM A123 or A153 as applicable.

Ornamental Pedestrian Railing

1. Ornamental Pedestrian Railing shall meet the requirements of Special Provision Section 507.

Specifications and Qualifications The following specifications and qualification requirements shall apply to the work under this section:

1. All design, fabrication and erection of structural metal shall be in accordance with the latest edition of the "AISC Specification for Structural Steel Buildings", including all published supplements.

2. All welding shall be in accordance with the "Structural Welding Code", AWS D1.1, latest edition. Welds shall be made only by welders, tackers and welding operators who have been previously qualified by tests as prescribed in AWS D1.1, latest edition, of the American Welding Society to perform the type of work required.

3. Bolting of structural joints shall be in accordance with "AISC Specification for Structural Joints Using ASTM A325 or A490 Bolts".

Steel Fabrication:

Shop connections shall be welded. All welds shall develop the full strength of the materials to be welded, unless otherwise indicated. All welded connections which will be exposed in the finished structure shall be welded in such a manner as to make the finished connection neat and smooth in appearance.

Field connections shall be bolted or welded.

Galvanizing: All steel shall be hot-dipped galvanized after fabrication. Galvanizing shall be in accordance with Section 506 – Shop Applied Protective Coating – Steel.

Submittals:

1. Shop Drawings: Submit for review erection and shop fabrication drawings in accordance with Section 105. Drawings shall show all shop and erection details, type of steel, weld material and name of shop paint. Drawings shall be reviewed for size and arrangement of principal and auxiliary members and strength of connections. Any errors in dimensions shown on the shop drawings shall be the responsibility of the Contractor.

2. Product Data: Submit product data for each type of process and factory-fabricated product. Indicate component materials and dimensions and include construction and application details. Include data for wood-preservative treatment from chemical treatment manufacturer and certification by treating plant that treated materials comply with requirements. Indicate type of preservative used, net amount of preservative retained, and chemical treatment manufacturer's written instructions for handling, storing, installing, and finishing treated material. Include copies of warranties from chemical treatment manufacturers for each type of treatment.

Storage and Handling

1. All handling of timber shall be conducted so that the timber is kept clean and free from injury. Timber shall be so handled that there is no breaking of outer fibers or penetrating of the surface with tools. No material shall be dropped, thrown or dragged on the ground.

2. Structural metal members and ornamental railing that are stored at the project site shall be above ground on platforms, skids or other supports and shall be protected from corrosion.

3. Packaged materials shall be stored in their original unbroken package or container.

<u>Construction Requirements:</u>

1. Timber Framing
    a. Comply with AFPA's "Details for Conventional Wood Frame Construction", unless otherwise indicated.
    b. Set rough carpentry to required levels and lines, with members plumb, true to line, cut, and fitted. Fit rough carpentry to other construction; scribe and cope as needed for accurate fit. Locate nailers, blocking, and similar supports to comply with requirements for attaching other construction and as indicated on the drawings.
    c. Do not use materials with defects that impair quality of rough carpentry or pieces that are too small to use with minimum number of joints or optimum joint arrangement.
    d. Securely attach rough carpentry work to substrate by anchoring and fastening as indicated, complying with the following:
        i. CABO NER-271 for power-driven fasteners
        ii. Published requirements of metal framing anchor manufacturer
        iii. Table 2305.2, "Fastening Schedule", in the BOCA National Building Code.
    e. Use common wire nails, unless otherwise indicated. Select fasteners of size that will not fully penetrate members where opposite side will be exposed to view or will receive finish materials. Make tight connections between members. Install fasteners without splitting wood; predrill as required.
    f. Use finishing nails for exposed work, unless otherwise indicated. Countersink nail heads and fill holes with wood filler.
    g. Do not splice structural members between supports.
    h. Where built-up beam or girders of 2-inch nominal dimension lumber on edge are required, fasten together with 2 rows of 20d nails spaced not more than 32 inches o.c. Locate one row near top edge and other near bottom edge.
        i. For continuous members, locate end joints over supports.
    i. Install joists with crown edge up and support ends of each member with not less than 1-1/2 inches of bearing on wood or metal, or 3 inches on masonry. Attach joists as follows:

i. Where supported on wood members, by toe nailing or by using metal framing anchors, if indicated on plans.
ii. Where framed into wood supporting members, by using wood ledgers as indicated or, if not indicated, by using metal joist hangers.

j. Do not notch joists or bore holes through joists other than as required for predrilling for fastener attachment.
k. Provide solid blocking of 2-inch nominal thickness by depth of joist at ends of joist unless nailed to header or band.
l. Lap members framing from opposite sides of beams, girders, or partitions not less than 4 inches or securely tie opposing members together. Provide solid blocking of 2-inch nominal thickness by depth of joist over supports.
m. Provide solid blocking of 2-inch nominal thickness by depth of joist between joists at intervals of not more than 96 inches o.c.

2. Structural Steel
   a. The structural steel shall be erected plumb and true to the lines and elevations indicated on the drawings. Erection tolerances shall be within the limits specified in Section 7.11 of the "AISC Code of Standard Practice".
   b. Temporary connections shall be adequate to take care of all dead load and erection-imposed stresses. Temporary bracing shall be provided, wherever necessary, to hold the steel in position until permanent bolting and welding has been completed.
   c. Remove weld slag from all welds to allow for visual inspection.

3. Hardwood Timber Decking
   a. Installation of hardwood decking shall be in accordance with recommendations provided by the manufacturer/provider. In the event of a conflict in installation methods, the recommendations of the manufacturer/provider shall take precedence over the information provided herein.
   b. Decking shall be installed perpendicular to support joists.
   c. The minimum length of decking planks shall be 5'-0", with the maximum practical lengths of decking to be used. Decking joints shall be staggered in a random pattern. Adjacent planks shall not have joints on the same support joist.
   d. At time of installation, planks are to be placed tight together with a maximum gap width of approximately 1/16".
   e. Each decking plank shall be attached to each joist supporting it with a minimum of two fasteners per joist. Power actuated fasteners will not be allowed. Planks are to be drilled prior to installation of bolts and/or screws. All fasteners are to be stainless steel.
   f. Decking planks shall be flat, true, and generally free of crowning or cupping. Planks shall be installed such that the natural crown (cup) of the plank, if distinguishable, is oriented in a concave manner (oriented so the

crown sheds water off the plank). The Resident may reject planks with excessive crowning, and shall make the final determination on the acceptability of the planks for use on the project.

4. Ornamental Pedestrian Railing
    a. Install in accordance with Special Provision Section 507.

Method of Measurement Riverwalk Overlooks shall be measured by the lump sum.

Basis of Payment Riverwalk Overlooks shall be paid for by the Lump Sum. Payment shall be full compensation for all labor, equipment, and materials necessary to construct the Riverwalk Overlooks work as detailed on the plans. Work shall include steel framing, timber framing, connections, installation of ornamental railing around exposed perimeter of the structures, and tropical hardwood timber decking.

Payment will be made under:

Pay Item		Pay Unit
910.301	Riverwalk Overlooks	LS

SPECIAL PROVISION

SECTION 910
SPECIAL WORK

(Utility Conduit - Central Maine Power Co.)

Description This item shall consist of all work shown in the Plans, as referenced in Special Provision 104 – Central Maine Power Co. (CMP), and described in this special provision.

The Bridge work shall consist of furnishing and installing all materials and labor for the installation of nine (9) 5" Schedule 80 PVC conduit throughout the entire length of bridge (between the interior face of each abutment) including conduit, conduit support hangers with all of their components and incidentals related to these items necessary to complete the work. The utility owners' name shall be clearly labeled and visible at each end of the bridge on their respective conduit to differentiate it from conduits intended for other utility owners.

The Bridge approach work shall consist of furnishing and installing all materials and labor for the installation of nine (9) 5" schedule 80 PVC conduits sleeved in 6" galvanized steel pipe through the bridge abutment to 10 feet past both at-grade approach slabs and then encased in concrete (un-sleeved) to first underground vaults on both ends of the bridge. Afterwards, the conduits shall be 5" schedule 40 PVC encased in concrete to the tie-in points located on the Plans. Installation shall include all trenching and backfilling, sand bed, traffic rated electrical vaults with round cast iron frames and covers, crushed stone bases, bricks, mortar, covers, any gradual sweeps (36-inch minimum if necessary), pull rope, tracer wire, warning tape, and all associated hardware and incidentals related to these items necessary to complete the work. See attached vault and trench details. Vaults shall have concentric or eccentric manholes and covers as noted on the Plans.

CONSTRUCTION REQUIREMENTS

Materials The Contractor shall be responsible for the furnishing and fabrication of all material and associated hardware as shown in the Plans and described in this specification.

The materials furnished by the Contractor shall be new. All materials shall conform to NEMA or UL standards as applicable. Non-metallic conduit shall be rigid unplasticized polyvinylchloride (PVC) conduit, schedule 80 and 40 (depending on location), suitable for burial. The galvanized rigid conduit (GRC) used to sleeve the PVC conduit shall be rated for direct burial or in concrete per article 344 of NEC. Pull-lines shall be polypropylene rope of a minimum of ¼ inch diameter from the existing manhole on Main Street to the proposed vault in the north bridge approach.

The Contractor shall within 60 days following execution of the contract, submit a list of materials which are to be installed. The list shall include the manufacturer, size, and identifying number of each item. The list shall be supplemented by such data as may be required, including detailed scale drawings of proposed

minor deviations from the plans. The Contractor shall submit for review, design data and sample articles of the material proposed for use. All of the data shall be submitted in duplicate.

Workmanship shall conform to the requirements of: NEC, NESC, ASTM Standards, and the ANSI, the local Utility Companies, the State of Maine, Manufactures Specifications and any local ordinances that may apply except when otherwise noted on the Plans or in the Special Provisions.

Conduits shall be of the sizes noted on the Plans, which are indicated as the nominal inside diameter.

The Contractor shall be responsible for and shall repair all damage caused to underground drainage structures, utilities, or lighting conduit, which are encountered during construction.

Trenches for conduits shall be excavated to a width that will permit proper installation of the conduit and to the depth shown on the Plans or as directed. Minimum cover below the roadway shall be 36 inches (36”+) over the top of the concrete encasement. After the trench has been excavated as specified, the bottom of the trench shall be prepared with a sand bedding material. After placing the conduit and concrete encasement, sand shall be placed around the sides and over the top of the conduit. The entire trench shall be backfilled with an approved material, placed in layers not exceeding eight inches (8”), and thoroughly tamped. Concrete encasement shall have a minimum compressive strength of 2,900 psi with a maximum aggregate size of 1”.

All underground conduits shall be placed to at least the depth shown on the Plans and shall not interfere with poles, guardrail posts, approach rail anchor block, sign foundations or other objects. PVC conduit shall be made watertight by joining with solvent or in accordance with the manufacturer’s specifications. Conduits shall be bent carefully to avoid damage and without the use of an open flame. Bends sharper than 45 degrees will not be permitted. The total angle of all bends in one run and the radius of bends shall conform to the NEC requirements.

Conduits placed in the bridge superstructure shall be securely supported and fastened as shown on the Plans to maintain the conduits position. The support rods, intermediate rods, and all metallic hardware shall be hot dipped galvanized steel and shall meet or exceed requirements of ASTM A507 with ASTM 153 for galvanizing. Metal components that are custom fabricated shall have hot dipped galvanizing applied in accordance with ASTM A153 with a minimum coating of 2.0 oz./sq. ft. using high grade zinc conforming to ASTM B6-00 with less than .03% lead used in the process. Each vertical portion of the support hanger in contact with the conduit shall be sleeved with a FRP tube and all horizontal members such as flat bars or square tubing shall be constructed of FRP. FRP conduit and FRP support hangers shall be manufactured by Champion Fiberglass, Inc. or approved equal.

Expansion fittings in the superstructure shall be double “O”-ring type expansion couplings with a movement capacity as indicated on the Plans. To allow for expansion and contraction of PVC conduit during installation on long runs, one end shall be left unconnected or a double “O”-ring expansion coupling inserted near one end of the run until the final covering of the conduit is in progress.

Where PVC conduit runs are placed parallel to other conduits, they shall be separated by a minimum of 2" of sand or soil cushion. The bottom of trenches shall be lined with a 3" bedding material of tamped sand before laying the conduit. Backfill to a compacted depth of 6" above the top of the conduit shall be sand, free from rocks or hard lumps.

The Contractor shall install pull-lines in all conduits. The ends of the lines shall be secured in such manner as to prevent accidental withdrawal of the wire. All conduit ends shall be capped with watertight conduit caps.

The Contractor shall provide a metal tracer wire and a 2" wide "buried cable" plastic warning tape located 12" below grade at all underground conduits.

Method of Measurement
No measurement shall be made.

Basis of Payment: Payment for Special Work – Utility Conduit (Central Maine Power Co.) shall be full compensation for all materials, equipment, labor, and hardware necessary to install the utility conduits. Payment for work shall include furnishing and installing bridge utility support system including hanger brackets, spacers, and threaded anchor rods, furnishing and installing PVC conduits and pull-line for each conduit, steel sleeves, installation of utility vaults on each bridge approach, furnishing and installing the concrete encasement, the required excavation and backfill with granular borrow, and connections to existing manholes. The steel utility support channel embedded in the concrete bridge deck shall be supplied, installed, and paid for under a separate item.

Pay Item	Description	Pay Unit
910.301	Special Work – Utility Conduit (Central Maine Power Co.)	Lump Sum

Required Pre-Installation Meeting: Before beginning any utility installation work a utility meeting shall be held with all utilities, the MaineDOT Resident, and MaineDOT Utility Coordinator (Calvin Seeley).

SPECIAL PROVISION

SECTION 910
SPECIAL WORK

(Utility Conduit – FairPoint Communications– Approaches Only)

Description This item shall consist of all work shown in the Plans, as referenced in Special Provision 104 – FairPoint Communication – Approaches Only, and described in this special provision. This special provision is limited to the work from the tie-in points identified by FairPoint and shown on the Plans inward towards the bridge to ten (10) feet beyond the end of each at-grade approach slab. Work related to the bridge between these two points is addressed in a separate special provision that includes all telecommunication utilities (FairPoint and Time Warner Cable) within the bridge limits.

The Bridge approach work shall consist of furnishing and installing all materials and labor for the installation of six (6) 4-inch schedule 40 PVC telecommunication conduits, concrete encased duct, all trenching and backfilling, sand bed, traffic rated electrical manholes, crushed stone bases, bricks, mortar, any gradual sweeps (36-inch minimum if necessary), mule tape (rated for 5000 lbs.), tracer wire, warning tape, and all associated hardware and incidentals related to these items necessary to complete the work. The utility owners' name (FairPoint) shall be clearly labeled and visible at each terminus on their respective conduit to differentiate it from conduits intended for other utility owners. See attached trench details.

CONSTRUCTION REQUIREMENTS

Materials The Contractor shall be responsible for the furnishing and fabrication of all material and associated hardware as shown in the Plans and described in this specification.

The materials furnished by the Contractor shall be new. All materials shall conform to NEMA or UL standards as applicable. Non-metallic conduit shall be rigid un-plasticized polyvinylchloride PVC) as shown on the plans. The concrete communication duct used to protect the conduits beyond the terminus of the galvanized sleeves to the manholes shall be a Schedule "C" communications duct, concrete encased, and rodded. Mule tapes (required by FairPoint in lieu of pull strings) shall be rated for rated for 5000 lbs. and extend through the entire run of each conduit to north and south tie-in points as located on the Plans. The proposed manhole shall be a standard precast 12'x 6'x7'H equipped with racking and core drilled with six (6) holes for 4-inch conduit in each end to be sealed with grout. The manhole shall have an eccentric manhole and cover as noted on the Plans. FairPoint Inspector (Greg Green, tel. 650-0418) to be present while conduit and manhole work is in progress.

The Contractor shall within 60 days following execution of the contract, submit a list of materials which are to be installed. The list shall include the manufacturer, size, and identifying number of each item. The list shall be supplemented by such data as may be required, including detailed scale drawings of proposed minor deviations from the plans. The Contractor shall submit for review, design data and sample articles of the material proposed for use. All of the data shall be submitted in duplicate.

Workmanship shall conform to the requirements of: NEC, NESC, ASTM Standards, and the ANSI, the local Utility Companies, the State of Maine, Manufactures Specifications and any local ordinances that may apply except when otherwise noted on the Plans or in the Special Provisions.

Conduits shall be of the sizes noted on the Plans, which are indicated as the nominal inside diameter.

The Contractor shall be responsible for and shall repair all damage caused to underground drainage structures, utilities, or lighting conduit, which are encountered during construction.

Trenches for conduits shall be excavated to a width that will permit proper installation of the conduit and to the depth shown on the Plans or as directed. Minimum cover shall be 36 inches (36”+) over the top of the concrete encasement. Concrete encasement shall be as shown on the attached trench detail. After the trench has been excavated as specified, the bottom of the trench shall be prepared with a sand bedding material. After placing the conduit and concrete encasement, sand shall be placed around the sides and over the top of the encasement. The entire trench shall be backfilled with an approved material, placed in layers not exceeding six inches (6”), and thoroughly tamped.

All underground conduits shall be placed to at least the depth shown on the Plans and shall not interfere with poles, guardrail posts, approach rail anchor block, sign foundations or other objects. Conduits shall be made watertight by joining with solvent or in accordance with the manufacturer’s specifications. If necessary, PVC conduit shall be bent (36-inch minimum radius) carefully to avoid damage and without the use of an open flame. Bends sharper than 45 degrees will not be permitted. The total angle of all bends in one run and the radius of bends shall conform to the NEC requirements.

Where conduit runs are placed parallel to other conduits, they shall be separated by a minimum of 2” of sand or soil cushion. The bottom of trenches shall be lined with a 3” bedding material of tamped sand before laying the conduit. Backfill to a compacted depth of 6” above the top of the conduit shall be sand, free from rocks or hard lumps.

The Contractor shall install mule tape in all FairPoint conduits. The ends of the lines shall be secured in such manner as to prevent accidental withdrawal of the wire. All conduit ends shall be capped with watertight conduit caps.

The Contractor shall provide a metal tracer wire and a 2” wide “buried cable” plastic warning tape located 12” below grade at all underground conduits.

Method of Measurement
No measurement shall be made.

Basis of Payment: Payment for Special Work – Utility Conduit (FairPoint - Approaches Only) shall be full compensation for all materials, equipment, labor, and hardware necessary to install the utility conduits. Payment for work shall include furnishing and installing PVC conduits and pull-line (mule tape) for each conduit, installation of utility manhole in the south bridge approach, furnishing and installing the concrete encasement, the required excavation and backfill with granular borrow, and connections to existing manholes. The steel utility support channel embedded in the concrete bridge deck shall be supplied, installed, and paid for under a separate item.

Pay Item	**Description**	**Pay Unit**
910.301	Special Work – Utility Conduit (FairPoint - Approaches Only)	Lump Sum

Required Pre-Installation Meeting: Before beginning any utility installation work a utility meeting shall be held with all utilities, the MaineDOT Resident, and MaineDOT Utility Coordinator (Calvin Seeley).

SPECIAL PROVISION

SECTION 910
SPECIAL WORK

(Utility Conduit – FairPoint Communications and Time Warner Cable– Bridge Only)

Description This item shall consist of all work shown in the Plans, as referenced in Special Provision 104 – FairPoint Communications (FairPoint) and Time Warner Cable (TWC) – Bridge Only and described in this special provision. This special provision is limited to the work on the bridge and up to 10 feet beyond the end of each at-grade approach slab. Work related to the bridge approaches outside these limits is addressed in separate special provisions for each of the above utilities.

The Bridge work between each abutment shall consist of furnishing and installing all materials and labor for the installation of six (6) 4-inch IPS/XW Fiberglass telecommunication conduits (for FairPoint) and one (1) 4-inch Schedule 40 PVC plastic conduit (for TWC) throughout the entire length of bridge between abutments including conduit, expansion joints, conduit support hangers with all of their components and incidentals related to these items necessary to complete the work. The utility owners' name shall be clearly labeled and visible at each end of the bridge on their respective conduit to differentiate it from conduits intended for other utility owners.

The Bridge work extending through the concrete abutments to ten (10) feet beyond each approach slab shall consist of furnishing and installing all materials and labor for the installation of six (6) 4-inch IPS/XW fiberglass telecommunication conduits (for FairPoint) and one (1) 4-inch Schedule 40 PVC plastic conduit (for TWC) sleeved within seven (7) 5-inch galvanized rigid steel conduit sleeves. Installation shall include all trenching and backfilling, sand bed, pull string (5000 lb. mule tape for FairPoint), tracer wire, warning tape, and all associated hardware and incidentals related to these items necessary to complete the work. The utility owners' name shall be clearly labeled and visible at each terminus on their respective conduit to differentiate it from conduits intended for other utility owners.

CONSTRUCTION REQUIREMENTS

Materials The Contractor shall be responsible for the furnishing and fabrication of all material and associated hardware as shown in the Plans and described in this specification.

The materials furnished by the Contractor shall be new. All materials shall conform to NEMA or UL standards as applicable. Non-metallic conduit shall be rigid fiberglass reinforce plastic (FRP) for FairPoint and un-plasticized polyvinylchloride (PVC) for TWC as shown on the Plans. The galvanized rigid conduit (GRC) used to sleeve the conduits off the bridge shall be rated for direct burial or in concrete per Article 344 of NEC. Mule tape rated at 5000 pounds shall extend through the entire run of each FairPoint conduit to north and south tie-in points as located on the Plans. The TWC conduit(s) shall have a pull-line of polypropylene rope of a minimum of ¼ inch diameter extending through the entire run to north and south tie-in points as located on the Plans.

The Contractor shall within 60 days following execution of the contract, submit a list of materials which are to be installed. The list shall include the manufacturer, size, and identifying number of each item. The list shall be supplemented by such data as may be required, including detailed scale drawings of proposed minor deviations from the plans. The Contractor shall submit for review, design data and sample articles of the material proposed for use. All of the data shall be submitted in duplicate.

Workmanship shall conform to the requirements of: NEC, NESC, ASTM Standards, and the ANSI, the local Utility Companies, the State of Maine, Manufactures Specifications and any local ordinances that may apply except when otherwise noted on the Plans or in the Special Provisions.

Conduits shall be of the sizes noted on the Plans, which are indicated as the nominal inside diameter.

The Contractor shall be responsible for and shall repair all damage caused to underground drainage structures, utilities, or lighting conduit, which are encountered during construction.

Trenches for conduits shall be excavated to a width that will permit proper installation of the conduit and to the depth shown on the Plans or as directed. Minimum cover shall be 36 inches (36”+) over the TWC conduit or Fairpoint concrete encasement. Concrete encasement shall be a minimum of six inches (6”) thickness above and on the sides of buried non-metallic conduit. After the trench has been excavated as specified, the bottom of the trench shall be prepared with a sand bedding material. After placing the conduit and concrete encasement, sand shall be placed around the sides and over the top of the conduit. The entire trench shall be backfilled with an approved material, placed in layers not exceeding eight inches (8”), and thoroughly tamped.

All underground conduits shall be placed to at least the depth shown on the plans and shall not interfere with poles, guardrail posts, approach rail anchor block, sign foundations or other objects. Conduits shall be made watertight by joining with solvent or in accordance with the manufacturer’s specifications. If necessary, conduit may be bent (36-inch minimum radius) carefully to avoid damage and without the use of an open flame. Bends sharper than 45 degrees will not be permitted. The total angle of all bends in one run and the radius of bends shall conform to the NEC requirements.

Conduits placed in the bridge superstructure shall be securely supported and fastened as shown on the Plans to maintain the conduits position. The support rods, intermediate rods, and all metallic hardware shall be hot dipped galvanized steel and shall meet or exceed requirements of ASTM A507 with ASTM 153 for galvanizing. Metal components that are custom fabricated shall have hot dipped galvanizing applied in accordance with ASTM A153 with a minimum coating of 2.0 oz./sq. ft. using high grade zinc conforming to ASTM B6-00 with less than .03% lead used in the process. Each vertical portion of the support hanger in contact with the conduit shall be sleeved with a FRP tube and all horizontal members such as flat bars or square tubing shall be constructed of FRP. FRP conduit and FRP support hangers shall be manufactured by Champion Fiberglass, Inc. or approved equal.

Expansion fittings in the superstructure shall be double “O”-ring type expansion couplings with a movement capacity as indicated on the plans. During the installation of long runs of conduit, one end

shall be left unconnected or a double "O"-ring expansion coupling inserted near one end of the run until the final covering of the conduit is in progress to allow for expansion and contraction. FRP expansion is about 1/3rd that of PVC or comparable to stainless steel and should be accounted for in accordance with NEC 2011 Article 355.44.

Where conduit runs are placed parallel to other conduits, they shall be separated by a minimum of 2" of sand or soil cushion. The bottom of trenches shall be lined with a 3" bedding material of tamped sand before laying the conduit. Backfill to a compacted depth of 6" above the top of the conduit shall be sand, free from rocks or hard lumps.

The Contractor shall install pull-lines or mule tape as required by the utility in all conduits. The ends of the lines shall be secured in such manner as to prevent accidental withdrawal of the wire. All conduit ends shall be capped with watertight conduit caps.

The Contractor shall provide a metal tracer wire and a 2" wide "buried cable" plastic warning tape located 12" below grade at all underground conduits.

Method of Measurement

No measurement shall be made.

Basis of Payment: Payment for Special Work – Utility Conduit (FairPoint and Time Warner Cable - Bridge Only) shall be full compensation for all materials, equipment, labor, and hardware necessary to install the utility conduits. Payment for work shall include furnishing and installing bridge utility support system including brackets, spacers, and threaded anchor rods, furnishing and installing conduits (including pull-lines and conduit sleeves for each conduit) and sleeves, and the required excavation and backfill with granular borrow. The steel utility support channel embedded in the concrete bridge deck shall be supplied, installed, and paid for under a separate item.

Pay Item	Description	Pay Unit
910.301	Special Work – Utility Conduit (FairPoint and TWC - Bridge Only)	Lump Sum

Required Pre-Installation Meeting: Before beginning any utility installation work a utility meeting shall be held with all utilities, the MaineDOT Resident, and MaineDOT Utility Coordinator (Calvin Seeley).

SPECIAL PROVISION

SECTION 910
SPECIAL WORK

(Utility Conduit – Time Warner Cable (TWC) – Approaches Only)

Description This item shall consist of all work shown in the Plans, as referenced in Special Provision 104 – Time Warner Cable (TWC) – Approaches Only), and described in this special provision. This special provision is limited to the work from the tie-in points identified by TWC and shown on the plans inward towards the bridge to ten (10) feet beyond the end of each at-grade approach slab. Work related to the bridge between these two points is addressed in a separate special provision that includes all telecommunication utilities (FairPoint and Time Warner Cable) within the bridge limits.

The Bridge approach work shall consist of furnishing and installing all materials and labor for the installation of one (1) 4-inch schedule 40 PVC conduit, all trenching and backfilling, sand bed, traffic rated electrical vaults, crushed stone bases, bricks, mortar, any gradual sweeps (36-inch minimum if necessary), pull string, tracer wire, warning tape, and all associated hardware and incidentals related to these items necessary to complete the work. The utility owners' name (Time Warner Cable) shall be clearly labeled and visible at each terminus on their respective conduit to differentiate it from conduits intended for other utility owners.

CONSTRUCTION REQUIREMENTS

Materials The Contractor shall be responsible for the furnishing and fabrication of all material and associated hardware as shown in the Plans and described in this specification.

The materials furnished by the Contractor shall be new. All materials shall conform to NEMA or UL standards as applicable. Non-metallic conduit shall be un-plasticized Schedule 40 polyvinylchloride (PVC) plastic as shown on the plans. Pull line shall be polypropylene rope a minimum of ¼ inch diameter extending through the entire run to north and south tie-in points as located on the Plans. The proposed vault shall be standard precast electric manhole 3'x4'x5'H constructed of 4000 psi concrete (min.) and rated for H-20 traffic loading and core drilled with one (1) hole for 4-inch conduit in each end to be sealed with grout. The vault shall have a concentric manhole and cover as shown on the Plans. TWC shall be notified while conduit and manhole work is in progress in the event they would like to provide an inspector.

The Contractor shall within 60 days following execution of the contract, submit a list of materials which are to be installed. The list shall include the manufacturer, size, and identifying number of each item. The list shall be supplemented by such data as may be required, including detailed scale drawings of proposed minor deviations from the plans. The Contractor shall submit for review, design data and sample articles of the material proposed for use. All of the data shall be submitted in duplicate.

Workmanship shall conform to the requirements of: NEC, NESC, ASTM Standards, and the ANSI, the local Utility Companies, the State of Maine, Manufactures Specifications and any local ordinances that may apply except when otherwise noted on the Plans or in the Special Provisions.

Conduits shall be of the sizes noted on the Plans, which are indicated as the nominal inside diameter.

The Contractor shall be responsible for and shall repair all damage caused to underground drainage structures, utilities, or lighting conduit, which are encountered during construction.

Trenches for conduits shall be excavated to a width that will permit proper installation of the conduit to the depth shown on the Plans or as directed. After the trench has been excavated as specified, the bottom of the trench shall be prepared with a bedding sand material. Minimum cover shall be 36 inches over the top of the conduits. After placing the conduit, sand shall be placed around the sides. The entire trench shall be backfilled with an approved material, placed in layers not exceeding eight inches (8”), and thoroughly tamped.

All underground conduits shall be placed to at least the depth shown on the plans and shall not interfere with poles, guardrail posts, approach rail anchor block, sign foundations or other objects. Conduits shall be made watertight by joining with solvent or in accordance with the manufacturer’s specifications. If necessary, PVC conduit shall be bent (36-inch minimum radius) carefully to avoid damage and without the use of an open flame. Bends sharper than 45 degrees will not be permitted. The total angle of all bends in one run and the radius of bends shall conform to the NEC requirements.

Where conduit runs are placed parallel to other conduits, they shall be separated by a minimum of 2” of sand or soil cushion. The bottom of trenches shall be lined with a 3” bedding material of tamped sand before laying the conduit. Backfill to a compacted depth of 6” above the top of the conduit shall be sand, free from rocks or hard lumps.

The Contractor shall install pull-string in all TWC conduits. The ends of the lines shall be secured in such manner as to prevent accidental withdrawal of the wire. All conduit ends shall be capped with watertight conduit caps.

The Contractor shall provide a metal tracer wire and a 2” wide “buried cable” plastic warning tape located 12” below grade at all underground conduits.

Method of Measurement
No measurement shall be made.

Basis of Payment: Payment for Special Work – Utility Conduit (Time Warner Cable - Approaches Only) shall be full compensation for all materials, equipment, labor, and hardware necessary to install the utility conduits. Payment for work shall include furnishing and installing PVC conduits and pull-line for conduit, installation of utility vault in the south bridge approach, the required excavation and backfill with granular borrow, and connections to existing manholes and service connections. The steel utility support channel embedded in the concrete bridge deck shall be supplied, installed, and paid for under a separate item.

Pay Item	**Description**	**Pay Unit**
910.301	Special Work – Utility Conduit (TWC - Approaches Only)	Lump Sum

Required Pre-Installation Meeting: Before beginning any utility installation work a utility meeting shall be held with all utilities, the MaineDOT Resident, and MaineDOT Utility Coordinator (Calvin Seeley).

APPENDIX B

CONTRACT DOCUMENTS

FOR

BRIDGE ST BRIDGE and

MAIN ST

WATER MAIN REPLACEMENT

Westbrook, Maine

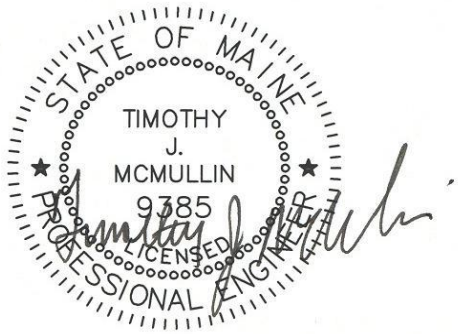

August 2013

P O R T L A N D W A T E R D I S T R I C T
225 Douglass Street
Portland, Maine 04104-3553

Document #	Title	Page
	DIVISION 1 - GENERAL REQUIREMENTS	
01001	Description of Work	2
01035	Control of Work	4
01151	Measurement and Payment	6
01310	Submittals	12
01710	Cleanup	13
	DIVISION 2 - SITE WORK	
02217	Excavation and Backfill for Water Mains	14
02219	Bedding and Backfill Material	21
02536	Temporary Water Systems	23
02537	Ductile Iron Water Pipe and Fittings	26
02540	Bridge Supported D.I. Water Main	30
02594	Pressure and Leakage Testing of D.I. Water Mains	34
02595	Disinfection of Water Mains	36
02999	Water Main Materials Specifications:	
	Bolts and Nuts	39
	Cast Iron or Ductile Iron Split Repair Sleeve	40
	Corporation Stops	41
	Curb Stops	42
	Cut-In Sleeve	43
	Ductile Iron Fittings	44
	Ductile Iron Pipe	45
	Fire Hydrant	46
	Pipe Joint Restrainer	48
	Polyethylene Encasement	49
	Resilient Seat Gate Valve	50
	Insertion Gate Valve	52
	Restrained Joint Gaskets	53
	Service Box and Rod	54
	Service Saddles	56
	Stainless Steel Repair Clamps	57
	Tapping Sleeves	58
	Valve Boxes	60

SECTION 01001 - DESCRIPTION OF WORK

PART 1: GENERAL

1.1 SCOPE:

A. The CONTRACTOR shall furnish and install ductile iron water main, related piping and appurtenances, as shown on the drawings and specified herein.

B. The CONTRACTOR shall perform leakage and pressure tests and disinfect the installed water main as specified herein.

1.2 DUTIES OF THE OWNER / PORTLAND WATER DISTRICT:

A. The OWNER / PORTLAND WATER DISTRICT will locate the terminal points of the work and will also locate any of its facilities lying in close proximity which would in any way be a hazard to the CONTRACTOR'S operations.

B. The OWNER / PORTLAND WATER DISTRICT will operate any valves or hydrants which may be found desirable or necessary to be used for any purpose.

C. The OWNER will notify customers of all work involving temporary shutdown of service.

1.3 DUTIES OF THE CONTRACTOR:

A. The CONTRACTOR will familiarize himself with all obstructions which he can foresee, including but not limited to existing pipes, services, conduits, ducts, sewers, wires, cables, utility poles, signs or any other such obstructions which might interfere with the construction, and he agrees to make arrangements with the owners of such facilities so as to save the OWNER / PORTLAND WATER DISTRICT harmless from any damages thereto caused by his operations and to make whatever arrangements might be necessary to move or remove and replace these facilities so as to permit the construction, all at his own expense. The CONTRACTOR agrees that there will be no extras charged for this type of work, except by special agreement with the OWNER / PORTLAND WATER DISTRICT and upon written order from him.

B. The CONTRACTOR will make any changes which may be required, such as the removing or restoring of the property of others in the land through which this line will cross in right-of-way or otherwise. The CONTRACTOR will place all pipe, fittings and all attendant facilities to proper line and grade, as called for in the plans and specifications and to the satisfaction of the OWNER / PORTLAND WATER DISTRICT.

C. The CONTRACTOR must give the District at least 4 days notice prior to a shut down in order to properly notify customers.

D. The CONTRACTOR will furnish all fuel, gasoline, oil, etc. for the operation of his equipment, all tools and equipment, and all labor and supervision necessary for the handling of material, for excavation, installation, backfilling and cleaning the site as required. He will dispose of excess spoil and restore the land surface over the entire length of the project. Restoration shall be made to the satisfaction of the OWNER / PORTLAND WATER DISTRICT.

E. The CONTRACTOR will perform the pressure and leakage test and disinfection of the main as described herein in the presence of the OWNER / PORTLAND WATER DISTRICT.

F. The CONTRACTOR shall install the water mains to supply the PORTLAND WATER DISTRICT with a satisfactory, watertight pipeline, laid to proper line and grade in accordance with these contract documents to the satisfaction of the PORTLAND WATER DISTRICT.

G. The CONTRACTOR will obtain any necessary street opening permits and comply with all rules and regulations associated with the permits.

H. The CONTRACTOR install a temporary water system sufficient to maintain water service to all customers during the water main replacement.

END OF SECTION

SECTION 01035 - CONTROL OF WORK

PART 1: GENERAL

1.01 PLANT

A. The CONTRACTOR shall furnish plant and equipment which will be efficient, appropriate and large enough to secure a satisfactory quality of work and a rate of progress which will insure the completion of the work within the time stipulated in the Proposal. If at any time such plant appears to the Owner to be inefficient, inappropriate or insufficient for securing the quality of work required or for producing the rate of progress aforesaid, he may order the CONTRACTOR to increase the efficiency, change the character or increase the plant equipment, and the CONTRACTOR shall conform to such order. Failure of the Owner to give such order shall in no way relieve the CONTRACTOR of his obligations to secure the quality of the work and rate of progress required.

1.02 PIPE LOCATIONS

A. Pipelines shall be located substantially as indicated on the Drawings, but the Owner reserves the right to make such modifications in locations as may be found desirable to avoid interference with existing structures or for other reasons. Where fittings are noted on the Drawings, such notation is for the CONTRACTOR'S convenience and does not relieve him from laying and jointing different or additional items where required.

1.03 CARE AND PROTECTION OF PROPERTY

A. The CONTRACTOR shall be responsible for the preservation of all public and private property, and shall use every precaution necessary to prevent damage thereto. If any direct or indirect damage is done to public or private property by or on account of any act, omission, neglect, or misconduct in the execution of the work on the part of the CONTRACTOR, such property shall be restored by the CONTRACTOR, at his expense, to a condition similar or equal to that existing before the damage was done, or he shall make good the damage in other manner acceptable to the Owner.

1.04 PROTECTION AND RELOCATION OF EXISTING STRUCTURES, TREES AND UTILITIES

A. The CONTRACTOR shall assume full responsibility for the protection of all trees, buildings, structures, and utilities, public or private, including poles, signs, services to buildings, buried utilities, gas pipes, water pipes, hydrants, sewers, drains, and electric and telephone cables, whether or not they are shown on the Drawings. The CONTRACTOR shall carefully support and protect all such structures and utilities from injury of any kind. Any damage resulting from the CONTRACTOR'S operations shall be repaired by him at his expense.

B. Protection and temporary removal and replacement of existing utilities and structures as described in this Section shall be a part of the work under the Contract and all costs in connection therewith shall be included in the Prices in the Proposal.

1.05 CLEANUP

A. During the course of the work, the CONTRACTOR shall keep the site of his operations in as clean and neat a condition as is possible. He shall dispose of all residues resulting from the construction work and, at the conclusion of the work, he shall remove and haul away any surplus excavation, lumber, equipment, temporary structures, and any other refuse remaining from the construction operations, and shall leave the entire site of the work in a neat and orderly condition.

END OF SECTION

SECTION 01151 - MEASUREMENT AND PAYMENT

PART 1: GENERAL

1.1 METHOD OF MEASUREMENT AND BASIS OF PAYMENT:

All measurements for payments will be based on completed work performed in strict accordance with the drawings and specifications, and on the contract bidding and payment item schedules. Some specifications are contained in the MDOT document sections. All work completed under the contract will be measured by the PORTLAND WATER DISTRICT ("DISTRICT") according to the methods outlined below. In cases where the payment clause in the specifications relating to any unit or lump sum price stated in the contract requires that the said unit or lump sum price cover and be considered compensation for certain work or material essential to the item, this same item will not be measured or paid for under any other pay item which may appear elsewhere in the specifications.

PART 2: PAYMENT ITEMS:

2.1 ITEM NO. (203.25) – Gravel Borrow

A. Method of Measurement: Cubic yards as measured in place for the actual number of yards of gravel borrow installed.

B. Basis of Payment: Payment of the unit price established in the Bid shall be full compensation for excavation, installation and compaction of gravel borrow as directed by the ENGINEER to replace unsuitable excavated material.

C. Schedule of Payment: Installation – 100%

2.2 ITEM NO. (304.09 & 304.10) Aggregate Base Course & Subbase Course

A. Method of Measurement: Cubic yards as measured in place for the actual number of yards of gravel base installed.

B. Basis of Payment: Payment of the unit price established in the Bid shall be full compensation for installation and compaction of base or subbase gravel as specified herein or as directed by the ENGINEER.

C. Schedule of Payment: Installation - 100%

2.3 ITEM NO. (403.207 & 403.208) – Hot Mix Asphalt

A. Method of Measurement: The volume will be measured in place for the actual quantity of paving installed within the pay limits indicated on the drawings. The total paving volume will be converted to weight in tons by the following formula for payment under this bid item.

Paving Area	x	Paving Thickness	x	0.06	=	Paving Weight
(square yards)		(inches)				(tons)

B. Basis of Payment: Payment of the unit price established in the Bid shall be full compensation for placing paving , tack coats, clean up and associated work as specified and shown on the Drawings.

C. Schedule of Payment: Installation - 100%

2.4 ITEM NO. (608.08) – Reinforced Concrete Sidewalk

A. Method of Measurement: Square yards as measured in place for the actual area of sidewalk installed.

B. Basis of Payment: Payment of the unit price established in the Bid shall be full compensation for demolition of existing sidewalk, placing concrete, finishing, clean up and associated work as specified and shown on the Drawings.

C. Schedule of Payment: Installation - 100%

2.5 ITEM NO. (609.38) Resetting Curb Type 1

A. Method of Measurement: Linear feet as measured along the centerline of the curb for the actual curbing reset.

B. Basis of Payment: Payment of the unit price established in the Bid shall be full compensation for curb removal, resetting, cleanup and associated work as specified and shown on the drawings.

C. Schedule of Payment: Installation – 100%

2.6 ITEM NO. (625.01) Water Line System - Temporary

A. Method of Measurement: Lump Sum

B. Basis of Payment: Payment of the unit price established in the Bid shall be full compensation for laying and jointing, maintenance, removal, testing and associated work as specified and shown on the Drawings.

C. Schedule of Payment: Installation – 85%; Removal – 15%

2.7 ITEM NO. (629.05) Hand Labor, Straight Time

A. Method of Measurement: Total man-hours.

B. Basis of Payment: Unit price per man-hour as stated in the Bid. Payment shall include wages, benefits and overhead and profit for personnel for the purpose of performing extra work at the request of P.W.D.

C. Schedule of Payment: Completion of work – 100%

2.8 ITEM NO. (631.12, 631.172, 631.22) – Excavator, Truck and Loader

A. Method of Measurement: Total hours.

B. Basis of Payment: Unit price per hour as stated in the Bid. Payment shall include equipment and operator/driver, wages, benefits, fuel and overhead and profit for the purpose of performing extra work at the request of P.W.D.

C. Schedule of Payment: Completion of work – 100%

2.9 ITEM NO. (652.38 & 652.381) – Flagger and Traffic Officer

A. Method of Measurement: The accepted quantity of flagger and uniformed police officer time will be the number of hours the designated station is occupied. The number of hours authorized for payment will be measured to the nearest ¼ hour.

B. Basis of Payment: The accepted quantities of flagger hours and uniformed police officer (incl. cruiser) hours will be paid for at the contract unit price for each station occupied, with no additional payment for overtime or transportation. The contract unit price shall be full compensation for hiring, transporting, equipping, supervising, and the payment of flaggers, uniformed police officers and all overhead and incidentals necessary to complete the work.

C. Schedule of Payment: Completion of work – 100%

2.10 ITEM NO. (822.3225, 822.3405, 822.3605) Ductile Iron Pipe - Push on Joint

A. Method of Measurement: Linear feet as measured along the centerline of the pipe for the actual number of linear feet of pipe and fittings installed.

B. Basis of Payment: Payment of the unit price established in the Bid shall be full compensation for excavating, pipe, fittings, polyethylene encasement,

laying and jointing, removal and disposal of existing piping and appurtenances, connections to existing pipes, abandoning existing pipes and appurtanences, bedding, select backfill, backfilling, testing, construction signs, electronic message boards, and associated work as specified and shown on the Drawings.

C. Schedule of Payment: Installation – 90%; Testing – 10%

2.11 ITEM NO. (822.3632, 822.3633) Ductile Iron Pipe - Restrained Joint

A. Method of Measurement: Linear feet as measured along the centerline of the pipe for the actual number of linear feet of pipe and fittings installed.

B. Basis of Payment: Payment of the unit price established in the Bid shall be full compensation for insulated pipe, pipe, fittings, laying and jointing, removal and disposal of existing piping and appurtenances, select backfill, connections to existing pipes, bedding, testing, construction signs, electronic message boards, and associated work as specified and shown on the Drawings.

C. Schedule of Payment: Installation – 90%; Testing – 10%

2.12 ITEM NO. (823.31, 823.325, 823.331) Gate Valve, Cut-In Gate Valve, Insertion Gate Valve

A. Method of Measurement: Actual number installed

B. Basis of Payment: Payment of the unit price established in the Bid shall be full compensation for excavation, shoring and bracing, dewatering, valve, removal and disposal of existing valves, valve box, backfill, testing and associated work as specified and shown on Drawings.

C. Schedule of Payment: Installation – 100%

2.13 ITEM NO. (822.315) Tapping Sleeve - 12”x6” & 8”x6”

A. Method of Measurement: Actual number installed

B. Basis of Payment: Payment of the unit price established in the Bid shall be full compensation for excavation, shoring and bracing, dewatering, tapping sleeve, backfill, testing and associated work as specified and shown on Drawings.

C. Schedule of Payment: Installation – 100%

2.14 ITEM NO. (823.34) –Blow-Off Assembly

A. Method of Measurement: Actual number installed

B. Basis of Payment: Payment of the unit price established in the Bid shall be full compensation for excavation, shoring and bracing, dewatering, valve, fittings, backfill, testing and associated work as specified and shown on Drawings.

C. Schedule of Payment: Installation – 100%

2.15 ITEM NO. (823.341) Air Release Valve – 1”

A. Method of Measurement: Actual number installed

B. Basis of Payment: Payment of the unit price established in the Bid shall be full compensation for excavation, shoring and bracing, dewatering, corporation, angle valve, fittings, operating rod, service box, valve box, installation, backfill, testing and associated work as specified and shown on the Drawings.

C. Schedule of Payment: Installation – 100%

2.16 ITEM NO. (824.30) Fire Hydrant

A. Method of Measurement: Actual number installed

B. Basis of Payment: Payment of the unit price established in the Bid shall be full compensation for excavation, shoring and bracing, dewatering, hydrant, removal and disposal of existing hydrant, thrust blocks, backfill, testing, and associated work as specified and shown on Drawings.

C. Schedule of Payment: Installation – 100%

2.17 ITEM NO. (824.32) Remove/Reset Hydrant

A. Method of Measurement: Actual number relocated

B. Basis of Payment: Payment of the unit price established in the Bid shall be full compensation for excavation, shoring and bracing, dewatering, hydrant removal, hydrant resetting, thrust blocks, backfill, testing, and associated work as specified and shown on Drawings.

C. Schedule of Payment: Installation – 100%

2.18 ITEM NO. (825.434, 825.431) – Copper Service

A. Method of Measurement: Linear feet as measured along the centerline of the pipe for the actual number of linear feet of tubing and fittings installed.

B. Basis of Payment: Payment of the unit price established in the Bid shall be full compensation for excavation, shoring and bracing, dewatering, pipe, corporation, saddle, fittings, connection to existing service, service box, rod, curb stop, backfilling and associated work as specified and shown on Drawings.

C. Schedule of Payment: Installation – 100%

2.19 ITEM NO. (827.301) – Rock Removal

A. Method of Measurement: Cubic yard measured in place for the actual number of cubic yards of rock removed within the pay limits shown on the drawings. Boulders less then two cubic yards in volume will not be measured for payment.

B. Basis of Payment: Payment of the unit price established in the Bid shall be full compensation for excavation, shoring and bracing, dewatering, excavation, select backfill replacement, erosion control, cleanup and associated work as specified and shown on the Drawings.

C. Schedule of Payment: Excavation - 100%

2.20 ITEM NO. (827.302)– Unsuitable Material Excavated Below Pipe Grade

A. Method of Measurement: Cubic yard as measured in place prior to removal for the actual number of cubic yards excavated within the limits shown on the Drawings and directed by the ENGINEER.

B. Basis of Payment: Payment of the unit price established in the Bid shall be full compensation for removing unsuitable material excavated below trench grade and replacing with granular bedding material as directed by the ENGINEER.

C. Schedule of Payment: Installation – 100%

2.21 ITEM NO. (830.15) Water Main Bridge Crossing Hanger System

A. Method of Measurement: Lump Sum

B. Basis of Payment: Payment of the unit price established in the Bid shall be full compensation for furnishing and installing all components to secure the water main to the bridge including rollers, insulations shields, threaded rod, fittings, inserts, wall penetration sleeves and seals and associated work specified herein and shown on the Drawings.

C. Schedule of Payment: Installation - 100%

END OF SECTION

SECTION 01310 - SUBMITTALS

PART 1 - GENERAL

1.01 SUBMITTALS FOR OWNER'S APPROVAL

A. For all products to be incorporated into the Work submit to the OWNER for approval sufficient information in the form of shop drawings, product data and/or samples such that the OWNER can determine that the product is in compliance with the Technical Specifications and Drawings.

B. Submit two (2) copies of each submittal. One (1) copy will be returned to the CONTRACTOR. Each copy shall include a cover sheet which clearly identifies the product and corresponding specification section. Each cover sheet shall bear the CONTRACTOR’S stamp and signature certifying that the submittal is in full compliance with the Contract Documents or that any deviations from the Contract Documents are clearly identified on a separate sheet(s) labeled "Deviations From Contract Documents" and attached to the cover sheet.

C. OWNER's Review: The OWNER shall review the submittals and indicate their status as:

1. NO EXCEPTION TAKEN.
2. FURNISH AS CORRECTED.
3. REVISE AND RESUBMIT.
4. REJECTED.

OWNER's review is only for general conformance with the design concept and general conformance with the information given in the Contract Documents. Corrections or comments made during the review do not relieve the CONTRACTOR from compliance with the requirements of the Contract Documents.

D. Re-submittals: Make re-submittals under procedures specified for submittals; identify changes made since previous submittal.

E. CONTRACTOR shall be responsible for the delays and or additional expenses that result from the CONTRACTOR’S failure to submit a complete submittal and/or to identify portions of the submittal that does not conform to the specifications.

SECTION 01710 - CLEANUP

PART 1: GENERAL

1.1 SCOPE:

A. The work covered by this section is to provide all cleanup over the entire project.

PART 2: PRODUCTS

2.1 METHOD:

A. The CONTRACTOR may choose any method he wishes for cleanup and shall assume all responsibility for the adequacy of the method and equipment employed.

PART 3: EXECUTION

3.1 CLEANING UP:

A. During the progress of the work, the construction areas shall be kept clean and all rubbish, surplus materials, and unneeded construction equipment shall be removed and all damages repaired so that the public and property owners will be inconvenienced as little as possible.

B. CONTRACTOR shall fill in all depressions and water pockets on public and private property caused by his operations; clean all drains, ditches and culverts which have been obstructed by his work; and, shall leave the site in a neat condition wherever his operations have disturbed existing conditions.

C. CONTRACTOR shall make restitution for any damage to trees, shrubbery or other structures or facilities owned by adjacent property owners.

D. Cleanup shall follow directly behind the progress of the project.

E. All excess material, rubbish or other type of mess shall be cleaned up and the site shall be left to the satisfaction of the right-of-way grantor, or any abutters, as well as to the satisfaction of any municipal or state authority which may be involved if in public right-of-way.

F. Any damage to or displacement of street or highway surfaces due to blasting or otherwise shall be either replaced satisfactorily by the CONTRACTOR or shall be paid for by him to the authority responsible for the street or highway.

END OF SECTION

SECTION 02217 - EXCAVATION AND BACKFILLING FOR WATER MAINS

PART 1: GENERAL

1.1 SCOPE:

A. This section includes all excavation for water mains, hydrants and appurtenances, including drainage, sheeting and bracing, backfilling, disposal of surplus material, and miscellaneous grading. All work shall be done as indicated on the drawings and as herein specified.

B. Excavation for water mains shall be the width and depth as indicated on the standard details. Excavation for hydrants and appurtenances shall provide suitable room for their construction.

C. The CONTRACTOR shall furnish and place all sheeting, bracing and supports, and necessary dewatering, and shall carry out the excavation in such a manner as to eliminate all possibilities of undermining or disturbing existing pipelines, utilities, roadways, shoulders and/or structures.

1.2 RELATED WORK SPECIFIED ELSEWHERE:

Bedding and Backfill Material - Section 02219

PART 2: PRODUCTS

2.1 EQUIPMENT:

Equipment shall be at CONTRACTOR'S option.

PART 3: EXECUTION

3.1 EXCAVATION:

A. When any pavement, regardless of type, must be cut, it shall be done in a neat and symmetrical manner by use of a saw, chisel, or other suitable method. In no case shall pavement be torn up with a backhoe bucket except between and inside of cuts previously made as above. Should any further pavement be broken, outside of the cuts, as by blasting, such damaged pavement shall be cut out in a neat and orderly fashion.

B. The CONTRACTOR shall perform all excavation of every description and of whatever substances encountered to the depths shown on the drawings or directed by the ENGINEER.

C. No extras will be allowed for quicksand excavation, muck excavation, or any other type unless specifically provided for in the bidding schedule.

D. Surplus excavated material may be used at other parts of the construction project as required for fill, etc. Excess material shall be disposed of by the CONTRACTOR.

E. The sidewalls of all trench excavation shall be kept as nearly vertical as possible in all roadways, lawns, near homes, etc. by sheeting, bracing, or other means. The width of the trench at a point six (6) inches above the top of the water pipe shall not be greater than the width detailed. If the type of excavated material will not allow the width detailed, then the trench shall be properly sheeted and braced. The cost of sheeting, bracing, or other means is included in the cost of the pipelines and no extras will be allowed.

F. The excavation shall be made to secure a flat bottom trench (undisturbed earth bottom) for the full length of the pipe so as to give a uniform support to the pipe and shall be in accordance with ANSI A21.50 (AWWA C150), Type 2 Laying Condition.

G. The bottom of the trench shall be accurately graded to provide support to the full length of the pipe barrel. Excavate at each bell to prevent bell from bearing on trench bottom.

3.2 EXCAVATION BELOW TRENCH GRADE:

A. By mistake of CONTRACTOR: Where the bottom of the trench shall, by mistake of the CONTRACTOR, have been taken out to a greater depth than required, it shall be refilled to the proper grade with bedding material, and all to be placed and compacted as specified. The CONTRACTOR shall receive no additional compensation.

B. By instruction from ENGINEER: If, in the opinion of the ENGINEER, existing material below trench grade is unsuitable for properly laying the pipe, the CONTRACTOR will excavate and remove the unsuitable material and replace the same with bedding material as authorized by the ENGINEER and properly compacted to his satisfaction. The CONTRACTOR will be paid under the item titled "Unsuitable Material Excavated Below Trench Grade."

3.3 EXCAVATION NEAR EXISTING UTILITIES, ETC.

A. It will be necessary to excavate near existing pipes, drains and other utilities in certain locations. Some of these have been indicated on the drawings, but no attempt has been made to show all of the services and the completeness and accuracy of the information given is not guaranteed. The CONTRACTOR shall call "Dig-Safe" at least three business days in advance of any excavation to allow utilities to locate underground facilities.

B. As the excavation approaches pipes, conduits, or other underground structures and utilities, digging by machinery shall be discontinued and the excavation shall be done by means of hand tools.

C. If the utility is of the opinion that at any point sufficient or proper support has not been provided, they may order additional supports placed at the expense of the CONTRACTOR. Compliance with such order shall not relieve the CONTRACTOR from his responsibility for the sufficiency of such supports. It shall be the responsibility of the CONTRACTOR to prevent damage to or displacement of utilities and to consult with and request the concurrence of the utility company's representative in this matter at all locations. The cost of protecting such utilities shall be considered incidental to the cost of laying the pipe.

3.4 TRENCH SURCHARGES:

The excavated material shall be placed adjacent to the excavation in a manner to cause no excessive surcharge on the trench bank nor to obstruct free access to hydrants and valves. Should traffic or other conditions make it impractical or unsafe to stack material adjacent to trench, it shall be hauled and stored at a location provided by the CONTRACTOR and at the expense of the CONTRACTOR. When required, it shall be re-handled and used in backfilling the trench by the CONTRACTOR and at his expense.

3.5 SHEETING AND BRACING:

A. The CONTRACTOR shall be responsible for the design, construction, maintenance and safety of all sheeting and bracing required to support the sides of the excavation and to prevent the movement of earth which could in any way damage or endanger adjacent structures, utilities, roadways, increase the width of the excavation to more than that specified, or delay the work.

B. All sheeting, bracing and shoring is to be included in prices bid for several items of work in bidding schedule and will not be paid for as separate items.

C. No shoring shall be left in place unless so directed by the ENGINEER.

3.6 DRAINAGE AND DEWATERING OF EXCAVATIONS:

A. The CONTRACTOR shall conduct his operations so as to prevent at all times the accumulation of water, ice and snow in excavations or in the vicinity of excavated areas so as to prevent water from interfering with the progress or quality of the work. Under no conditions shall water be allowed to rise in unbackfilled trenches after pipe has been placed.

B. Accumulated water, ice and snow shall be promptly removed and disposed of by dewatering. Disposal shall be carried out in a manner which will not create a hazard to public health; nor cause injury to public or private property, work completed or in progress, or public streets; nor cause any interference in the use of streets and roads by the public. Pipes under construction shall not be used for drainage of excavations.

C. During construction, when an unstable condition in the pipe sub-grade has been created due to the CONTRACTOR'S excavation, the sub-grade shall be stabilized by dewatering or other means accepted by the ENGINEER.

3.7 BACKFILLING - GENERAL:

A. In general and unless other material is indicated on the drawings or is specified, material used for backfilling trenches and excavations around structures shall be suitable material which was removed in the course of making the construction excavations or as specified.

B. Frozen materials shall not be placed in the backfill, nor shall material be placed upon frozen material. Previous frozen material shall be removed or shall be otherwise treated as required before new backfill is placed.

C. Backfilling shall be done as soon as practical after the pipe has been laid and jointed.

3.8 SUITABLE BACKFILL MATERIAL:

Suitable backfill material shall be the following or a combination of the following:

(1) Excavated material that will compact to the compaction requirements.
(2) Material that does not contain rocks larger than 8" in any dimension.
(3) Dry clay backfill free from lumps.
(4) Wet clay that alone would pump but when mixed with sand and/or gravel will be stable and will compact.

3.9 BACKFILLING PIPE TRENCHES:

A. As soon as practicable after the pipes have been laid and jointed, backfilling shall begin and shall proceed until it is completed or has sufficient backfill to allow pipe testing.

(1) The first layer of suitable backfill material shall be brought half-way up the pipe and compacted to 80% maximum density and then the normal backfilling shall begin and shall be compacted as specified.

(2) All backfill shall be thoroughly compacted by hand tamping as placed, by use of mechanical or vibratory compactors, or by other acceptable methods.

(3) Remainder of the trench shall be backfilled as follows:

a) In paved areas, road shoulders and seeded areas, the entire depth of trenches above the center line of the pipe shall be backfilled in eight (8) inch layers with suitable backfill material and each layer thoroughly and carefully compacted as specified. Bring backfill up to bottom of gravel base and/or loam.

b) In other areas, the trench above the center- line of the pipe shall have suitable backfill material placed and compacted in eighteen (18) inch maximum layers as specified.

B. The nature of the excavated materials will govern both their acceptability for backfill and the method best suited for their placement and compaction in the backfill.

(1) Both the materials and the methods shall be subject to the acceptance of the ENGINEER.
(2) No stones or rock larger than 8" in the greatest dimension shall be placed in the backfill.

C. Backfilling in public right-of-way, along the streets or highways in or along shoulder, berm or backslope shall be done in accordance with the specifications and requirements of the state or municipality, whichever is responsible for the street or highway involved. Responsibility for the fulfillment of permit conditions or any other applicable requirements of the street or highway authority shall be the obligation of the CONTRACTOR. Surface restoration shall be carried out to the satisfaction of the street or highway authority or as shown on the plans.

D. Backfilling shall follow pipe laying as closely as reasonable, so that a minimum of trench shall be open at any time. The regulations of the highway authorities shall be observed as regards the amount of trench to be open at any one time. Over night, and especially over weekends and holidays, the amount of open trench shall be kept at an absolute minimum. Any caved-in trench, especially after heavy rain and flooding, shall be cleaned out and the bottom consolidated before any additional pipe shall be laid.

3.10 TOP OF BACKFILL:

A. In paved and shoulder areas, backfill shall be carried up to pavement or shoulder sub-grade ready to receive the gravel base. In other areas, backfill shall be brought up to adjacent finished grade minus the depth of any required topsoil and so as to provide a finished surface slightly mounded over the trench. Any trenches improperly backfilled, or where settlement occurs, shall be reopened to the depth required for proper compaction, and shall then be refilled and compacted with the surface restored to required grade and degree of compaction, mounded over, and smoothed off, at no additional expense.

B. In unpaved areas, the gravel topping shall be left in a smooth and even condition, with no large stone on or in the surface. In cases where a paved surface has been broken, a temporary bituminous patch and/or a permanent paving restoration shall be made as required by the appropriate local or state road authority.

3.11 COMPACTION:

A. Compaction densities specified herein shall be the percentage of the maximum density obtainable at optimum moisture content as determined and controlled in accordance with AASHTO Standard T-180, Method A or D depending on the material size. Field density tests shall be made in accordance with AASHTO Standard T-147.

Each layer of backfill shall be moistened or dried as required and shall be compacted to the following densities, unless otherwise specified in the project specifications.

(1)	Bedding material	80%
(2)	Suitable backfill material under paved or shoulder areas	90%
(3)	Gravel base:	
	(a) Under paved areas	95%
	(b) In shoulder areas	90%
	(c) As replacement for unsuitable material excavated below grade	90%
(4)	Loam areas	90%
(5)	All other areas	85%

B. Methods and equipment proposed for compaction shall be subject to prior acceptance by the ENGINEER. Compaction generally shall be done with vibrating equipment. Displacement of, or injury to, the pipe and structure shall be avoided. Movement of in-place pipe or structures shall be at the CONTRACTOR'S risk. Any pipe or structure damaged thereby shall be replaced or repaired as directed by the ENGINEER and at the expense of the CONTRACTOR.

C. Testing:

(1) Field density tests may be ordered by the ENGINEER for each foot of depth of backfill at an average interval of 200 feet along the trench.

(2) The CONTRACTOR shall furnish all necessary samples for laboratory tests and shall provide assistance and cooperation during field tests. The CONTRACTOR shall plan his operations to allow adequate time for laboratory tests and to permit taking of field density tests during compaction.

(3) Any costs of retesting required as a result of failure to meet compaction requirements shall be borne by the CONTRACTOR.

3.12 FILL AND GRADING:

A. Excavated material not required for backfilling around pipes or structures may be used for fill in areas which require material for re-grading.

B. The re-grading shall be carried out as directed by the ENGINEER, so that all surface water will drain towards brooks or drainage pipes.

C. All material shall be of such nature that after it has been placed and properly compacted, it will make a dense and stable fill.

3.13 PROTECTION OF EXISTING STRUCTURES:

. All existing pipes, wires, poles, fences, property line markers and other items, which must be preserved in place without being temporarily or permanently relocated, shall be carefully supported and protected from injury by the CONTRACTOR, at no additional cost to the OWNER. Should such items be injured, they shall be restored by the CONTRACTOR, without compensation therefore, to at least as good condition as that in which they were found immediately before the work was begun.

3.14 ACCOMMODATION OF TRAFFIC:

A. The CONTRACTOR shall construct and maintain, without extra compensation, such adequate and proper bridges over excavations as may be necessary or as directed for the safe accommodation of pedestrians and vehicles. The CONTRACTOR shall furnish and erect, without cost to the OWNER, substantial barricades at crossing of trenches, or along the trench, to protect the traveling public.

B. The CONTRACTOR shall not obstruct fire hydrants.

END OF SECTION

SECTION 02219 - BEDDING AND BACKFILL MATERIAL

PART 1: GENERAL

1.1 SCOPE:

A. The CONTRACTOR shall furnish, place and compact various types of bedding material and trench sand as called for in the specifications or as directed.

B. The types and quality of bedding and backfill material are specified in this section, but its use for pipe bedding, backfill, replacement of unsuitable material excavated below trench grade, and other uses are as specified elsewhere.

1.2 RELATED WORK SPECIFIED ELSEWHERE:

Excavation and Backfilling for Water Mains - Section 02217

PART 2: PRODUCTS

2.1 MATERIALS:

A. Bedding Material:

1. Screened or crushed gravel bedding material shall be hard durable particles free from organic matter, lumps of clay and other deleterious substances. The gradation shall meet the requirements of the following table and MDOT specifications Section 703.06 Type B aggregate

Sieve Size Designation	% By Weight
1/2 inch	35 - 75
1/4 inch	25 - 60
No. 40	0 - 25
No. 200	0 - 5.0

2. Select backfill as specified below may be used for bedding material.

3. Bedding material shall not contain particles of rock which have any dimensions greater than 4”.

B. Select Backfill:

1. Sand backfill shall be hard, durable particles of granular material with 100% passing the 1/2" sieve and between 0-15% passing the #200 mesh. All percentages are by weight. Sand shall be graded so as to secure the required compaction.

C. Backfill:

1. Suitable native material that does not contain stone or rock particles with any dimensions greater than 8”.

2. Bank Run gravel borrow consisting of uniformly graded granular material having no rocks with a maximum dimension greater than 8” and that portion passing a 3-inch square mesh sieve shall contain no more than 70% passing 1/4 inch mesh sieve and not more than 10% passing a No. 200 mesh sieve.

PART 3: EXECUTION

3.1 METHODS:

The materials will be used in accordance with the requirements of the various sections of the specifications, drawings and standard details.

END OF SECTION

SECTION 02536 – TEMPORARY WATER SYSTEMS

In order to maintain uninterrupted water service to District customers, the CONTRACTOR shall provide temporary above ground water systems. The temporary water systems consist of mains, services and fire department outlets. The above ground systems shall be installed only for the duration of deep water main replacement and removed promptly after main replacement is complete. Connections to an existing water source shall be installed and provided by the District. All material for the temporary water systems, except as otherwise indicated, shall be supplied by the contractor. Currently the District has approved 2 manufacturers for the temporary mains and 100-psi poly tube for individual services. Only authorized District personnel shall operate control valves attached to these systems.

Temporary Water Systems Approved Pipe

CertainTeed Certa-Lok Yellowmine	Restrained Joint PVC pressure pipe and fittings
AquaMine (Victaulic Co)	Restrained Joint PVC pressure pipe and fittings

Temporary above ground water mains shall be installed in a manner to both protect the public water supply and to minimize customer service interruption. To allow the District to notify it's affected customers, the CONTRACTOR shall provide the District a minimum of 5 working days notice prior to installing any temporary lines.

The size and approximate location of the temporary systems are shown on the drawings. The CONTRACTOR must obtain the approval of the District for any changes prior to installation of the system.

Temporary mains shall typically be installed behind sidewalks or along the edge, and within the public right of way. The mains shall follow a uniform straight course and shall not bow to accommodate long sections of pipe. Temporary mains shall not be installed on private property. The route of services lines installed from the mains to houses shall be acceptable to the property owner.

The CONTRACTOR shall follow the pipe manufactures installation guidelines when installing temporary systems. Additionally, an approved joint lubrication for the installation of potable water pipe shall be used on all joints prior to connecting pipe.

Source: The District will provide necessary connections at fire hydrants including an approved backflow device and meter. A chlorine tap will also be provided.

Disinfections: All 2” diameter and larger temporary mains shall be chlorinated, sampled, and tested for bacteria prior to activating any portion of the temporary mains. (See disinfection specification for deep mains).

Leakage test: All systems shall be watertight. A static pressure test shall be performed on all systems prior to disinfecting any portion of the system.

Test Procedure

1. Install a pressure gauge at furthest end of the system.
2. Open main feed valve to fully charge the system with water and bleed all air.
3. Record the static pressure reading.
4. Close main feed valve.
5. The system must hold static pressure for a minimum of 30 minutes.

Driveway crossings: A gravel or cold patch raised berm shall be placed over temporary mains to prevent vehicles from dragging along the ridge.

Sidewalk crossings: A gravel or cold patch raised berm shall be placed over temporary mains to eliminate tripping hazards. In areas where the berm would prevent rainwater drainage plywood ramps shall be installed the full width of the sidewalk and over the temporary mains

Roadway crossings: Temporary mains shall be buried just below the surface of the roadway. The pipe shall be protected with clean sand or material free from rocks, as the rocks tend to punch through the pipe when exposed to heavy traffic. The use of cold patch or QPR as fill material is acceptable.

Curbing or esplanade rise: To accommodate curb rise, pre-fabricated certa-lock bends and/or elbows shall be used. Sweeping or bending the actual pipe is not an acceptable method unless the sweep lies flat on the ground and is not obstructing walkways. A traffic barrel shall be placed near the curb at offset connections to protect the offsets from being damaged by vehicles.

Cutting pipe: Follow manufacturer’s installation instructions. All joints, including those on cut lengths of pipe, shall be grooved to provide a restrained joint. Pre-fabricated bends, elbows, and tees shall be used when changing direction.

Blow off: A 1” blow off shall be installed at the ends of all temporary mains. The blow off shall be constructed using a 1” brass female curb stop.

Isolation valves: Shall be 2” brass female curb stops for 2” mains and 4” resilient wedge valves for 4” mains (grip rings shall be used for 4” valves). Valves shall be located as shown on the plan. The valves are attached to the mains using pre-fabricated adapters.

Service line connections: All temporary individual service lines shall be ¾” poly tube rated at a minimum working pressure of 100 psi. The service lines shall be connected to a 2”x 3/4” factory tapped restrained joint coupling, then a ¾” close brass nipple, a ¾” female curb stop and a brass poly tube adapter ¾” insert x

male. The tube shall be extended to a sill cock (outside faucet) and connected using the same poly tube adapter. Prior to connecting the service, a garden hose connection, including a brass boiler drain or sill cock valve shall be installed in the line. All service lines shall be flushed prior to activating mains.

Anti-siphon sill cocks: Only District authorized personnel shall disassemble anti-siphon sill cocks.
Excavating and connecting into existing deep service lines may be required where properties have malfunctioning sill cocks or no exterior plumbing.

Shutting off meters: After activating the temporary lines, all meters shall be shut off. Only District authorized personnel may de-activate meters.

Maintenance of temporary water systems: The contractor shall be responsible for maintaining the temporary systems during the regular workday including making repairs to the systems. The District's Inspector must be on site prior to any work, or repairs being performed on the temporary water systems. District crews will respond to all after hours emergencies. All affected customers shall be notified as soon as possible prior to any service interruption.

It is expected that contractors will keep an inventory of readily available repair parts on hand enabling them to quickly respond to any type of problem. Restrained joints shall be maintained. The use of non-restrained joint couplings is prohibited. Joint leaks shall be cut out. The use of stainless steel wrap around repair clamps over pinholes is acceptable.

END OF SECTION

SECTION 02537 - DUCTILE IRON WATER PIPE & FITTINGS

PART 1: GENERAL

1.1 SCOPE:

A. This section includes the furnishing and installing of ductile iron water pipe and ductile iron or cast iron fittings as specified.

1.2 RELATED WORK SPECIFIED ELSEWHERE:

A. Excavation and Backfill for Water Mains - Section 02217

B. Bedding and Backfill Material - Section 02219

1.3 SUBMITTALS:

A. Submit shop drawings for all material in accordance with the provisions of Section 01310.

PART 2: PRODUCTS

2.1 MATERIALS:

A. See Section 02999 – Water Main Material Specifications and Section 02540 for Bridge Suspended D.I. Water Main.

PART 3: EXECUTION

3.1 PIPE LAYING CONDITIONS:

A. The interior of each pipe shall be inspected while being joined to see that the alignment is preserved and to assure that no dirt or debris has entered the pipe after laying and partial backfilling.

B. Pipe fittings and accessories shall be carefully lowered into the trench, piece by piece, by means of derrick, crane, slings and other suitable tools and equipment, in a manner such as to prevent damage to the material or to its protective coating and linings. No chain or slings shall be passed through the inside bore of any pipe or valve or fitting. Under no circumstances shall piping materials be dropped or dumped into the trench.

3.2 LAYING DUCTILE IRON PIPE:

A. As soon as the excavation is completed and the existing trench bottom has been brought to the proper grade, the pipe shall be laid.

B. All pipe, before being lowered into the trench, shall be inspected inside and out. Both ends shall be cleaned and any visible dirt or debris removed from inside the pipe. Care shall be taken to lay the pipe to true lines and grades as shown on the drawings.

C. Coupling holes shall be excavated so that the barrel of the pipe shall bear upon the trench bottom.

D. Blocking under the pipe will not be permitted.

E. Each section shall rest upon the pipe bed for the full length of its barrel.

F. The circular rubber gasket shall be inserted in the gasket seat provided. A thin film of gasket lubricant shall be applied to the inside surface of the gasket. Gasket lubricant shall be a solution of vegetable soap or other solution supplied by the pipe manufacturer.

G. The spigot end of the pipe shall be cleaned and entered into the rubber gasket in the bell, using care to keep the joint from contacting the ground. The joint shall then be completed by forcing the plain end to the seat of the bell. Pipe which is not furnished with a depth mark shall be marked before assembly to assure that the spigot end is inserted to the full depth of the joint.

H. Pipe shall be aligned with the preceding unit and laid so as to form a close joint with the adjoining pipe and bring the inverts continuously to the required line and grade.

I. No length of pipe shall be laid until the previous length has had sufficient material tamped about it to firmly secure it in place so as to prevent any movement or disturbance.

J. Under no circumstances shall pipe be laid in water, and no pipe shall be laid when trench conditions or weather are unsuitable for such work, except by permission of the ENGINEER.

K. The pipe shall be laid with the bell ends facing the direction of the laying, unless otherwise permitted by the ENGINEER.

L. Joints, when made, shall be done in the manner prescribed by the manufacturer of the pipe. In the case of rubber gasket joints, these joints shall be made up in accordance with the American National Standards for the jointing of cast iron pressure pipe and fittings. (ANSI/AWWA C111/A21.11).

M. Thrust blocks shall be used behind tees, bends, or other fittings where shown. Size shall be appropriate for soil conditions and thrust forces acting on the specific fitting.

3.3 TRENCH BOTTOM:

A. Should the trench bottom contain unsuitable material, as indicated in Section 02217, Article 3.2-b, the CONTRACTOR shall over-excavate and replace with bedding material as required and authorized by the ENGINEER. The quantity of unsuitable material will be measured from the bottom outside of the pipe.

B. Should ledge be encountered, it shall be removed to a depth of 6" below the bottom of the pipe, and replaced with bedding material.

3.4 CUTTING PIPE:

A. All ductile iron pipe shall be cut using abrasive wheel cutter, rotary wheel hand cutter (with carbide cutter) or a guillotine pipe saw. All cuts shall be square and even with no ragged rough ends.

B. Field cut pipe lengths shall be beveled and filed to avoid damage to the gasket and facilitate making the joint.

C. When the cut end of pipe is to be used as a joint, the outside of the cut end shall be tapered back about 1/8-inch at an angle of about 30 degrees with the center line of the pipe. This shall be done with a coarse file or a portable grinder.

3.5 TEMPORARY PLUGS:

When pipelaying is not actually in progress, the openings of pipes shall be closed by temporary watertight plugs or other accepted means.

3.6 RETAINER GLANDS:

Install retainer glands on all mechanical joints of fittings, valves and hydrants.

3.7 POLYETHYLENE ENCASEMENT:

A. Tube type polyethylene encasement shall be installed on all ductile iron pipe and fittings in accordance with AWWA Standard C105 - latest revision, Method A. Circumferential wraps of tape or plastic tie straps shall be placed at 2-ft. intervals along the barrel of the pipe.

B. The polyethylene encasement shall prevent contact between the pipe and the surrounding backfill and bedding material but is not intended to be a completely airtight or watertight enclosure. All lumps of clay, mud, cinders, and so forth, on the pipe surface shall be removed prior to installation of the polyethylene encasement. During installation, care shall be exercised to prevent soil or

embankment material from becoming trapped between the pipe and the polyethylene.

C. The polyethylene film shall be fitted to the contour of the pipe to effect a snug, but not tight, encasement with minimum space between the polyethylene and the pipe. Sufficient slack shall be provided in contouring to prevent stretching the polyethylene where it bridges irregular surfaces, such as bell-spigot interfaces, bolted joints, or fittings, and to prevent damage to the polyethylene due to backfilling operations. Overlaps and ends shall be secured with adhesive tape, string, plastic tie straps, or any other material capable of holding the polyethylene encasement in place until backfilling operations are complete.

3.8 PRE-INSULATED PIPE:

A. Where indicated on the drawings pre-insulated pipe shall be installed. The manufacturer shall be a company regularly engaged in manufacture of pipe and fittings of types and sizes required, whose products have been in satisfactory use in similar service for not less than 3 years. Acceptable Manufacturers: Tricon Piping Systems Inc. or ENGINEER'S approved equal.

B. Pre-insulated pipe shall consist of a ductile iron carrier pipe and polyurethane foam insulation surrounded by HDPE casing pipe. All straight joints shall be covered with a polyken tape and covered with a HDPE rockshield. The insulation thickness shall be 2.16" for 12" ductile iron pipe.

C. The jacket in combination with the foam system shall be suitable for H-20 loading.

END OF SECTION

SECTION 02540 - BRIDGE SUPPORTED D.I. WATER PIPE AND APPURTENANCES

PART 1: GENERAL

1.1 SCOPE:

A. This section includes the furnishing and installing of bridge suspended insulated ductile iron water pipe as specified.

1.2 RELATED WORK SPECIFIED ELSEWHERE:

A. Ductile Iron Water Pipe and Fittings - Section 02537

1.3 SUBMITTALS:

A. Submit shop drawings for all material in accordance with the provisions of Section 01310. Submittal shall include a pipe layout plan detailing hanger support locations in relation to pipe bells for the entire length of the bridge to the first length outside of the abutments.

PART 2: PRODUCTS

2.1 MATERIALS:

A. Pre-Insulated Restrained Joint Ductile Iron Pipe:

1. Manufacturers: Firms regularly engaged in manufacture of pipe and fittings of types and sizes required, whose products have been in satisfactory use in similar service for not less than 3 years. Acceptable Manufacturers: Tricon Piping Systems Inc. or ENGINEER'S approved equal.

2. Pre-insulated pipe shall consist of a restrained joint ductile iron carrier pipe and polyurethane foam insulation surrounded by HDPE casing pipe. All joints shall be insulated with precut insulation and covered with a HDPE rockshield Once this is in place wrap joint with an oversized split HDPE sleeve and secure with nylon zip ties.

3. Ductile Iron Carrier Pipe shall be restrained joint type conforming to AWWA C151. U.S. Pipe TR-FLEX or equal. Pipe shall be class 52. The pipe shall be capable of 5 degree deflection. Pipes shall be 20' "full length" pipes to confirm to the layout of the utility support channel. Bell and spigot connections shall be in accordance with ANSI/AWWA C111.

4. The casing pipe shall be seamless, high density polyethyelene, ASTM D-1248. For the 12" carrier pipe the minimum casing thickness shall be 0.175 inches. The casing shall meet the following requirements:

ASTM D-638	Ultimate elongation 850%
ASTM D-638	Tensile yield strength 3300 psi

ASTM D-3350	Resin Type III, Grade P34
ASTM D-790	Tangent Flexural Modules 175,000 psi

6. Polyurethane Foam Insulation:

   (a) Polyurethane shall be a foamed in place closed cell which completely fills the annular space between the carrier pipe and the exterior casing.

Density:	2.0 to 2.5 lbs/cubic ft
Aged "K" (70ºF - 72 hrs)	0.147 BTU-in/hr-ft²-ºF
Closed Cell Content:	90-95%
Minimum Thickness of foam around 12" carrier pipe:	2.16 inches

   (b) Insulation concentricity: Carrier pipe shall be concentric to casing pipe. The allowable maximum deviation from centerline of carrier pipe shall be plus or minus ¼ inch at the casing center point and plus or minus 1/16 inch at the end seals.

7. This jacket in combination with the foam system shall be suitable for H-20 highway loading.

8. To the extent possible, pipe shall be accurately prefabricated at the factory to dimensions established at the construction site and worked into place without excessive springing or forcing, properly clearing all openings and equipment. Pipe ends shall have burrs removed by reaming and shall be installed to permit free expansion and contraction without damage to joints. Good workmanlike procedures shall be followed. Field cuts, if necessary, must be pre-approved by the District and performed in accordance with the manufacturer's recommendations using the proper tools.

9. Pipe and fittings shall be assembled in strict accordance with the manufacturer's printed directions by personnel who have been instructed in installation procedures by the manufacturer's representative.

B. <u>Wall Penetration Sleeves</u>:

Provide wall penetration sleeves where piping passes through masonry or concrete walls. Sleeves shall be a minimum of 3/8" thick epoxy coated steel pipe or smooth wall corrugated polyethylene pipe. Sleeves shall be held securely in proper position and location during construction. Sleeves shall be of sufficient length to pass through entire thickness of walls and of the diameter shown on the drawings.

C. Wall Penetration Seals:

1. All wall penetrations shall be sealed to prevent water from migrating through the wall penetration. Penetrations shall be sealed on both sides of the abutment.

   (a) Mechanical Sleeve Seals: Modular mechanical type, consisting of interlocking synthetic rubber links shaped to continuously fill annular space between pipe and sleeve, connected with bolts and pressure plates which cause rubber sealing elements to expand when tightened, providing watertight seal and electrical insulation.

   (b) Manufacturer: Provide mechanical sleeve seals of Thunderline Corp., “Link Seal” , Metra Seal by Metraflex or equal.

D. Pipe Rollers and Appurtenances:

1. Pipe Rollers shall be Anvil International Figure 171, Carpenter and Paterson Figure 142 or equal w/ hot-dipped galvanized finish.

2. Furnish with hot-dipped galvanized finish.

3. Support the rolls with hot-dipped galvanized continuous 1” threaded rod.

4. Furnish 24” long standard galvanized 12 GA. protection shield centered at each roller top and bottom. Strap to pipe with (2) stainless steel bands.

5. All incidental hardware: nuts, bolts and washers shall be American Standard pattern, hot dipped galvanized and matched with rollers and appurtenances.

PART 3: EXECUTION

A. PIPE SLEEVE:

Correct location and installation of pipe sleeves in the abutments is critical to a successful pipeline installation. Verify precise locations of all sleeves in the forms, prior to casting them in concrete. Assure that they are secure in the forms so as to remain in their intended locations during the casting process.

B. PIPE INSTALLATION:

1. Install pre-insulated potable water main in the locations shown on the drawings, using the required materials, hardware and manufacturer's recommended techniques.

2. Adjust elevation of pipes using the vertical adjustment available in the suspension of the pipe rollers to assure a uniform grade that closely matches that of the bridge, and is free of sags and humps. Assure that pipe rollers are level, side to side and adjust as needed. Flame cutting of galvanized parts will not be permitted because of the collateral damage to the galvanizing.

3. At the completion of the work, repair any damage to galvanized coatings of suspension beams, rods and rollers using approved high-zinc repair paint.

C. RUBBER SEALS:

After all adjustments of alignment are complete, install linked rubber seals in the annular spaces where the pipelines pass through both the near and far faces of all abutments.

END OF SECTION

SECTION 02594 - PRESSURE AND LEAKAGE TESTS OF DI/PVC WATER MAINS

PART 1: GENERAL

1.1 SCOPE:

Furnish all labor, materials, equipment, gages and related items necessary to complete all pressure and leakage tests of all ductile iron (DI) water mains.

PART 2: PRODUCTS

2.1 MATERIALS:

Materials shall be at CONTRACTOR'S option.

PART 3: EXECUTION

3.1 PRESSURE AND LEAKAGE TESTS:

A After the pipe has been laid and backfilled, it shall be pressure tested and tested for leakage in the presence of the ENGINEER and/or the OWNER.

B. All tests shall be conducted at a time and in a manner to minimize as much as possible any interference with the operation of the existing water system. The OWNER will supply all water necessary for testing and placing the lines in service. The CONTRACTOR shall supply all labor, materials and equipment necessary to make any necessary connections to the water system and to carry out the tests.

C. The CONTRACTOR shall excavate and provide a corporation tap for pressure and leak testing as directed by the ENGINEER. The CONTRACTOR is responsible for all work associated with the excavation, including proper trench protection, barricades, traffic control and proper backfilling and compaction upon successful completion of the test.

D. The pipe shall be slowly filled with water and all air expelled from the pipe. If permanent air vents are not located at all high points, CONTRACTOR shall install corporation stops at such high points to bleed off air as the line is filled with water.

E. A pressure test pump will be connected to the new main at the testing point. The pressure will be slowly increased to 150 psi and allowed to stabilize (+/-2.5 psi) for a minimum of 15 minutes.

F. A reservoir of potable water shall be connected to the test pump and the initial level of water recorded.

G. The pump pressure shall be maintained at 150 psi for one hour with all make up water withdrawn from the reservoir.

H. After one hour, the water level in the reservoir will be measured and the volume of water drawn from the reservoir calculated and compared with the following allowable leakage:

$$\text{Allowable Leakage (gph)} = \frac{\text{Pipe Length (feet)} \times \text{Nominal Diameter (inches)}}{10{,}876^{*}}$$

*Correct only for 150 psi test pressure

I. If any test discloses leakage greater than that specified above, the CONTRACTOR shall, at his own expense, locate and make repairs as necessary until the leakage is within the specified allowance.

J. Final acceptance of the lines will not occur until satisfactory tests have been passed.

END OF SECTION

SECTION 02595 - DISINFECTION OF WATER MAINS

PART 1: GENERAL

1.1 SCOPE

A. Furnish all labor, materials, equipment, and incidentals necessary to disinfect the distribution system.

B. Do not disinfect water mains until all testing required by Section 02594 has been satisfactorily completed.

PART 2: PRODUCTS

MATERIALS:

A. The CONTRACTOR shall chlorinate the new main in accordance with the continuous feed method specified in Section 5.2 of AWWA Standard C651-latest revision, using 5% to 15% sodium hypochlorite solution.

B. The CONTRACTOR may use calcium hypochlorite granules or tablets placed in the new mains during installation in accordance with Section 5.1 of AWWA Standard C651-latest revision, as a supplement to the continuous feed method.

PART 3: EXECUTION

3.1 DISINFECTION:

Upon satisfactory completion of the pressure and leak test, all new water mains shall be disinfected before they are placed into service in accordance with Section 5.2 of AWWA Standard C651-latest revision and the procedures specified herein.

3.2 FLUSHING:

A. Section of pipe to be disinfected shall first be flushed to remove any solids or contaminated material that may have become lodged in the pipe. If no hydrant is installed at the end of the main, then a suitably sized tap should be provided.

B. All taps required by the CONTRACTOR for chlorination or flushing purposes, or for temporary release of air, shall be provided by him as part of the construction of the water main.

C. Flushing shall proceed for 4 hours at a flow velocity of 2.5 feet per second.

3.3 REQUIREMENTS OF CHLORINE:

Before being placed into service, the main shall be chlorinated so that a chlorine residual of not less than 10 parts per million remains in the water after standing 24 hours in the pipe. Chlorine residual at start of test shall be at least 50 parts per million.

3.4 POINT OF APPLICATION:

The preferred point of application of the chlorinating agent is at the beginning of the pipeline or any valved section of it and through a corporation stop inserted in the pipe. The water injector for delivering the chlorine solution water into the pipe should be supplied from a tap made on the pressure side of the gate valve controlling the flow into the pipeline extension. Alternate points of application may be used when accepted or directed by the ENGINEER.

3.5 RATE OF APPLICATION:

Water from the distribution system or other source of supply as accepted by the ENGINEER, shall be controlled to flow very slowly into the newly laid pipeline during application of the chlorine. The rate of chlorine mixture flow shall be in such proportion to the rate of water entering the newly laid pipe that the dosage applied to the water will be sufficient at achieve at least 50 parts per million unless otherwise directed by the ENGINEER.

3.6 PREVENTING REVERSE FLOW:

Valves shall be operated by the OWNER so that the strong chlorine solution in the line being treated will not flow back into the line supplying the water. Check valves may be used, if desired.

3.7 RETENTION PERIOD:

Treated water shall be retained in the pipe at least 24 hours. After this period, the chlorine residual at pipe extremities and at other representative points shall be at least 10 parts per million.

3.8 CHLORINATING VALVES AND HYDRANTS:

In the process of chlorinating newly laid pipe, all valves or other appurtenances shall be operated while the pipeline is filled with the chlorinating agent and under normal operating pressure.

3.9 FINAL FLUSHING AND TESTING:

A. Following chlorination, all treated water shall be thoroughly flushed from the newly laid pipe at its extremity until the replacement water throughout its

length shows, upon tests, that the residual chlorine is not in excess of that to be carried in the system.

B. After flushing, water samples collected from the treated piping system as directed by the ENGINEER shall show satisfactory bacteriological results. Bacteriological analyses shall be performed by the OWNER.

C. Chlorine residual of water being flushed from the newly laid pipe following chlorination must be neutralized by treating with one of the chemicals listed in the table below.

AMOUNTS OF CHEMICALS REQUIRED TO NEUTRALIZE VARIOUS RESIDUAL CHLORINE CONCENTRATIONS IN 100,000 GALLONS OF WATER*

Residual Chlorine Concentration (mg/l)	Sulphur Dioxide	Sodium Bisulfate	Sodium Sulfite	Sodium Thiosulfate
1	0.8	1.2	1.4	1.2
2	1.7	2.5	2.9	2.4
10	8.3	12.5	14.6	12.0
50	41.7	62.6	73.0	60.0

*Except for residual chlorine concentration, all amounts are in pounds.

3.10 REPETITION OF FLUSHING AND RESULTS:

Should the initial disinfection process result in an unsatisfactory bacterial test, the original chlorination procedure shall be repeated by the CONTRACTOR until satisfactory results are obtained.

END OF SECTION

BOLTS AND NUTS

GENERAL SPECIFICATIONS

General Description of Properties Required:

1.0 Stainless Steel: Type 304 – contains the addition of Molybdenum to the nickel-chromium steels.

2.0 High Strength/Low Alloy Steel: Trade name for cold formed T-head bolts containing alloying elements such as copper, nickel, and chrome (Cor-Ten).

CAST IRON OR DUCTILE IRON SPLIT REPAIR SLEEVE

GENERAL SPECIFICATIONS

1.0 Split repair sleeve shall be mechanical joint.

2.0 The side rubber gaskets shall be rectangular to cross-section and shall fit into grooved channels in the casting. These gaskets shall extend the entire length of the sleeve.

3.0 Split repair sleeve shall be AB-CD pattern to permit use of plain rubber and duck-tipped gaskets for various O.D. piping sizes.

4.0 Mechanical joint with accessories furnished; glands, gaskets and Cor-Ten T-bolts and nuts or equal.

5.0 All side bolts shall be Stainless Steel (Type 304) or silicone bronze.

6.0 Interior and exterior to be bituminous coated with a minimum of 4 mils D.F.T.

7.0 The sleeve shall be provided with a 2” F.I.P.T. test port with brass plug.

APPROVED MANUFACTURERS

A. All Manufacturers

CORPORATION STOPS

GENERAL SPECIFICATIONS

1.0 Conforming to AWWA C-800.

2.0 ¾” to 2” curb stops shall be ball valve design with brass ball that is teflon coated or brass ball with teflon seats.

3.0 The ball shall be supported by seats which are water tight in either direction.

4.0 The valve shall have a full port opening.

5.0 The body of the corporation stop shall be of heavy duty design.

6.0 The valve working pressure shall be 300 p.s.i.

APPROVED MANUFACTURERS

A. A.Y. McDonald
B. Cambridge Brass
C. Ford Meter Box Co.
D. Mueller Co.

CURB STOPS

GENERAL SPECIFICATIONS

1.0 Conforming to AWWA C-800

2.0 ¾” to 2” curb stops shall be ball valve design with brass ball that is teflon coated or brass ball with teflon seats.

3.0 The ball shall be supported by seats which are water tight in either direction.

4.0 The valve shall have a full-port opening.

5.0 The valve shall open with ¼ turn (90°) with a check or stop.

6.0 The valve shall not have a drain.

7.0 The valve stem shall have 2 “O” rings and a bronze ring lock which holds the stem solidly in the valve body.

8.0 The valve body shall be of heavy duty design.

9.0 The valve working pressure shall be 300 p.s.i.

APPROVED MANUFACTURERS

A. A.Y. McDonald
B. Cambridge Brass
C. Ford Meter Box Co.
D. Mueller Co.

CUT-IN SLEEVE

GENERAL SPECIFICATIONS

1.0 The sleeve shall be mechanical joint to plain-end type.

2.0 The sleeve shall fit over either AB or CD pattern pipe.

3.0 Coatings:
   a) Interior – Seal-coated – AWWA C104-74, min. 4 mils D.F.T.
   b) Exterior – Bituminous coated min. 4 mils D.F.T.

4.0 Mechanical joint accessories shall be furnished:
   a) Glands: Duck-tipped for AB pipe, Plain Gaskets for CD pipe
   b) Cor-Ten tee bolts and nuts

5.0 Cut-in sleeves shall have at least one stop-screw in sizes up through 10” and at least 2 stop-screws in 12” size.

6.0 The stop-screw “O” ring shall be recessed into the body of the sleeve between stop-screw and body.

APPROVED MANUFACTURERS

A. Mueller Co.

DUCTILE IRON FITTINGS

INCLUDING BENDS, REDUCERS, OFF-SETS, TEES AND SLEEVES

GENERAL SPECIFICATIONS

7.0 Material shall be ASTM A536 latest, grade 70-50-05, in accordance with AWWA C110 (latest revision) for fittings larger than 24" and C153 (latest revision) for fittings 3" thru 24".

8.0 Fittings shall be cement lined AWWA C104 (latest revision) or fusion bonded epoxy coated with a 5 mil nominal thickness per AWWA C550 and C116.

9.0 Interior seal coated AWWA C104 with minimum of 4 mils dry film thickness.

10.0 Exterior bituminous coated, 4 mils minimum dry film thickness or fusion bonded epoxy coated with a 5 mil nominal thickness per AWWA C550 and C116.

11.0 Sleeves shall not be cement lined, but shall be bituminous coated inside to 4 mils dry film thickness. All sleeves shall be long body type.

12.0 Mechanical joint with accessories furnished: D.I. glands, gaskets, Cor-Ten T-bolts and nuts.

13.0 Pressure Ratings:
a) Class 350 pressure rating in accordance with AWWA C153 - 3"-24" sizes.
b) Class 250 pressure rating in accordance with AWWA C110 - 30"-48" sizes.

14.0 The "compact design" fittings must provide adequate space for the MJ joint and accessories to be installed without special tools (i.e. Lowell wrench can be used).

APPROVED MANUFACTURERS

A. All Manufacturers

DUCTILE IRON PIPE

GENERAL SPECIFICATIONS

1.0 Ductile iron pipe shall meet requirements of AWWA Standard C-151 (latest revision) and be cement lined and seal coated to meet AWWA Standard C-104 (latest revision).

2.0 Joints shall meet requirements of AWWA C-111 (latest revision).

3.0 Interior seal coated, bituminous paint oil cut, emulsion not acceptable, thickness minimum of 2 mils dry film thickness.

4.0 Exterior bituminous coated with minimum of 2 mils dry film thickness.

5.0 Class 52 wall thickness, 4-inch diameter through 12-inch diameter inclusive.

6.0 Ductile Iron Pipe with diameters 16-inches and larger shall be approved by PWD.

7.0 State nominal laying length and mark shorter lengths near bell.

8.0 Mechanical joint pipe to be furnished with gland, gaskets and Cor-Ten bolts and nuts.

APPROVED MANUFACTURERS

A. American Cast Iron Pipe
B. Griffin Pipe
C. U.S. Pipe
D. Clow Pipe
E. McWain Pipe
F. Atlantic States Pipe

FIRE HYDRANT

GENERAL SPECIFICATIONS

1.0 The hydrant shall open right.

2.0 The operating nut shall:
- a) be D.I. or bronze
- b) be pentagon in shape with dimensions: Top 1-13/16" tapering to 1-7/8" on bottom.

3.0 Nozzles shall be:
- a) 2 each – 2-1/2” National Standard Thread
- b) 1 each – 4-1/2” National Standard Thread.

4.0 Port covers shall be supplied without chains and shall have the same size pentagon operator as specified in 3.0(b) above.

5.0 Traffic model hydrant with breakaway feature

6.0 Barrel length(s) shall be:
- a) 6 ft. cover, 6-1/2 ft. bury; or
- b) 5-1/2 ft. cover, 6 ft. bury, or
- c) 5 ft. cover, 5’-6” bury

7.0 Hydrant shoe or base shall have the following:
- a) 6" MJ inlet;
- b) 5-1/4" valve opening with non-draining bronze seat that is permanently plugged;
- c) valve seat and sub-seat arrangement shall be bronze to bronze;
- d) Horizontal and vertical blocking planes manufactured into hydrant base

8.0 Bolts:
- a) all buried mechanical joint bolts and nuts (T-head, etc.) shall be Cor-Ten or equal;
- b) all buried flange joint bolts shall be stainless steel (Type 304) or silicone bronze.

9.0 Protective Coatings shall consist of the following:
- a) all paintings and coatings shall be a minimum of 3 mils total dry film thickness, unless noted
- b) the internal area of the hydrant base, which is normally exposed to water and which includes the internal body of hydrant shoes, including lower valve plate, shall be epoxy coated

c) all internal and external cast iron or ductile iron components shall be coated with an approved bituminous coating, 3 mils minimum
d) Coatings for upper barrel - exterior:
   1. Surface preparation blast clean SSPC-SP-6
   2. Primer Sherwin Williams Red Oxide E61RC21, 1.5 mils, dry
   3. Finish coat Sherwin Williams – Regal Yellow, F78Y30, 1.5 mils, dry or sufficient paint to hide the second coat
   4. Total dry film thickness - 3 mils minimum.
e) Coatings for bonnet, operating nut, port cap:
   1. Surface preparation: Blast clean, SSPC-SP-6
   2. Exterior primer
   3. Exterior aluminum
   4. Total dry film thickness: 3 mils minimum.

10.0 Flow Indicator Collars: PWD personnel shall install flow indicator collars on all new hydrants.

FIELD TEST OF INSTALLED HYDRANT

1.0 Hydrant flow shall completely stop with no more than 200 ft. lb. of torque applied to the operating nut.

2.0 Failure to shut completely at no more than 200 ft. lb. of torque will be cause for rejection of that hydrant.

APPROVED HYDRANTS

A. Clow Eddy – with lower stern machined from bar stock
B. American Darling Models: B62B-1, B62B-5

PIPE JOINT RESTRAINER

GENERAL SPECIFICATIONS

1.0 Pipe Restraints:

1.1 Use in conjunction with mechanical joint fittings.

1.2 The joint restraint ring and its wedging components shall be made of ductile iron conforming to ASTM A536-80.

1.3 Dimensions of the restrainer must allow use with standard M.J. bell conforming to AWWA C111 and AWWA C153.

1.4 Restrainer must restrain up to 350 psi of working pressure in 3” to 16“ sizes and 250 psi of working pressure in 18” to 48” sizes with a 2:1 safety factor.

1.5 Torque limiting twist off nuts shall be used to ensure proper actuation of the restraining wedges (used on a,b,c below).

APPROVED MANUFACTURERS

A. Sigma Super Lug
B. Ford Uni-Flange Series 1400
C. Ebba Mega Lug
D. Romac Grip Ring
E. Star Grip Series 300
F. Romac Romagrip
G. MJ FIELD LOK Gasket

POLYETHYLENE ENCASEMENT

GENERAL SPECIFICATIONS

1.0 Tube type polyethylene encasement shall be installed on all ductile iron pipe and fittings in accordance with AWWA Standard C105 - latest revision, Method A.

2.0 Polyethylene encasement shall be either linear low-density polyethylene (LLDPE) film with a minimum thickness of 8-mil or high-density, cross-laminated polyethylene (HDCLPE) film with a minimum thickness of 4-mil.

3.0 Circumferential wraps of tape or plastic tie straps shall be placed at 2-ft. intervals along the barrel of the pipe.

4.0 The polyethylene encasement shall prevent contact between the pipe and the surrounding backfill and bedding material but is not intended to be a completely airtight or watertight enclosure. All lumps of clay, mud, cinders, and so forth, on the pipe surface shall be removed prior to installation of the polyethylene encasement. During installation, care shall be exercised to prevent soil or embankment material from becoming trapped between the pipe and the polyethylene.

5.0 The polyethylene film shall be fitted to the contour of the pipe to effect a snug, but not tight, encasement with minimum space between the polyethylene and the pipe. Sufficient slack shall be provided in contouring to prevent stretching the polyethylene where it bridges irregular surfaces, such as bell-spigot interfaces, bolted joints, or fittings, and to prevent damage to the polyethylene due to backfilling operations. Overlaps and ends shall be secured with adhesive tape, string, plastic tie straps, or any other material capable of holding the polyethylene encasement in place until backfilling operations are complete.

6.0 Three layers of polyethylene adhesive tape shall be wrapped around any polywrapped pipe where a tapping machine will be placed. All copper services connected to a pipe wrapped in polyethylene encasement shall be wrapped within three feet of the pipe.

RESILIENT SEAT GATE VALVE

GENERAL SPECIFICATIONS

1.0 Valve shall meet the latest revision of the AWWA C-509 Standard.

2.0 Valve shall have a smooth unobstructed water way which shall be a minimum diameter of the valve.

3.0 Valve ends to be specified and shall be furnished with Cor-ten (or equal) bolts and nuts.

4.0 Valve shall be rated for zero leak rate at 200 psi differential working pressure and have a 400 psi hydrostatic test for structural integrity.

5.0 Sealing - Valve shall have a minimum of 2 “O” rings situated such that the “O” rings above the thrust collar can be replaced with the valve under pressure and in the open position.

6.0 Stem - Valve stem shall:
- a) open right with a stem nut made of grade D, E manganese bronze;
- b) be non-rising;
- c) be designed with a thrust collar integrally cast to the stem;
- d) be designed with two (2) thrust washers, placed one above and one below the stem thrust collar;
- e) be constructed of grade D,E manganese bronze;
- f) be such that the thrust washers are made of a synthetic polymer with physical properties required.

7.0 Valve Body - The body, including the stuffing box and the bonnet, shall be constructed of cast iron or ductile iron, meeting the latest revision of AWWA C-153.

8.0 Valve Wedge:
- a) shall be constructed of ductile iron (less guiding mechanism);
- b) shall be fully encapsulated and permanently bonded with a resilient elastomer;
- c) shall be constructed such to allow the flushing of any interior exposed surface during operations.

9.0 Coatings:
- a) the internal and external valve body, including the stuffing box, bonnet, and interior of the wedge shall be fusion bonded epoxy coated with 8 mils D.F.T.

b) interior shall meet latest version of AWWA C-550.
c) shall be holiday free, interior and exterior, per testing method described in AWWA C-550, Sec. 5.1.

10.0 Operating Nut:
a) shall be two (2) inch square ductile iron:
1. with a countersunk hold down nut (made of 316 stainless steel or silicone bronze). This applies to stems that are tapered; or
2. with a stainless steel pin inserted thru the stem. This applies to stems of full diameter.

11.0 Bolts – The seal plate and bonnet bolts shall be stainless steel (Type 316 or Type 304).

12.0 Valves 12” nominal diameter and smaller shall be directly operated by the nut on the valve stem and mounted vertically. Number of turns to open or close shall closely match the formula: (3 x D) + 2. For example, a 12” valve should open or close with approximately (3 x 12) + 2 = 38 turns of the operating nut.

13.0 Valves larger than 12” nominal diameter shall be designed to be installed horizontally and shall have bevel gear operators driven by the operating nut. Valves 14” – 24” nominal diameter shall have 4:1 bevel gear operators. Valves with 30” – 36” nominal diameters shall have 6:1 bevel gear operators and valves with 42” – 48” nominal diameters shall have 8:1 bevel gear operators. Number of turns to open or close shall closely match the formula: ((3 x D) + 2) times the bevel gear ratio. For example, a 24” valve should open or close with approximately ((3 x 24) + 2) x 4 = 296 turns of the operating nut.

GENERAL PROVISIONS

1.0 Vendor shall identify any and all exceptions to the specifications.

2.0 Vendor shall provide standard brochures for item quoted.

3.0 Vendor may be required to supply a valve for inspection and determination of coating process.

APPROVED RESILIENT SEATED GATE VALVES

A. U.S.P.
B. AFC Series 2500
C. Mueller A-2360/61
D. Clow Series F6100

INSERTION GATE VALVE

GENERAL SPECIFICATIONS

1.0 Valve shall meet the latest revision of the AWWA C-509 Standard.

2.0 Valve shall have a smooth unobstructed water way which shall be a minimum diameter of the valve.

3.0 Valve ends to be specified and shall be furnished with Cor-ten (or equal) bolts and nuts.

4.0 Valve shall be rated for 250 psi differential working pressure.

5.0 Valve Body - The body, including the stuffing box and the bonnet, shall be constructed ductile iron, meeting the latest revision of AWWA C-153.

6.0 The milled slot in the pipe wall shall be less than 2” wide.

7.0 Coatings:
- a) the internal and external valve body, including the stuffing box, bonnet, and interior of the wedge shall be fusion bonded epoxy coated with 8 mils D.F.T.
- b) interior shall meet latest version of AWWA C-550.

8.0 Bolts – The seal plate and bonnet bolts shall be stainless steel (Type 316 or Type 304).

APPROVED INSERTION VALVE:

A. EZ Valve by Advanced Valve Technologies

RESTRAINED JOINT GASKETS

GENERAL SPECIFICATIONS

1.0 All accepted restrained joint gaskets in the Portland Water District distribution system shall be rated in accordance with the performance requirements of ANSI/AWWA C111/A21.11.

2.0 Required Applications

2.1 Any hydrant branch or service with a distance greater than 18’ shall have an approved restrained joint gasket in the bell ends.

2.2 Where a casing is required, all joints within the casing shall have an approved restrained joint gasket unless restrained joint pipe is used.

2.3 At any time as required by a PWD ENGINEER.

2.4 Any live service tap where there is a joint between the connection and the end of the service.

APPROVED MANUFACTURERS

A. American Fast-Grip Gasket – American Pipe
B. Field Lok 350 Gasket – US Pipe

GENERAL SPECIFICATIONS

Reference Standard Details

1.0 Service Box - Approved Manufacturers: Laroche, Clow Canada, Bibby

1.1 Shall be 1.0” Schedule 40 steel pipe with top having 1.0” N.P.T. pipe threads for screw-on cover or coupling.

1.2 Shall be Erie style with 6’ slide-type riser.

1.3 Any extension of a service box requires a threaded merchant coupling with no set screw.

2.0 Service Box Cover – Approved Manufacturers: Bibby, Laroche, Clow Canada, QWP

2.1 Shall be Quincy type (heavy duty) cover that screws on Service Box (1.1 above).

2.2 Shall be tapped with a 1” rope thread with a solid brass plug with pentagon operating head.

3.0 Service Box Foot Piece – Approved Manufacturer: Laroche

3.1 The standard foot piece shall be heavy duty (Ford style or equal) cast iron design.

3.2 The large, heavy-duty foot piece shall have an arch that will fit over 2” ball-valve curb stops.

4.0 Service Rod – Approved Manufacturer: North American Manufacture

4.1 Shall have a self aligning design.
a) 36” length for all services.
b) 24” length for air valves.

4.2 Shall be round and constructed of stainless steel (304) with an epoxy coating (minimum 4 mil D.F.T.).

4.3 Shall have a yoke design that is an integral part of the rod.

4.4 The curb-stop attachment pin shall be a brass cotter pin.

4.5 The rod “wrench-flat” shall have a minimum thickness of ¼” tapered to 1/16” and width of 5/8” or ½”.

4.6 Diameter

a) ½”, ¾” and 1” services use ½” diameter.
b) 1 ½” and 2” services use 5/8” diameter.

SERVICE SADDLES

GENERAL SPECIFICATIONS FOR DUCTILE IRON PIPE

1.0 The service saddle shall have the “larger sized” body, the same as associated with the “service repair” saddle, which shall have a minimum diameter of 6 in. and multiple “O” ring type sealing.

2.0 The saddle body shall be constructed of epoxy coated ductile iron.

3.0 The sealing gasket(s) shall be either Buna-N rubber or SBR rubber (ASTM D2000).

4.0 Service saddles shall be installed with all 1 1/2” and 2” corporation stops (cc only).

Approved Manufacturers

Size	Tap	Saddle
2” – 2-1/4”	¾”, 1” cc	Smith-Blair 315, Ford FC 202
4” - 12” D.I.	¾”- 11/2” cc	Smith Blair 331
4” - 12” D.I.	2” cc	Smith-Blair 313
16”	¾”-2” cc	Smith-Blair 313
20” – 36”	¾”-2”cc	Smith-Blair 366

GENERAL SPECIFICATIONS FOR PVC PIPE

1.0 Stainless steel straps will be used on saddles on C-900 PVC Pipe

Approved Manufacturers

Size	Tap	Saddle
2” – 2-1/4”	¾”, 1” cc	Smith-Blair 315, Ford FC 202
4”-12”		Smith-Blair 265

GENERAL SPECIFICATIONS FOR HDPE PIPE

1.0 Spring washers are required for service saddles on HDPE Pipe.

Approved Manufacturer

Size	Tap	Saddle
4”-12”		Smith-Blair 265

STAINLESS STEEL REPAIR CLAMPS

GENERAL SPECIFICATIONS

1.0 The sleeve shall be of full circle design; either one piece or two pieces, for pipe sizes 2” thru 12”.

2.0 Body: Shall be 18-8 stainless steel shell.

3.0 Gasket:
- a) Shall be full length and diameter of the body size;
- b) This gasket shall form a multiple O-ring, or grid, sealing barrier for the entire length and circumference;
- c) Shall be virgin SBR rubber (ASTM D2000 AA 415).

4.0 Lugs, sidebar, and lifting bar shall be heavy gauge 18-8 stainless steel with TIG/MIG welding and chemical passivation of all welds.

5.0 Bolts and Nuts shall be Teflon coated 18-8 heavy gauge stainless steel.

6.0 Armor: The armor or bridging plate between the side bars shall be heavy gauge 18-8 stainless steel bonded to the gasket to bridge the lug area.

APPROVED MANUFACTURERS

A. All Manufacturers

TAPPING SLEEVES

GENERAL SPECIFICATIONS

1.0 For sizes 12” and smaller tapping sleeve shall be ductile iron or approved fabricated steel:

1.1 Tapping sleeve shall be mechanical joint with recessed outlet flange for tapping valve.

1.2 Tapping sleeve shall conform to AWWA C-207, Class D, with rated maximum working pressure of 200 psi.

1.3 The side rubber gaskets shall be rectangular in cross-section and fit into grooved channels in the casting. These gaskets shall extend the entire length of the sleeve and shall not require cutting or trimming to match MJ end gaskets.

1.4 Tapping sleeve shall be AB-CD pattern to permit use of plain rubber and duck-tipped gaskets for various O.D. piping sizes.

1.5 Mechanical joint with accessories furnished; glands, gaskets, and Cor-Ten T-bolts and nuts or equal.

1.6 All flange outlet bolts shall be stainless steel (Type 304).

1.7 Interior and exterior to be bituminous coated with a minimum of 4 mils dry film thickness or fusion bonded epoxy coated.

1.8 The sleeve shall be provided with a ¾” F.I.P.T. test port and brass lug.

2.0 For sizes 16” and larger tapping sleeve shall be fabricated steel:

2.1 Body and Flange - A-36

2.2 Coating - Fusion-bonded epoxy coating with minimum D.F.T. of 5 mils, inside and out.

2.3 Bolts, Nuts - Stainless Steel (Type 304).

2.4 Gaskets - SBR.

2.5 Flange - AWWA Class D plate flange with ANSI 150# drilling, proper recessing for tapping valves.

2.6 Sleeves shall be provided with 3/4" F.I.P.T. test port and plug.

APPROVED MANUFACTURERS (4”-12”)

A. AFC
B. Mueller Co.
C. U.S. Pipe
D. Tyler / Union
E. Powerseal Model 3490 and 3490MJ (Fabricated Steel)

APPROVED MANUFACTURERS (16” and larger)

A. Romac FTS 420
B. Ford FTSC
C. Smith Blair 622
D. JCM 412
E. Powerseal Model 3490 and 3490 MJ (up to 24”)
F. JCM 415 or approved equal (for RCCP pipe only)

GENERAL SPECIFICATIONS

Reference Standard Details

1.0 The valve box bottom section shall be slide-type with bell-type base with bottom lip.
Manufacturer: North American Manufacture

2.0 The valve box top section shall be slide-type, 36 inches long (minimum). No top flange and no “bead” or bottom flange.
Manufacturer: North American Manufacture

3.0 The valve box cover shall be a 2” drop-type cover to fit the 7-1/4” opening of the top section.
Manufacturer: Bibby St-Croix (no substitute)

4.0 The valve box intermediate (mid) section shall be slide-type with a minimum 3” belled bottom. Base section No. 645 may be used as an alternate.
Manufacturer: North American Manufacture

5.0 Material shall be cast iron or ductile iron free from defects.

6.0 Interior and exterior of all components shall be bituminous coated with a minimum of 4 mils dry film thickness.

END OF SECTION

March 25, 2014
Supersedes October 29, 2013

STANDARD DETAIL UPDATES

Standard Details and Standard Detail updates are available at:
http://www.maine.gov/mdot/contractor-consultant-information/ss_standard_details_updates.php

Detail #	Description	Revision Date
203(03)	Backslope Rounding	1/29/08
502(03)	Concrete Curb - Bituminous Wearing Surface	8/08/11
502(03)A	Concrete Curb - Concrete Wearing Surface	2/2/09
502(07)	Precast Concrete Deck Panels - Layout Plan	2/2/09
502(07)A	Precast Concrete Deck Panels - Layout Plan	2/2/09
502(08)	Precast Concrete Deck Panels - Panel Plan	2/2/09
502(09)	Precast Concrete Deck Panels - Blocking Detail	2/2/09
502(10)	Precast Concrete Deck Panels	2/2/09
502(11)	Precast Concrete Deck Panels	2/2/09
502(12)	Precast Concrete Deck Panels - Notes	10/28/09
502(12)A	Precast Concrete Deck Panels - Notes	2/2/09
504(15)	Diaphragms	5/19/11
504(21)	Tension Flange Connection for Diaphragm and Cross Frames	10-11-12
504(22)	Diaphragm & Crossframe Notes	10/11/12
504(23)	Hand-Hold Details	12/08/05
502(24)	Hand-Hold Details	10/11/12
507(04)	Steel Bridge Railing	2/05/03
507(04A)	Steel Bridge Railing	7/3/13
507(09)	Steel Bridge Railing	5/19/11
507(09)A	Steel Bridge Railing	5/19/11

526(06)	Permanent Concrete Barrier	2/2/09
526(08)	Permanent Concrete Barrier – Type IIIA	10/07/10
526(08)A	Permanent Concrete Barrier – Type IIIA	12/07/10
526(13)	Permanent Concrete Barrier – Type IIIB	2/2/09
526(14)	Permanent Concrete Barrier – Type IIIB	2/2/09
526(21)	Concrete Transition Barrier	2/2/09
526(29A)	Concrete Transition Barrier	5/1/13
526(29B)	Concrete Transition Barrier	5/1/13
526(29C)	Concrete Transition Barrier	5/1/13
526(33)	Concrete Transition Barrier	5/1/13
526(39)	Texas Classic Rail – Between Window	2/2/09
526(40)	Texas Classic Rail – Through Window	2/2/09
526(41)	Texas Classic Rail – Through Post	2/2/09
526(42)	Texas Classic Rail – Through Nose	2/2/09
535(01)	Precast Superstructure - Shear Key	10/12/06
535(02)	Precast Superstructure - Curb Key & Drip Notch	5/20/08
535(03)	Precast Superstructure - Shear Key	12/5/07
535(04)	Precast Superstructure - Shear Key	12/05/07
535(05)	Precast Superstructure - Post Tensioning	5/20/08
535(06)	Precast Superstructure - Sections	10/12/06
535(07)	Precast Superstructure - Precast Slab & Box	10/12/06
535(08)	Precast Superstructure - Sections	10/12/06
535(09)	Precast Superstructure - Sections	10/12/06
535(10)	Precast Superstructure - Sections	10/12/06
535(11)	Precast Superstructure - Sections	10/12/06

535(12)	Precast Superstructure - Sections	10/12/06
535(13)	Precast Superstructure - Sections	10/12/06
535(14)	Precast Superstructure - Stirrups	10/12/06
535(15)	Precast Superstructure - Plan	10/12/06
535(16)	Precast Superstructure - Reinforcing	10/12/06
535(17)	Precast Superstructure - Notes	12/05/07
604(01)	Catch Basins	11/16/05
604(05)	Type “A” & “B” Catch Basin Tops	11/16/05
604(06)	Type “C” Catch Basin Tops	11/16/05
604(07)	Manhole Top “D”	11/16/05
604(09)	Catch Basin Type “E”	11/16/05
604(18)	Utility Structures	03/18/14
606(02)	Multiple Mailbox Support	11/16/05
606(03)	Guardrail Standard Detail	9/19/12
606(07)	Reflectorized Beam Guardrail Delineator Details	11/16/05
606(20)	Guardrail - Type 3 - Single Rail - Bridge Mounted	2/2/09
606(21)	Guardrail - Type 3 - Single Rail - Bridge Mounted	2/2/09
606(22)	Guardrail - Type 3 - Single Rail - Bridge Mounted	2/2/09
606(23)	Guardrail - Type 3 - Single Rail - Bridge Mounted	2/2/09
609(03)	Curb Type 3	6/27/06
609(06)	Vertical Bridge Curb	2/12/09
609(07)	Curb Type 1	6/27/06
609(08)	Precast Concrete Transition Curb	2/2/09

610(02)	Stone Scour Protection	8/9/11
610(03)	Stone Scour Protection	5/19/11
610(04)	Stone Scour Protection	5/19/11
620(05)	Geotextile Placement for Protection of Slopes Adjacent to Stream & Tidal Areas	5/19/11
626(09)	Electrical Junction Box for Traffic Signals and Lighting	8/27/10
645(06)	H-Beam Posts – Highway Signing	7/21/04
645(09)	Installation of Type II Signs	7/21/04
801(01)	Drives on Sidewalk Sections	12/13/07
801(02)	Drives on Non-Sidewalk Sections	12/13/07

SUPPLEMENTAL SPECIFICATION

(Corrections, Additions, & Revisions to Standard Specifications - Revision of December 2002)

SECTION 101
CONTRACT INTERPRETATION

101.2 Definitions

Closeout Documentation Replace the sentence "A letter stating the amount….. DBE goals." with "DBE Goal Attainment Verification Form"

Add "Environmental Information Hazardous waste assessments, dredge material test results, boring logs, geophysical studies, and other records and reports of the environmental conditions. For a related provision, see Section 104.3.14 - Interpretation and Interpolation."

Add "Fabrication Engineer The Department's representative responsible for Quality Assurance of pre-fabricated products that are produced off-site."

Geotechnical Information Replace with the following: "Boring logs, soil reports, geotechnical design reports, ground penetrating radar evaluations, seismic refraction studies, and other records of subsurface conditions. For a related provision, see Section 104.3.14 - Interpretation and Interpolation."

SECTION 102
DELIVERY OF BIDS

102.7.1 Location and Time Add the following sentence "As a minimum, the Bidder will submit a Bid Package consisting of the Notice to Contractors, the completed Acknowledgement of Bid Amendments form, the completed Schedule of Items, 2 copies of the completed Agreement, Offer, & Award form, a Bid Bond or Bid Guarantee, and any other Certifications or Bid Requirements listed in the Bid Book."

102.11.1 Non-curable Bid Defects Replace E. with "E. The unit price and bid amount is not provided or a lump sum price is not provided or is illegible as determined by the Department."

SECTION 103
AWARD AND CONTRACTING

103.3.1 Notice and Information Gathering Change the first paragraph to read as follows: "After Bid Opening and as a condition for Award of a Contract, the Department may require an Apparent Successful Bidder to demonstrate to the Department's satisfaction that the Bidder is responsible and qualified to perform the Work."

SECTION 104
GENERAL RIGHTS AND RESPONSIBILITIES

104.3.14 Interpretation and Interpolation In the first sentence, change "…and Geotechnical Information." to "…Environmental Information, and Geotechnical Information."

SECTION 105
GENERAL SCOPE OF WORK

Delete the entire Section 105.6 and replace with the following:

105.6.1 Department Provided Services The Department will provide the Contractor with the description and coordinates of vertical and horizontal control points, set by the Department, within the Project Limits, for full construction Projects and other Projects where survey control is necessary. For Projects of 1,500 feet in length, or less: The Department will provide three points. For Projects between 1,500 and 5,000 feet in length: The Department will provide one set of two points at each end of the Project. For Projects in excess of 5,000 feet in length, the Department will provide one set of two points at each end of the Project, plus one additional set of two points for each mile of Project length. For non-full construction Projects and other Projects where survey control is not necessary, the Department will not set any control points and, therefore, will not provide description and coordinates of any control points. Upon request of the Contractor, the Department will provide the Department's survey data management software and Survey Manual to the Contractor, or its survey Subcontractor, for the exclusive use on the Department's Projects.

105.6.2 Contractor Provided Services Utilizing the survey information and points provided by the Department, described in Subsection 105.6.1, Department Provided Services, the Contractor shall provide all additional survey layout necessary to complete the Work. This may include, but not be limited to, reestablishing all points provided by the Department, establishing additional control points, running axis lines, providing layout and maintenance of all other lines, grades, or points, and survey quality control to ensure conformance with the Contract. The Contractor is also responsible for providing construction centerline, or close reference points, for all Utility Facilities relocations and adjustments as necessary to complete the Work. When the Work is to connect with existing Structures, the Contractor shall verify all dimensions before proceeding with the Work. The Contractor shall employ or retain competent engineering and/or surveying personnel to fulfill these responsibilities.

The Contractor must notify the Department of any errors or inconsistencies regarding the data and layout provided by the Department as provided by Section 104.3.3 - Duty to Notify Department If Ambiguities Discovered.

105.6.2.1 Survey Quality Control The Contractor is responsible for all construction survey quality control. Construction survey quality control is generally defined as, first, performing initial field survey layout of the Work and, second, performing an independent check of the initial layout using independent survey data to assure the accuracy of the initial layout; additional iterations of checks may be required if significant discrepancies are discovered in this process. Construction survey layout quality control also requires written documentation of the layout process such that the process can be followed and repeated, if necessary, by an independent survey crew.

105.6.3 Survey Quality Assurance It is the Department's prerogative to perform construction survey quality assurance. Construction survey quality assurance may, or may not, be performed by the Department. Construction survey quality assurance is generally defined as

an independent check of the construction survey quality control. The construction survey quality assurance process may involve physically checking the Contractor's construction survey layout using independent survey data, or may simply involve reviewing the construction survey quality control written documentation. If the Department elects to physically check the Contractor's survey layout, the Contractor's designated surveyor may be required to be present. The Department will provide a minimum notice of 48 hours to the Contractor, whenever possible, if the Contractor's designated surveyor's presence is required. Any errors discovered through the quality assurance process shall be corrected by the Contractor, at no additional cost to the Department.

105.6.4 Boundary Markers The Contractor shall preserve and protect from damage all monuments or other points that mark the boundaries of the Right-of-Way or abutting parcels that are outside the area that must be disturbed to perform the Work. The Contractor indemnifies and holds harmless the Department from all claims to reestablish the former location of all such monuments or points including claims arising from 14 MRSA § 7554-A. For a related provision, see Section 104.3.11 - Responsibility for Property of Others.

SECTION 106
QUALITY

106.4.3 Testing Change the first sentence in paragraph three from "…maintain records of all inspections and tests." to "…maintain original documentation of all inspections, tests, and calculations used to generate reports."

106.6 Acceptance Add the following to paragraph 1 of A: "This includes Sections 401 - Hot Mix Asphalt, 402 - Pavement Smoothness, and 502 - Structural Concrete - Method A - Air Content."

Add the following to the beginning of paragraph 3 of A: "For pay factors based on Quality Level Analysis, and"

106.7.1 Standard Deviation Method Add the following to F: "Note: In cases where the mean of the values is equal to either the USL or the LSL, then the PWL will be 50 regardless of the computed value of s."

Add the following to H: "Method C Hot Mix Asphalt: PF = [55 + (Quality Level *0.5)] * 0.01"

SECTION 107
TIME

107.3.1 General Add the following: "If a Holiday occurs on a Sunday, the following Monday shall be considered a Holiday. Sunday or Holiday work must be approved by the Department, except that the Contractor may work on Martin Luther King Day, President's Day, Patriot's Day, the Friday after Thanksgiving, and Columbus Day without the Department's approval."

107.7.2 Schedule of Liquidated Damages Replace the table of Liquidated Damages as follows:

From	Up to and	Amount of Liquidated

More Than	Including	Damages per Calendar Day
$0	$100,000	$225
$100,000	$250,000	$350
$250,000	$500,000	$475
$500,000	$1,000,000	$675
$1,000,000	$2,000,000	$900
$2,000,000	$4,000,000	$1,000
$4,000,000	and more	$2,100

SECTION 108
PAYMENT

Remove Section 108.4 and replace with the following:

"108.4 Payment for Materials Obtained and Stored Acting upon a request from the Contractor and accompanied by bills or receipted bills, the Department will pay for all or part of the value of acceptable, non-perishable Materials that are to be incorporated in the Work, including Materials that are to be incorporated into the Work, not delivered on the Work site, and stored at places acceptable to the Department. Examples of such Materials include steel piles, stone masonry, curbing, timber and lumber, metal Culverts, stone and sand, gravel, and other Materials. The Department will not make payment on living or perishable Materials until acceptably planted in their final locations.

If payment for Materials is made to the Contractor based on bills, only, then the Contractor must provide receipted bills to the Department for these Materials within 14 days of the date the Contractor receives payment for the Materials. Failure of the Contractor to provide receipted bills for these Materials within 14 days of the dated the Contractor receives payment will result in the paid amount being withheld from the subsequent progress payment, or payments, until such time the receipted bills are received by the Department.

Materials paid for by the Department are the property of the Department, but the risk of loss shall remain with the Contractor. Payment for Materials does not constitute Acceptance of the Material. If Materials for which the Department has paid are later found to be unacceptable, then the Department may withhold amounts reflecting such unacceptable Materials from payments otherwise due the Contractor.

In the event of Default, the Department may use or cause to be used all paid-for Materials in any manner that is in the best interest of the Department."

SECTION 109
CHANGES

109.1.1 Changes Permitted Add the following to the end of the paragraph: "There will be no adjustment to Contract Time due to an increase or decrease in quantities, compared to those estimated, except as addressed through Contract Modification(s)."

109.1.2 Substantial Changes to Major Items Add the following to the end of the paragraph: "Contract Time adjustments may be made for substantial changes to Major Items when the change affects the Critical Path, as determined by the Department"

109.4.4 Investigation / Adjustment Third sentence, delete the words "subsections (A) - (E)"

109.5.1 Definitions - Types of Delays

B. Compensable Delay Replace (1) with the following; "a weather related Uncontrollable Event of such an unusually severe nature that a Federal Emergency Disaster is declared. The Contractor will only be entitled to an Equitable Adjustment if the Project falls within the geographic boundaries prescribed under the disaster declaration."

109.7.2 Basis of Payment Replace with the following: "Adjustments will be established by mutual Agreement based upon Unit or Lump Sum Prices. These agreed Unit or Lump Sum prices will be full compensation and no additions or mark-ups are allowed. If Agreement cannot be reached, the Contractor shall accept payment on a Force Account basis as provided in Section 109.7.5 - Force Account Work, as full and complete compensation for all Work relating to the Equitable Adjustment."

109.7.3 Compensable Items Delete this Section entirely.

109.7.4 Non-Compensable Items Replace with the following: "The Contractor is not entitled to compensation or reimbursement for any of the following items:

A. Total profit or home office overhead in excess of 15%,
B. ……."

109.7.5 Force Account Work

C. Equipment
Paragraph 2, delete sentence 1 which starts; "Equipment leased…."

Paragraph 6, change sentence 2 from "The Contractor may furnish…" to read "If requested by the Department, the Contractor will produce cost data to assist the Department in the establishment of such rental rate, including all records that are relevant to the Actual Costs including rental Receipts, acquisition costs, financing documents, lease Agreements, and maintenance and operational cost records."
Add the following paragraph; "Equipment leased by the Contractor for Force Account Work and actually used on the Project will be paid for at the actual invoice amount plus 10% markup for administrative costs."

Add the following section;

"F. Subcontractor Work When accomplishing Force Account Work that utilizes Subcontractors, the Contractor will be allowed a maximum markup of 5% for profit and overhead on the Subcontractor's portion of the Force Account Work. If the Department does not accept the Subcontractor quote, then the Subcontractor work will be subject to the Force Account provisions with a 5% markup for profit & overhead.."

SECTION 110
INDEMNIFICATION, BONDING, AND INSURANCE

Delete the entire Section 110.2.3 and replace with the following:
110.2.3 Bonding for Landscape Establishment Period The Contractor shall provide a signed, valid, and enforceable Performance, Warranty, or Maintenance Bond complying with the Contract, to the Department at Final Acceptance.

The bond shall be in the full amount for all Pay Items for work pursuant to Sec 621, Landscape, payable to the "Treasurer - State of Maine," and on the Department's forms, on exact copies thereof, or on forms that do not contain any significant variations from the Department's forms as solely determined by the Department.

The Contractor shall pay all premiums and take all other actions necessary to keep said bond in effect for the duration of the Landscape Establishment Period described in Special Provision 621.0036 - Establishment Period. If the Surety becomes financially insolvent, ceases to be licensed or approved to do business in the State of Maine, or stops operating in the United States, the Contractor shall file new bonds complying with this Section within 10 Days of the date the Contractor is notified or becomes aware of such change.

All Bonds shall be procured from a company organized and operating in the United States, licensed or approved to do business in the State of Maine by the State of Maine Department of Business Regulation, Bureau of Insurance, and listed on the latest Federal Department of the Treasury listing for "Companies Holding Certificates of Authority as Acceptable Sureties on Federal Bonds and as Acceptable Reinsuring Companies."

By issuing a bond, the Surety agrees to be bound by all terms of the Contract, including those related to payment, time for performance, quality, warranties, and the Department's self-help remedy provided in Section 112.1 - Default to the same extent as if all terms of the Contract are contained in the bond(s).

Regarding claims related to any obligations covered by the bond, the Surety shall provide, within 60 Days of Receipt of written notice thereof, full payment of the entire claim or written notice of all bases upon which it is denying or contesting payment. Failure of the Surety to provide such notice within the 60-day period constitutes the Surety's waiver of any right to deny or contest payment and the Surety's acknowledgment that the claim is valid and undisputed.

110 - Indemnification, Bonding and Insurance
Add the following to the end of Section 110, Indemnification, Bonding and Insurance:

Nothing in these Standard Specifications constitutes a waiver of any defense, immunity or limitation of liability that may be available to the Department, or its officers, agents or employees under the Maine Tort Claims Act (Title 14 M.R.S.A. 8101 et seq.), and shall not constitute a waiver of other privileges or immunities that may be available to the Department.

SECTION 202
REMOVING STRUCTURES AND OBSTRUCTIONS

202.02 Removing Buildings Make the following change to the last sentence in the final paragraph, change "…Code of Maine Regulations 401." to "…Department of Environmental Protection Maine Solid Waste Management Rules, 06-096 CMR Ch. 401, Landfill Siting, Design and Operation."

SECTION 203
EXCAVATION AND EMBANKMENT

203.01 Description Under b. Rock Excavation; add the following sentence: "The use of perchlorate is not allowed in blasting operations."

Delete the entire Section 203.041 and replace with the following:
"203.041 Salvage of Existing Hot Mix Asphalt Pavement All existing hot mix asphalt pavement designated to be removed under this contract must be salvaged for utilization. Existing hot mix asphalt pavement material shall not be deposited in any waste area or be placed below subgrade in any embankment.

Methods of utilization may be any of the following:

1. Used as a replacement for untreated aggregate surface course on entrances provided the material contains no particles greater than 50 mm [2 in] in any dimension. Payment will be made under Pay Item 411.09, Untreated Aggregate Surface Course or 411.10, Untreated Aggregate Surface Course, Truck Measure. Material shall be placed, shaped, compacted and stabilized as directed by the Resident.

2. Used as the top 3" of gravel. Recycled Asphalt Pavement (RAP) shall be process to 1½" minus and blending will not be allowed. When this method is utilized, a surcharge will not be required

3. Stockpiled at commercial or approved sites for commercial or MaineDOT use.

4. Other approved methods proposed by the Contractor, and approved by the Resident which will assure proper use of the existing hot mix asphalt pavement.

The cost of salvaging hot mix asphalt material will be included for payment under the applicable pay item, with no additional allowances made, which will be full compensation for removing, temporarily stockpiling, and rehandling, if necessary, and utilizing the material in entrances or other approved uses, or stockpiling at an approved site as described above. The material will also be measured and paid for under the applicable Pay Item if it is reused for aggregate in entrances, or other approved uses."

SECTION 502

STRUCTURAL CONCRETE

502.05 Composition and Proportioning; TABLE #1; NOTE #2; third sentence; Change "…alcohol based saline sealer…" to "alcohol based silane sealer…". Add NOTE #6 to Class S Concrete.

502.0502 Quality Assurance Method A - Rejection by Resident Change the first sentence to read: "For an individual sublot with test results failing to meet the criteria in Table #1, or if the calculated pay factor for Air Content is less than 0.80……"

502.0503 Quality Assurance Method B - Rejection by Resident Change the first sentence to read: "For material represented by a verification test with test results failing to meet the criteria in Table #1, the Department will……"

502.0505 Resolution of Disputed Acceptance Test Results Combine the second and third sentence to read: "Circumstances may arise, however, where the Department may ……"
502.10 Forms and False work
D. Removal of Forms and False work 1., First paragraph; first, second, and third sentence; replace "forms" with "forms and false work"

502.11 Placing Concrete
G. Concrete Wearing Surface and Structural Slabs on Precast Superstructures Last paragraph; third sentence; replace "The temperature of the concrete shall not exceed 24° C [75° F} at the time of placement." with "The temperature of the concrete shall not exceed 24° C [75° F} at the time the concrete is placed in its final position."

502.15 Curing Concrete First paragraph; replace the first sentence with the following; "All concrete surfaces shall be kept wet with clean, fresh water for a curing period of at least 7 days after concrete placing, with the exception of vertical surfaces as provided for in Section 502.10 (D) - Removal of Forms and False work."

Second paragraph; delete the first two sentences.
Third paragraph; delete the entire paragraph which starts "When the ambient temperature…."
Fourth paragraph; delete "approved" to now read "…continuously wet for the entire curing period…"

Fifth paragraph; second sentence; change "…as soon as it is possible to do so without damaging the concrete surface." to "…as soon as possible."

Seventh paragraph; first sentence; change "…until the end of the curing period." to "…until the end of the curing period, except as provided for in Section 502.10(D) - Removal of Forms and False work."

502.19 Basis of Payment First paragraph, second sentence; add "pier nose armor" to the list of items included in the contract price for concrete.

SECTION 503

REINFORCING STEEL

503.06 Placing and Fastening Change the second paragraph, first sentence from: "All tack welding shall be done in accordance with Section 504, Structural Steel." to "All tack welding shall be done in accordance with AWS D1.4 Structural Welding Code - Reinforcing Steel."

SECTION 504
STRUCTURAL STEEL

504.09 Facilities for Inspection Add the follow as the last paragraph: "Failure to comply with the above requirements will be consider to be a denial to allow access to work by the Contractor. The Department will reject any work done when access for inspection is denied."

504.18 Plates for Fabricated Members Change the second paragraph, first sentence from: "…ASTM A 898/A 898 M…" to "…ASTM A 898/A 898 M or ASTM A 435/A 435 M as applicable and…"

504.31 Shop Assembly Add the following as the last sentence: "The minimum assembly length shall include bearing centerlines of at least two substructure units."

504.64 Non Destructive Testing-Ancillary Bridge Products and Support Structures Change the third paragraph, first sentence from "One hundred percent…" to "Twenty five percent…"

SECTION 535
PRECAST, PRESTRESSED CONCRETE SUPERSTRUCTURE

535.02 Materials Change "Steel Strand for Concrete Reinforcement" to "Steel Strand." Add the following to the beginning of the third paragraph; "Concrete shall be Class P conforming to the requirements in this section. 28 day compressive strength shall be as stated on the plans. Coarse aggregate…."

535.05 Inspection Facilities Add the follow as the last paragraph: "If the above requirements are not met, the Contractor shall be considered to be in violation of Standard Specification 104.2.5 – Right to Inspect Work. All work occurring during a violation of this specification will be rejected."

535.26 Lateral Post-Tensioning Replace the first paragraph; "A final tension…" with "Overstressing strands for setting losses cannot be accomplished for chuck to chuck lengths of 7.6 m [25 ft] and less. In such instances, refer to the Plans for all materials and methods. Otherwise, post-tensioning shall be in accordance with PCI standards and shall provide the anchorage force noted in the Plans. The applied jacking force shall be no less than 100% of the design jacking force."

SECTION 603
PIPE CULVERTS AND STORM DRAINS

603.0311 Corrugated Polyethylene Pipe for Option III Replace the Minimum Mandrel Diameter Table with the following:

Nominal Size US Customary (in)	Minimum Mandrel Diameter (in)	Nominal Size Metric (mm)	Minimum Mandrel Diameter (mm)

12	11.23	300	280.73
15	14.04	375	350.91
18	16.84	450	421.09
24	22.46	600	561.45
30	28.07	750	701.81
36	33.69	900	842.18
42	39.30	1050	982.54
48	44.92	1200	1122.90

SECTION 604
MANHOLES, INLETS, AND CATCH BASINS

604.02 Materials Add the following:

"Tops and Traps	712.07
Corrugated Metal Units	712.08
Catch Basin and Manhole Steps	712.09"

SECTION 605
UNDERDRAINS

605.05 Underdrain Outlets Make the following change:

In the first paragraph, second sentence, delete the words "metal pipe".

SECTION 606
GUARDRAIL

606.02 Materials Delete the entire paragraph which reads "The sole patented supplier of multiple mailbox…." and replace with "Acceptable multiple mailbox assemblies shall be listed on the Department's Approved Products List and shall be NCHRP 350 tested and approved."
Delete the entire paragraph which reads "Retroreflective beam guardrail delineators…." and replace with "Reflectorized sheeting for Guardrail Delineators shall meet the requirements of Section 719.01 - Reflective Sheeting. Delineators shall be fabricated from high-impact, ultraviolet and weather resistant thermoplastic.

606.09 Basis of Payment First paragraph; delete the second and third sentence in their entirety and replace with "Butterfly-type guardrail reflectorized delineators shall be mounted on all W-beam guardrail at an interval of every 10 posts [62.5 ft] on tangents sections and every 5 posts [31.25 ft] on curved sections as directed by the Resident. On divided highways, the delineators shall be yellow on the left hand side and silver/white on the right hand side. On two-way roadways, the delineators shall be silver/white on the right hand side. All delineators shall have retroreflective sheeting applied to only the traffic facing side. Reflectorized guardrail delineators will not be paid for directly, but will be considered incidental to the guardrail items."

SECTION 609
CURB

609.04 Bituminous Curb f., Delete the requirement "Color Natural (White)"

SECTION 610
STONE FILL, RIPRAP, STONE BLANKET, AND STONE DITCH PROTECTION

Add the following paragraph to Section 610.02:
"Materials shall meet the requirements of the following Sections of Special Provision 703:

Stone Fill	703.25
Plain and Hand Laid Riprap	703.26
Stone Blanket	703.27
Heavy Riprap	703.28
Definitions	703.32"

Add the following paragraph to Section 610.032.a.
"Stone fill and stone blanket shall be placed on the slope in a well-knit, compact and uniform layer. The surface stones shall be chinked with smaller stone from the same source."

Add the following paragraph to Section 610.032.b:
"Riprap shall be placed on the slope in a well-knit, compact and uniform layer. The surface stones shall be chinked with smaller stone from the same source."

Add the following to Section 610.032: "Section 610.032.d. The grading of riprap, stone fill, stone blanket and stone ditch protection shall be determined by the Resident by visual inspection of the load before it is dumped into place, or, if ordered by the Resident, by dumping individual loads on a flat surface and sorting and measuring the individual rocks contained in the load. A separate, reference pile of stone with the required gradation will be placed by the Contractor at a convenient location where the Resident can see and judge by eye the suitability of the rock being placed during the duration of the project. The Resident reserves the right to reject stone at the job site or stockpile, and in place. Stone rejected at the job site or in place shall be removed from the site at no additional cost to the Department."

SECTION 615
LOAM

615.02 Materials Make the following change:

Organic Content	Percent by Volume
Humus	"5% - 10%", as determined by Ignition Test

SECTION 618
SEEDING

618.01 Description Change the first sentence to read as follows: "This work shall consist of furnishing and applying seed ….." Also remove ",and cellulose fiber mulch" from 618.01(a).

618.03 Rates of Application In 618.03(a), remove the last sentence and replace with the following: "These rates shall apply to Seeding Method 2, 3, and Crown Vetch."

In 618.03(c) "1.8 kg [4 lb]/unit." to "1.95 kg [4 lb]/unit."

618.09 Construction Method In 618.09(a) 1, sentence two, replace "100 mm [4 in]" with "25 mm [1 in] (Method 1 areas) and 50 mm [2 in] (Method 2 areas)"

618.15 Temporary Seeding Change the Pay Unit from Unit to Kg [lb].

SECTION 620
GEOTEXTILES

620.03 Placement Section (c)

Title: Replace "Non-woven" in title with "Erosion Control".
First Paragraph: Replace first word "Non-woven" with "Woven monofilament".
Second Paragraph: Replace second word "Non-woven" with "Erosion Control".

620.07 Shipment, Storage, Protection and Repair of Fabric Section (a)

Replace the second sentence with the following: "Damaged geotextiles, as identified by the Resident, shall be repaired immediately."

620.09 Basis of Payment

Pay Item 620.58: Replace "Non-woven" with "Erosion Control"
Pay Item 620.59: Replace "Non-woven" with "Erosion Control"

SECTION 621
LANDSCAPING

621.0036 Establishment Period In paragraph 4 and 5, change "time of Final Acceptance" to "end of the period of establishment". In Paragraph 7, change "Final Acceptance date" to ""end of the period of establishment" and change "date of Final Acceptance" to "end of the period of establishment".

SECTION 626
HIGHWAY SIGNING

626.034 Concrete Foundations Add to the following to the end of the second paragraph: "Pre-cast and cast-in-place foundations shall be warranteed against leaning and corrosion for two years after the project is completed. If the lean is greater than 2 degrees from normal or the foundation is spalling within the first two years, the Contractor shall replace the foundation at no extra cost."

SECTION 627
PAVEMENT MARKINGS

627.10 Basis of Payment Add to the following to the end of the third paragraph: "If allowed by Special Provision, the Contractor may utilize Temporary Bi-Directional Yellow and White(As required) Delineators as temporary pavement marking lines and paid for at the contract lump sum price. Such payment will include as many applications as required and removal."

SECTION 637
DUST CONTROL

637.06 Basis of Payment Add the following after the second sentence of the third paragraph: "Failure by the Contractor to follow Standard Specification or Special Provision - Section 637 and/or the Contractor's own Soil Erosion and Pollution Control Plan concerning Dust Control and/or the Contractor's own Traffic Control Plan concerning Dust Control and/or visible evidence of excessive dust problems, as determined by the Resident, will result in a reduction in payment, computed by reducing the Lump Sum Total by 5% per occurrence per day. The Department's Resident or any other representative of the Department reserves the right to suspend the work at any time and request a meeting to discuss violations and remedies. The Department shall not be held responsible for any delay in the work due to any suspension under this item. Additional penalties may also be assessed in accordance with Special Provision 652 - Work Zone Traffic Control and Standard Specification 656 - Temporary Soil Erosion and Water Pollution Control."

SECTION 639
ENGINEERING FACILITIES

639.04 Field Offices Change the forth to last paragraph from: "The Contractor shall provide a fully functional desktop copier…" to "….desktop copier/scanner…"

Description Change "Floor Area" to "Floor Area (Outside Dimension)". Change Type B floor area from "15 (160)" to "20 (217)".

639.09 Telephone Paragraph 1 is amended as follows:
"The contractor shall provide **two** telephone lines and two telephones,…."

Add- "In addition the contractor will supply one computer broadband connection, modem lease and router. The router shall have wireless access and be 802.11n or 802.11g capable and wireless. The type of connection supplied will be contingent upon the availability of services (i.e. DSL or Cable Broadband). It shall be the contractor's option to provide dynamic or static IP addresses through the service. **The selected service will have a minimum downstream connection of 1.5 Mbps and 384 Kbps upstream.** The contractor shall be responsible for the installation charges and all reinstallation charges following suspended periods. Monthly service and maintenance charges shall be billed by the Internet Service Provider (ISP) directly to the contractor."

SECTION 652
MAINTENANCE OF TRAFFIC

652.2.3 Flashing Arrow Board Delete the existing 5 paragraphs and replace with the following:

Flashing Arrow Panels (FAP) must be of a type that has been submitted to AASHTO's National Transportation Product Evaluation Program (NTPEP) for evaluation and placed on the Maine Department of Transportations' Approved Products List of Portable Changeable Message Signs & Flashing Arrow Panels.

FAP units shall meet requirements of the current Manual on Uniform Traffic Control Devices (MUTCD) for Type "C" panels as described in Section 6F.56 - Temporary Traffic Control Devices. An FAP shall have matrix of a minimum of 15 low-glare, sealed beam, Par 46 elements capable of either flashing or sequential displays as well as the various operating modes as described in the MUTCD, Chapter 6-F. If an FAP consisting of a bulb matrix is used, each element should be recess-mounted or equipped with an upper hood of not less than 180 degrees. The color presented by the elements shall be yellow.

FAP elements shall be capable of at least a 50 percent dimming from full brilliance. Full brilliance should be used for daytime operation and the dimmed mode shall be used for nighttime operation. FAP shall be at least 2.4 M x 1.2 M [96" x 48"] and finished in non-reflective black. The FAP shall be interpretable for a distance not less than 1.6 km [1 mile].

Operating modes shall include, flashing arrow, sequential arrow, sequential chevron, flashing double arrow, and flashing caution. In the three arrow signals, the second light from the arrow point shall not operate.

The minimum element on-time shall be 50 percent for the flashing mode, with equal intervals of 25 percent for each sequential phase. The flashing rate shall be not less than 25 nor more than 40 flashes per minute. All on-board circuitry shall be solid state.

Primary power source shall be 12 volt solar with a battery back-up to provide continuous operation when failure of the primary power source occurs, up to 30 days with fully charged batteries. Batteries must be capable of being charged from an onboard 110 volt AC power source and the unit shall be equipped with a cable for this purpose.

Controller and battery compartments shall be enclosed in lockable, weather-tight boxes.
The FAP shall be mounted on a pneumatic-tired trailer or other suitable support for hauling to various locations, as directed. The minimum mounting height of an arrow panel should be 2.1 M [7 feet] from the roadway to the bottom of the panel.

The face of the trailer shall be delineated on a permanent basis by affixing retro-reflective material, known as conspicuity material, in a continuous line as seen by oncoming drivers.

A portable changeable message sign may be used to simulate an arrow panel display."

652.2.4 Other Devices Delete the last paragraph and add the following:
"652.2.5 Portable Changeable Message Sign Trailer mounted Portable Changeable Message Signs (PCMS) must be of a type that has been submitted to AASHTO's National Transportation Product Evaluation Program (NTPEP) for evaluation and placed on the Maine Department of Transportations' Approved Products List of Portable Changeable Message Signs & Flashing Arrow Panels. The PCMS unit shall meet or exceed the current specifications of the Manual on Uniform Traffic Control Devices (MUTCD), 6F.55.

The front face of the sign should be covered with a low-glare protective material. The color of the LED elements shall be amber on a black background. The PCMS should be visible from a distance of 0.8 km [0.5 mile] day and night and have a minimum 15º viewing angle. Characters must be legible from a distance of at least 200 M [650 feet].

The message panel should have adjustable display rates (minimum of 3 seconds per phase), so that the entire message can be read at least twice at the posted speed, the off-peak 85th-percentile speed prior to work starting, or the anticipated operating speed. Each message shall consist of either one or two phases. A phase shall consist of up to eight characters per line. The unit must be capable of displaying at least three lines of text with eight characters per line. Each character shall be 457 mm [18”] high. Each character module shall use at least a five wide and seven high pixel matrix. The text of the messages shall not scroll or travel horizontally or vertically across the face of the sign.

Units shall automatically adjust their brightness under varying light conditions to maintain legibility.

The control system shall include a display screen upon which messages can be reviewed before being displayed on the message sign. The control system shall be capable of maintaining memory when power is unavailable. Message must be changeable with either a notebook computer or an on-board keypad. The controller shall have the capability to store a minimum of 200 user-defined and 200 pre-programmed messages. Controller and battery compartments shall be enclosed in lockable, weather-tight boxes.

PCMS units shall have the capability of being made programmable by means of wireless communications. PCMS units shall also be fully capable of having an on-board radar system installed if required for a particular application.

PCMS’ primary power source shall be solar with a battery back-up to provide continuous operation when failure of the primary power source occurs. Batteries must be capable of being charged from a 110 volt AC power source. The unit must also be capable of being operated solely from a 110 volt AC power source and be equipped with a cable for this purpose.

The PCMS shall be mounted on a trailer in such a way that the bottom of the message sign panel shall be a minimum of 2.1 M [7 ft] above the roadway in urban areas and 1.5 M [5 ft] above the roadway in rural areas when it is in the operating mode. PCMS trailers should be of a heavy duty type with a 51 mm [2”] ball hitch and a minimum of four leveling jacks (at each corner). The sign shall be capable of being rotated 360° relative to the trailer. The face of the trailer shall be delineated on a permanent basis by affixing retro-reflective material, known as conspicuity material, in a continuous line as seen by oncoming drivers.”

652.3.3 Submittal of Traffic Control Plan In item e. change “A list of all certified flaggers…” to “A list of all the Contractor’s certified flaggers…”

Change a. in the list of requirements to: “a. The name, telephone number, and other contact numbers (cellular phone, pager, if any) of the Contractor's Traffic Control Supervisor (the person with overall responsibility for following the TCP), who has received Work Zone Traffic Control Training commensurate with the level of responsibility shown in the requirements of

the Contract, and who is empowered to immediately resolve any work zone traffic control deficiencies or issues. Provide documentation that the Traffic Control Supervisor has completed a Work Zone Traffic Control Training Course (AGC, ATSSA, or other industry-recognized training), and a Supervisory refresher training every 5 years thereafter. Submit the course name, training entity, and date of training.

Traffic Control Training Course curriculum must be based on the standards and guidelines of the MUTCD and must include, at a minimum, the following:

1. Parts of Temporary Traffic Control Zone
2. Appropriate use and spacing of signs
3. Use and spacing of channelizing devices
4. Flagging basics
5. Typical examples and applications

The Traffic Control Supervisor, or designee directly overseeing physical installation, adjustment, and dismantling of work zone traffic control, will ensure all personnel performing those activities are trained to execute the work in a safe and proper manner, in accordance with their level of decision-making and responsibility."

Add the follow to the list of requirements: "k. The plan for unexpected nighttime work along with a list of emergency nighttime equipment available on-site."

In the last paragraph add the following as the second sentence: "The Department will review and provide comments to the Contractor within 14 days of receipt of the TCP." Add the following as the last sentence: "The creation and modification of the TCP will be considered incidental to the related 652 items."

652.3.5 Installation of Traffic Control Devices In the first paragraph, first sentence; change "Signs shall be erected…" to "Portable signs shall be erected.." In the third sentence; change "Signs must be erected so that the sign face…" to "Post-mounted signs must also be erected so that the sign face…"

652.4 Flaggers Replace the first paragraph with the following; "The Contractor shall furnish flaggers as required by the TCP or as otherwise specified by the Resident. All flaggers must have successfully completed a flagger test approved by the Department and administered by a Department-approved Flagger-Certifier who is employing that flagger. All flaggers must carry an official certification card with them while flagging that has been issued by their employer. Flaggers shall wear safety apparel meeting ANSI 107-2004 Class 2 risk exposure that clearly identifies the wearer as a person, and is visible at a minimum distance of 300 m [1000 ft], and shall wear a hardhat with 360° retro-reflectivity. For nighttime conditions, Class 3 apparel, meeting ANSI 107-2004, shall be worn along with a hardhat with 360° retro-reflectivity. Retro-reflective or flashing SLOW/STOP paddles shall be used, and the flagger station shall be illuminated to assure visibility in accordance with 652.6.2."

Second paragraph, first sentence; change "…have sufficient distance to stop before entering the workspace." to "…have sufficient distance to stop at the intended stopping point." Third sentence; change "At a spot obstruction…" to "At a spot obstruction with adequate sight distance,…"

Fourth paragraph, delete and replace with "Flaggers shall be provided as a minimum, a 10 minute break, every 2 hours and a 30 minute or longer lunch period away from the work

station. Flaggers may only receive 1 unpaid break per day; all other breaks must be paid. Sufficient certified flaggers shall be available onsite to provide for continuous flagging operations during break periods. If the flaggers are receiving the appropriate breaks, breaker flagger(s) shall be paid starting 2 hours after the work begins and ending 2 hours before the work ends. A maximum of 1 breaker per 6 flaggers will be paid. (1 breaker flagger for 2 to 6 flaggers, 2 breaker flaggers for 7 to 12 flaggers, etc)"

Add the following:
"652.5.1 Rumble Strip Crossing When lane shifts or lane closures require traffic to cross a permanent longitudinal rumble strip for 7 calendar days or less, the Contractor shall install warning signs that read "RUMBLE STRIP CROSSING" with a supplemental Motorcycle Plaque, (W8-15P).

When lane shifts or lane closures require traffic to cross a permanent longitudinal rumble strip for more than 7 calendar days, the Contractor shall pave in the rumble strips in the area that traffic will cross, unless otherwise directed by the Resident. Rumble strips shall be replaced prior to the end of the project, when it is no longer necessary to cross them."

652.6 Nightwork Delete this section entirely and replace with the following:
"652.6.1 Daylight Work Times Unless otherwise described in the Contract, the Contractor is allowed to commence work and end work daily according to the Sunrise/Sunset Table at: http://www.sunrisesunset.com/usa/Maine.asp . If the Project town is not listed, the closest town on the list will be used as agreed at the Preconstruction Meeting. Any work conducted before sunrise or after sunset will be considered Night Work.

652.6.2 Night Work When Night Work occurs (either scheduled or unscheduled), the Contractor shall provide and maintain lighting on all equipment and at all work stations.

The lighting facilities shall be capable of providing light of sufficient intensity to permit good workmanship, safety and proper inspection at all times. The lighting shall be cut off and arranged on stanchions at a height that will provide perimeter lighting for each piece of equipment and will not interfere with traffic, including commercial vehicles, approaching the work site from either direction.

The Contractor shall have available portable floodlights for special areas.

The Contractor shall utilize padding, shielding or other insulation of mechanical and electrical equipment, if necessary, to minimize noise, and shall provide sufficient fuel, spare lamps, generators, etc. to maintain lighting of the work site.

The Contractor shall submit, as a subset of the Traffic Control Plan, a lighting plan at the Preconstruction Conference, showing the type and location of lights to be used for night work. The Resident may require modifications be made to the lighting set up in actual field conditions.

Prior to beginning any Night Work, the Contractor shall furnish a light meter for the Residents use that is capable of measuring the range of light levels from 5 to 20 foot-candles.

Horizontal illumination, for activities on the ground, shall be measured with the photometer parallel to the road surface. For purposes of roadway lighting, the photometer is placed on the pavement. Vertical illumination, for overhead activities, shall be measured with the photometer perpendicular to the road surface. Measurements shall be taken at the height and location of the overhead activity.

Night Work lighting requirements:

Mobile Operations: For mobile-type operations, each piece of equipment (paver, roller, milling machine, etc) will carry indirect (i.e. balloon type) lights capable of producing at least 10 foot-candles of lighting around the work area of the equipment.

Fixed Operations: For fixed-type operations (flaggers, curb, bridge, pipes, etc.), direct (i.e. tower) lighting will be utilized capable of illuminating the work area with at least 10 foot-candles of light.

Hybrid Operations: For hybrid-type operations (guardrail, sweeping, Inslope excavation, etc.), either direct or indirect lighting may be utilized. The chosen lights must be capable of producing at least 10 foot-candles of light around the work area of the equipment
Inspection Operations: Areas required to be inspected by the Department will require a minimum of 5 foot-candles of lighting. This may be accomplished through direct or indirect means.

All workers shall wear safety apparel labeled as meeting the ANSI 107-2004 standard performance for Class 3 risk exposure.

The Contractor shall apply 2- inch wide retro-reflective tape, with alternating red and white segments, to outline the front back and sides of construction vehicles and equipment, to define their shape and size to the extent practicable. Pickup trucks and personal vehicles are exempt from this requirement. The Contractor shall furnish approved signs reading "Construction Vehicle - Keep Back" to be used on trucks hauling to the project when such signs are deemed necessary by the Resident. The signs shall be a minimum of 30 inches by 60 inches, Black and Orange, ASTM D 4956 - Type VII, Type VIII, or Type IX (prismatic).

All vehicles used on the project, including pickup trucks and personal vehicles, shall be equipped with amber flashing lights, visible from both front and rear, or by means of single, approved type, revolving, flashing or strobe lights mounted so as to be visible 360º. The vehicle flashing system shall be in continuous operation while the vehicle is on any part of the project.

The Resident or any other representative of the Department reserves the right to suspend the work at any time and request a meeting to discuss violations and remedies. The Department shall not be held responsible for any delay in the work due to any suspension under this item. Failure to follow the approved Lighting Plan will result in a Traffic Control violation.

Payment for lighting, vehicle mounted signs and other costs accrued because of night work will not be made directly but will be considered incidental to the related contract items."

652.8.2 Other Items Replace the first paragraph with the following: "The accepted quantities of flagger hours will be paid for at the contract unit price per hour for each flagging station occupied excluding lunch breaks, and for each approved breaker flagger. Overtime hours, as reported on the certified payrolls, will be paid an additional 30% of the bid price for 652.38. The computation and additional payment for overtime hours will occur during the project close-out process and will be paid as additional hours of 652.38 to the nearest ¼ hour. The contract unit price shall be full compensation for hiring, transporting, equipping, supervising, and the payment of flaggers and all overhead and incidentals necessary to complete the work." Replace the last paragraph with the following: "There will be no payment made under any 652 pay items after the expiration of the adjusted total contract time."

SECTION 653
POLYSTYRENE PLASTIC INSULATION

653.05 Placing Backfill In the second sentence; change "…shall be not less than 150 mm [6 in] loose measure." to "…shall be not less than 250 mm [10 in] loose measure." In the third sentence; change "…crawler type bulldozer of not more than 390 kg/m^2 [80 lb/ft^2] ground contact pressure…" to "…crawler type bulldozer of not more than 4875 kg/m^2 [2000 lb/ft^2] ground contact pressure…"

653.06 Compaction In the last sentence; change "…not more than 390 kg/m^2 [80 lb/ft^2] ground contact…" to "…not more than 4875 kg/m^2 [2000 lb/ft^2] ground contact…"

SECTION 656
TEMPORARY SOIL EROSION AND WATER POLLUTION CONTROL

656.5.1 If Pay Item 656.75 Provided Replace the second paragraph with the following: "Failure by the Contractor to follow Standard Specification or Special Provision - Section 656 and/or the Contractor's own Soil Erosion and Water Pollution Control Plan (SEWPCP) will result in a violation letter and a reduction in payment as shown in the schedule below. The Department's Resident or any other representative of The Department reserves the right to suspend the work at any time and request a meeting to discuss violations and remedies. The Department shall not be held responsible for any delay in the work due to any suspension under this item.

ORIGINAL CONTRACT AMOUNT

From	Up to and	Amount of Penalty Damages per Violation		
More Than	Including	1st	2nd	3rd & Subsequent
$0	$1,000,000	$250	$500	$1,250
$1,000,000	$2,000,000	$500	$1,000	$2,500
$2,000,000	$4,000,000	$1,000	$2,000	$5,000
$4,000,000	and more	$2,000	$4,000	$10,000"

SECTION 701
STRUCTURAL CONCRETE RELATED MATERIALS

701.10 Fly Ash - Chemical Requirements Change all references from "ASTM C311" to "ASTM C114".

SECTION 703
AGGREGATES

703.05 Aggregate for Sand Leveling Change the percent passing the 9.5 mm [3/8 in] sieve from "85 – 10" to "85 – 100"

703.06 Aggregate for Base and Subbase Delete the first paragraph: "The material shall have…" and replace with "The material shall have a minimum degradation value of 15 as determined by Washington State DOT Test Method T113, Method of Test for Determination of Degradation Value (January 2009 version), except that the reported degradation value will be the result of testing a single specimen from that portion of a sample that passes the 12.5 mm [½ in] sieve and is retained on the 2.00 mm [No. 10] sieve, minus any reclaimed asphalt pavement used."

703.18 Common Borrow Replace the first paragraph with the following: "Common borrow shall consist of earth, suitable for embankment construction. It shall be free from frozen material, perishable rubbish, peat, and other unsuitable material including material currently or previously contaminated by chemical, radiological, or biological agents unless the material is from a DOT project and authorized by DEP for use."

703.22 Underdrain Backfill Material Change the first paragraph from "…for Underdrain Type B…" to "…for Underdrain Type B and C…"

Replace subsections 703.25 through 703.28 with the following:
"703.25 Stone Fill Stones for stone fill shall consist of hard, sound, durable rock that will not disintegrate by exposure to water or weather. Stone for stone fill shall be angular and rough. Rounded, subrounded, or long thin stones will not be allowed. Stone for stone fill may be obtained from quarries or by screening oversized rock from earth borrow pits. The maximum allowable length to thickness ratio will be 3:1. The minimum stone size (10 lbs) shall have an average dimension of 5 inches. The maximum stone size (500 lbs) shall have a maximum dimension of approximately 36 inches. Larger stones may be used if approved by the Resident. Fifty percent of the stones by volume shall have an average dimension of 12 inches (200 lbs).

703.26 Plain and Hand Laid Riprap Stone for riprap shall consist of hard, sound durable rock that will not disintegrate by exposure to water or weather. Stone for riprap shall be angular and rough. Rounded, subrounded or long thin stones will not be allowed. The maximum allowable length to width ratio will be 3:1. Stone for riprap may be obtained from quarries or by screening oversized rock from earth borrow pits. The minimum stone size (10 lbs) shall have an average dimension of 5 inches. The maximum stone size (200 lbs) shall have an average dimension of approximately 12 inches. Larger stones may be used if approved by the Resident. Fifty percent of the stones by volume shall have an average dimension greater than 9 inches (50 lbs).

703.27 Stone Blanket Stones for stone blanket shall consist of sound durable rock that will not disintegrate by exposure to water or weather. Stone for stone blanket shall be angular and rough. Rounded or subrounded stones will not be allowed. Stones may be obtained from quarries or by screening oversized rock from earth borrow pits. The minimum stone size (300 lbs) shall have minimum dimension of 14 inches, and the maximum stone size (3000 lbs) shall have a maximum dimension of approximately 66 inches. Fifty percent of the stones by volume shall have average dimension greater than 24 inches (1000 lbs).

703.28 Heavy Riprap Stone for heavy riprap shall consist of hard, sound, durable rock that will not disintegrate by exposure to water or weather. Stone for heavy riprap shall be angular and rough. Rounded, subrounded, or thin, flat stones will not be allowed. The maximum allowable length to width ratio will be 3:1. Stone for heavy riprap may be obtained from quarries or by screening oversized rock from earth borrow pits. The minimum stone size (500 lbs) shall have minimum dimension of 15 inches, and at least fifty percent of the stones by volume shall have an average dimension greater than 24 inches (1000 lbs)."

Add the following paragraph:
"703.32 Definitions (ASTM D 2488, Table 1).
Angular: Particles have sharp edges and relatively plane sides with unpolished surfaces
Subrounded: Particles have nearly plane sides but have well-rounded corners and edges
Rounded: Particles have smoothly curved sides and no edges"

SECTION 706
NON-METALLIC PIPE

706.06 Corrugated Polyethylene Pipe for Underdrain, Option I and Option III Culvert Pipe Change the first sentence from "…300 mm diameters to 900 mm" to "…300 mm diameters to 1200 mm" Delete, in its' entirety, the last sentence which begins "This pipe and resins…" and replace with the following; "Manufacturers of corrugated polyethylene pipe must participate in, and maintain compliance with, AASHTO's National Transportation Product Evaluation Program (www.ntpep.org) which audits producers of plastic pipe. A certificate of compliance must be provided with each shipment."

SECTION 708
PAINTS AND PERSERVATIVES

708.03 Pavement Marking Paint Change the first sentence from "…AASHTO M248" to "…the Maine DOT Maintenance Fast-Dry Water-Based Traffic Paint on file at the Traffic Section in Augusta". Delete, in its' entirety, the last sentence.

SECTION 709
REINFORCING STEEL AND WELDED STEEL WIRE FABIC

709.03 Steel Strand Change the second paragraph from "…shall be 12mm [½ inch] AASHTO M203M/M203 (ASTM A416/A416M)…" to "…shall be 15.24 mm [0.600 inch] diameter AASHTO M203 (ASTM A416)…"

SECTION 710
FENCE AND GUARDRAIL

710.03 Chain Link Fabric Add the following sentence: "Chain Link fabric for PVC coated shall conform to the requirements of AASHTO M181, Type IV-Class B."

710.04 Metal Beam Rail Replace with the following: "Galvanized steel rail elements shall conform to the requirements of AASHTO M 180, Class A, Type II.

When corrosion resistant steel is specified, rail shall conform to AASHTO M 180, Class A, Type IV. Beams of corrosion resistant steel shall not be painted or galvanized. They shall be so handled and stored that the traffic face of these beams, used in a continuous run of guardrail, shall not show a distinctive color differential.

When metal beam rail is to be installed on a curve having a radius of curvature of 150 ft. or less, the beam sections shall be fabricated on an arc to the required radius and permanently stamped or embossed with the designated radius.

The engineer may take one piece of guardrail, a backup plate, and end or buffer section from each 200 pieces in a lot, or from each lot if less than 200 pieces are included therein for determination of compliance with specification requirements. If one piece fails to conform to the requirements of this specification, two other pieces shall be tested. If either of these pieces fails to conform to the requirements of this specification, the lot of material represented by these samples shall be rejected. A lot shall be considered that quantity of material offered for inspection at one time that bears the same heat and coating identification."

710.07 Guardrail Posts Section b. change "…AASHTO M183/M183M…" to "…AASHTO M 270M/M 270 Grade 250 (36)…"

SECTION 712
MISCELLANEOUS HIGHWAY MATERIALS

712.04 Stone Curbing and Edging Delete the existing and replace with the following: "Stone for curbing and edging shall be approved granite from acceptable sources. The stone shall be hard and durable, predominantly gray in color, free from seams that would be likely to impair its structural integrity, and of a smooth splitting character. Natural grain size and color variations characteristic of the source deposit will be permitted. Such natural variations may include bands or clusters of mineral crystallization provided they do not impair the structural integrity of the curb stone. The Contractor shall submit for approval the name of the quarry that is the proposed source of the granite for curb materials along with full scale color photos of the granite. Such submission shall be made sufficiently in advance of ordering so that the Resident may have an opportunity to judge the stone, both as to quality and appearance. Samples of curbing shall be submitted for approval only when requested by the Resident. The dimensions, shape, and other details shall be as shown on the plans."

712.06 Precast Concrete Units In the first paragraph, change "…ASTM C478M…" to "…AASHTO M199…" Delete the second paragraph and replace with the following; "Approved structural fibers may be used as a replacement of 6 x 6 #10 gauge welded wire fabric when used at an approved dosage rate for the construction of manhole and catch basin units. The material used shall be one of the products listed on the Maine Department of Transportation's Approved Product List of Structural Fiber Reinforcement." Delete the fifth

paragraph and replace with the following; "The concrete mix design shall be approved by the Department. Concrete shall contain 6% air content, plus or minus 1½% tolerance when tested according to AASHTO T152. All concrete shall develop a minimum compressive strength of 28 MPa [4000 psi] in 28 days when tested according to AASHTO T22. The absorption of a specimen, when tested according to AASHTO T280, Test Method "A", shall not exceed nine percent of the dry mass."

Add the following:
"712.07 Tops, and Traps These metal units shall conform to the plan dimensions and to the following specification requirements for the designated materials.

Gray iron or ductile iron castings shall conform to the requirements of AASHTO M306 unless otherwise designated."

712.08 Corrugated Metal Units The units shall conform to plan dimensions and the metal to AASHTO M36/M36M. Bituminous coating, when specified, shall conform to AASHTO M190 Type A.

712.09 Catch Basin and Manhole Steps Steps for catch basins and for manholes shall conform to ASTM C478M [ASTM C478], Section 13 for either of the following material:

(a) Aluminum steps-ASTM B221M, [ASTM B211] Alloy 6061-T6 or 6005-T5.

(b) Reinforced plastic steps Steel reinforcing bar with injection molded plastic coating copolymer polypropylene. Polypropylene shall conform to ASTM D 4101.

712.23 Flashing Lights Flashing Lights shall be power operated or battery operated as specified.

(a) Power operated flashing lights shall consist of housing, adapters, lamps, sockets, reflectors, lens, hoods and other necessary equipment designed to give clearly visible signal indications within an angle of at least 45 degrees and from 3 to 90 m [10 to 300 ft] under all light and atmospheric conditions.

Two circuit flasher controllers with a two-circuit filter capable of providing alternate flashing operations at the rate of not less than 50 nor more than 60 flashes per minute shall be provided.

The lamps shall be 650 lumens, 120 volt traffic signal lamps with sockets constructed to properly focus and hold the lamp firmly in position.
The housing shall have a rotatable sun visor not less than 175 mm [7 in] in length designed to shield the lens.

Reflectors shall be of such design that light from a properly focused lamp will reflect the light rays parallel. Reflectors shall have a maximum diameter at the point of contact with the lens of approximately 200 mm [8 in].

The lens shall consist of a round one-piece convex amber material which, when mounted, shall have a visible diameter of approximately 200 mm [8 in]. They shall distribute light

and not diffuse it. The distribution of the light shall be asymmetrical in a downward direction. The light distribution of the lens shall not be uniform, but shall consist of a small high intensity portion with narrow distribution for long distance throw and a larger low intensity portion with wide distribution for short distance throw. Lenses shall be marked to indicate the top and bottom of the lens.

(b) Battery operated flashing lights shall be self- illuminated by an electric lamp behind the lens. These lights shall also be externally illuminated by reflex-reflective elements built into the lens to enable it to be seen by reflex-reflection of the light from the headlights of oncoming traffic. The batteries must be entirely enclosed in a case. A locking device must secure the case. The light shall have a flash rate of not less than 50 nor more than 60 flashes per minute from minus 30 °C [minus 20 °F] to plus 65 °C [plus 150 °F]. The light shall have an on time of not less than 10 percent of the flash cycle. The light beam projected upon a surface perpendicular to the axis of the light beam shall produce a lighted rectangular projection whose minimum horizontal dimension shall be 5 degrees each side of the horizontal axis. The effective intensity shall not have an initial value greater than 15.0 candelas or drop below 4.0 candelas during the first 336 hours of continuous flashing. The illuminated lens shall appear to be uniformly bright over its entire illuminated surface when viewed from any point within an angle of 9 degrees each side of the vertical axis and 5 degrees each side of the horizontal axis. The lens shall not be less than 175 mm [7 in] in diameter including a reflex-reflector ring of 13 mm [½ in] minimum width around the periphery. The lens shall be yellow in color and have a minimum relative luminous transmittance of 0.440 with a luminance of 2854° Kelvin. The lens shall be one-piece construction. The lens material shall be plastic and meet the luminous transmission requirements of this specification. The case containing the batteries and circuitry shall be constructed of a material capable of withstanding abuse equal to or greater than 1.21 mm thick steel [No. 18 U.S. Standard Gage Steel]. The housing and the lens frame, if of metal shall be properly cleaned, degreased and pretreated to promote adhesion. It shall be given one or more coats of enamel which, when dry shall completely obscure the metal. The enamel coating shall be of such quality that when the coated case is struck a light blow with a sharp tool, the paint will not chip or crack and if scratched with a knife will not powder. The case shall be so constructed and closed as to exclude moisture that would affect the proper operation of light. The case shall have a weep hole to allow the escape of moisture from condensation. Photoelectric controls, if provided, shall keep the light operating whenever the ambient light falls below 215 lx [20 foot candles]. Each light shall be plainly marked as to the manufacturer's name and model number.

If required by the Resident, certification as to conformance to these specifications shall be furnished based on results of tests made by an independent testing laboratory. All lights are subject to random inspection and testing. All necessary random samples shall be provided to the Resident upon request without cost to the Department. All such samples shall be returned to the Contractor upon completion of the tests.

712.32 Copper Tubing Copper tubing and fittings shall conform to the requirements of ASTM B88M Type A [ASTM B88, Type K] or better.

712.33 Non-metallic Pipe, Flexible Non-metallic pipe and pipe fittings shall be acceptable flexible pipe manufactured from virgin polyethylene polymer suitable for transmitting liquids intended for human or animal consumption.

712.34 Non-metallic Pipe, Rigid Non-metallic pipe shall be Schedule 40 polyvinylchloride (PVC) that meets the requirement of ASTM D1785. Fittings shall be of the same material.

712.341 Metallic Pipe Metallic pipe shall be ANSI, Standard B36.10, Schedule 40 steel pipe conforming to the requirements of ASTM A53 Types E or S, Grade B. End plates shall be steel conforming to ASTM A36/A36M.

Both the sleeve and end plates shall be hot dip galvanized. Pipe sleeve splices shall be welded splices with full penetration weld before galvanizing.

712.35 Epoxy Resin Epoxy resin for grouting or sealing shall consist of a mineral filled thixotropic, flexible epoxy resin having a pot life of approximately one hour at 10°C [50°F]. The grout shall be an approved product suitable for cementing steel dowels into the preformed holes of curb inlets and adjacent curbing. The sealant shall be an approved product, light gray in color and suitable for coating the surface.

712.36 Bituminous Curb The asphalt cement for bituminous curb shall be of the grade required for the wearing course, or shall be Viscosity Grade AC-20 meeting the current requirements of Subsection 702.01 Asphalt Cement. The aggregate shall conform to the requirements of Subsection 703.07. The coarse aggregate portion retained on the 2.36 mm [No. 8] sieve may be either crushed rock or crushed gravel.

The mineral constituents of the bituminous mixture shall be sized and graded and combined in a composite blend that will produce a stable durable curbing with an acceptable texture.

Bituminous material for curb shall meet the requirements of Section 403 - Hot Bituminous Pavement.

712.37 Precast Concrete Slab Portland cement concrete for precast slabs shall meet the requirements of Section 502 - Structural Concrete, Class A.

The slabs shall be precast to the dimension shown on the plans and cross section and in accordance with the Standard Detail plans for Concrete Sidewalk Slab. The surface shall be finished with a float finish in accordance with Subsection 502.14(c). Lift devices of sufficient strength to hold the slab while suspended from cables shall be cast into the top or back of the slab.

712.38 Stone Slab Stone slabs shall be of granite from an acceptable source, hard, durable, predominantly gray in color, free from seams which impair the structural integrity and be of smooth splitting character. Natural color variations characteristic of the deposit will be permitted. Exposed surfaces shall be free from drill holes or indications of drill holes. The granite slabs in any one section of backslope must be all the same finish.

The granite slabs shall be scabble dressed or sawed to an approximately true plane having no projections or depressions over 13 mm [½ in] under a 600 mm [2 ft] straightedge or over 25 mm [1 in] under a 1200 mm [4 ft] straightedge. The arris at the intersection of the top surface and exposed front face shall be pitched so that the arris line is uniform throughout the length of the installed slabs. The sides shall be square to the exposed face unless the slabs are to be set on a radius or other special condition which requires that the joints be cut to fit, but in any case shall be so finished that when the stones are placed side by side no space more than 20 mm [3/4 in] shall show in the joint for the full exposed height.

Liftpin holes in all sides will be allowed except on the exposed face.

SECTION 717
ROADSIDE IMPROVEMENT MATERIAL

717.03 C. Method #3 - Roadside Mixture #3 Change the seed proportions to the following:

Crown Vetch	25%
Perennial Lupine	25%
Red Clover	12.5%
Annual Rye	37.5%

717.05 Mulch Binder Change the third sentence to read as follows:

"Paper fiber mulch may be used as a binder at the rate of 2.3 kg/unit [5 lb/unit]."

SECTION 720
STRUCTURAL SUPPORTS FOR HIGHWAY SIGNS, LUMINAIRES, AND TRAFFIC SIGNALS

720.08 U-Channel Posts Change the first sentence from "…, U-Channel posts…" to "…, Rib Back U-Channel posts…"

SECTION 722
GEOTEXTILES

722.01 Stabilization/Reinforcement Geotextile Add the following to note #3; "The strengths specified in the columns labeled"<50%" and "≥ 50%" refer to the elongation at which the geotextile material was tested. For example; if a fabric is tested at 15% elongation then it must meet or exceed the minimum strength shown in the "<50%" column. Submittals must include the percent elongation at which the material was tested."

722.02 Drainage Geotextile Add the following to note #3; "The strengths specified in the columns labeled"<50%" and "≥ 50%" refer to the elongation at which the geotextile material was tested. For example; if a fabric is tested at 15% elongation then it must meet or exceed the minimum strength shown in the "<50%" column. Submittals must include the percent elongation at which the material was tested."

722.01 Erosion Control Geotextile Add the following note to Elongation in the Mechanical Property Table; "The strengths specified in the columns labeled"<50%" and "≥ 50%" refer to the elongation at which the geotextile material was tested. For example; if a fabric is tested at 15% elongation then it must meet or exceed the minimum strength shown in the "<50%" column. Submittals must include the percent elongation at which the material was tested."

APPENDIX A TO DIVISION 100

SECTION 1 - BIDDING PROVISIONS

A. Federally Required Certifications By signing and delivering a Bid, the Bidder certifies as provided in all certifications set forth in this Appendix A - Federal Contract Provisions Supplement including:

- Certification Regarding No Kickbacks to Procure Contract as provided on this page 1 below.
- Certification Regarding Non-collusion as provided on page 1 below.
- Certification Regarding Non-segregated Facilities as provided by FHWA Form 1273, section III set forth on page 21 below.
- "Certification Regarding Debarment, Suspension, Ineligibility and Voluntary Exclusion" as provided by FHWA Form 1273, section XI set forth on page 32 below.
- "Certification Regarding Use of Contract Funds for Lobbying" as provided by FHWA Form 1273, section XII set forth on page 35 below.

Unless otherwise provided below, the term "Bidder", for the purposes of these certifications, includes the Bidder, its principals, and the person(s) signing the Bid. Upon execution of the Contract, the Bidder (then called the Contractor) will again make all the certifications indicated in this paragraph above.

CERTIFICATION REGARDING NO KICKBACKS TO PROCURE CONTRACT Except expressly stated by the Bidder on sheets submitted with the Bid (if any), the Bidder hereby certifies, to the best of its knowledge and belief, that it has not:

(A) employed or retained for a commission, percentage, brokerage, contingent fee, or other consideration, any firm or person (other then a bona fide employee working solely for me) to solicit or secure this contract;

(B) agreed, as an express or implied condition for obtaining this contract, to employ or retain the services of any firm or person in connection with carrying out the contract, or;

C) paid, or agreed to pay, to any firm, organization, or person (other than a bona fide employee working solely for me) any fee, contribution, donation, or consideration of any kind for, or in connection with, procuring or carrying out the contract;

By signing and submitting a Bid, the Bidder acknowledges that this certification is to be furnished to the Maine Department of Transportation and the Federal Highway Administration, U.S. Department of Transportation in connection with this contract in anticipation of federal aid highway funds and is subject to applicable state and federal laws, both criminal and civil.

CERTIFICATION REGARDING NONCOLLUSION Under penalty of perjury as provided by federal law (28 U.S.C. §1746), the Bidder hereby certifies, to the best of its knowledge and belief, that:

the Bidder has not, either directly or indirectly, entered into any agreement, participated in any collusion, or otherwise taken any action in restraint of competitive bidding in connection with the Contract.

For a related provisions, see Section 102.7.2 (C) of the Standard Specifications - "Effects of Signing and Delivery of Bids" - "Certifications", Section 3 of this Appendix A entitled "Other Federal Requirements" including section XI - "Certification Regarding Debarment, Suspension, Ineligibility, and Voluntary Exclusion" and section XII. - "Certification Regarding Use of Contract Funds for Lobbying."

****

B. Bid Rigging Hotline To report bid rigging activities call: **1-800-424-9071**

The U.S. Department of Transportation (DOT) operates the above toll-free "hotline" Monday through Friday, 8:00 a.m. to 5:00 p.m., eastern time. Anyone with knowledge of possible bid rigging, bidder collusion, or other fraudulent activities should use the "hotline" to report such activities.

The "hotline" is part of the DOT's continuing effort to identify and investigate highway construction contract fraud and abuse and is operated under the direction of the DOT Inspector General. All information will be treated confidentially and caller anonymity will be respected.

****

SECTION 2 - FEDERAL EEO AND CIVIL RIGHTS REQUIREMENTS

Unless expressly otherwise provided in the Bid Documents, the provisions contained in this Section 2 of this "Federal Contract Provisions Supplement" are hereby incorporated into the Bid Documents and Contract.

A. Nondiscrimination & Civil Rights - Title VI The Contractor and its subcontractors shall not discriminate on the basis of race, color, national origin, or sex in the performance of this Contract. The Contractor shall carry out applicable requirements of 49 CFR Part 26 in the award and administration of DOT assisted contracts. Failure by the Contractor to carry out these requirements is a material breach of this contract, which may result in the termination of this contract or such other remedy as the Department deems appropriate. The Contractor and subcontractors shall comply with Title VI of the Civil Rights Act of 1964, as amended, and with all State of Maine and other Federal Civil Rights laws.

For related provisions, see Subsection B - "Nondiscrimination and Affirmative Action - Executive Order 11246" of this Section 2 and Section 3 - Other Federal Requirements of this "Federal Contract Provisions Supplement" including section II - "Nondiscrimination" of the "Required Contract Provisions, Federal Aid Construction Contracts", FHWA-1273.

B. Nondiscrimination and Affirmative Action - Executive Order 11246 Pursuant to Executive Order 11246, which was issued by President Johnson in 1965 and amended in 1967 and 1978, this Contract provides as follows.

The Contractor shall take specific affirmative actions to ensure equal employment opportunity. The evaluation of the Contractor's compliance with these specifications shall be based upon its efforts to achieve maximum results from its actions. The Contractor shall

document these efforts fully, and shall implement affirmative action steps at least as extensive as the following:

Ensure and maintain a working environment free of harassment, intimidations, and coercion at all sites, and in all facilities at which the Contractor's employees are assigned to work. The Contractor, where possible, will assign two or more women to each construction project. The Contractor shall specifically ensure that all forepersons, superintendents, and other on-site supervisory personnel are aware of and carry out the Contractor's obligation to maintain such a working environment, with specific attention to minority or female individuals working at such sites or in such facilities.

Establish and maintain a current list of minority and female recruitment sources, provide written notification to minority and female recruitment sources and to community organizations when the Contractor or its union have employment opportunities available, and to maintain a record of the organization's responses.

Maintain a current file of the names, addresses and telephone numbers of each minority and female off-the-street applicant and minority or female referral from a union, a recruitment source or community organization and of what action was taken with respect to each such individual. If such individual was sent to the union hiring hall for referral and was not referred back to the Contractor by the union or, if referred, not employed by the Contractor, this shall be documented in the file with the reason therefore, along with whatever additional actions the Contractor may have taken.

Provide immediate written notification to the Department's Civil Rights Office when the union or unions with which the Contractor has a collective bargaining agreement has not referred to the Contractor a minority person or woman sent by the Contractor, or when the Contractor has other information that the union referral process has impeded the Design-Builder's efforts to meet its obligations.

Develop on-the-job training opportunities and/or participate in training programs for the area which expressly include minorities and women, including upgrading programs and apprenticeship and trainee programs relevant to the Contractor's employment needs, especially those programs funded or approved by the Department of Labor. The Contractor shall provide notice of these programs to the sources compiled under B above.

Disseminate the Contractor's EEO policy by providing notice of the policy to unions and training programs and requesting their cooperation in assisting the Contractor in meeting its EEO obligation; by including it in any policy manual and collective bargaining agreement; by publicizing it in the company newspaper, annual report, etc.; by specific review of the policy with all management personnel and with all minority and female employees at least once a year; and by posting the company EEO policy on bulletin boards accessible to all employees at each location where construction work is performed.

Review, at least annually, the company's EEO policy and affirmative action obligations under these specifications with all employees having any responsibility for hiring, assignment, layoff, termination, or other employment decisions including specific review

of these items with on-site supervisory personnel such as Superintendents, General Forepersons, etc., prior to the initiation of construction work at any job site. A written record shall be made and maintained identifying the time and place of these meetings, persons attending, subject matter discussed, and disposition of the subject matter.

Disseminate the Contractor's EEO policy externally by including it in any advertising in the news media, specifically including minority and female news media, and providing written notification to and discussing the Contractor's EEO policy with other Contractor's and Subcontractors with whom the Contractor does or anticipates doing business.

Direct its recruitment efforts, both orally and written to minority, female and community organizations, to schools with minority and female students and to minority and female recruitment and training organizations serving the Contractor's recruitment area and employment needs. Not later that one month prior to the date for the acceptance of applications for apprenticeship or other training by any recruitment source, the Contractor shall send written notification to organizations such as the above describing the openings, screenings, procedures, and test to be used in the selection process.

Encourage present minority and female employees to recruit other minority persons and women and, where reasonable, provide after school, summer and vacation employment to minority and female youth, both on the site and in other areas of a Contractor's workforce.

Validate all tests and other selection requirements.

Conduct, at least annually, an inventory and evaluation at least of all minority and female personnel for promotional opportunities and encourage these employees to seek or to prepare for, through appropriate training, etc., such opportunities.

Ensure that seniority practices, job classifications, work assignments and other personnel practices, do not have a discriminatory effect by continually monitoring all personnel and employment related activities to ensure that the EEO policy and the Contractor's obligations under these specifications are being carried out.

Ensure that all facilities and company activities are non segregated except that separate or single-user toilet and necessary changing facilities shall be provided to assure privacy between the sexes.

Document and maintain a record of all solicitations of offers for subcontracts from minority and female construction Contractor's and suppliers, including circulation of solicitations to minority and female Contractor associations and other business associations.

Conduct a review, at least annually, of all supervisors' adherence to and performance under the Contractor's EEO policies and affirmative action obligations.

C. Goals for Employment of Women and Minorities Per Executive Order 11246, craft tradesperson goals are 6.9% women and .5% minorities employed. However, goals may be

adjusted upward at the mutual agreement of the Contractor and the Department. Calculation of these percentages shall not include On-the-Job Training Program trainees, and shall not include clerical or field clerk position employees.

For a more complete presentation of requirements for such Goals, see the federally required document "Goals for Employment of Females and Minorities" set forth in the next 6 pages below.

****

Start of GOALS FOR EMPLOYMENT OF FEMALES AND MINORITIES
Federally Required Contract Document

§60-4.2 Solicitations

(d) The following notice shall be included in, and shall be part of, all solicitations for offers and bids on all Federal and federally assisted construction contracts or subcontracts in excess of $10,000 to be performed in geographical areas designated by the Director pursuant to §60-4.6 of this part (see 41 CFR 60-4.2(a)):

Notice of Requirement for Affirmative Action to Ensure Equal Opportunity (Executive Order 11246)

1. The Offeror's or bidder's attention is called to the "Equal Opportunity Clause" and the "Standard Federal Equal Employment Specifications" set forth herein.

2. The goals and timetables for minority and female participation, expressed in percentage terms for the Contractor's aggregate work force in each trade on all construction work in the covered area, are as follows:

Goals for female participation in each trade 6.9%

Goals for minority participation for each trade
Maine
001 Bangor, ME 0.8%
Non-SMSA Counties (Aroostook, Hancock, Penobscot, Piscataquis, Waldo, Washington)

002 Portland-Lewiston, ME
SMSA Counties: 4243 Lewiston-Auburn, ME 0.5%
(Androscoggin)

6403 Portland, ME 0.6%
(Cumberland, Sagadahoc)

Non-SMSA Counties: 0.5%
(Franklin, Kennebec, Knox, Lincoln, Oxford, Somerset, York)

These goals are applicable to all the Contractor's construction work (whether or not it is Federal or federally assisted) performed in the covered area. If the contractor performs

construction work in a geographical area located outside of the covered area, it shall apply the goals established for such geographical area where the work is actually performed. With regard to this second area, the contractor also is subject to the goals for both its federally involved and non federally involved construction.

The contractor's compliance with the Executive Order and the regulations in 41 CFR Part 60-4 shall be based on its implementation of the Equal Opportunity Clause, specific affirmative action obligations required by the specifications set forth in 41 CFR 60-4.3(a), and its efforts to meet the goals. The hours of minority and female employment and training must be substantially uniform throughout the length of the contract, and in each trade, and the contractor shall make a good faith effort to employ minorities and women evenly on each of its projects. The transfer of minority or female employees or trainees from Contractor to Contractor or from project to project for the sole purpose of meeting the Contractor's goals shall be in violation of the contract, the Executive Order and the regulations in 41 CFR Part 60-4. Compliance with the goals will be measured against the total work hours performed.

3. The Contractor shall provide written notification to the Director of the Office of Federal Contract Compliance Programs within 10 working days of award of any construction subcontract in excess of $10,000 at any tier for construction work under the contract resulting from this solicitation. The notification shall list the name, address and telephone number of the subcontractor, employer identification number of the subcontractor, estimated dollar amount of the subcontract; estimated started and completion dates of the subcontract; and the geographical area in which the subcontract is to be performed.

4. As used in this Notice, and in the Contract resulting from this solicitation, the "covered area" is (insert description of the geographical areas where the contract is to be performed giving the state, county and city, if any).

STANDARD FEDERAL EQUAL EMPLOYMENT OPPORTUNITY CONSTRUCTION CONTRACT SPECIFICATIONS (EXECUTIVE ORDER 11246)

1. As used in these specifications:

   a. "Covered area" means the geographical area described in the solicitation from which this contract resulted;

   b. "Director" means Director, Office of Federal Contract Compliance Programs, United States Department of Labor, or any person to whom the Director delegates authority;

   c. "Employer identification number" means the Federal Social Security number used on the Employer's Quarterly Federal Tax Return, U.S. Treasury Department form 941;

   d. "Minority" includes:
      (i) Black (all persons having origins in any of the Black African racial groups not of Hispanic origin);
      (ii) Hispanic (all persons of Mexican, Puerto Rican, Cuban, Central or South American or other Spanish Culture or origin, regardless of race);

(iii) Asian and Pacific Islander (all persons having origins in any of the original peoples of the Far East, Southeast Asia, the Indian Subcontinent, or the Pacific Islands); and
(iv) American Indian or Alaskan Native (all persons having origins in any of the original peoples of the North America and maintaining identifiable tribal affiliations through membership and participation or community identification).

2. Whenever the Contractor, or any subcontractor at any tier, subcontracts a portion of the work involving any construction trade, it shall physically include in each subcontract in excess of $10,000 the provisions of these specifications and the Notice which contains the applicable goals for minority and female participation and which is set forth in the solicitations from which this contract resulted.

3. If the contractor, is participating (pursuant to 41 CFR 60-4.5) in a Hometown Plan approved by the U.S. Department of Labor in the covered area either individually or through an association, its affirmative action obligations on all work in the Plan area (including goals and timetables) shall be in accordance with that Plan for those trades which have unions participating in the Plan. Contractors must be able to demonstrate their participation in and compliance with the provisions of any such Hometown Plan. Each Contractor or Subcontractor participating in an approved Plan is individually required to comply with its obligations under the EEO clause, and to make a good faith effort to achieve each goal under the Plan in each trade in which it has employees. The overall good faith performance by other Contractors for Subcontractors toward a goal in an approved Plan does not excuse any covered Contractor's or Subcontractor's failure to take good faith efforts to achieve the Plan goals and timetables.

4. The Contractor shall implement the specific affirmative action standards provided in paragraphs 7 a. through p. of these specifications. The goals set forth in the solicitation from which this contract resulted are expressed as percentages of the total hours of employment and training of minority and female utilization the Contractor should reasonably be able to achieve in each construction trade in which it has employees in contractors performing construction work in geographical areas where they do not have a Federal or federally assisted construction contract shall apply the minority and female goals established for the geographical areas where the work is being performed. Goals are published periodically in the Federal Register in notice form and such notices may be obtained from any Office of Federal Contract Compliance Programs office or from Federal procurement contracting officers. The Contractor is expected to make substantially uniform progress in meeting its goals in each craft during the period specific.

5. Neither the provisions of any collective bargaining agreement, nor the failure by a union with whom the Contractor has a collective bargaining agreement, to refer either minorities or women shall excuse the Contractor's obligations under these specifications, Executive Order 11246, or the regulations promulgated pursuant, thereto.

6. In order for the non working training hours of apprentices and trainees to be counted in meeting the goals, such apprentices and trainees must be employed by the Contractor during the training period, and the Contractor must have made a commitment to employ the apprentices and trainees at the completion of their training, subject to the availability of

employment opportunities. Trainees must be trained pursuant to training programs approved by the U.S. Department of Labor.

7. The Contractor shall take specific affirmative actions to ensure equal employment opportunity. The evaluation of the Contractor's compliance with these specifications shall be based upon its effort to achieve maximum results from its actions. The Contractor shall document these efforts fully, and shall implement affirmative action steps at least as expensive as the following:

   a. Ensure and maintain a working environment free of harassment, intimidation, coercion at all sites, and in all facilities at which the Contractor's employees are assigned to work. The Contractor, when possible, will assign two or more women to each construction project. The Contractor shall specifically ensure that all foremen, superintendents, and other on-site supervisory personnel are aware of and carry out the Contractor's obligation to maintain such a working environment, with specific attention to minority or female individuals working at such sites or in such facilities.

   b. Establish and maintain a current list of minority and female recruitment sources provide written notification to minority and female recruitment sources and to community organizations when the Contractor or its unions have employment opportunities available, and maintain a record of the organization's responses.

   c. Maintain a current file of the names, addresses and telephone numbers of each minority and female off-the-street applicant and minority or female referral from a union, a recruitment sources or community organization and of what action was taken with respect to each such individual. If such individual was sent to the union hiring hall for referral and was not referred back to the Contractor by the union or, if referred, not employed by the Contractor, this shall be documented in the file with the reason therefore, along with whatever additional actions the Contractor may have taken.

   d. Provide immediate written notification to the Director when the union or unions with which the Contractor has a collective bargaining agreement has not referred to the Contractor a minority person or woman sent by the Contractor, or when the Contractor has other information that the union referral process has impeded the Contractor's efforts to meet its obligations.

   e. Develop on-the-job training opportunities and/or participate in training programs for the area which expressly include minorities and women, including upgrading programs and apprenticeship and trainee programs relevant to the Contractor's employment needs, especially those programs funded or approved by the Department of Labor. The Contractor shall provide notice of these programs to the sources complied under 7b above.

   f. Disseminate the Contractor's EEO policy by providing notice of the policy to unions and training programs and requesting their cooperation in assisting the Contractor in meeting its EEO obligations; by including in any policy manual and collective bargaining agreement; by publicizing it in the company newspaper, annual report, etc.; by specific review of the policy with all management personnel and with all minority and female

employees at least once a year; and by posting the company EEO policy on bulletin boards accessible to all employees at each location where construction work is performed.

g. Review, at least annually, the company's EEO policy and affirmative action obligations under these specifications with all employees having any responsibility for hiring, assignment, layoff, termination or other employment decisions including specific review of these items with on-site supervisory personnel such as Superintendents, General Foremen, etc., prior to the initiation of construction work at any job site. A written record shall be made and maintained identifying the time and place of these meetings, persons attending, subject matter discussed, and disposition of the subject matter.

h. Disseminate the Contractor's EEO policy externally by including it in any advertising in the news media, specifically including minority and female news media, and providing written notification to and discussing the Contractor's EEO policy with other Contractors and Subcontractors with whom the Contractor does or anticipates doing business.

i. Direct its recruitment, efforts, both oral and written, to minority, female and community organizations, to schools with minority and female students and to minority and female recruitment and training organizations serving the Contractor's recruitment area and employment needs. Not later than one month other training by any recruitment source, the Contractor shall send written notification to organizations such as the above, describing prior to the date for the acceptance of applications for apprenticeship or the openings, screening procedures, and tests to be used in the selection process.

j. Encourage present minority and female employees to recruit other minority persons and women and, where reasonable, provide after school, summer and vacation employment to minority and female youth both on site and in other areas of a Contractor's work force.

k. Validate all tests and other selection requirements where there is an obligation to do so under 41 CFR Part 60-3.

l. Conduct, at least annually, an inventory and evaluation at least of all minority and female personnel for promotional opportunities and encourage these employees to seek or to prepare for, through appropriate training, etc., such opportunities.

m. Ensure that seniority practices, job classifications, work assignments and other personnel practices, do not have a discriminatory effect by continually monitoring all personnel and employment related activities to ensure that the EEO policy and the Contractor's obligations under these specifications are being carried out.

n. Ensure that all facilities and company activities are non segregated except that separate or single-user toilet and necessary changing facilities shall be provided to assure privacy between the sexes.

o. Document and maintain a record of all solicitations of offers for subcontracts from minority and female construction contractors and suppliers, including circulation of

solicitation to minority and female contractor associations and other business associations.

p. Conduct a review, at least annually, of all supervisor's adherence to and performance under the Contractor's EEO policies and affirmative action obligations.

8. Contractors are encouraged to participate in voluntary associations which assist in fulfilling one or more of their affirmative action obligations (7 a through p.). The efforts of a contractor association, joint contractor-union, contractor-community, or other similar group of which the contractor is a member and participant, may be asserted as fulfilling any one or more of its obligations under 7 a through p. of these specifications provided that the contractor actively participates in the group, makes every effort to assure that the group has a positive impact on the employment of minorities and women in the industry, ensures that the concrete benefits of the program and reflected in the Contractor's minority and female work force participation, makes a good faith effort to meet its individual goals and timetables, and can provide access to documentation which demonstrates the effectiveness of actions take on behalf of the Contractor. The obligation to comply, however, is the Contractor's and failure of such a group to fulfill an obligation shall not be a defense for the Contractor's noncompliance.

9. A single goal for minorities and a separate single goal for women have been established. The Contractor, however, is required to provide equal employment opportunity and to take affirmative action for all minority groups, both make and female, and all women, both minority and non-minority. Consequently, the Contractor may be in violation of the Executive Order if a particular group is employed in a substantially disparate manner (for example, specific minority group of women is underutilized.)

10. The Contractor shall not use the goals and timetables or affirmative action even through the Contractor has achieved its goals for women generally, the Contractor may be in violation of the Executive Order if standards to discriminate against any person because of race, color, religion, sex, or national origin.

11. The Contractor shall not enter into any Subcontract with any person or firm debarred from Government contracts pursuant to Executive Order 11246.

12. The Contractor shall carry out such sanctions and penalties for violation of these specifications and of the Equal Opportunity Clause, including suspension, termination and cancellation of existing subcontracts as may be imposed or ordered pursuant to Executive Order 11246, as amended, and its implementation regulations by the Office of Federal Contract Compliance Programs. Any Contractor who fails to carry out such sanctions and penalties shall be in violation of these specifications and Executive Order 11246, as amended.

13. The Contractor, in fulfilling its obligations under these specifications, shall implement specific affirmative action steps, at least as extensive as those standards prescribed in paragraph 7 of these specifications, so as to achieve maximum results from its efforts to ensure equal employment opportunity. If the Contractor fails to comply with the

requirements of the Executive Order, the implementing regulations, or these specifications, the Director shall proceed in accordance with 41 CFR 60-4.6.

14. The Contractor shall designate a responsible official to monitor all employment related activity to ensure that the company EEO policy is being carried out, to submit reports relating to the provisions hereof as may be required by the Government and to keep records. Records shall at least include for each employee the name, address, telephone numbers, construction trade, union affiliation if any, employee identification number when assigned, social security number, race, sex, status (e.g. mechanic, apprentice, trainee, helper, or laborer), dates of changes in status, hours worked per week in the indicated trade, rate of pay, and location sat which the work was performed. Records be maintained in an easily understandable and retrievable form; however, to the degree that existing records satisfy this requirement, contractors shall not be required to maintain separate records.

15. Nothing herein provided shall be construed as a limitation upon the application of other laws which establish different standards of compliance or upon the application of requirements for the hiring of local or other area residents (e.g., those under the Public Works Employment Act of 1977 and the Community Development Block Grant Program).

End of GOALS FOR EMPLOYMENT OF FEMALES AND MINORITIES
Federally Required Contract Document

****

D. Disadvantaged Business Enterprise (DBE) Requirements The Department has established an annual Disadvantaged Business Enterprise goal to be achieved through race neutral means. This goal will be adjusted periodically and will be provided by Supplemental Provision. The Contractor shall comply with all provisions of this section regarding DBE participation and the Department's latest version of the Disadvantaged Business Enterprise Program Manual, said Manual being incorporated herein by reference. In the case of conflict between this Contract and said Manual, this Contract shall control. The Department reserves the right to adjust DBE goals on a project-by-project basis by addendum.

Policy. It is the Department's policy that DBEs as defined in 23 CFR Part 26 and referenced in the Transportation Equity Act for 21st Century of 1998, as amended from the Surface Transportation Uniform Relocation Assistance Act of 1987, and the Intermodal Surface Transportation Efficiency Act of 1991. The intent hereto remains to provide the maximum opportunity for DBEs to participate in the performance of contracts financed in whole or in part with federal funds.

The Department and its Contractors shall not discriminate on the basis of race, color, national origin, ancestry, sex, age, or disability in the award and performance of DOT assisted contracts.

Disadvantaged Business Enterprises are those so certified by the Maine Department of Transportation Civil Rights Office prior to bid opening date.

The Department has determined that elements of a good faith effort to meet the contract goal include but are not limited to the following:

1. Whether the Contractor advertised in general circulation, trade association, and minority/women's-focus media concerning the subcontracting opportunities;

2. Whether the Contractor provided written notice to a reasonable number of specific DBEs that their interest in the contract is being solicited;

3. Whether the Contractor followed up on initial solicitations of interest by contacting DBEs to determine with certainty whether the DBEs were interested;

4. Whether the Contractor selected portions of the work to be performed by DBEs in order to increase the likelihood of meeting the DBE goals;

5. Whether the Contractor provided interested DBEs with adequate information about the plans, specification and requirements of the contract;

6. Whether the Contractor negotiated in good faith with interested DBEs, not rejecting the DBE as unqualified without sound reasons based on a thorough investigation of their capabilities;

7. Whether the Contractor made efforts to assist interested DBEs with other appropriate technical/financial assistance required by the Department or Contractor;

8. Whether the Contractor effectively used the services of available minority/women's community organizations, minority/women's business assistance offices; and other organizations that provide assistance in the recruitment and placement of DBEs.

Substitutions of DBEs. The following may be acceptable reasons for Civil Rights Office approval of such a change order:

- The DBE defaults, voluntarily removes itself or is over-extended;
- The Department deletes portions of the work to by performed by the DBE.

It is not intended that the ability to negotiate a more advantageous contract with another certified DBE be considered a valid basis for such a change in DBE utilization once the DBE Bid Submission review has been passed. Any requests to alter the DBE commitment must be in writing and included with the change order.

Failure to carry out terms of this Standard Specification shall be treated as a violation of this contract and will result in contract sanctions which may include withholding of partial payments totaling the creditable dollars amount which would have been paid for said DBE participation, termination of this contract or other measures which may affect the ability of the Contractor to obtain Department contracts.

Copies of the Maine Department of Transportation's DBE Program may be obtained from:

Maine Department of Transportation
Civil Rights Office
#16 State House Station
Augusta, Maine 04333-0016
tel. (207) 624-3519

Quarterly Reporting Requirement. The Contractor must submit Semi-annual reports of actual dollars paid to Disadvantaged Business Enterprises (DBE's) on this Project to the MaineDOT Civil Rights Office by the end of the third week of April and October for the period covering the preceding six months considered Federal Fiscal Year periods. The reports will be submitted directly to the Civil Rights Office on the form provided in the latest version of the DBE Program Manual. Failure to submit the report by the deadline may result in a withholding of approval of partial payment estimates by the Department.

SECTION 3 - OTHER FEDERAL REQUIREMENTS

Unless expressly otherwise provided in the Bid Documents, the provisions contained in this Section 3 of this "Federal Contract Provisions Supplement" are hereby incorporated into the Bid Documents and Contract.

A. Buy America

If the cost of products purchased for permanent use in this project which are manufactured of steel, iron or the application of any coating to products of these materials exceeds 0.1 percent of the contract amount, or $2,500.00, whichever is greater, the products shall have been manufactured and the coating applied in the United States. The coating materials are not subject to this clause, only the application of the coating. In computing that amount, only the cost of the product and coating application cost will be included.

Ore, for the manufacture of steel or iron, may be from outside the United States; however, all other manufacturing processes of steel or iron must be in the United States to qualify as having been manufactured in the United States.

United States includes the 50 United States and any place subject to the jurisdiction thereof.

Products of steel include, but are not limited to, such products as structural steel, piles, guardrail, steel culverts, reinforcing steel, structural plate and steel supports for signs, luminaries and signals.

Products of iron include, but are not limited to, such products as cast iron grates.

Application of coatings include, but are not limited to, such applications as epoxy, galvanized and paint.

To assure compliance with this section, the Contractor shall submit a certification letter on its letterhead to the Department stating the following:

> "This is to certify that products made of steel, iron or the application of any coating to products of these materials whose costs are in excess of $2,500.00 or 0.1 percent of the original contract amount, whichever is greater, were manufactured and the coating, if one was required, was applied in the United States."

B. Materials

a. Convict Produced Materials References: 23 U.S.C. 114(b)(2), 23 CFR 635.417

Applicability: FHWA's prohibition against the use of convict material only applies to Federal-aid highways. Materials produced after July 1, 1991, by convict labor may only be incorporated in a Federal-aid highway construction project if: 1) such materials have been produced by convicts who are on parole, supervised release, or probation from a prison; or 2) such material has been produced in a qualified prison facility, e.g., prison industry, with the amount produced during any 12-month period, for use in Federal-aid projects, not exceeding the amount produced, for such use, during the 12-month period ending July 1, 1987.

Materials obtained from prison facilities (e.g., prison industries) are subject to the same requirements for Federal-aid participation that are imposed upon materials acquired from other sources. Materials manufactured or produced by convict labor will be given no preferential treatment.

The preferred method of obtaining materials for a project is through normal contracting procedures which require the contractor to furnish all materials to be incorporated in the work. The contractor selects the source, public or private, from which the materials are to be obtained (23 CFR 635.407). Prison industries are prohibited from bidding on projects directly (23 CFR 635.112e), but may act as material supplier to construction contractors.

Prison materials may also be approved as State-furnished material. However, since public agencies may not bid in competition with private firms, direct acquisition of materials from a prison industry for use as State-furnished material is subject to a public interest finding with the Division Administrator's concurrence (23 CFR 635.407d). Selection of materials produced by convict labor as State-furnished materials for mandatory use should be cleared prior to the submittal of the Plans Specifications & Estimates (PS&E).

b. Patented/Proprietary Products References: 23 U.S.C. 112, 23 CFR 635.411

FHWA will not participate, directly or indirectly, in payment for any premium or royalty on any patented or proprietary material, specification, or process specifically set forth in the plans and specifications for a project, unless:

- the item is purchased or obtained through competitive bidding with equally suitable unpatented items,
- the STA certifies either that the proprietary or patented item is essential for synchronization with the existing highway facilities or that no equally suitable alternative exists, or
- the item is used for research or for a special type of construction on relatively short sections of road for experimental purposes. States should follow FHWA's procedures for "Construction Projects Incorporating Experimental Features" (expermnt.htm) for the submittal of work plans and evaluations.

The primary purpose of the policy is to have competition in selection of materials and allow for development of new materials and products. The policy further permits materials and products that are judged equal may be bid under generic specifications. If only patented or proprietary products are acceptable, they shall be bid as alternatives with all, or at least a

reasonable number of, acceptable materials or products listed; and the Division Administrator may approve a single source if it can be found that its utilization is in the public interest.

Trade names are generally the key to identifying patented or proprietary materials. Trade name examples include 3M, Corten, etc. Generally, products identified by their brand or trade name are not to be specified without an "or equal" phrase, and, if trade names are used, all, or at least a reasonable number of acceptable "equal" materials or products should be listed. The licensing of several suppliers to produce a product does not change the fact that it is a single product and should not be specified to the exclusion of other equally suitable products.

c. State Preference References: 23 U.S.C. 112, 23 CFR 635.409

Materials produced within Maine shall not be favored to the exclusion of comparable materials produced outside of Maine. State preference clauses give particular advantage to the designated source and thus restrict competition. Therefore, State preference provisions shall not be used on any Federal-aid construction projects.

This policy also applies to State preference actions against materials of foreign origin, except as otherwise permitted by Federal law. Thus, States cannot give preference to in-State material sources over foreign material sources. Under the Buy America provisions, the States are permitted to expand the Buy America restrictions provided that the STA is legally authorized under State law to impose more stringent requirements.

d. State Owned/Furnished/Designated Materials References: 23 U.S.C. 112, 23 CFR 635.407

Current FHWA policy requires that the contractor must furnish all materials to be incorporated in the work, and the contractor shall be permitted to select the sources from which the materials are to be obtained. Exceptions to this requirement may be made when there is a definite finding, by MaineDOT and concurred in by Federal Highway Administration's (FHWA) Division Administrator, that it is in the public interest to require the contractor to use materials furnished by the MaineDOT or from sources designated by MaineDOT. The exception policy can best be understood by separating State-furnished materials into the categories of manufactured materials and local natural materials.

Manufactured Materials When the use of State-furnished manufactured materials is approved based on a public interest finding, such use must be made mandatory. The optional use of State-furnished manufactured materials is in violation of our policy prohibiting public agencies from competing with private firms. Manufactured materials to be furnished by MaineDOT must be acquired through competitive bidding, unless there is a public interest finding for another method, and concurred in by FHWA's Division Administrator.

Local Natural Materials When MaineDOT owns or controls a local natural materials source such as a borrow pit or a stockpile of salvaged pavement material, etc., the materials may be designated for either optional or mandatory use; however, mandatory use will require a public interest finding (PIF) and FHWA's Division Administrator's concurrence.

In order to permit prospective bidders to properly prepare their bids, the location, cost, and any conditions to be met for obtaining materials that are made available to the contractor shall be stated in the bidding documents.

Mandatory Disposal Sites Normally, the disposal site for surplus excavated materials is to be of the contractor's choosing; although, an optional site(s) may be shown in the contract provisions. A mandatory site shall be specified when there is a finding by MaineDOT, with the concurrence of the Division Administrator, that such placement is the most economical or that the environment would be substantially enhanced without excessive cost. Discussion of the mandatory use of a disposal site in the environmental document may serve as the basis for the public interest finding.

Summarizing FHWA policy for the mandatory use of borrow or disposal sites:

- mandatory use of either requires a public interest finding and FHWA's Division Administrator's concurrence,
- mandatory use of either may be based on environmental consideration where the environment will be substantially enhanced without excessive additional cost, and
- where the use is based on environmental considerations, the discussion in the environmental document may be used as the basis for the public interest finding.

Factors to justify a public interest finding should include such items as cost effectiveness, system integrity, and local shortages of material.

C. Standard FHWA Contract Provisions - FHWA 1273

Unless expressly otherwise provided in the Bid Documents, the following "Required Contract Provisions, Federal Aid Construction Contracts", FHWA-1273, are hereby incorporated into the Bid Documents and Contract.
****

Start of FHWA 1273 REQUIRED CONTRACT PROVISIONS
FEDERAL-AID CONSTRUCTION CONTRACTS (As revised through May 1, 2012)

FHWA-1273 -- Revised May 1, 2012

REQUIRED CONTRACT PROVISIONS
FEDERAL-AID CONSTRUCTION CONTRACTS

I. General
II. Nondiscrimination

III. Nonsegregated Facilities
IV. Davis-Bacon and Related Act Provisions
V. Contract Work Hours and Safety Standards Act Provisions
VI. Subletting or Assigning the Contract
VII. Safety: Accident Prevention
VIII. False Statements Concerning Highway Projects
IX. Implementation of Clean Air Act and Federal Water Pollution Control Act
X. Compliance with Governmentwide Suspension and Debarment Requirements
XI. Certification Regarding Use of Contract Funds for Lobbying

ATTACHMENTS

A. Employment and Materials Preference for Appalachian Development Highway System or Appalachian Local Access Road Contracts (included in Appalachian contracts only)

I. GENERAL

1. Form FHWA-1273 must be physically incorporated in each construction contract funded under Title 23 (excluding emergency contracts solely intended for debris removal). The contractor (or subcontractor) must insert this form in each subcontract and further require its inclusion in all lower tier subcontracts (excluding purchase orders, rental agreements and other agreements for supplies or services).

The applicable requirements of Form FHWA-1273 are incorporated by reference for work done under any purchase order, rental agreement or agreement for other services. The prime contractor shall be responsible for compliance by any subcontractor, lower-tier subcontractor or service provider.

Form FHWA-1273 must be included in all Federal-aid design-build contracts, in all subcontracts and in lower tier subcontracts (excluding subcontracts for design services, purchase orders, rental agreements and other agreements for supplies or services). The design-builder shall be responsible for compliance by any subcontractor, lower-tier subcontractor or service provider.

Contracting agencies may reference Form FHWA-1273 in bid proposal or request for proposal documents, however, the Form FHWA-1273 must be physically incorporated (not referenced) in all contracts, subcontracts and lower-tier subcontracts (excluding purchase orders, rental agreements and other agreements for supplies or services related to a construction contract).

2. Subject to the applicability criteria noted in the following sections, these contract provisions shall apply to all work performed on the contract by the contractor's own organization and with the assistance of workers under the contractor's immediate superintendence and to all work performed on the contract by piecework, station work, or by subcontract.

3. A breach of any of the stipulations contained in these Required Contract Provisions may be sufficient grounds for withholding of progress payments, withholding of final payment, termination of the contract, suspension / debarment or any other action determined to be appropriate by the contracting agency and FHWA.

4. Selection of Labor: During the performance of this contract, the contractor shall not use convict labor for any purpose within the limits of a construction project on a Federal-aid highway unless it is labor performed by convicts who are on parole, supervised release, or probation. The term Federal-aid highway does not include roadways functionally classified as local roads or rural minor collectors.

II. NONDISCRIMINATION

The provisions of this section related to 23 CFR Part 230 are applicable to all Federal-aid construction contracts and to all related construction subcontracts of $10,000 or more. The provisions of 23 CFR Part 230 are not applicable to material supply, engineering, or architectural service contracts.

In addition, the contractor and all subcontractors must comply with the following policies: Executive Order 11246, 41 CFR 60, 29 CFR 1625-1627, Title 23 USC Section 140, the Rehabilitation Act of 1973, as amended (29 USC 794), Title VI of the Civil Rights Act of 1964, as amended, and related regulations including 49 CFR Parts 21, 26 and 27; and 23 CFR Parts 200, 230, and 633.

The contractor and all subcontractors must comply with: the requirements of the Equal Opportunity Clause in 41 CFR 60-1.4(b) and, for all construction contracts exceeding $10,000, the Standard Federal Equal Employment Opportunity Construction Contract Specifications in 41 CFR 60-4.3.

Note: The U.S. Department of Labor has exclusive authority to determine compliance with Executive Order 11246 and the policies of the Secretary of Labor including 41 CFR 60, and 29 CFR 1625-1627. The contracting agency and the FHWA have the authority and the responsibility to ensure compliance with Title 23 USC Section 140, the Rehabilitation Act of 1973, as amended (29 USC 794), and Title VI of the Civil Rights Act of 1964, as amended, and related regulations including 49 CFR Parts 21, 26 and 27; and 23 CFR Parts 200, 230, and 633.

The following provision is adopted from 23 CFR 230, Appendix A, with appropriate revisions to conform to the U.S. Department of Labor (US DOL) and FHWA requirements.

1. Equal Employment Opportunity: Equal employment opportunity (EEO) requirements not to discriminate and to take affirmative action to assure equal opportunity as set forth under laws, executive orders, rules, regulations (28 CFR 35, 29 CFR 1630, 29 CFR 1625-1627, 41 CFR 60 and 49 CFR 27) and orders of the Secretary of Labor as modified by the provisions prescribed herein, and imposed pursuant to 23 U.S.C. 140 shall constitute the EEO and specific affirmative action standards for the contractor's project activities under this contract. The provisions of the Americans with Disabilities Act of 1990 (42 U.S.C. 12101 et seq.) set forth under 28 CFR 35 and 29 CFR 1630 are incorporated by reference in this contract. In the execution of this contract, the contractor agrees to comply with the following minimum specific requirement activities of EEO:

a. The contractor will work with the contracting agency and the Federal Government to ensure that it has made every good faith effort to provide equal opportunity with respect to all of its terms and conditions of employment and in their review of activities under the contract.

b. The contractor will accept as its operating policy the following statement:

"It is the policy of this Company to assure that applicants are employed, and that employees are treated during employment, without regard to their race, religion, sex, color, national origin, age or disability. Such action shall include: employment, upgrading, demotion, or transfer; recruitment or recruitment advertising; layoff or termination; rates of pay or other forms of compensation; and selection for training, including apprenticeship, pre-apprenticeship, and/or on-the-job training."

2. EEO Officer: The contractor will designate and make known to the contracting officers an EEO Officer who will have the responsibility for and must be capable of effectively administering and promoting an active EEO program and who must be assigned adequate authority and responsibility to do so.

3. Dissemination of Policy: All members of the contractor's staff who are authorized to hire, supervise, promote, and discharge employees, or who recommend such action, or who are substantially involved in such action, will be made fully cognizant of, and will implement, the contractor's EEO policy and contractual responsibilities to provide EEO in each grade and classification of employment. To ensure that the above agreement will be met, the following actions will be taken as a minimum:

a. Periodic meetings of supervisory and personnel office employees will be conducted before the start of work and then not less often than once every six months, at which time the contractor's EEO policy and its implementation will be reviewed and explained. The meetings will be conducted by the EEO Officer.

b. All new supervisory or personnel office employees will be given a thorough indoctrination by the EEO Officer, covering all major aspects of the contractor's EEO obligations within thirty days following their reporting for duty with the contractor.

c. All personnel who are engaged in direct recruitment for the project will be instructed by the EEO Officer in the contractor's procedures for locating and hiring minorities and women.

d. Notices and posters setting forth the contractor's EEO policy will be placed in areas readily accessible to employees, applicants for employment and potential employees.

e. The contractor's EEO policy and the procedures to implement such policy will be brought to the attention of employees by means of meetings, employee handbooks, or other appropriate means.

4. Recruitment: When advertising for employees, the contractor will include in all advertisements for employees the notation: "An Equal Opportunity Employer." All such advertisements will be placed in publications having a large circulation among minorities and women in the area from which the project work force would normally be derived.

a. The contractor will, unless precluded by a valid bargaining agreement, conduct systematic and direct recruitment through public and private employee referral sources likely to yield

qualified minorities and women. To meet this requirement, the contractor will identify sources of potential minority group employees, and establish with such identified sources procedures whereby minority and women applicants may be referred to the contractor for employment consideration.

b. In the event the contractor has a valid bargaining agreement providing for exclusive hiring hall referrals, the contractor is expected to observe the provisions of that agreement to the extent that the system meets the contractor's compliance with EEO contract provisions. Where implementation of such an agreement has the effect of discriminating against minorities or women, or obligates the contractor to do the same, such implementation violates Federal nondiscrimination provisions.

c. The contractor will encourage its present employees to refer minorities and women as applicants for employment. Information and procedures with regard to referring such applicants will be discussed with employees.

5. Personnel Actions: Wages, working conditions, and employee benefits shall be established and administered, and personnel actions of every type, including hiring, upgrading, promotion, transfer, demotion, layoff, and termination, shall be taken without regard to race, color, religion, sex, national origin, age or disability. The following procedures shall be followed:

a. The contractor will conduct periodic inspections of project sites to insure that working conditions and employee facilities do not indicate discriminatory treatment of project site personnel.

b. The contractor will periodically evaluate the spread of wages paid within each classification to determine any evidence of discriminatory wage practices.

c. The contractor will periodically review selected personnel actions in depth to determine whether there is evidence of discrimination. Where evidence is found, the contractor will promptly take corrective action. If the review indicates that the discrimination may extend beyond the actions reviewed, such corrective action shall include all affected persons.

d. The contractor will promptly investigate all complaints of alleged discrimination made to the contractor in connection with its obligations under this contract, will attempt to resolve such complaints, and will take appropriate corrective action within a reasonable time. If the investigation indicates that the discrimination may affect persons other than the complainant, such corrective action shall include such other persons. Upon completion of each investigation, the contractor will inform every complainant of all of their avenues of appeal.

6. Training and Promotion:

a. The contractor will assist in locating, qualifying, and increasing the skills of minorities and women who are applicants for employment or current employees. Such efforts should be aimed at developing full journey level status employees in the type of trade or job classification involved.

b. Consistent with the contractor's work force requirements and as permissible under Federal and State regulations, the contractor shall make full use of training programs, i.e., apprenticeship, and on-the-job training programs for the geographical area of contract performance. In the event a special provision for training is provided under this contract, this subparagraph will be superseded as indicated in the special provision. The contracting agency may reserve training positions for persons who receive welfare assistance in accordance with 23 U.S.C. 140(a).

c. The contractor will advise employees and applicants for employment of available training programs and entrance requirements for each.

d. The contractor will periodically review the training and promotion potential of employees who are minorities and women and will encourage eligible employees to apply for such training and promotion.

7. Unions: If the contractor relies in whole or in part upon unions as a source of employees, the contractor will use good faith efforts to obtain the cooperation of such unions to increase opportunities for minorities and women. Actions by the contractor, either directly or through a contractor's association acting as agent, will include the procedures set forth below:

a. The contractor will use good faith efforts to develop, in cooperation with the unions, joint training programs aimed toward qualifying more minorities and women for membership in the unions and increasing the skills of minorities and women so that they may qualify for higher paying employment.

b. The contractor will use good faith efforts to incorporate an EEO clause into each union agreement to the end that such union will be contractually bound to refer applicants without regard to their race, color, religion, sex, national origin, age or disability.

c. The contractor is to obtain information as to the referral practices and policies of the labor union except that to the extent such information is within the exclusive possession of the labor union and such labor union refuses to furnish such information to the contractor, the contractor shall so certify to the contracting agency and shall set forth what efforts have been made to obtain such information.

d. In the event the union is unable to provide the contractor with a reasonable flow of referrals within the time limit set forth in the collective bargaining agreement, the contractor will, through independent recruitment efforts, fill the employment vacancies without regard to race, color, religion, sex, national origin, age or disability; making full efforts to obtain qualified and/or qualifiable minorities and women. The failure of a union to provide sufficient referrals (even though it is obligated to provide exclusive referrals under the terms of a collective bargaining agreement) does not relieve the contractor from the requirements of this paragraph. In the event the union referral practice prevents the contractor from meeting the obligations pursuant to Executive Order 11246, as amended, and these special provisions, such contractor shall immediately notify the contracting agency.

8. Reasonable Accommodation for Applicants / Employees with Disabilities: The contractor must be familiar with the requirements for and comply with the Americans with

Disabilities Act and all rules and regulations established there under. Employers must provide reasonable accommodation in all employment activities unless to do so would cause an undue hardship.

9. Selection of Subcontractors, Procurement of Materials and Leasing of Equipment: The contractor shall not discriminate on the grounds of race, color, religion, sex, national origin, age or disability in the selection and retention of subcontractors, including procurement of materials and leases of equipment. The contractor shall take all necessary and reasonable steps to ensure nondiscrimination in the administration of this contract.

a. The contractor shall notify all potential subcontractors and suppliers and lessors of their EEO obligations under this contract.

b. The contractor will use good faith efforts to ensure subcontractor compliance with their EEO obligations.

10. Assurance Required by 49 CFR 26.13(b):

a. The requirements of 49 CFR Part 26 and the State DOT's U.S. DOT-approved DBE program are incorporated by reference.

b. The contractor or subcontractor shall not discriminate on the basis of race, color, national origin, or sex in the performance of this contract. The contractor shall carry out applicable requirements of 49 CFR Part 26 in the award and administration of DOT-assisted contracts. Failure by the contractor to carry out these requirements is a material breach of this contract, which may result in the termination of this contract or such other remedy as the contracting agency deems appropriate.

11. Records and Reports: The contractor shall keep such records as necessary to document compliance with the EEO requirements. Such records shall be retained for a period of three years following the date of the final payment to the contractor for all contract work and shall be available at reasonable times and places for inspection by authorized representatives of the contracting agency and the FHWA.

a. The records kept by the contractor shall document the following:

(1) The number and work hours of minority and non-minority group members and women employed in each work classification on the project;

(2) The progress and efforts being made in cooperation with unions, when applicable, to increase employment opportunities for minorities and women; and

(3) The progress and efforts being made in locating, hiring, training, qualifying, and upgrading minorities and women;

b. The contractors and subcontractors will submit an annual report to the contracting agency each July for the duration of the project, indicating the number of minority, women, and non-

minority group employees currently engaged in each work classification required by the contract work. This information is to be reported on Form FHWA-1391. The staffing data should represent the project work force on board in all or any part of the last payroll period preceding the end of July. If on-the-job training is being required by special provision, the contractor will be required to collect and report training data. The employment data should reflect the work force on board during all or any part of the last payroll period preceding the end of July.

III. NONSEGREGATED FACILITIES

This provision is applicable to all Federal-aid construction contracts and to all related construction subcontracts of $10,000 or more.

The contractor must ensure that facilities provided for employees are provided in such a manner that segregation on the basis of race, color, religion, sex, or national origin cannot result. The contractor may neither require such segregated use by written or oral policies nor tolerate such use by employee custom. The contractor's obligation extends further to ensure that its employees are not assigned to perform their services at any location, under the contractor's control, where the facilities are segregated. The term "facilities" includes waiting rooms, work areas, restaurants and other eating areas, time clocks, restrooms, washrooms, locker rooms, and other storage or dressing areas, parking lots, drinking fountains, recreation or entertainment areas, transportation, and housing provided for employees. The contractor shall provide separate or single-user restrooms and necessary dressing or sleeping areas to assure privacy between sexes.

IV. DAVIS-BACON AND RELATED ACT PROVISIONS

This section is applicable to all Federal-aid construction projects exceeding $2,000 and to all related subcontracts and lower-tier subcontracts (regardless of subcontract size). The requirements apply to all projects located within the right-of-way of a roadway that is functionally classified as Federal-aid highway. This excludes roadways functionally classified as local roads or rural minor collectors, which are exempt. Contracting agencies may elect to apply these requirements to other projects.

The following provisions are from the U.S. Department of Labor regulations in 29 CFR 5.5 “Contract provisions and related matters” with minor revisions to conform to the FHWA-1273 format and FHWA program requirements.

1. Minimum wages

a. All laborers and mechanics employed or working upon the site of the work, will be paid unconditionally and not less often than once a week, and without subsequent deduction or rebate on any account (except such payroll deductions as are permitted by regulations issued by the Secretary of Labor under the Copeland Act (29 CFR part 3)), the full amount of wages and bona fide fringe benefits (or cash equivalents thereof) due at time of payment computed at rates not less than those contained in the wage determination of the Secretary of Labor which is attached hereto and made a part hereof, regardless of any contractual relationship which may be alleged to exist between the contractor and such laborers and mechanics.

Contributions made or costs reasonably anticipated for bona fide fringe benefits under section 1(b)(2) of the Davis-Bacon Act on behalf of laborers or mechanics are considered wages paid to

such laborers or mechanics, subject to the provisions of paragraph 1.d. of this section; also, regular contributions made or costs incurred for more than a weekly period (but not less often than quarterly) under plans, funds, or programs which cover the particular weekly period, are deemed to be constructively made or incurred during such weekly period. Such laborers and mechanics shall be paid the appropriate wage rate and fringe benefits on the wage determination for the classification of work actually performed, without regard to skill, except as provided in 29 CFR 5.5(a)(4). Laborers or mechanics performing work in more than one classification may be compensated at the rate specified for each classification for the time actually worked therein: Provided, That the employer's payroll records accurately set forth the time spent in each classification in which work is performed. The wage determination (including any additional classification and wage rates conformed under paragraph 1.b. of this section) and the Davis-Bacon poster (WH–1321) shall be posted at all times by the contractor and its subcontractors at the site of the work in a prominent and accessible place where it can be easily seen by the workers.

b. (1) The contracting officer shall require that any class of laborers or mechanics, including helpers, which is not listed in the wage determination and which is to be employed under the contract shall be classified in conformance with the wage determination. The contracting officer shall approve an additional classification and wage rate and fringe benefits therefore only when the following criteria have been met:

(i) The work to be performed by the classification requested is not performed by a classification in the wage determination; and

(ii) The classification is utilized in the area by the construction industry; and

(iii) The proposed wage rate, including any bona fide fringe benefits, bears a reasonable relationship to the wage rates contained in the wage determination.

(2) If the contractor and the laborers and mechanics to be employed in the classification (if known), or their representatives, and the contracting officer agree on the classification and wage rate (including the amount designated for fringe benefits where appropriate), a report of the action taken shall be sent by the contracting officer to the Administrator of the Wage and Hour Division, Employment Standards Administration, U.S. Department of Labor, Washington, DC 20210. The Administrator, or an authorized representative, will approve, modify, or disapprove every additional classification action within 30 days of receipt and so advise the contracting officer or will notify the contracting officer within the 30-day period that additional time is necessary.

(3) In the event the contractor, the laborers or mechanics to be employed in the classification or their representatives, and the contracting officer do not agree on the proposed classification and wage rate (including the amount designated for fringe benefits, where appropriate), the contracting officer shall refer the questions, including the views of all interested parties and the recommendation of the contracting officer, to the Wage and Hour Administrator for determination. The Wage and Hour Administrator, or an authorized representative, will issue a determination within 30 days of receipt and so advise the contracting officer or will notify the contracting officer within the 30-day period that additional time is necessary.

(4) The wage rate (including fringe benefits where appropriate) determined pursuant to paragraphs 1.b.(2) or 1.b.(3) of this section, shall be paid to all workers performing work in the

classification under this contract from the first day on which work is performed in the classification.

c. Whenever the minimum wage rate prescribed in the contract for a class of laborers or mechanics includes a fringe benefit which is not expressed as an hourly rate, the contractor shall either pay the benefit as stated in the wage determination or shall pay another bona fide fringe benefit or an hourly cash equivalent thereof.

d. If the contractor does not make payments to a trustee or other third person, the contractor may consider as part of the wages of any laborer or mechanic the amount of any costs reasonably anticipated in providing bona fide fringe benefits under a plan or program, Provided, That the Secretary of Labor has found, upon the written request of the contractor, that the applicable standards of the Davis-Bacon Act have been met. The Secretary of Labor may require the contractor to set aside in a separate account assets for the meeting of obligations under the plan or program.

2. Withholding

The contracting agency shall upon its own action or upon written request of an authorized representative of the Department of Labor, withhold or cause to be withheld from the contractor under this contract, or any other Federal contract with the same prime contractor, or any other federally-assisted contract subject to Davis-Bacon prevailing wage requirements, which is held by the same prime contractor, so much of the accrued payments or advances as may be considered necessary to pay laborers and mechanics, including apprentices, trainees, and helpers, employed by the contractor or any subcontractor the full amount of wages required by the contract. In the event of failure to pay any laborer or mechanic, including any apprentice, trainee, or helper, employed or working on the site of the work, all or part of the wages required by the contract, the contracting agency may, after written notice to the contractor, take such action as may be necessary to cause the suspension of any further payment, advance, or guarantee of funds until such violations have ceased.

3. Payrolls and basic records

a. Payrolls and basic records relating thereto shall be maintained by the contractor during the course of the work and preserved for a period of three years thereafter for all laborers and mechanics working at the site of the work. Such records shall contain the name, address, and social security number of each such worker, his or her correct classification, hourly rates of wages paid (including rates of contributions or costs anticipated for bona fide fringe benefits or cash equivalents thereof of the types described in section 1(b)(2)(B) of the Davis-Bacon Act), daily and weekly number of hours worked, deductions made and actual wages paid. Whenever the Secretary of Labor has found under 29 CFR 5.5(a)(1)(iv) that the wages of any laborer or mechanic include the amount of any costs reasonably anticipated in providing benefits under a plan or program described in section 1(b)(2)(B) of the Davis-Bacon Act, the contractor shall maintain records which show that the commitment to provide such benefits is enforceable, that the plan or program is financially responsible, and that the plan or program has been communicated in writing to the laborers or mechanics affected, and records which show the costs anticipated or the actual cost incurred in providing such benefits. Contractors employing apprentices or trainees under approved programs shall maintain written evidence of the

registration of apprenticeship programs and certification of trainee programs, the registration of the apprentices and trainees, and the ratios and wage rates prescribed in the applicable programs.

b. (1) The contractor shall submit weekly for each week in which any contract work is performed a copy of all payrolls to the contracting agency. The payrolls submitted shall set out accurately and completely all of the information required to be maintained under 29 CFR 5.5(a)(3)(i), except that full social security numbers and home addresses shall not be included on weekly transmittals. Instead the payrolls shall only need to include an individually identifying number for each employee (e.g. , the last four digits of the employee's social security number). The required weekly payroll information may be submitted in any form desired. Optional Form WH–347 is available for this purpose from the Wage and Hour Division Web site at http://www.dol.gov/esa/whd/forms/wh347instr.htm or its successor site. The prime contractor is responsible for the submission of copies of payrolls by all subcontractors. Contractors and subcontractors shall maintain the full social security number and current address of each covered worker, and shall provide them upon request to the contracting agency for transmission to the State DOT, the FHWA or the Wage and Hour Division of the Department of Labor for purposes of an investigation or audit of compliance with prevailing wage requirements. It is not a violation of this section for a prime contractor to require a subcontractor to provide addresses and social security numbers to the prime contractor for its own records, without weekly submission to the contracting agency..

(2) Each payroll submitted shall be accompanied by a “Statement of Compliance,” signed by the contractor or subcontractor or his or her agent who pays or supervises the payment of the persons employed under the contract and shall certify the following:

(i) That the payroll for the payroll period contains the information required to be provided under §5.5 (a)(3)(ii) of Regulations, 29 CFR part 5, the appropriate information is being maintained under §5.5 (a)(3)(i) of Regulations, 29 CFR part 5, and that such information is correct and complete;

(ii) That each laborer or mechanic (including each helper, apprentice, and trainee) employed on the contract during the payroll period has been paid the full weekly wages earned, without rebate, either directly or indirectly, and that no deductions have been made either directly or indirectly from the full wages earned, other than permissible deductions as set forth in Regulations, 29 CFR part 3;

(iii) That each laborer or mechanic has been paid not less than the applicable wage rates and fringe benefits or cash equivalents for the classification of work performed, as specified in the applicable wage determination incorporated into the contract.

(3) The weekly submission of a properly executed certification set forth on the reverse side of Optional Form WH–347 shall satisfy the requirement for submission of the “Statement of Compliance” required by paragraph 3.b.(2) of this section.

(4) The falsification of any of the above certifications may subject the contractor or subcontractor to civil or criminal prosecution under section 1001 of title 18 and section 231 of title 31 of the United States Code.

c. The contractor or subcontractor shall make the records required under paragraph 3.a. of this section available for inspection, copying, or transcription by authorized representatives of the

contracting agency, the State DOT, the FHWA, or the Department of Labor, and shall permit such representatives to interview employees during working hours on the job. If the contractor or subcontractor fails to submit the required records or to make them available, the FHWA may, after written notice to the contractor, the contracting agency or the State DOT, take such action as may be necessary to cause the suspension of any further payment, advance, or guarantee of funds. Furthermore, failure to submit the required records upon request or to make such records available may be grounds for debarment action pursuant to 29 CFR 5.12.

4. Apprentices and trainees

a. Apprentices (programs of the USDOL).

Apprentices will be permitted to work at less than the predetermined rate for the work they performed when they are employed pursuant to and individually registered in a bona fide apprenticeship program registered with the U.S. Department of Labor, Employment and Training Administration, Office of Apprenticeship Training, Employer and Labor Services, or with a State Apprenticeship Agency recognized by the Office, or if a person is employed in his or her first 90 days of probationary employment as an apprentice in such an apprenticeship program, who is not individually registered in the program, but who has been certified by the Office of Apprenticeship Training, Employer and Labor Services or a State Apprenticeship Agency (where appropriate) to be eligible for probationary employment as an apprentice.

The allowable ratio of apprentices to journeymen on the job site in any craft classification shall not be greater than the ratio permitted to the contractor as to the entire work force under the registered program. Any worker listed on a payroll at an apprentice wage rate, who is not registered or otherwise employed as stated above, shall be paid not less than the applicable wage rate on the wage determination for the classification of work actually performed. In addition, any apprentice performing work on the job site in excess of the ratio permitted under the registered program shall be paid not less than the applicable wage rate on the wage determination for the work actually performed. Where a contractor is performing construction on a project in a locality other than that in which its program is registered, the ratios and wage rates (expressed in percentages of the journeyman's hourly rate) specified in the contractor's or subcontractor's registered program shall be observed.

Every apprentice must be paid at not less than the rate specified in the registered program for the apprentice's level of progress, expressed as a percentage of the journeymen hourly rate specified in the applicable wage determination. Apprentices shall be paid fringe benefits in accordance with the provisions of the apprenticeship program. If the apprenticeship program does not specify fringe benefits, apprentices must be paid the full amount of fringe benefits listed on the wage determination for the applicable classification. If the Administrator determines that a different practice prevails for the applicable apprentice classification, fringes shall be paid in accordance with that determination.

In the event the Office of Apprenticeship Training, Employer and Labor Services, or a State Apprenticeship Agency recognized by the Office, withdraws approval of an apprenticeship program, the contractor will no longer be permitted to utilize apprentices at less than the applicable predetermined rate for the work performed until an acceptable program is approved.

b. Trainees (programs of the USDOL).

Except as provided in 29 CFR 5.16, trainees will not be permitted to work at less than the predetermined rate for the work performed unless they are employed pursuant to and individually registered in a program which has received prior approval, evidenced by formal certification by the U.S. Department of Labor, Employment and Training Administration.

The ratio of trainees to journeymen on the job site shall not be greater than permitted under the plan approved by the Employment and Training Administration.

Every trainee must be paid at not less than the rate specified in the approved program for the trainee's level of progress, expressed as a percentage of the journeyman hourly rate specified in the applicable wage determination. Trainees shall be paid fringe benefits in accordance with the provisions of the trainee program. If the trainee program does not mention fringe benefits, trainees shall be paid the full amount of fringe benefits listed on the wage determination unless the Administrator of the Wage and Hour Division determines that there is an apprenticeship program associated with the corresponding journeyman wage rate on the wage determination which provides for less than full fringe benefits for apprentices. Any employee listed on the payroll at a trainee rate who is not registered and participating in a training plan approved by the Employment and Training Administration shall be paid not less than the applicable wage rate on the wage determination for the classification of work actually performed. In addition, any trainee performing work on the job site in excess of the ratio permitted under the registered program shall be paid not less than the applicable wage rate on the wage determination for the work actually performed.

In the event the Employment and Training Administration withdraws approval of a training program, the contractor will no longer be permitted to utilize trainees at less than the applicable predetermined rate for the work performed until an acceptable program is approved.

c. Equal employment opportunity. The utilization of apprentices, trainees and journeymen under this part shall be in conformity with the equal employment opportunity requirements of Executive Order 11246, as amended, and 29 CFR part 30.

d. Apprentices and Trainees (programs of the U.S. DOT).

Apprentices and trainees working under apprenticeship and skill training programs which have been certified by the Secretary of Transportation as promoting EEO in connection with Federal-aid highway construction programs are not subject to the requirements of paragraph 4 of this Section IV. The straight time hourly wage rates for apprentices and trainees under such programs will be established by the particular programs. The ratio of apprentices and trainees to journeymen shall not be greater than permitted by the terms of the particular program.

5. Compliance with Copeland Act requirements. The contractor shall comply with the requirements of 29 CFR part 3, which are incorporated by reference in this contract.

6. Subcontracts. The contractor or subcontractor shall insert Form FHWA-1273 in any subcontracts and also require the subcontractors to include Form FHWA-1273 in any lower tier subcontracts. The prime contractor shall be responsible for the compliance by any subcontractor or lower tier subcontractor with all the contract clauses in 29 CFR 5.5.

7. Contract termination: debarment. A breach of the contract clauses in 29 CFR 5.5 may be grounds for termination of the contract, and for debarment as a contractor and a subcontractor as provided in 29 CFR 5.12.

8. Compliance with Davis-Bacon and Related Act requirements. All rulings and interpretations of the Davis-Bacon and Related Acts contained in 29 CFR parts 1, 3, and 5 are herein incorporated by reference in this contract.

9. Disputes concerning labor standards. Disputes arising out of the labor standards provisions of this contract shall not be subject to the general disputes clause of this contract. Such disputes shall be resolved in accordance with the procedures of the Department of Labor set forth in 29 CFR parts 5, 6, and 7. Disputes within the meaning of this clause include disputes between the contractor (or any of its subcontractors) and the contracting agency, the U.S. Department of Labor, or the employees or their representatives.

10. Certification of eligibility.

a. By entering into this contract, the contractor certifies that neither it (nor he or she) nor any person or firm who has an interest in the contractor's firm is a person or firm ineligible to be awarded Government contracts by virtue of section 3(a) of the Davis-Bacon Act or 29 CFR 5.12(a)(1).

b. No part of this contract shall be subcontracted to any person or firm ineligible for award of a Government contract by virtue of section 3(a) of the Davis-Bacon Act or 29 CFR 5.12(a)(1).

c. The penalty for making false statements is prescribed in the U.S. Criminal Code, 18 U.S.C. 1001.

V. CONTRACT WORK HOURS AND SAFETY STANDARDS ACT

The following clauses apply to any Federal-aid construction contract in an amount in excess of $100,000 and subject to the overtime provisions of the Contract Work Hours and Safety Standards Act. These clauses shall be inserted in addition to the clauses required by 29 CFR 5.5(a) or 29 CFR 4.6. As used in this paragraph, the terms laborers and mechanics include watchmen and guards.

1. Overtime requirements. No contractor or subcontractor contracting for any part of the contract work which may require or involve the employment of laborers or mechanics shall require or permit any such laborer or mechanic in any workweek in which he or she is employed on such work to work in excess of forty hours in such workweek unless such laborer or mechanic receives compensation at a rate not less than one and one-half times the basic rate of pay for all hours worked in excess of forty hours in such workweek.

2. Violation; liability for unpaid wages; liquidated damages. In the event of any violation of the clause set forth in paragraph (1.) of this section, the contractor and any subcontractor responsible therefor shall be liable for the unpaid wages. In addition, such contractor and subcontractor shall be liable to the United States (in the case of work done under contract for the District of Columbia or a territory, to such District or to such territory), for liquidated damages.

Such liquidated damages shall be computed with respect to each individual laborer or mechanic, including watchmen and guards, employed in violation of the clause set forth in paragraph (1.) of this section, in the sum of $10 for each calendar day on which such individual was required or permitted to work in excess of the standard workweek of forty hours without payment of the overtime wages required by the clause set forth in paragraph (1.) of this section.

3. Withholding for unpaid wages and liquidated damages. The FHWA or the contacting agency shall upon its own action or upon written request of an authorized representative of the Department of Labor withhold or cause to be withheld, from any moneys payable on account of work performed by the contractor or subcontractor under any such contract or any other Federal contract with the same prime contractor, or any other federally-assisted contract subject to the Contract Work Hours and Safety Standards Act, which is held by the same prime contractor, such sums as may be determined to be necessary to satisfy any liabilities of such contractor or subcontractor for unpaid wages and liquidated damages as provided in the clause set forth in paragraph (2.) of this section.

4. Subcontracts. The contractor or subcontractor shall insert in any subcontracts the clauses set forth in paragraph (1.) through (4.) of this section and also a clause requiring the subcontractors to include these clauses in any lower tier subcontracts. The prime contractor shall be responsible for compliance by any subcontractor or lower tier subcontractor with the clauses set forth in paragraphs (1.) through (4.) of this section.

VI. SUBLETTING OR ASSIGNING THE CONTRACT

This provision is applicable to all Federal-aid construction contracts on the National Highway System.

1. The contractor shall perform with its own organization contract work amounting to not less than 30 percent (or a greater percentage if specified elsewhere in the contract) of the total original contract price, excluding any specialty items designated by the contracting agency. Specialty items may be performed by subcontract and the amount of any such specialty items performed may be deducted from the total original contract price before computing the amount of work required to be performed by the contractor's own organization (23 CFR 635.116).

a. The term “perform work with its own organization” refers to workers employed or leased by the prime contractor, and equipment owned or rented by the prime contractor, with or without operators. Such term does not include employees or equipment of a subcontractor or lower tier subcontractor, agents of the prime contractor, or any other assignees. The term may include payments for the costs of hiring leased employees from an employee leasing firm meeting all relevant Federal and State regulatory requirements. Leased employees may only be included in this term if the prime contractor meets all of the following conditions:

(1) the prime contractor maintains control over the supervision of the day-to-day activities of the leased employees;

(2) the prime contractor remains responsible for the quality of the work of the leased employees;

(3) the prime contractor retains all power to accept or exclude individual employees from work on the project; and

(4) the prime contractor remains ultimately responsible for the payment of predetermined minimum wages, the submission of payrolls, statements of compliance and all other Federal regulatory requirements.

b. "Specialty Items" shall be construed to be limited to work that requires highly specialized knowledge, abilities, or equipment not ordinarily available in the type of contracting organizations qualified and expected to bid or propose on the contract as a whole and in general are to be limited to minor components of the overall contract.

2. The contract amount upon which the requirements set forth in paragraph (1) of Section VI is computed includes the cost of material and manufactured products which are to be purchased or produced by the contractor under the contract provisions.

3. The contractor shall furnish (a) a competent superintendent or supervisor who is employed by the firm, has full authority to direct performance of the work in accordance with the contract requirements, and is in charge of all construction operations (regardless of who performs the work) and (b) such other of its own organizational resources (supervision, management, and engineering services) as the contracting officer determines is necessary to assure the performance of the contract.

4. No portion of the contract shall be sublet, assigned or otherwise disposed of except with the written consent of the contracting officer, or authorized representative, and such consent when given shall not be construed to relieve the contractor of any responsibility for the fulfillment of the contract. Written consent will be given only after the contracting agency has assured that each subcontract is evidenced in writing and that it contains all pertinent provisions and requirements of the prime contract.

5. The 30% self-performance requirement of paragraph (1) is not applicable to design-build contracts; however, contracting agencies may establish their own self-performance requirements.

VII. SAFETY: ACCIDENT PREVENTION

This provision is applicable to all Federal-aid construction contracts and to all related subcontracts.

1. In the performance of this contract the contractor shall comply with all applicable Federal, State, and local laws governing safety, health, and sanitation (23 CFR 635). The contractor shall provide all safeguards, safety devices and protective equipment and take any other needed actions as it determines, or as the contracting officer may determine, to be reasonably necessary to protect the life and health of employees on the job and the safety of the public and to protect property in connection with the performance of the work covered by the contract.

2. It is a condition of this contract, and shall be made a condition of each subcontract, which the contractor enters into pursuant to this contract, that the contractor and any subcontractor shall not

permit any employee, in performance of the contract, to work in surroundings or under conditions which are unsanitary, hazardous or dangerous to his/her health or safety, as determined under construction safety and health standards (29 CFR 1926) promulgated by the Secretary of Labor, in accordance with Section 107 of the Contract Work Hours and Safety Standards Act (40 U.S.C. 3704).

3. Pursuant to 29 CFR 1926.3, it is a condition of this contract that the Secretary of Labor or authorized representative thereof, shall have right of entry to any site of contract performance to inspect or investigate the matter of compliance with the construction safety and health standards and to carry out the duties of the Secretary under Section 107 of the Contract Work Hours and Safety Standards Act (40 U.S.C.3704).

VIII. FALSE STATEMENTS CONCERNING HIGHWAY PROJECTS

This provision is applicable to all Federal-aid construction contracts and to all related subcontracts.

In order to assure high quality and durable construction in conformity with approved plans and specifications and a high degree of reliability on statements and representations made by engineers, contractors, suppliers, and workers on Federal-aid highway projects, it is essential that all persons concerned with the project perform their functions as carefully, thoroughly, and honestly as possible. Willful falsification, distortion, or misrepresentation with respect to any facts related to the project is a violation of Federal law. To prevent any misunderstanding regarding the seriousness of these and similar acts, Form FHWA-1022 shall be posted on each Federal-aid highway project (23 CFR 635) in one or more places where it is readily available to all persons concerned with the project:

18 U.S.C. 1020 reads as follows:

"Whoever, being an officer, agent, or employee of the United States, or of any State or Territory, or whoever, whether a person, association, firm, or corporation, knowingly makes any false statement, false representation, or false report as to the character, quality, quantity, or cost of the material used or to be used, or the quantity or quality of the work performed or to be performed, or the cost thereof in connection with the submission of plans, maps, specifications, contracts, or costs of construction on any highway or related project submitted for approval to the Secretary of Transportation; or

Whoever knowingly makes any false statement, false representation, false report or false claim with respect to the character, quality, quantity, or cost of any work performed or to be performed, or materials furnished or to be furnished, in connection with the construction of any highway or related project approved by the Secretary of Transportation; or

Whoever knowingly makes any false statement or false representation as to material fact in any statement, certificate, or report submitted pursuant to provisions of the Federal-aid Roads Act approved July 1, 1916, (39 Stat. 355), as amended and supplemented;

Shall be fined under this title or imprisoned not more than 5 years or both."

IX. IMPLEMENTATION OF CLEAN AIR ACT AND FEDERAL WATER POLLUTION CONTROL ACT

This provision is applicable to all Federal-aid construction contracts and to all related subcontracts.

By submission of this bid/proposal or the execution of this contract, or subcontract, as appropriate, the bidder, proposer, Federal-aid construction contractor, or subcontractor, as appropriate, will be deemed to have stipulated as follows:

1. That any person who is or will be utilized in the performance of this contract is not prohibited from receiving an award due to a violation of Section 508 of the Clean Water Act or Section 306 of the Clean Air Act.
2. That the contractor agrees to include or cause to be included the requirements of paragraph (1) of this Section X in every subcontract, and further agrees to take such action as the contracting agency may direct as a means of enforcing such requirements.

X. CERTIFICATION REGARDING DEBARMENT, SUSPENSION, INELIGIBILITY AND VOLUNTARY EXCLUSION

This provision is applicable to all Federal-aid construction contracts, design-build contracts, subcontracts, lower-tier subcontracts, purchase orders, lease agreements, consultant contracts or any other covered transaction requiring FHWA approval or that is estimated to cost $25,000 or more – as defined in 2 CFR Parts 180 and 1200.

1**. Instructions for Certification – First Tier Participants:**

a. By signing and submitting this proposal, the prospective first tier participant is providing the certification set out below.

b. The inability of a person to provide the certification set out below will not necessarily result in denial of participation in this covered transaction. The prospective first tier participant shall submit an explanation of why it cannot provide the certification set out below. The certification or explanation will be considered in connection with the department or agency's determination whether to enter into this transaction. However, failure of the prospective first tier participant to furnish a certification or an explanation shall disqualify such a person from participation in this transaction.

c. The certification in this clause is a material representation of fact upon which reliance was placed when the contracting agency determined to enter into this transaction. If it is later determined that the prospective participant knowingly rendered an erroneous certification, in addition to other remedies available to the Federal Government, the contracting agency may terminate this transaction for cause of default.

d. The prospective first tier participant shall provide immediate written notice to the contracting agency to whom this proposal is submitted if any time the prospective first tier participant learns that its certification was erroneous when submitted or has become erroneous by reason of changed circumstances.

e. The terms "covered transaction," "debarred," "suspended," "ineligible," "participant," "person," "principal," and "voluntarily excluded," as used in this clause, are defined in 2 CFR Parts 180 and 1200. “First Tier Covered Transactions” refers to any covered transaction between a grantee or subgrantee of Federal funds and a participant (such as the prime or general contract). “Lower Tier Covered Transactions” refers to any covered transaction under a First Tier Covered Transaction (such as subcontracts). “First Tier Participant” refers to the participant who has entered into a covered transaction with a grantee or subgrantee of Federal funds (such as the prime or general contractor). “Lower Tier Participant” refers any participant who has entered into a covered transaction with a First Tier Participant or other Lower Tier Participants (such as subcontractors and suppliers).

f. The prospective first tier participant agrees by submitting this proposal that, should the proposed covered transaction be entered into, it shall not knowingly enter into any lower tier covered transaction with a person who is debarred, suspended, declared ineligible, or voluntarily excluded from participation in this covered transaction, unless authorized by the department or agency entering into this transaction.

g. The prospective first tier participant further agrees by submitting this proposal that it will include the clause titled "Certification Regarding Debarment, Suspension, Ineligibility and Voluntary Exclusion-Lower Tier Covered Transactions," provided by the department or contracting agency, entering into this covered transaction, without modification, in all lower tier covered transactions and in all solicitations for lower tier covered transactions exceeding the $25,000 threshold.

h. A participant in a covered transaction may rely upon a certification of a prospective participant in a lower tier covered transaction that is not debarred, suspended, ineligible, or voluntarily excluded from the covered transaction, unless it knows that the certification is erroneous. A participant is responsible for ensuring that its principals are not suspended, debarred, or otherwise ineligible to participate in covered transactions. To verify the eligibility of its principals, as well as the eligibility of any lower tier prospective participants, each participant may, but is not required to, check the Excluded Parties List System website (https://www.epls.gov/), which is compiled by the General Services Administration.

i. Nothing contained in the foregoing shall be construed to require the establishment of a system of records in order to render in good faith the certification required by this clause. The knowledge and information of the prospective participant is not required to exceed that which is normally possessed by a prudent person in the ordinary course of business dealings.

j. Except for transactions authorized under paragraph (f) of these instructions, if a participant in a covered transaction knowingly enters into a lower tier covered transaction with a person who is suspended, debarred, ineligible, or voluntarily excluded from participation in this transaction, in addition to other remedies available to the Federal Government, the department or agency may terminate this transaction for cause or default.

* * * * *

2. Certification Regarding Debarment, Suspension, Ineligibility and Voluntary Exclusion – First Tier Participants:

a. The prospective first tier participant certifies to the best of its knowledge and belief, that it and its principals:

(1) Are not presently debarred, suspended, proposed for debarment, declared ineligible, or voluntarily excluded from participating in covered transactions by any Federal department or agency;

(2) Have not within a three-year period preceding this proposal been convicted of or had a civil judgment rendered against them for commission of fraud or a criminal offense in connection with obtaining, attempting to obtain, or performing a public (Federal, State or local) transaction or contract under a public transaction; violation of Federal or State antitrust statutes or commission of embezzlement, theft, forgery, bribery, falsification or destruction of records, making false statements, or receiving stolen property;

(3) Are not presently indicted for or otherwise criminally or civilly charged by a governmental entity (Federal, State or local) with commission of any of the offenses enumerated in paragraph (a)(2) of this certification; and

(4) Have not within a three-year period preceding this application/proposal had one or more public transactions (Federal, State or local) terminated for cause or default.

b. Where the prospective participant is unable to certify to any of the statements in this certification, such prospective participant shall attach an explanation to this proposal.

2. **Instructions for Certification - Lower Tier Participants:**

(Applicable to all subcontracts, purchase orders and other lower tier transactions requiring prior FHWA approval or estimated to cost $25,000 or more - 2 CFR Parts 180 and 1200)

a. By signing and submitting this proposal, the prospective lower tier is providing the certification set out below.

b. The certification in this clause is a material representation of fact upon which reliance was placed when this transaction was entered into. If it is later determined that the prospective lower tier participant knowingly rendered an erroneous certification, in addition to other remedies available to the Federal Government, the department, or agency with which this transaction originated may pursue available remedies, including suspension and/or debarment.

c. The prospective lower tier participant shall provide immediate written notice to the person to which this proposal is submitted if at any time the prospective lower tier participant learns that its certification was erroneous by reason of changed circumstances.

d. The terms "covered transaction," "debarred," "suspended," "ineligible," "participant," "person," "principal," and "voluntarily excluded," as used in this clause, are defined in 2 CFR Parts 180 and 1200. You may contact the person to which this proposal is submitted for assistance in obtaining a copy of those regulations. “First Tier Covered Transactions” refers to any covered transaction between a grantee or subgrantee of Federal funds and a participant (such as the prime or general contract). “Lower Tier Covered Transactions” refers to any covered transaction under a First Tier Covered Transaction (such as subcontracts). “First Tier Participant” refers to the participant who has entered into a covered transaction with a grantee or subgrantee of Federal funds (such as the prime or general contractor). “Lower Tier Participant” refers any participant who has entered into a covered transaction with a First Tier Participant or other Lower Tier Participants (such as subcontractors and suppliers).

e. The prospective lower tier participant agrees by submitting this proposal that, should the proposed covered transaction be entered into, it shall not knowingly enter into any lower tier covered transaction with a person who is debarred, suspended, declared ineligible, or voluntarily excluded from participation in this covered transaction, unless authorized by the department or agency with which this transaction originated.

f. The prospective lower tier participant further agrees by submitting this proposal that it will include this clause titled "Certification Regarding Debarment, Suspension, Ineligibility and Voluntary Exclusion-Lower Tier Covered Transaction," without modification, in all lower tier covered transactions and in all solicitations for lower tier covered transactions exceeding the $25,000 threshold.

g. A participant in a covered transaction may rely upon a certification of a prospective participant in a lower tier covered transaction that is not debarred, suspended, ineligible, or voluntarily excluded from the covered transaction, unless it knows that the certification is erroneous. A participant is responsible for ensuring that its principals are not suspended, debarred, or otherwise ineligible to participate in covered transactions. To verify the eligibility of its principals, as well as the eligibility of any lower tier prospective participants, each participant may, but is not required to, check the Excluded Parties List System website (https://www.epls.gov/), which is compiled by the General Services Administration.

h. Nothing contained in the foregoing shall be construed to require establishment of a system of records in order to render in good faith the certification required by this clause. The knowledge and information of participant is not required to exceed that which is normally possessed by a prudent person in the ordinary course of business dealings.

i. Except for transactions authorized under paragraph e of these instructions, if a participant in a covered transaction knowingly enters into a lower tier covered transaction with a person who is suspended, debarred, ineligible, or voluntarily excluded from participation in this transaction, in addition to other remedies available to the Federal Government, the department or agency with which this transaction originated may pursue available remedies, including suspension and/or debarment.

* * * * *

Certification Regarding Debarment, Suspension, Ineligibility and Voluntary Exclusion--Lower Tier Participants:

1. The prospective lower tier participant certifies, by submission of this proposal, that neither it nor its principals is presently debarred, suspended, proposed for debarment, declared ineligible, or voluntarily excluded from participating in covered transactions by any Federal department or agency.

2. Where the prospective lower tier participant is unable to certify to any of the statements in this certification, such prospective participant shall attach an explanation to this proposal.

* * * * *

XI. CERTIFICATION REGARDING USE OF CONTRACT FUNDS FOR LOBBYING

This provision is applicable to all Federal-aid construction contracts and to all related subcontracts which exceed $100,000 (49 CFR 20).

1. The prospective participant certifies, by signing and submitting this bid or proposal, to the best of his or her knowledge and belief, that:

a. No Federal appropriated funds have been paid or will be paid, by or on behalf of the undersigned, to any person for influencing or attempting to influence an officer or employee of any Federal agency, a Member of Congress, an officer or employee of Congress, or an employee of a Member of Congress in connection with the awarding of any Federal contract, the making of any Federal grant, the making of any Federal loan, the entering into of any cooperative agreement, and the extension, continuation, renewal, amendment, or modification of any Federal contract, grant, loan, or cooperative agreement.

b. If any funds other than Federal appropriated funds have been paid or will be paid to any person for influencing or attempting to influence an officer or employee of any Federal agency, a Member of Congress, an officer or employee of Congress, or an employee of a Member of Congress in connection with this Federal contract, grant, loan, or cooperative agreement, the undersigned shall complete and submit Standard Form-LLL, "Disclosure Form to Report Lobbying," in accordance with its instructions.

2. This certification is a material representation of fact upon which reliance was placed when this transaction was made or entered into. Submission of this certification is a prerequisite for making or entering into this transaction imposed by 31 U.S.C. 1352. Any person who fails to file the required certification shall be subject to a civil penalty of not less than $10,000 and not more than $100,000 for each such failure.

3. The prospective participant also agrees by submitting its bid or proposal that the participant shall require that the language of this certification be included in all lower tier subcontracts, which exceed $100,000 and that all such recipients shall certify and disclose accordingly.

ATTACHMENT A - EMPLOYMENT AND MATERIALS PREFERENCE FOR APPALACHIAN DEVELOPMENT HIGHWAY SYSTEM OR APPALACHIAN LOCAL ACCESS ROAD CONTRACTS

This provision is applicable to all Federal-aid projects funded under the Appalachian Regional Development Act of 1965.

1. During the performance of this contract, the contractor undertaking to do work which is, or reasonably may be, done as on-site work, shall give preference to qualified persons who regularly reside in the labor area as designated by the DOL wherein the contract work is situated, or the subregion, or the Appalachian counties of the State wherein the contract work is situated, except:

a. To the extent that qualified persons regularly residing in the area are not available.

b. For the reasonable needs of the contractor to employ supervisory or specially experienced personnel necessary to assure an efficient execution of the contract work.

c. For the obligation of the contractor to offer employment to present or former employees as the result of a lawful collective bargaining contract, provided that the number of nonresident persons employed under this subparagraph (1c) shall not exceed 20 percent of the total number of employees employed by the contractor on the contract work, except as provided in subparagraph (4) below.

2. The contractor shall place a job order with the State Employment Service indicating (a) the classifications of the laborers, mechanics and other employees required to perform the contract work, (b) the number of employees required in each classification, (c) the date on which the participant estimates such employees will be required, and (d) any other pertinent information required by the State Employment Service to complete the job order form. The job order may be placed with the State Employment Service in writing or by telephone. If during the course of the contract work, the information submitted by the contractor in the original job order is substantially modified, the participant shall promptly notify the State Employment Service.

3. The contractor shall give full consideration to all qualified job applicants referred to him by the State Employment Service. The contractor is not required to grant employment to any job applicants who, in his opinion, are not qualified to perform the classification of work required.

4. If, within one week following the placing of a job order by the contractor with the State Employment Service, the State Employment Service is unable to refer any qualified job applicants to the contractor, or less than the number requested, the State Employment Service will forward a certificate to the contractor indicating the unavailability of applicants. Such certificate shall be made a part of the contractor's permanent project records. Upon receipt of this certificate, the contractor may employ persons who do not normally reside in the labor area to fill positions covered by the certificate, notwithstanding the provisions of subparagraph (1c) above.

5. The provisions of 23 CFR 633.207(e) allow the contracting agency to provide a contractual preference for the use of mineral resource materials native to the Appalachian region.

6. The contractor shall include the provisions of Sections 1 through 4 of this Attachment A in every subcontract for work which is, or reasonably may be, done as on-site work.

End of FHWA 1273

DEPARTMENT OF THE ARMY
NEW ENGLAND DISTRICT, CORPS OF ENGINEERS
696 VIRGINIA ROAD
CONCORD, MASSACHUSETTS 01742-2751

REPLY TO
ATTENTION OF

MAINE GENERAL PERMIT (GP)
AUTHORIZATION LETTER AND SCREENING SUMMARY

OFFICE OF ENVIRONMENTAL SERVICES
MAINE DEPT. OF TRANSPORTATION
16 STATE HOUSE STATION
AUGUSTA, MAINE 04333

CORPS PERMIT # NAE-2013-01797
CORPS PGP ID# 13-289
STATE ID# PBR

DESCRIPTION OF WORK:
Place temporary and permanent fill below the ordinary high water line of the Presumpscot River at Westbrook, Maine in order to replace the existing deteriorated Bridge Street bridge. Approximately 2,239 s.f. of stream bed will be permanently impacted by the project and another 500 s.f. will be temporarily impacted. This work is shown on the attached plans entitled "BRIDGE STREET WESTBROOK, CUMBERLAND COUNTY" in two sheets undated and "BRIDGE STREET BRIDGE, PRESUMPSCOT RIVER, WESTBROOK, CUMBERLAND COUNTY" in nine sheets dated "March 2013". DOT WIN: 19282.00

LAT/LONG COORDINATES : 43.6776552° N -70.3676383° W USGS QUAD: PORTLAND WEST, ME

I. CORPS DETERMINATION:

Based on our review of the information you provided, we have determined that your project will have only minimal individual and cumulative impacts on waters and wetlands of the United States. **Your work is therefore authorized by the U.S. Army Corps of Engineers under the enclosed Federal Permit, the Maine General Permit (GP).** Accordingly, we do not plan to take any further action on this project.

You must perform the activity authorized herein in compliance with all the terms and conditions of the GP [including any attached Additional Conditions and any conditions placed on the State 401 Water Quality Certification including any required mitigation]. Please review the enclosed GP carefully, including the GP conditions beginning on page 5, to familiarize yourself with its contents. You are responsible for complying with all of the GP requirements; therefore you should be certain that whoever does the work fully understands all of the conditions. You may wish to discuss the conditions of this authorization with your contractor to ensure the contractor can accomplish the work in a manner that conforms to all requirements.

If you change the plans or construction methods for work within our jurisdiction, please contact us immediately to discuss modification of this authorization. This office must approve any changes before you undertake them.

Condition 41 of the GP (page 18) provides one year for completion of work that has commenced or is under contract to commence prior to the expiration of the GP on October 12, 2015. You will need to apply for reauthorization for any work within Corps jurisdiction that is not completed by October 12, 2016.

This authorization presumes the work shown on your plans noted above is in waters of the U.S. Should you desire to appeal our jurisdiction, please submit a request for an approved jurisdictional determination in writing to the undersigned.

No work may be started unless and until all other required local, State and Federal licenses and permits have been obtained. **This includes but is not limited to a Flood Hazard Development Permit issued by the town if necessary.**

II. STATE ACTIONS: PENDING [X], ISSUED[ ], DENIED [ ] DATE:

APPLICATION TYPE: PBR: X, TIER 1: ___, TIER 2 : ___, TIER 3: ___, LURC: ___ DMR LEASE: ___ NA: ___

III. FEDERAL ACTIONS:

JOINT PROCESSING MEETING: 8/22/13 LEVEL OF REVIEW: CATEGORY 1: ___ CATEGORY 2: X

AUTHORITY (Based on a review of plans and/or State/Federal applications): SEC 10___, 404 X 10/404___, 103___.

EXCLUSIONS: The exclusionary criteria identified in the general permit do not apply to this project.

FEDERAL RESOURCE AGENCY OBJECTIONS: EPA NO, USF&WS NO, NMFS NO

If you have any questions on this matter, please contact my staff at 207-623-8367 at our Manchester, Maine Project Office. In order for us to better serve you, we would appreciate your completing our Customer Service Survey located at http://per2.nwp.usace.army.mil/survey.html

Jay L. Clement
JAY L. CLEMENT
SENIOR PROJECT MANAGER
MAINE PROJECT OFFICE

For Jay L. Clement 9/13/13
FRANK J. DEL GIUDICE DATE
CHIEF, PERMITS & ENFORCEMENT BRANCH
REGULATORY DIVISION

US Army Corps
of Engineers
New England District

PLEASE NOTE THE FOLLOWING GENERAL CONDITIONS FOR
DEPARTMENT OF THE ARMY
GENERAL PERMIT
NO. NAE-2013-01797

1. This authorization requires you to 1) notify us before beginning work so we may inspect the project, and 2) submit a Compliance Certification Form. You must complete and return the enclosed Work Start Notification Form(s) to this office at least two weeks before the anticipated starting date. You must complete and return the enclosed Compliance Certification Form within one month following the completion of the authorized work and any required mitigation (but not mitigation monitoring, which requires separate submittals).

2. The permittee shall assure that a copy of this permit is at the work site whenever work is being performed and that all personnel performing work at the site of the work authorized by this permit are fully aware of the terms and conditions of the permit. This permit, including its drawings and any appendices and other attachments, shall be made a part of any and all contracts and sub-contracts for work which affects areas of Corps of Engineers' jurisdiction at the site of the work authorized by this permit. This shall be done by including the entire permit in the specifications for the work. If the permit is issued after construction specifications but before receipt of bids or quotes, the entire permit shall be included as an addendum to the specifications. The term "entire permit" includes permit amendments. Although the permittee may assign various aspects of the work to different contractors or sub-contractors, all contractors and sub-contractors shall be obligated by contract to comply with all environmental protection provisions of the entire permit, and no contract or sub-contract shall require or allow unauthorized work in areas of Corps of Engineers jurisdiction.

3. Adequate sedimentation and erosion control devices, such as geotextile silt fences or other devices capable of filtering the fines involved, shall be installed and properly maintained to minimize impacts during construction. These devices must be removed upon completion of work and stabilization of disturbed areas. The sediment collected by these devices must also be removed and placed upland, in a manner that will prevent its later erosion and transport to a waterway or wetland.

4. All exposed soils resulting from the construction will be promptly seeded and mulched in order to achieve vegetative stabilization.

5. All areas of temporary fill shall be restored to their original contour and character upon completion of the project.

6. No cofferdam installation/removal or pile driving activities shall occur in the water from April 1 to June 30 in order to minimize potential impacts to fisheries and local water quality.

7. The permittee must still obtain any other Federal, State, or local permits as required by law before beginning work. This includes but is not limited to a Flood Hazard Development Permit issued by the town if necessary.

Section 3: Project Location Map

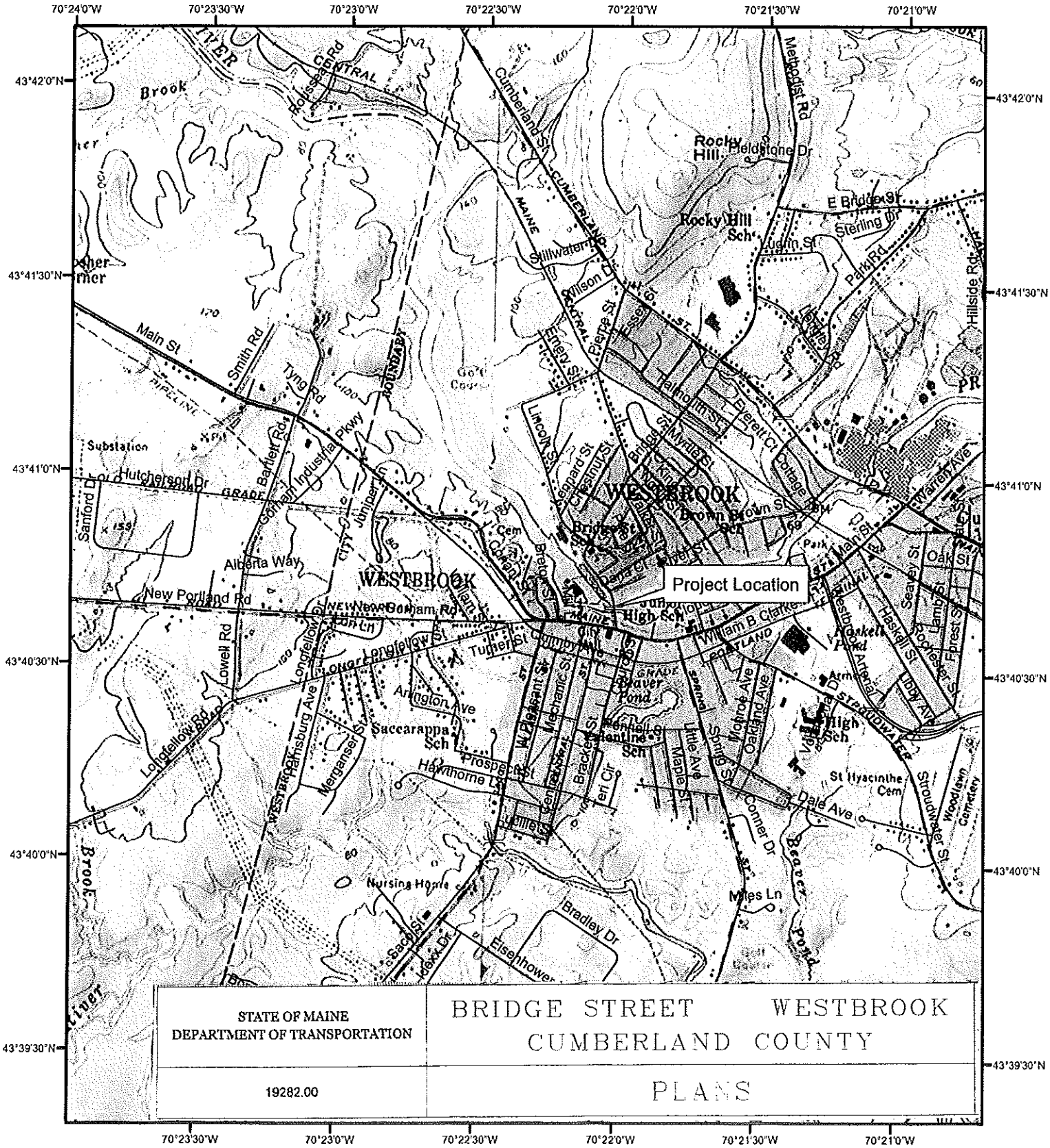

STATE OF MAINE DEPARTMENT OF TRANSPORTATION	BRIDGE STREET WESTBROOK CUMBERLAND COUNTY
19282.00	PLANS

-70.367107
43.677752

0 330 660 1,320 1,980 2,640 Feet

MDOT WIN 19282.00
Westbrook
Bridge Street Bridge #5661

N
W E
S

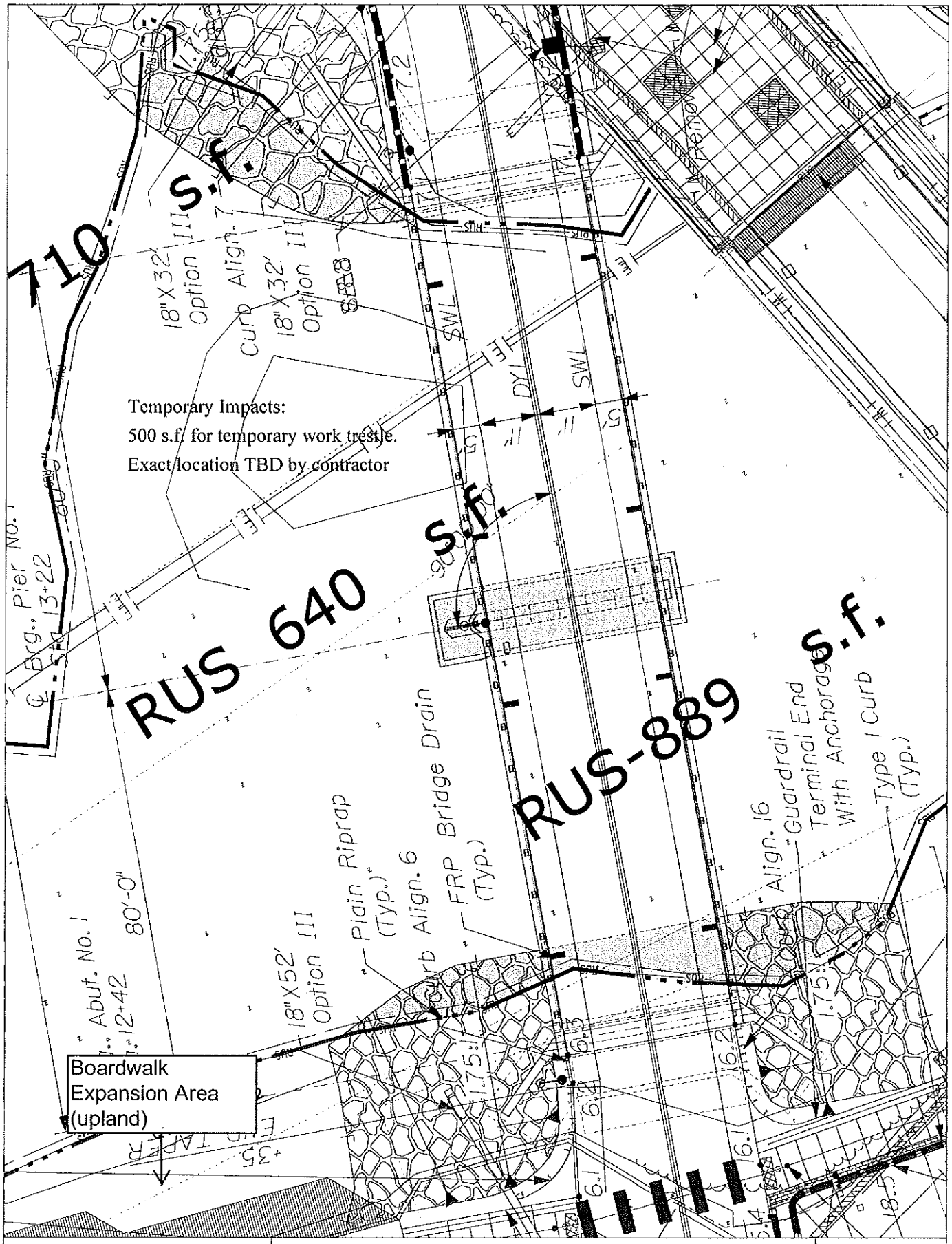

STATE OF MAINE DEPARTMENT OF TRANSPORTATION	BRIDGE STREET WESTBROOK CUMBERLAND COUNTY	SHEET NUMBER 100
19282.00	PLANS	OF__

STATE OF MAINE
DEPARTMENT OF TRANSPORTATION

SPECIFICATIONS

Design: AASHTO LRFD Bridge Design Specifications, Sixth Edition 2012.

DESIGN LOADING

Live Load ..... HL - 93 Modified for Strength I

TRAFFIC DATA

Current (2012) AADT	12570
Future (2032) AADT	15080
DHV - % of AADT	11%
Design Hour Volume	1659
Heavy Trucks (% of AADT)	4%
Heavy Trucks (% of DHV)	3%
Directional Distribution (% of DHV)	55%
18 kip Equivalent P 2.0	229
18 kip Equivalent P 2.5	218
Design Speed (mph)	25 mph

HYDROLOGIC DATA

Drainage Area	577 sq mi
Design Discharge (Q50)	15,700 cfs
Check Discharge (Q100)	18,900 cfs
Headwater Elevation (Q50)	53.2 ft
Headwater Elevation (Q100)	54.9 ft
Discharge Velocity (Q50)	7.2 fps
Discharge Velocity (Q100)	7.7 fps
Headwater Elevation (Q1.1)	43.2 ft
Discharge Velocity (Q1.1)	3.3 fps
Headwater Elevation (Q25)	51.6 ft

MATERIALS

Concrete:
- Curbs & Barriers ..... Class "LP"
- Seals ..... Class "S"
- All Other ..... Class "A"

Reinforcing Steel:
- Deck, Curbs, & Barriers ..... (Corrosion Resistant Reinforcing System)
- All Other ..... ASTM A 615/A 615M, Grade 60

Structural Steel:
- All Material (except as noted) ... ASTM A 709, Grade 50W (unpainted)
- High Strength Bolts ..... ASTM A 325, Type 3
- FRP Hybrid Composite Beams ..... See Special Provision for Section 509

BASIC DESIGN STRESSES

Concrete:
- Class "LP" ..... f'c = 5,075 psi
- Class "S" ..... f'c = 2,900 psi
- Class "A" ..... f'c = 4,350 psi

Reinforcing Steel:
- ASTM A615/A615M, Grade 60 ..... fy = 60,000 psi
- Corrosion Resistant Reinforcing ..... See Special Provision for Section 503

Structural Steel:
- ASTM A 709, Grade 36 ..... F y = 36,000 psi
- ASTM A 325 ..... F u = 120,000 psi

UTILITIES

Portland Water District
Central Maine Power Company
FairPoint Communications
Unitil
Time Warner Cable
City of Westbrook
S.D. Warren/Sappi

MAINTENANCE OF TRAFFIC

Maintain Two-Way Traffic and Pedestrian Traffic on Existing Bridge.

WESTBROOK
CUMBERLAND COUNTY
BRIDGE STREET BRIDGE
OVER
PRESUMPSCOT RIVER
BRIDGE STREET
FEDERAL AID PROJECT NO. BR-1928(200)X
PROJECT LENGTH 0.099 mi.
BRIDGE REPLACEMENT
BRIDGE NO. 5661

LIST OF DRAWINGS

Title Sheet 1
General Plan 1 2
General Plan 1 - City 2B
General Plan 2 3
General Plan 3 4
General Plan 3 - City 4B
Bridge St Profile 5
Boring Plan & Subsurface Profile 6
Boring Logs 7
Typical Sections 8
Traffic Signal Plan 9
Utility Plan 10
Lighting Plan 11
Cross Section 1 12
Cross Section 2 13
Cross Section 3 14
Cross Section 4 15
Cross Section 5 16
Cross Section 6 17
Cross Section 7 18
Cross Section 8 19
Abutment 1 Seal & Footing 20
Abutment 1 Plan 21
Abutment 2 Seal & Footing 22
Abutment 2 Plan 23
Abutment & Wingwall Sections 24
Pier Plan 25
Pier Details 26
Framing Plan 27
Hybrid Composite Beam Details 1 28
Hybrid Composite Beam Details 2 29
Hybrid Composite Beam Details 3 30
Camber & Deflection 31
Superstructure Details 32
Traffic Control Plan 33
Multi-use Bridge 34

40% Plan Impacts Complete
Submittal 03/22/2013

PRELIMINARY
NOT FOR CONSTRUCTION

PROJECT LOCATION:	Within the City of Westbrook 300' North of Main Street carrying Bridge Street over the Presumpscot River. Lat./Long. 43°40'39.82" N, 70°22'01.37" W
PROGRAM AREA:	Bridge
OUTLINE OF WORK:	Bridge replacement with 365' of approach work; approximately 750' of roadway marking & striping, and minor curb and sidewalk reconstruction on Main Street; traffic signal installation at the new Bridge-Main Street intersection; and electrical transmission line relocation.

Stantec

STATE OF MAINE
DEPARTMENT OF TRANSPORTATION
APPROVED
DATE
COMMISSIONER:
CHIEF ENGINEER:

40% PLAN IMPACTS
COMPLETE SUBMITTAL
03/22/2013

PROJECT INFORMATION
PROGRAM: BRIDGE PROGRAM
PROJECT MANAGER: B. CRADO
DESIGNER: T. MERRITT
CONSULTANT: STANTEC
PROJECT ENGINEER: P.E. NUMBER
CONTRACTOR: SIGNATURE
PROJECT COMPLETION DATE: DATE

WIN 19282.00

BR-1928(200)X

WESTBROOK
BRIDGE STREET BRIDGE

TITLE SHEET

SHEET NUMBER

Filename: ...\00\BRIDGE\MSTA\001_Title.dgn Division: BRIDGE Username: cameron Date: 3/22/2013

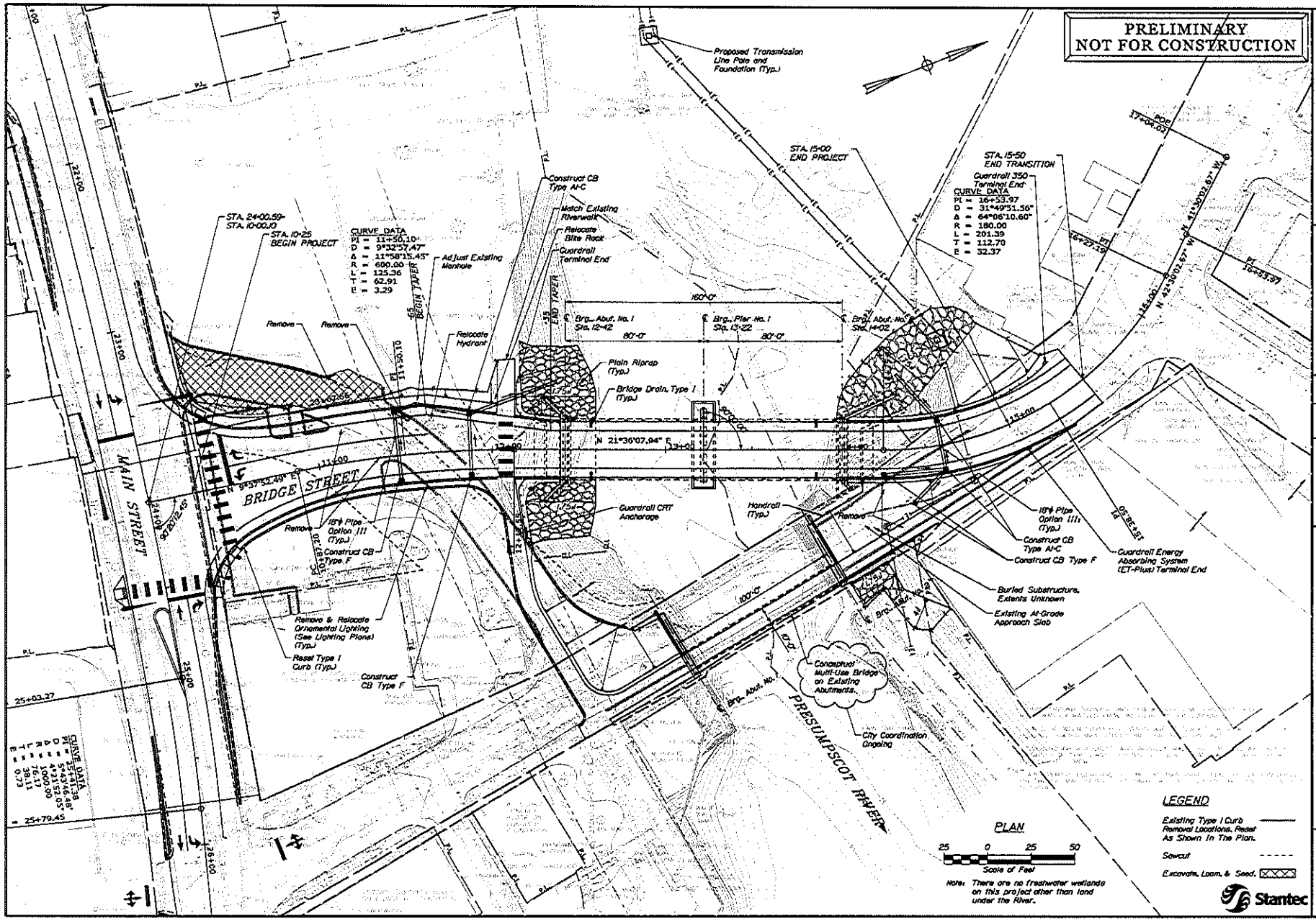

STATE OF MAINE
DEPARTMENT OF TRANSPORTATION

BR-1928(200)X

WIN 19282.00

BRIDGE NO. 5661

BRIDGE PLANS

40% PLAN IMPACTS COMPLETE SUBMITTAL 03/22/2013

PROJ. MANAGER	BOB CONDON	BY	DATE
DESIGN-CHIEF	D. TAYLOR	J. SUTTER	MAR 2013
DESIGN-REVIEW	E. MERRITT	E. MORRITT	MAR 2013
DESIGN-DETAILS	L. LUCKER	P. BRAYA	MAR 2013
REVISION 1			
REVISION 2			
REVISION 3			
REVISION 4			
FIELD CHANGES			

SIGNATURES

P.E. NUMBER

DATES

BRIDGE STREET BRIDGE
PRESUMPSCOT RIVER
WESTBROOK CUMBERLAND COUNTY

GENERAL PLAN 1

SHEET NUMBER

Filename: ...\100\BRIDGE\MS1A\002_Pen_1.dgn Division: BRIDGE Username: cammon Date: 3/22/2013

GENERAL PLAN 1 - CITY
BRIDGE STREET BRIDGE
PRESUMPSCOT RIVER
WESTBROOK CUMBERLAND COUNTY
SHEET NUMBER
STATE OF MAINE
DEPARTMENT OF TRANSPORTATION
BR-1928(200)X
WSN
19282.00
BRIDGE NO 5061
BRIDGE PLANS
PRELIMINARY
NOT FOR CONSTRUCTION
LEGEND
Existing Type I Curb Removal Locations, Reuse As Shown In The Plan.
Sawcut
Excavate, Loam, & Seed.
Potential Outlook Area (City Project)
Sidewalk/ Trail Work
Flow
PLAN
Scale of Feet
CURVE DATA
PI = 14+33.07
D = 31°49'31.56"
Δ = 64°06'10.60"
R = 180.00
L = 201.39
T = 112.70
E = 32.37
CURVE DATA
PI = 11+50.10
D = 9°32'57.47"
Δ = 11°58'15.45"
R = 660.00
L = 125.36
T = 62.91
E = 3.29
CURVE DATA
PI = 25+41.38
D = 5°43'46.48"
Δ = 4°21'52.05"
R = 1000.00
L = 76.17
T = 38.11
E = 0.73
N 21°36'07.34" E
N 42°30'02.57" W
N 41°30'02.57" W
Startec

PRELIMINARY
NOT FOR CONSTRUCTION

LEGEND

Existing Type I Curb Removal Locations, Reset As Shown In The Plan.

Excavate, Loam, & Seed.

Detectable Warning

Sawcut

DANA STREET

MECHANIC STREET

BRIDGE STREET

MAIN STREET

POB = 20+08.00

S 85°46'05.40" E

PC = 20+20.15

PCC = 25+03.27

LIMIT OF WORK 20+25

Relocate Hydrant

Construct Crosswalk w/ Ramps & Detectable Panels (Typ.)

Remove Crosswalk

Relocate Bus Stop (By Others)

Existing Bus Stop

Reset Rim

STA. 10+25 BEGIN PROJECT

Remove Existing Type I Curb Within Roadway Limits to be Reset

Reset Type I Curb (Typ.)

Relocate Street Light

Relocate Light

Retain Light

Remove Concrete Ramp & Level Sidewalk

Remove Trees

Remove Brick Ramp & Level Sidewalk

Remove Tree

Remove Street Light

Sta. 24+00.59= Sta. 10+00.10

Remove Crosswalk

Remove Bus Shelter & Relocate Stop (By Others)

7"x11' Concrete Pad (Bus Shelter & Anchorage By Others)

CURVE DATA
PI = 22+62.04
D = 1°30'28.02"
Δ = 7°17'04.26"
R = 3800.00
L = 483.13
T = 241.89
E = 7.69

CURVE DATA
PI = 11+50.10
D = 9°32'57.47"
Δ = 11°58'15.45"
R = 600.00
L = 125.35
T = 62.91
E = 3.29

R 627.0'
R 200.0'
R 195.0'
R 50.0'
R 45.0'
R 50.0'
R 50.0'

PLAN

25 0 25 50
Scale of Feet

Stantec

STATE OF MAINE
DEPARTMENT OF TRANSPORTATION

BR-1928(200)X

WIN 19282.00

BRIDGE NO. 5651

BRIDGE PLANS

40% PLAN IMPACTS COMPLETE SUBMITTAL 03/22/2013

PROJ. MANAGER	BOB CORCOR		
DESIGN DETAILED	R. TAYLOR	S. SUTER	MAR 2013
CHECKED BY	T. MORRITT	T. MORRITT	MAR 2013
DESIGN APPROVED	T. LUTKER	P. MONTE	MAR 2013
REVISION 1			
REVISION 2			
REVISION 3			
REVISION 4			
FIELD CHECKED			

SIGNATURE

F.A. NUMBER

DATE

BRIDGE STREET BRIDGE
PRESUMPSCOT RIVER
WESTBROOK CUMBERLAND COUNTY

GENERAL PLAN 2

SHEET NUMBER

Filename: ...\00\BRIDGE\MSTA\003_Plan_2.dgn Division: BRIDGE Username: cornron Date: 3/22/2013

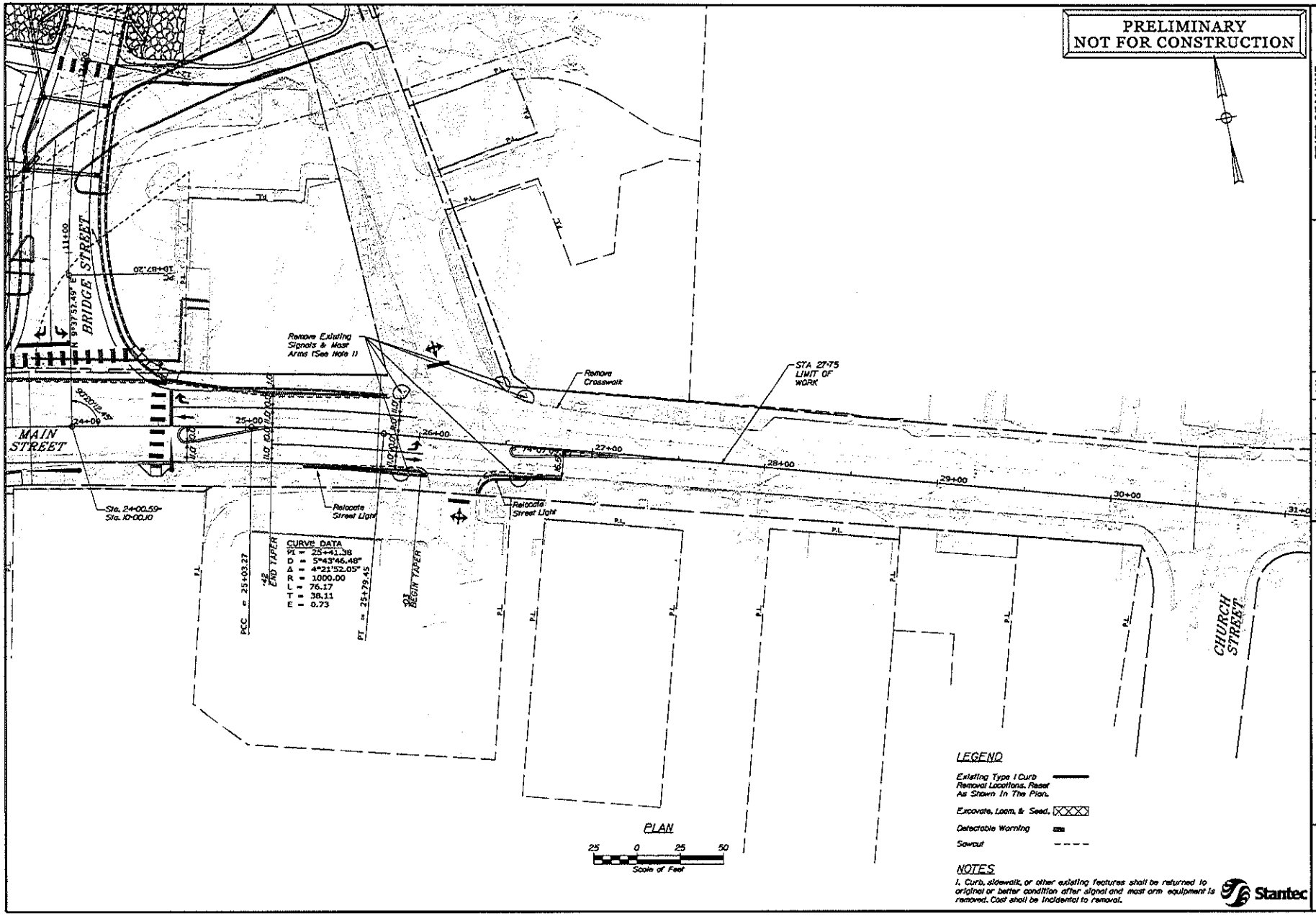

Filename: ...\00UBRIDGE\MSTA\004_Plan_3.dgn Division: BRIDGE Username: common Date: 3/22/2013

GENERAL PLAN 3 - CITY
BRIDGE STREET BRIDGE
PRESUMPSCOT RIVER
WESTBROOK CUMBERLAND COUNTY
SHEET NUMBER
STATE OF MAINE
DEPARTMENT OF TRANSPORTATION
BR-1928(200)X
WIN 19282.00
BRIDGE NO 5661
BRIDGE PLANS
PRELIMINARY
NOT FOR CONSTRUCTION
Stantec
CHURCH STREET
Painted Island (Red) (Typ.)
Sta. 30+25 Limit of Work
30+00
29+00
28+00
27+00
26+00
25+00
24+00
S Spaces Provided on Street Parking (By City)
1'-0" Sawcut Typ.
Remove Trees (Typ.)(4)
25 VARIES END PIPE
20 VARIES BEGIN PIPE
50 VARIES END PIPE
S 74°07'09.05" E
N 5°37'52.49" E
PT = 25+29.45
PCC = 25+03.27
CURVE DATA
PI = 25+11.38
Δ = 5°43'46.48"
D = 4°21'52.05"
R = 1000.00
L = 76.17
T = 38.11
E = 0.73
PLAN
Scale of Feet
25 0 25 50

PRELIMINARY
NOT FOR CONSTRUCTION

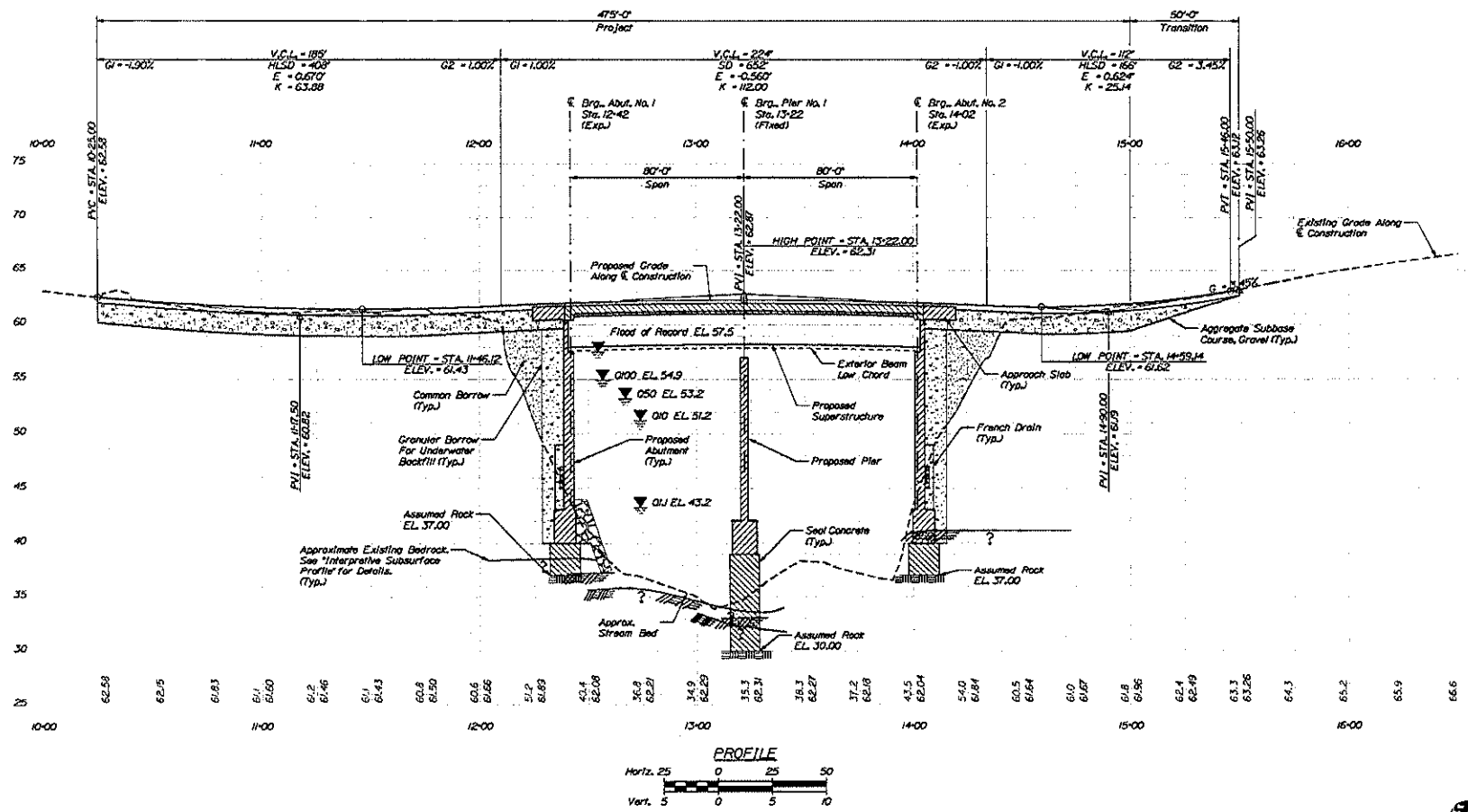

Stantec

STATE OF MAINE
DEPARTMENT OF TRANSPORTATION

BR-1928(200)X

WIN 19282.00

BRIDGE NO. 5691

BRIDGE PLANS

40% PLAN IMPACTS
COMPLETE SUBMITTAL
03/22/2013

PROJ. MANAGER	BOB GOACOS	BY	DATE
DESIGN-SITE MGR	D. LAVOIE	J. SCUTE	MAR 2013
DESIGN-REVIEW	L. ARBOTT	L. ARBOTT	MAR 2013
DESIGN-DETAILER	E. LUTHER	P. MONTA	MAR 2013
DESIGN-STAFF			
REVISION 1			
REVISION 2			
REVISION 3			
REVISION 4			
FIELD ENGINEER			

SIGNATURE

P.E. NUMBER

DATE

BRIDGE STREET BRIDGE
PRESUMPSCOT RIVER
WESTBROOK CUMBERLAND COUNTY

BRIDGE STREET PROFILE

SHEET NUMBER
—

Filename: ...\00\BRIDGE\WSTA\005_Profile.dgn Division: BRIDGE Username: common Date: 3/22/2013

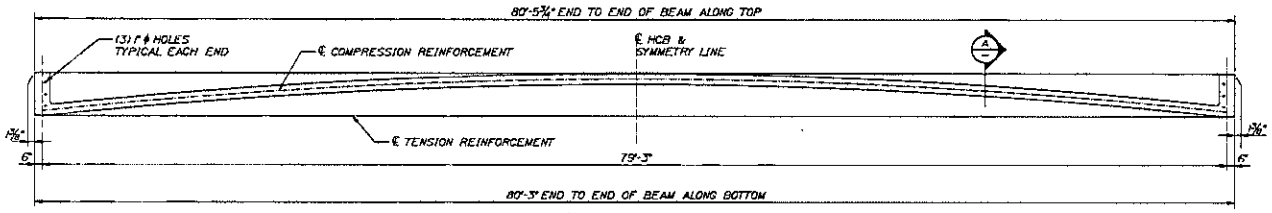

DIMENSIONAL BEAM ELEVATION

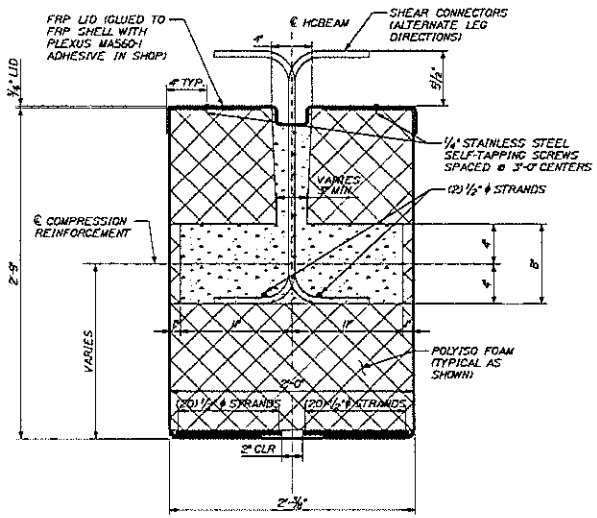

SECTION A-A

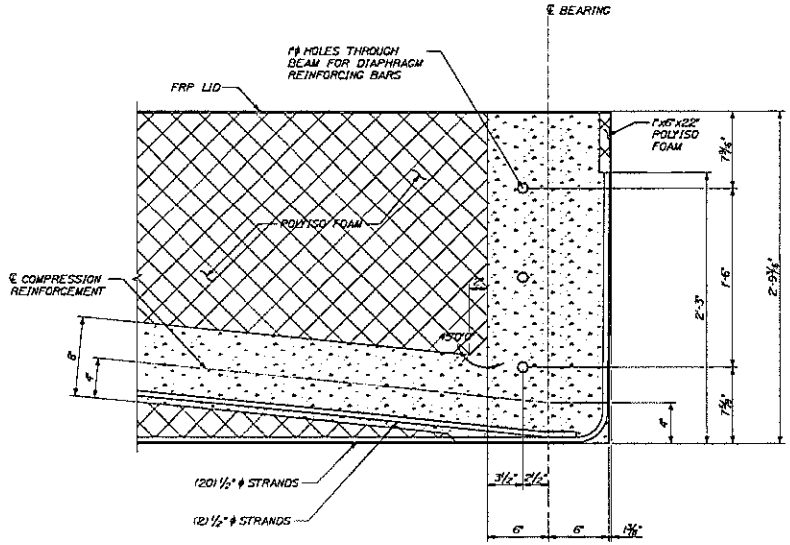

CHIMNEY DETAIL

(note 1⅝" dimension is without any deflection, as measured in mold)

PRELIMINARY
NOT FOR CONSTRUCTION

Stantec

STATE OF MAINE
DEPARTMENT OF TRANSPORTATION

BR-1928(200)X

WIN 19282.00

BRIDGE NO: 5821

BRIDGE PLANS

40% PLAN IMPACTS COMPLETE SUBMITTAL 03/22/2013

PRELIMINARY STAGE RECD.	BY	DATE	
DESIGN-DETAILED	ERC	3/22/13	
CADD-REVIEWED			
CADD-DETAILED			
DESIGN-DETAILED			
REVISION 1			
REVISION 2			
REVISION 3			
REVISION 4			
T.E.B. CHECKED			

SIGNATURE

P.E. NUMBER

DATE
(SEAL)

BRIDGE STREET BRIDGE
PRESUMPSCOT RIVER
WESTBROOK CUMBERLAND COUNTY

HCB DIMENSIONAL DETAILS

SHEET NUMBER

Date:3/22/2013 Username: Eric Division: HIGHWAY File:S:\028_HCBeam_Details2.dgn

PRELIMINARY
NOT FOR CONSTRUCTION

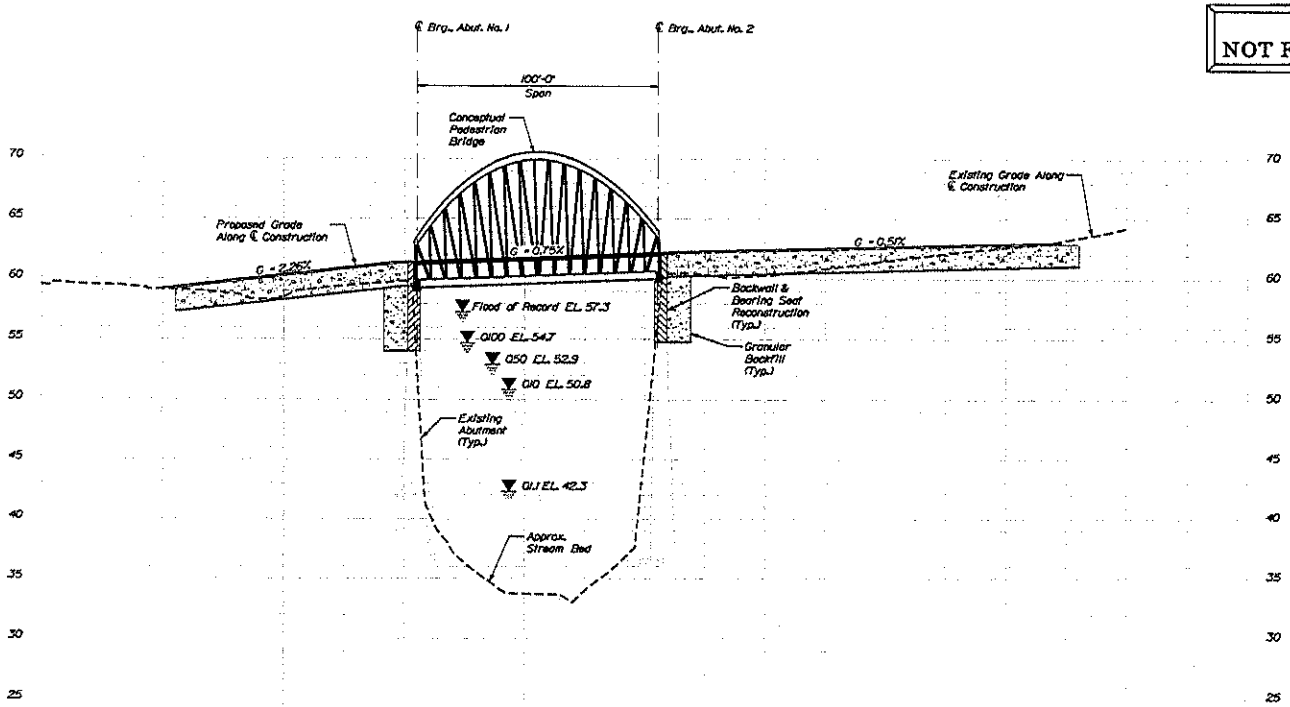

PROFILE

Horiz. 25 0 25 50
Vert. 5 0 5 10

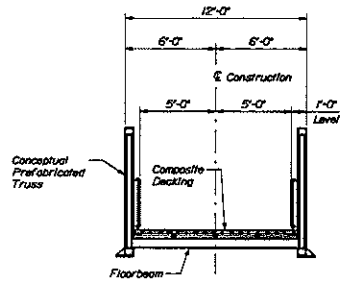

PROPOSED MULTI-USE BRIDGE SECTION

DESIGN REQUIREMENTS

1. The Prefabricated Bridge shall be designed in accordance with the AASHTO Standard Specifications for Highway Bridges, 17th edition, and the AASHTO Guide Specification for Pedestrian Bridges.
2. The Prefabricated Bridge shall be designed to carry a pedestrian loading of 85 psf. No reduction in the pedestrian live load intensity shall be taken.
3. The Construction, handling, and assembly of the prefabricated Bridge shall be in accordance with Special Provision Sections 104 and 504, and with the manufacturer's specification, as applicable.

DESIGN LOADING

Live Load ..... 85 p.s.f. (pedestrian only)

HYDROLOGIC DATA

Drainage Area	577 sq mi
Design Discharge (Q50)	15,700 cfs
Check Discharge (Q100)	18,900 cfs
Headwater Elevation (Q50)	52.9 ft
Headwater Elevation (Q100)	54.7 ft
Discharge Velocity (Q50)	13.6 fps
Discharge Velocity (Q100)	15.3 fps

MATERIALS

Aluminum:	ASTM B209, Alloy #6061-T6
Concrete: (Unless noted otherwise)	Class "A"
Reinforcing Steel:	ASTM A615/A615M, Grade 60
Structural Steel:	ASTM A709/A709M, Grade 50W

BASIC DESIGN STRESSES

Concrete:	f'c = 4,350 psi
Reinforcing Steel:	60,000 psi
Structural Steel:	50,000 psi

Stantec

STATE OF MAINE
DEPARTMENT OF TRANSPORTATION
BR-1928(200)X
BRIDGE NO. 5661 WIN 19282.00 BRIDGE PLANS

40% PLAN IMPACTS
COMPLETE SUBMITTAL
02/22/2013

PROJ. MANAGER	BEN CONDON	BY	DATE
DESIGN DETAILER	D. TAYLOR	J. SUTER	MAR 2013
DESIGN REVIEWER	T. WRIGHT	T. WRIGHT	MAR 2013
BRIDGE ENGINEER	T. WRIGHT	T. WRIGHT	MAR 2013
REVISION 1			
REVISION 2			
REVISION 3			
REVISION 4			
FIELD ENGINEER			

SIGNATURES
P.E. NUMBER
DATE

BRIDGE STREET BRIDGE
PRESUMPSCOT RIVER
WESTBROOK CUMBERLAND COUNTY

MULTI-USE BRIDGE

SHEET NUMBER

Filename: ...\MSTA\034_Ped_Profile.dgn Division: BRIDGE Username: common Date: 3/22/2013

US Army Corps of Engineers®
New England District

GENERAL PERMIT
WORK-START NOTIFICATION FORM
(Minimum Notice: Two weeks before work begins)

****
* MAIL TO: U.S. Army Corps of Engineers, New England District *
* Permits and Enforcement Branch *
* Regulatory Division *
* 696 Virginia Road *
* Concord, Massachusetts 01742-2751 *
****

Corps of Engineers Permit No. NAE-2013-01797 was issued to the Maine Dept. of Transportation on September 13, 2013. This work is located in the Presumpscot River at Westbrook, Maine. The permit authorized the permittee to place temporary and permanent fill below the ordinary high water line in order to replace the existing deteriorated Bridge Street bridge. Approximately 2,239 s.f. of stream bed will be permanently impacted by the project and another 500 s.f. will be temporarily impacted. MaineDOT WIN 19282.00

The people (e.g., contractor) listed below will do the work, and they understand the permit's conditions and limitations.

PLEASE PRINT OR TYPE

Name of Person/Firm: _____

Business Address: _____

_____

_____

_____

Telephone Numbers: ( ) _____ ( ) _____

Proposed Work Dates: **Start:** _____ **Finish:** _____

Permittee/Agent Signature: _____ **Date:** _____

Printed Name: _____ **Title:** _____

Date Permit Issued: _____ **Date Permit Expires:** _____

****

FOR USE BY THE CORPS OF ENGINEERS

PM: Clement **Submittals Required:** No

Inspection Recommendation: Inspect as convenient

_____

_____

US Army Corps
of Engineers ®
New England District

(Minimum Notice: Permittee must sign and return notification within one month of the completion of work.)

COMPLIANCE CERTIFICATION FORM

Permit Number: NAE-2013-01797 MaineDOT WIN 19282.00

Project Manager Clement

Name of Permittee: Maine Dept. of Transportation

Permit Issuance Date: 9/13/13

Please sign this certification and return it to the following address upon completion of the activity and any mitigation required by the permit. You must submit this after the mitigation is complete, but not the mitigation monitoring, which requires separate submittals.

```
*********************************************************************
* MAIL TO: U.S. Army Corps of Engineers, New England District       *
*          Permits and Enforcement Branch C                         *
*          Regulatory Division                                      *
*          696 Virginia Road                                        *
*          Concord, Massachusetts 01742-2751                        *
*********************************************************************
```

Please note that your permitted activity is subject to a compliance inspection by an U.S. Army Corps of Engineers representative. If you fail to comply with this permit you are subject to permit suspension, modification, or revocation.

I hereby certify that the work authorized by the above referenced permit was completed in accordance with the terms and conditions of the above referenced permit, and any required mitigation was completed in accordance with the permit conditions.

_____ _____
Signature of Permittee Date

_____ _____
Printed Name Date of Work Completion

( ) _____ ( ) _____
Telephone Number Telephone Number

Applicant: General Public, State of Maine

Effective Date: October 12, 2010
Expiration Date: October 12, 2015

DEPARTMENT OF THE ARMY
GENERAL PERMIT
STATE OF MAINE

The New England District of the U.S. Army Corps of Engineers (Corps) hereby issues this General Permit (GP) for activities in waters of the United States (U.S.) that have no more than minimal individual, secondary, and cumulative adverse effects on the aquatic environment in waters of the U.S. within the boundaries of and off the coast of the State of Maine.

I. GENERAL CRITERIA

In order for activities to qualify for this GP, they must meet the GP's terms and eligibility criteria (Pages 1 – 4), general conditions (GC) (Pages 5 – 18), and Appendix A - Definition of Categories.

Under this GP, projects may qualify for the following:

- Category 1: Category 1 Notification Form required.
  (Submittal of the Category 1 Notification Form at Appendix B to the Corps is required.
- Category 2: Application required.
  (Submittal of an application to the Corps is required and written approval from the Corps must be received.

If your project is ineligible for Category 1, it may qualify for Category 2 or an Individual Permit and you must submit an application (see Page 3). The thresholds for Categories 1 and 2 are defined in Appendix A. This GP does not affect the Corps Individual Permit review process or activities exempt from Corps regulation.

II. ACTIVITIES COVERED:

- Work and structures that are located in, under or over any navigable water of the U.S.[1] that affect the course, location, condition, or capacity of such waters; or the excavating from or depositing of material in such waters. The Corps regulates this under Section 10 of the Rivers and Harbors Act of 1899);
- The discharge of dredged or fill material into waters of the U.S[2]. The Corps regulates this under Section 404 of the Clean Water Act (CWA).[3]
- The transportation of dredged material for the purpose of disposal in the ocean. The Corps regulates this under Section 103 of the Marine Protection, Research and Sanctuaries Act.

[1] Defined at 33 CFR 329 and Appendix A, Page 4.
[2] Defined at 33 CFR 328
[3] When there is a regulated discharge of dredged or fill material into waters of the U.S., the Corps will also consider secondary impacts, which are defined at Appendix A, Endnote/Definition 2.

III. PROCEDURES:

1. State Approvals

Applicants are responsible for applying for and obtaining any of the required state or local approvals (see GC 1, Page 5). Federal and state jurisdictions may differ in some instances. State permits may be required for specific projects regardless of the general permit category.

In order for authorizations under this GP to be valid, when any of the following state approvals or statutorily-required reviews is also required, the approvals must be obtained prior to the commencement of work in Corps jurisdiction.

- Maine Department of Environmental Protection (DEP): Natural Resources Protection Act (NRPA) permit, including permit-by-rule and general permit authorizations; Site Location of Development Act permit; and Maine Waterway Development and Conservation Act permit.
- Maine Department of Conservation: Land Use Regulation Commission (LURC) permit.
- Maine Department of Marine Resources: Aquaculture Leases.
- Maine Department of Conservation, Bureau of Parks and Lands, Submerged Lands: Lease

NOTE: This GP may authorize projects that are not regulated by the State of Maine (e.g., seasonal floats or moorings).

2. Corps Authorizations

a. <u>Category 1 (Submission of Category 1 Notification Form required)</u>

Eligibility Criteria

Activities in Maine that:

- Are subject to Corps jurisdiction (see GC 2, Page 5),
- Meet the terms and eligibility criteria of this GP (Pages 1 - 4),
- Meet all GCs of this GP (Pages 5 – 18), and
- Meet the definition of Category 1 in Appendix A - Definition of Categories,

may proceed without application to the Corps provided:

- The Category 1 Notification Form (Appendix B) is submitted to the Corps before starting the work authorized by this GP.

Consultation with the Corps and/or outside experts may be necessary to ensure compliance with this GP's general conditions (starting on Page 5) and related federal laws such as the National Historic Preservation Act, the Endangered Species Act (ESA), and the Wild and Scenic Rivers Act. For example, experts on historic resources may include the agencies and tribes referenced in GC 8, while experts on endangered species include the U.S. Fish and Wildlife Service (USFWS) and National Marine Fisheries Service (NMFS). Project proponents are encouraged to contact the Corps with Category 1 eligibility questions.

Work that is not regulated by the State of Maine, but is subject to Corps jurisdiction, is eligible for Category 1 authorization under this GP. The Maine DEP and LURC have waived WQC for projects authorized under Categories 1 and 2 of this GP. The state has concurred with the determination that projects authorized under Categories 1 and 2 of this GP are consistent with the enforceable policies of the Maine CZM Program.

b. Category 2 (Application to and written approval from the Corps required)

Eligibility Criteria
Activities in Maine that:

- Are subject to Corps jurisdiction (see GC 2, Page 5),
- Meet the terms of this GP (Pages 1 - 4),
- Meet all GCs of this GP (Pages 5 - 18),
- Meet the definition of Category 2 in Appendix A - Definition of Categories,

require an application to and written approval from the Corps. The Corps will coordinate review of Category 2 activities with federal and state agencies, as appropriate. To be eligible and subsequently authorized, an activity must result in no more than minimal impacts to the aquatic environment as determined by the Corps based on comments from the review team and the criteria listed above. This may require project modifications involving avoidance, minimization or compensatory mitigation for unavoidable impacts to ensure the net effects of a project are minimal. Compensatory mitigation for waterway/wetland impacts may take the form of wetland preservation, restoration, enhancement, creation, and/or "in-lieu fee" for inclusion into the Natural Resources Mitigation Fund. See www.nae.usace.army.mil/reg, "Mitigation" and then "Maine" for more information.

Work that is not regulated by the State of Maine, but is subject to Corps jurisdiction, is eligible for Category 2 authorization under this GP. The Maine DEP and LURC have waived WQC for projects authorized under Categories 1 and 2 of this GP. The state has concurred with the determination that projects authorized under Categories 1 and 2 of this GP are consistent with the enforceable policies of the Maine CZM Program.

3. Applying for a Permit

All applicants for Category 2 projects must:

a. Apply directly to the Corps using the state application form or the Corps application form (ENG Form 4345[1]), and apply directly to the state (DEP, LURC, BPL or DMR) as applicable using the appropriate state form, if the work is regulated by the Corps and the state.

b. Apply directly to the Corps using the Corps application form (ENG Form 4345[1]) if the work is regulated by the Corps but not the state (DEP, LURC, BPL or DMR).

c. Provide application information (see "Information Typically Required" in Appendix C) to help ensure the application is complete and to speed project review.

d. Submit a copy of their application materials to the Maine Historic Preservation Commission (MHPC) and the five Indian tribes listed at Appendix D, at the same time, or before, they apply to the state (DEP or LURC) or the Corps, to be reviewed for the presence of historic, archaeological or tribal resources in the permit area that the proposed work may affect. Submittals to the DEP or Corps shall include information to indicate that this has been done (a copy of the applicant's cover letter to MHPC and tribes or a copy of the MHPC and tribal response letters is acceptable).

[1] Located at www.nae.usace.army.mil/reg under "Forms."

4. Review Procedures

The Corps will coordinate review of all Category 2 activities with federal and state agencies, as appropriate, to ensure that the work will result in no more than a minimal impact to the aquatic environment. Applicants are responsible for applying for the appropriate state and local approvals listed on Page 2.

Emergency Procedures: 33 CFR 325.2(e)4 states that an "emergency" is a situation which would result in an unacceptable hazard to life, a significant loss of property, or an immediate, unforeseen, and significant economic hardship if corrective action requiring a permit is not undertaken within a time period less than the normal time needed to process the application under standard procedures." The Corps will work with all applicable agencies to expedite authorization according to established procedures in emergency situations.

Individual Permit Procedures: Proponents of work that does not meet the terms and general conditions of this GP must submit the Corps application form and the appropriate application materials to the Corps at the earliest possible date in order to expedite the Individual Permit review process. General information and application forms can be obtained at our website or by calling us (see Appendix D). Individual WQC and CZM consistency concurrence are required when applicable from the State of Maine before Corps permit issuance. The Corps encourages applicants to concurrently apply for a Corps Individual Permit and state permits.

5. Approval Process

Applicants for Category 2 activities may not proceed with work in Corps jurisdiction until written authorization is received from the Corps. If the Corps determines that the Category 2 activity is eligible for the GP, the Corps will send an authorization letter directly to the applicant. The Corps will attempt to issue a written eligibility determination within the state's review period. If the Corps determines that the activity is not eligible under the GP or that additional information is required, the Corps will notify the applicant in writing and send a copy to the DEP or LURC. Applicants are responsible for obtaining all applicable approvals listed on Page 2 from the appropriate state and local agencies before commencing work in Corps jurisdiction.

V. GENERAL PERMIT CONDITIONS:

The following conditions apply to activities authorized under this Maine GP, unless otherwise specified, including all Category 1 (notification required) and Category 2 (application required) activities:

1. Other Permits. Authorization under this GP does not obviate the need to obtain other federal, state, or local authorizations required by law. This includes, but is not limited to, the project proponent obtaining a Flood Hazard Development Permit issued by the town, if necessary. Inquiries may be directed to the municipality or to the Maine Floodplain Management Coordinator at (207) 287-8063. See www.maine.gov/spo/flood.

2. Federal Jurisdictional Boundaries.
(a) Applicability of this GP shall be evaluated with reference to federal jurisdictional boundaries. Applicants are responsible for ensuring that the boundaries used satisfy the federal criteria defined at 33 CFR 328 "Waters of the U.S." and 33 CFR 329 "Navigable Waters of the U.S."
Note: Waters of the U.S. include the subcategories "navigable waters of the U.S." and "wetlands."
(b) For Category 1 projects, proponents are not required to delineate the waters of the U.S. that they plan to impact, but must approximate the square footage of impacts in order to determine the review category (1 or 2 or Individual Permit). For projects filling <15,000 SF of waters of the U.S. that do not qualify for Category 1 (e.g., vernal pool, secondary or endangered species impacts, etc.) and therefore require an application to the Corps, and for those filling ≥15,000 SF, applicants shall delineate all waters of the U.S. that will be filled (direct impacts) in accordance with the Corps of Engineers Wetlands Delineation Manual and the most recent regional supplements (see Appendix E). In addition, applicants shall approximately identify all waters of the U.S. on the property and known waters adjacent to the property in order for the Corps to evaluate secondary impacts. The waters of the U.S. shall be clearly shown on the project plans submitted with the application. This includes all waters of the U.S. in areas under DEP or LURC jurisdiction regardless of whether they're shown on LURC zoning maps.
(c) On a case-by-case basis, the Corps may modify/refine the above delineation and identification requirements for waters of the U.S.

3. Minimal Direct, Secondary and Cumulative Impacts.
(a) Projects authorized by this GP shall have no more than minimal direct, secondary and cumulative adverse environmental impacts. Category 2 applicants should provide information on secondary and cumulative impacts as stated in Appendix C. Compensatory mitigation may be required to offset unavoidable impacts (see GC 16) and to ensure that they are no more than minimal. Compensatory mitigation requirements will be determined on a case-by-case basis.
(b) Secondary impacts to waterway and/or wetland areas, (e.g., areas drained, flooded, cleared, excavated or fragmented) shall be added to the total fill area when determining whether the project qualifies for Category 1 or 2. Direct, secondary and cumulative impacts are defined at Appendix A, Endnote 2.
(c) Site clearing, grading and construction activities in the upland habitat surrounding vernal pools ("Vernal Pool Management Areas") are secondary impacts. See GC 28 for avoidance and minimization requirements and recommendations.

4. Discretionary Authority. Notwithstanding compliance with the terms and conditions of this permit, the Corps retains discretionary authority to require Category 2 or Individual Permit review based on concerns for the aquatic environment or for any other factor of the public interest [33 CFR

320.4(a)]. This authority is invoked on a case-by-case basis whenever the Corps determines that the potential consequences of the proposal warrant a higher level of review based on the concerns stated above. This authority may be invoked for projects that may contribute to cumulative environmental impacts that are more than minimal or if there is a special resource or concern associated with a particular project that is not already covered by the remaining conditions of the GP and that warrants greater review. Whenever the Corps notifies an applicant that an Individual Permit may be required, the project is not authorized under this GP and no work may be conducted until an Individual Permit is obtained or until the Corps notifies the applicant that further review has demonstrated that the work may proceed under this GP.

5. Single and Complete Projects.
(a) This GP shall not be used to piecemeal work and shall be applied to single and complete projects[1]. When determining the review category in Appendix A (Category 1 or 2) for a single and complete project, proponents must include any permanent historic fill placed since October 1995 that is associated with that project and all currently proposed temporary and permanent impact areas.
(b) A single and complete project must have independent utility[1].
(c) Unless the Corps determines the activity has independent utility[1]:
i. This GP shall not be used for any activity that is part of an overall project for which an Individual Permit is required,
ii. All components of a single project and/or all planned phases of a multi-phased project (e.g., subdivisions should include all work such as roads, utilities, and lot development) shall be treated together as constituting one single and complete project[1].
(d) For linear projects, such as power lines or pipelines with multiple crossings, the single and complete project[1] is all crossings of a single water of the U.S. (i.e., single waterbody) at a specific location. For linear projects crossing a single waterbody several times at separate and distant locations, each crossing is considered a single and complete project. However, individual channels in a braided stream or river, or individual arms of a large, irregularly-shaped wetland or lake, etc., are not separate waterbodies and crossings of such features cannot be considered separately. If any crossing requires a Category 2 activity, then the entire linear project shall be reviewed as one project under Category 2.

6. Permit On-Site. For Category 2 projects, the permittee shall ensure that a copy of this GP and the accompanying authorization letter are at the work site (and the project office) authorized by this GP whenever work is being performed, and that all personnel with operation control of the site ensure that all appropriate personnel performing work are fully aware of its terms and conditions. The entire permit authorization shall be made a part of any and all contracts and sub-contracts for work that affects areas of Corps jurisdiction at the site of the work authorized by this GP. This shall be achieved by including the entire permit authorization in the specifications for work. The term "entire permit authorization" means this GP and the authorization letter (including its drawings, plans, appendices and other attachments) and also includes permit modifications. If the authorization letter is issued after the construction specifications, but before receipt of bids or quotes, the entire permit authorization shall be included as an addendum to the specifications. If the authorization letter is issued after receipt of bids or quotes, the entire permit authorization shall be included in the contract or sub-contract. Although the permittee may assign various aspects of the work to different contractors or sub-contractors, all contractors and sub-contractors shall be obligated by contract to comply with all environmental protection provisions contained within the entire GP authorization, and no contract or sub-contract shall require or allow unauthorized work in areas of Corps jurisdiction.

[1] Single and Complete Project and Independent Utility are defined at Appendix E.

7. St. John/St. Croix Rivers. Work within the Saint John and Saint Croix River basins that requires approval of the International Joint Commission is not eligible for Category 1 and an application to the Corps is required if any temporary or permanent use, obstruction or diversion of international boundary waters could affect the natural flow or levels of waters on the Canadian side of the line; or if any construction or maintenance of remedial works, protective works, dams, or other obstructions in waters downstream from boundary waters could raise the natural level of water on the Canadian side of the boundary.

8. Historic Properties. No activity otherwise authorized by this GP shall result in effects (as that term is defined at 36 C.F.R. § 800.16(i)) on properties listed on, determined to be eligible for listing on, or potentially eligible for listing on the National Register of Historic Places, including previously unidentified properties, unless and until the Corps or another federal agency has satisfied the consultation requirements of Section 106 of the National Historic Preservation Act. Work is not eligible for Category 1 and an application to the Corps is required if the activity may have the potential to cause effects to any historic properties listed, determined to be eligible for listing on, or potentially eligible for listing on the National Register of Historic Places, including previously unidentified properties. Work is eligible for Category 1 if a no effect or no adverse effect determination has been made for that work by another federal action agency in its Section 106 consultation with the Maine Historic Preservation Commission (MHCP) and the five federally recognized Indian tribes listed at Appendix D. Information on the location and existence of known historic resources can be obtained from the MHPC, the National Register of Historic Places, and the five tribes listed in Appendix D. Historic properties include those that are eligible for inclusion, but not necessarily listed on the National Register. If the permittee, either prior to construction or during construction of the work authorized herein, encounters a previously unidentified archaeological or other cultural resource within the area subject to Corps jurisdiction that might be eligible for listing in the National Register of Historic Places, he/she shall stop work and immediately notify the Corps and the MHPC and/or applicable tribe(s).

9. National Lands. None of the following work is eligible as a Category 1 project**:**
(a) Activities that impinge upon the value of any National Wildlife Refuge, National Forest, National Marine Sanctuary, National Park or any other area administered by the National Park Service, U.S. Fish and Wildlife Service (USFWS) or U.S. Forest Service.
(b) Work on Corps properties and Corps-controlled easements. Contact the Corps, Real Estate Division (978) 318-8585 to initiate reviews about both Corps holdings and permit requirements.
(c) Any proposed temporary or permanent modification or use of a federal project (including but not limited to a levee, dike, floodwall, channel, sea wall, bulkhead, jetty, wharf, pier, or other work built but not necessarily owned by the United States), which would obstruct or impair the usefulness of the federal project in any manner, and/or would involve changes to the authorized federal project's scope, purpose, and/or functioning that go beyond minor modifications required for normal operation and maintenance (requires review and approval by the Corps pursuant to 33 USC 408). Federal projects in Maine as of October 2010 are shown at Appendix F. This map may not be inclusive of all projects.

10. Endangered Species.
(a) No activity may be authorized under Category 1 of this GP which:
i. "May affect" a threatened or endangered species, a species proposed for listing as threatened or endangered, or designated or proposed critical habitat (all herein referred to as "listed species or habitat") as identified under the federal Endangered Species Act (ESA) (unless specified in a programmatic agreement with NMFS or USFWS),

ii. Results in a "take" of any federally-listed threatened or endangered species of fish or wildlife, or

iii. Results in any other violation of Section 9 of the ESA protecting threatened or endangered species of plants.

(b) Work in Inland Waters and Wetlands[1] and the non-tidal portions of Navigable Waters[2] (e.g., the Penobscot River, Kennebec River) is not eligible for Category 1 if:

i. The project action area occurs within a watershed occupied by listed Atlantic salmon or shortnose sturgeon. Project proponents must check the site in Footnote 3 below.

ii. In areas outside these watersheds contact the USFWS (see Appendix D, Page 1 for contact information) to check for the presence of other listed species.

(c) Work in the tidal portions of Navigable Waters may be eligible for Category 1. Reference Appendix A, II. Navigable Waters, Pages 4 – 9, and the other terms and general conditions (GC 11 is particularly relevant) of this GP to determine Category 1 eligibility. Project proponents must contact the USFWS (see Appendix D, Page 1 for contact information) to ensure that work in all tidal portions of Navigable Waters[2] is not in critical habitat or areas occupied by listed species other than Atlantic salmon or shortnose sturgeon.

(d) Although some work is excluded from Category 1 as stated in (b) and (c) above, work may qualify for Category 1 if a no effect determination has been made for that work by a federal action agency such as the Corps.

(e) Proponents must submit an application to the Corps if any of the activities in 10(a)-10(c) that do not qualify for Category 1 may occur and provide information on federally-listed species or habitat to allow the Corps to conduct any required consultation under Section 7 of the ESA.

(f) The Corps review may consider species listed as endangered and threatened pursuant to Maine state law.

11. Essential Fish Habitat. Any work in the following rivers and streams, including all tributaries to the extent that they are currently or were historically accessible for salmon migration, shall not be authorized under Category 1 of the GP and must be screened for potential impacts to EFH (see Appendix E for more information).

Androscoggin River	Aroostook River	Boyden River	Dennys River
Ducktrap River	East Machias River	Hobart Stream	Kennebec River
Machias River	Narraguagus River	Orland River	Passagassawaukeag River
Patten Stream	Penobscot River	Pleasant River	Presumpscot River
Saco River	Sheepscot River	St. Croix River	Tunk Stream
			Union River

The above does not apply to the following activities which may qualify for Category 1 work:

- Exploratory drilling and borings for bridges.
- Moorings (see Appendix A, Page 6 for Category 1 thresholds and requirements)
- Structures and floats (see Appendix A, Page 7 for Category 1 thresholds and requirements)
- Other activities specified in a programmatic agreement with NMFS.

---

[1] See Appendix A, Page 1 for definition.

[2] See Appendix A, Page 4 for definition.

[3] For areas considered occupied by listed Atlantic salmon and/or shortnose sturgeon in Inland Waters and Wetlands, and in Navigable Waters, see: www.nero.noaa.gov/prot_res/altsalmon/dpsmaps.html. Tidal portions of navigable waters occupied by listed Atlantic salmon are more specifically described as those waters from the Kennebec River to its mouth at Merrymeeting Bay, northeast to the Dennys River, including the Androscoggin River upstream to the Brunswick Dam, and other streams northeast of this line to the limit of their tidal reaches.

12. Wild and Scenic Rivers. Any activity that occurs in the designated main stem of, within 0.25 mile up or downstream of the designated main stem of, or in tributaries within .25 miles of the designated main stem of a National Wild and Scenic River, or in "bordering and contiguous wetlands" (see Appendix A, Endnote 1) that are adjacent to the designated main stem of a National Wild and Scenic River, or that has the potential to alter flows within a river within the National Wild and Scenic River System, is not eligible for Category 1 regardless of size of the impacts. This condition applies to both designated Wild and Scenic Rivers and rivers officially designated by Congress as study rivers for possible inclusion while such rivers are in an official study status. National Wild and Scenic Rivers System segments for Maine as of October 2010 include: Allagash River beginning at Telos Dam continuing to Allagash checkpoint at Eliza Hole Rapids, approximately 3 miles upstream of the confluence with the St. John River (length = 92 miles).

13. Federal Navigation Project. Any structure or work that extends closer to the horizontal limits of any Corps Federal Navigation Project (see Appendix F) than a distance of three times the project's authorized depth shall be subject to removal at the owner's expense prior to any future Corps dredging or the performance of periodic hydrographic surveys. This is applicable to Category 1 and 2. Reference Appendix A, Page 6 (Moorings) and Page 7 (Structure and Floats).

14. Navigation.
(a) There shall be no unreasonable interference with navigation by the existence or use of the activity authorized herein and no attempt shall be made by the permittee to prevent the full and free use by the public of all navigable waters at or adjacent to the activity authorized herein.
(b) The permittee understands and agrees that, if future U.S. operations require the removal, relocation, or other alteration, of the structure or work herein authorized, or if, in the opinion of the Secretary of the Army or his authorized representative, said structure or work shall cause unreasonable obstruction to the free navigation of the navigable waters, the permittee will be required, upon due notice from the Corps, to remove, relocate, or alter the structural work or obstructions caused thereby, without expense to the U.S. No claim shall be made against the U.S. on account of any such removal or alteration.

15. Federal Liability. In issuing this permit, the Federal Government does not assume any liability for the following: (a) damages to the permitted project or uses thereof as a result of other permitted or unpermitted activities or from natural causes; (b) damages to the permitted project or uses thereof as a result of current or future activities undertaken by or on behalf of the U.S. in the public interest; (c) damages to persons, property, or to other permitted or unpermitted activities or structures caused by the activity authorized by this permit; (d) design or construction deficiencies associated with the permitted work; (e) damage claims associated with any future modification, suspension, or revocation of this permit.

16. Avoidance, Minimization and Compensatory Mitigation.
Discharges of dredged or fill material into waters of the U.S., including wetlands, shall be avoided and minimized to the maximum extent practicable through consideration of alternatives. The Corps may require compensatory mitigation of unavoidable direct and secondary impacts associated with Category 2 projects on a case-by-case basis (see Appendix E).

17. Heavy Equipment in Wetlands. Operating heavy equipment other than fixed equipment (drill rigs, fixed cranes, etc.) within wetlands shall be minimized, and such equipment shall not be stored, maintained or repaired in wetlands, to the maximum extent practicable. Where construction requires heavy equipment operation in wetlands, the equipment shall either have low ground pressure

(typically <3 psi), or it shall be placed on swamp/construction/timber mats (herein referred to as "construction mats" and defined at Appendix A, Endnote 4) that are adequate to support the equipment in such a way as to minimize disturbance of wetland soil and vegetation. Construction mats are to be placed in the wetland from the upland or from equipment positioned on swamp mats if working within a wetland. Dragging construction mats into position is prohibited. Other support structures that are capable of safely supporting equipment may be used with written Corps authorization (Category 2 authorization or Individual Permit). Similarly, the permittee may request written authorization from the Corps to waive use of mats during frozen, dry or other conditions. An adequate supply of spill containment equipment shall be maintained on site.

18. Temporary Fill.
Temporary fill that qualifies for Category 1 (e.g., <15,000 SF of combined temporary and permanent fill associated with the single and complete project) or is authorized in writing under Category 2, shall adhere to the following:
(a) All temporary fill shall be stabilized to prevent its eroding into portions of waters of the U.S., including wetlands, where it is not authorized.
(b) Unconfined temporary fill authorized for discharge into waters of the U.S., including wetlands, shall consist of material that minimizes impacts to water quality (e.g. sandbags, clean gravel, stone, aggregate, etc.).
(c) Temporary fill authorized for discharge into wetlands should be placed on geotextile fabric or other material (e.g., straw) laid on the pre-construction wetland grade where practicable to minimize impacts.
(d) Temporary fill shall be removed as soon as it is no longer needed, disposed of at an upland site, and suitably contained to prevent subsequent erosion into waters of the U.S, including wetlands.
To qualify for Category 1, temporary fill placed during the:
i. Growing season must be removed before the beginning of the next growing season.
ii. Non-growing season may remain throughout the following growing season, but must be removed before the beginning of the next growing season.
(e) Waters of the U.S., including wetlands, where temporary fill was discharged shall be restored (see GC 19).
(f) Appropriate measures must be taken to maintain normal downstream flows and minimize flooding to the maximum extent practicable, when temporary structures, work, and discharges, including cofferdams, are necessary for construction activities, access fills, or dewatering of construction sites. Temporary fills must be placed in a manner that will not be eroded by expected high flows (see GC 21).
(g) Construction mats and corduroy roads (see GC 17 above) are considered as temporary fill when they are removed immediately upon work completion. The area must be restored (see GC 19).

19. Work Site Restoration.
(a) Wetland areas where permanent disturbance is not authorized shall be restored to their original condition and elevation, which under no circumstances shall be higher than the pre-construction elevation. Original condition means careful protection and/or removal of existing soil and vegetation, and replacement back to the original location such that the original soil layering and vegetation schemes are approximately the same, unless otherwise authorized.
(b) Upon completion of construction, all disturbed wetland areas (the disturbance of these areas must be authorized) shall be properly stabilized. Any seed mix shall contain only plant species native to New England and shall not contain any species listed in the "Invasive and Other Unacceptable Plant Species" Appendix in the "New England District Compensatory Mitigation Guidance" (see Appendix E, Paragraph 6). This list may be updated periodically.
(c) In areas of authorized temporary disturbance, if trees are cut they shall be cut at ground level and

not uprooted in order to prevent disruption to the wetland soil structure and to allow stump sprouts to revegetate the work area, unless otherwise authorized.

20. Bank Stabilization.
(a) Projects involving construction or reconstruction/maintenance of bank stabilization structures within Corps jurisdiction shall be designed to minimize environmental effects, effects to neighboring properties, scour, etc. to the maximum extent practicable.
(b) Project proponents must design and construct bank stabilization projects using this sequential minimization process: avoidance of aquatic resource impacts, diversion of overland flow, vegetative stabilization, stone-sloped surfaces, and walls/bulkheads. Vertical walls/bulkheads shall only be used in situations where reflected wave energy can be tolerated. Refer to Appendix E for design guidance.
(c) Inland Water bank stabilization activities necessary for erosion prevention must meet all of the following criteria: **(i)** No material is placed in excess of the minimum needed for erosion protection; **(ii)** The activity is no more than 500 feet in length along the bank; **(iii)** The activity will not exceed an average of one cubic yard per running foot placed along the bank below the plane of the ordinary high water mark; **(iv)** Structures angled steeper than 1H:1V and any material other than angular or subangular stone or fiber roll revetments require at least a Category 2 review. **(v)** The activity does not involve discharges of dredged or fill material into special aquatic sites; **(vi)** No material is of the type, or is placed in any location, or in any manner, to impair surface water flow into or out of any water of the U.S.; **(vii)** No material is placed in a manner that will be eroded by normal or expected high flows (properly anchored trees and treetops may be used in low energy areas); and, **(viii)** The activity is not a stream channelization activity.
(d) Navigable Water bank stabilization activites are provided at Appendix A, Page 4.

21. Sedimentation and Erosion Control.
(a) Adequate sedimentation and erosion control management measures, practices and devices, such as phased construction, installation of sediment control barriers (i.e. silt fence, vegetated filter strips, geotextile silt fences, erosion control mixes, hay bales or other devices) downhill of all exposed areas, retention of existing vegetated buffers, application of temporary mulching during construction, and permanent seeding and stabilization shall be installed and properly maintained to reduce erosion and retain sediment on-site during and after construction. They shall be capable of preventing erosion, of collecting sediment, suspended and floating materials, and of filtering fine sediment.
(b) Temporary sediment control barriers shall be removed upon completion of work, but not until all disturbed areas are permanently stabilized. The sediment collected by these sediment barriers shall be removed and placed at an upland location and stabilized to prevent its later erosion into a waterway or wetland.
(c) All exposed soil and other fills shall be permanently stabilized at the earliest practicable date (see GC 19).

22. Stream Work and Crossings[1].

Notes:

(a) GC 22(a) and (b) apply to Inland Waters and Wetlands (see Appendix A, Page 1 for definition) and Navigable Waters (see Appendix A, Page 4 for definition). GC 22(c)-(l) only apply to Inland Waters and Wetlands that are streams. All new and replacement crossings in Navigable Waters require an application to the Corps and at least a Category 2 review.

(b) In-stream work in a watershed occupied by listed Atlantic salmon or shortnose sturgeon [see GC 10(b)] and some stream work such as crossings on EFH waters (see GC 11) is not eligible for Category 1.

(c) "High-Quality Stream Segments" are shown at www.maine.gov/dep/gis/datamaps and may be useful in evaluating impacts to fisheries. GIS shape files are under "Other Google Earth Interactive Maps" and PDFs by county are under "DEP GIS Maps." See Appendix E, 8(b) for more information.

Conditions:

(a) All permanent crossings of rivers, streams, brooks, etc. (hereon referred to as "streams") shall be suitably culverted, bridged, or otherwise designed to **i)** withstand and to prevent the restriction of high flows to qualify for Category 1, and **ii)** not obstruct the movement of or not substantially disrupt the necessary life-cycle movements of those species of aquatic life indigenous to the waterbody, including those species that normally migrate through the area, beyond the actual duration of construction unless the activity's primary purpose is to impound water to qualify for Category 1 or 2. (NOTE: Areas of fill and/or cofferdams must be included in total waterway/wetlands impacts to determine applicability of this GP).

(b) Any work that temporarily or permanently impacts upstream or downstream flood conditions, or permanently impacts wetlands in excess of Category 1 thresholds, must be reviewed at least under Category 2. See the documents referenced in Appendix E, 8(c) and (d) for guidance.

(c) New Stream Crossings. For new stream crossings to qualify for Category 1:

i. Must ensure compliance with GC 22(a) and GC 22(b) above.

ii. Shall be designed and constructed in accordance with the Corps General Stream Crossing Standards provided on Page 14 and the stream simulation document listed at Appendix E, 8(a).

(d) Replacement Stream Crossings. For replacement stream crossings to qualify for Category 1:

i. Must ensure compliance with GC 22(a) and GC 22(b) above.

ii. Shall be designed and constructed in accordance with the Corps General Stream Crossing Standards provided on Page 14 and the stream simulation document listed at Appendix E, 8(a).

(e) Culvert Extensions. Culvert extensions on culverts that do not meet the Corps General Stream Crossing Standards do not qualify for Category 1 and require an application to the Corps at least as a Category 2 project.

(f) Temporary Stream Crossings.

Note: The General Stream Crossing Standards don't apply to temporary stream crossings.

i. Temporary stream crossings or cofferdams shall be used for equipment access across streams [see Appendix E, 8(e)]. Note: Areas of fill and/or cofferdams must be included in total waterway/wetlands impacts to determine the review category in Appendix A.

ii. Temporary stream crossings shall be removed within 180 days to qualify for Category 1.

iii. Temporary stream crossings that are not spans[2] (typically culverts) must be designed in accordance with 1-6 below to qualify for Category 1. Category 2 applications should include information demonstrating 2-6 below:

---

[1] This condition does not apply to non-tidal drainage systems and irrigation ditches excavated on dry land.

[2] For the purposes of this GP, spans are bridges, three-sided box culverts, open-bottom culverts or arches that span the stream with footings landward of bankfull width.

1. Installed and removed during the low flow period specified in GC 22(l) below.

2. Placed on geotextile fabric or other material where practicable to ensure restoration to the original grade. Soil may not be used to construct or stabilize these structures and rock must be large enough to allow for easy removal without disrupting the streambed.

3. Designed and maintained to withstand and pass high flows. Water height should be no higher than the top of the culvert's inlet. A minimum culvert diameter of two feet is required to pass debris. Culverts must be aligned to prevent bank erosion or streambed scour.

4. Equipped with energy dissipating devices installed downstream if necessary to prevent scour.

5. Designed and maintained to prevent soil from entering the waterbody.

6. Removed upon the completion of work. Impacts to the streambed or banks requires restoration to their original condition using stream simulation methods[1].

(g) Slip Lining. Work using slip lining (retrofitting an existing culvert by inserting a smaller diameter pipe), invert lining, or resulting in decreased diameter, do not qualify for Category 1, either as new work or maintenance activities.

(h) Work in Flowing Waters. To qualify for Category 1, no unconfined fill [see GC 18(b)] or excavation in flowing waters is allowed. To accomplish this:

i. Bank stabilization work below ordinary high water (OHW) shall utilize erosion controls such as inflatable cofferdams, jersey barrier, silt screen, turbidity curtain, etc. where practicable to prevent sediment input to the stream and to minimize turbidity and sedimentation impacts for sensitive life stages. Bank stabilization above OHW must utilize erosion controls.

ii. Management techniques such as temporary flume pipes, culverts, cofferdams, etc. must be used to maintain normal flows within the stream boundary's confines, or water diversions may be used immediately up and downstream of the work footprint (see Appendix A, Endnote 6) or work must be performed in the dry under no flow conditions, or under very low flow conditions following the practices in GC 22(a).

(i) Minimization. In order to make the Category 2 review process more efficient and result in a faster decision, new and replacement stream crossings should be designed using the least intrusive and environmentally damaging method following this sequential minimization process: 1) spans with no stream impacts, 2) spans with stream impacts, and 3) embedded culverts with stream simulation or low-slope design.

(j) Maintenance Requirements. The permittee shall maintain the work authorized herein in good condition and in conformance with the terms and general conditions of this permit to facilitate aquatic life passage as stated in GC 22(a). Culverts that develop "hanging" inlets or outlets, result in bed washout, or a stream that doesn't match the characteristics of the substrate in the natural stream channel such as mobility, slope, stability confinement will require maintenance or repair to comply with this GC. This does not apply to GC 22(f) above.

(k) Maintenance and Replacement Information. An existing stream crossing must be authorized and in compliance with all conditions of its authorization(s) to qualify for maintenance not subject to regulation. See Appendix A, Endnote 7. A non-serviceable crossing is not eligible for maintenance and is therefore considered as a replacement crossing [see 22(d)].

(l) Work Window. For projects that otherwise meet the terms of Category 1, in-stream construction work shall be conducted during the low flow period July 15 - October 1 in any year. Projects that are not to be conducted during that time period are ineligible for Category 1 and shall be screened pursuant to Category 2, regardless of the waterway and wetland fill and/or impact area.

(See next page for Corps General Stream Crossing Standards.)

[1] Design and construction shall be in accordance with the stream simulation document listed at Appendix E, 8(a).

Corps General Stream Crossing Standards (required for Category 1, recommended for Category 2):
(a) Culverts must be embedded:

- ≥ 2 feet for box culverts and other culverts with smooth internal walls,
- ≥ 1 foot for corrugated pipe arches
- ≥ 1 foot and at least 25 percent for corrugated round pipe culverts

(b) For new crossings, spans[1] are required to avoid or cause minimal disruption to the streambed and to meet the requirements of General Condition 22(a) and 22(b). Footings and abutments must be landward of 1.2 times bankfull width. To the greatest extent practicable, work in the stream shall be minimized, and design and construction shall allow the streambed's natural structure and integrity to remain intact. Any fill or excavation of the streambed below bankfull width other than footings, support pilings, or work specified in 22(h)ii requires Category 2 review and, unless demonstrated otherwise, stream simulation[2] to establish substrate and banks in the span structure and work area as specified in (d) and (e) below.
(c) For replacement crossings, spans[1] are required to meet the requirements of General Condition 22(a) and 22(b). Footings and abutments shall be landward of 1.2 times bankfull width. Unless demonstrated otherwise, stream simulation[2] is required to establish substrate and banks in the span structure and work area as specified in (d) and (e) below.
(d) Crossings must have a natural bottom substrate within the structure matching the characteristics of the substrate in the natural stream channel and the banks (mobility, slope, stability, confinement, grain and rock size)[2] at the time of construction and over time as the structure has had the opportunity to pass significant flood events. To allow terrestrial passage for wildlife and prevent undermining the footings, crossings shall have a bank on both sides of the stream matching the horizontal profile of the existing stream and banks[2].
(e) Crossings must be designed and constructed[2] with appropriate bed forms and streambed characteristics so that water depths and velocities are comparable to those found in the natural channel at a variety of flows. In order to provide appropriate water depths and velocities at a variety of flows and especially low flows, it is usually necessary to reconstruct the streambed or preserve the natural channel within the structure. Otherwise, the width of the structure needed to accommodate higher flows will create conditions that are too shallow at low flows. The grain and rock size, and arrangement of streambed materials within the structure should be in accordance with (d) above. Flows could go subsurface within the structure if only large material is used without smaller material filling the voids.

23. Wetland Crossings.
(a) All temporary and permanent crossings of wetlands shall be suitably culverted, bridged, or otherwise designed to: **i)** Withstand and prevent the restriction of high flows, **ii)** Not obstruct the movement of or not substantially disrupt the necessary life-cycle movements of those species of aquatic life indigenous to the wetland, including those species that normally migrate through the area, beyond the actual duration of construction unless the activity's primary purpose is to impound water. See Appendix E for the Maine DEP's crossing standards.
(b) To qualify for Category 1, new and replacement wetland crossings that are permanent shall be culverted, spanned or bridged in such a manner as to preserve hydraulic and ecological connectivity, at its present level, between the wetlands on either side of the road. To meet this requirement, we

[1] For the purposes of this GP, spans are bridges, three-sided box culverts, open-bottom culverts or arches that span the stream with footings landward of bankfull width.
[2] Design and construction shall be in accordance with the stream simulation document listed at Appendix E, 8(a).

recommend that culverts, spans or bridges be placed at least every 50 feet with an opening at least 2 feet high and 3 feet wide at ground level where practicable. Closed bottom culverts shall be embedded at least 6 inches with a natural bottom.
(c) In the case of non-compliance, the permittee shall take necessary measures to correct wetland damage due to lack of hydraulic and ecological connectivity.
(d) Any work that results in flooding, results in impacts to wetlands on either side of the wetland crossing in excess of Category 1 thresholds, or impacts wetland drainage from the upgradient side of the wetland crossing does not qualify for Category 1.

24. Discharge of Pollutants.
(a) All activities involving any discharge of pollutants into waters of the U.S., including wetlands, authorized under this GP shall be consistent with applicable water quality standards, effluent limitations, standards of performance, prohibitions, and pretreatment standards and management practices established pursuant to the Clean Water Act (CWA) (33 USC 1251), and applicable state and local laws. If applicable water quality standards, limitations, etc., are revised or modified during the term of this GP, the authorized work shall be modified to conform with these standards within six months of the effective date of such revision or modification, or within a longer period of time deemed reasonable by the Corps in consultation with the EPA. Issuance of a LURC or DEP NRPA permit confirms that state water quality standards are met.
(b) All projects authorized by this GP shall be designed, constructed and operated to minimize or eliminate the discharge of pollutants.
(c) All activities involving any discharge of pollutants into waters of the U.S., including wetlands, authorized under this GP must comply with Section 402 [33 U.S.C. 1342] of the CWA and the requirements of the National Pollutant Discharge Elimination System (40 CFR 122).

25. Spawning, Breeding and Migratory Areas. Activities and impacts such as excavations, discharges of dredged or fill material, and/or suspended sediment producing activities, in fish migratory areas, fish and shellfish spawning or nursery areas, or amphibian and migratory bird breeding areas, during spawning or breeding seasons shall be avoided and minimized to the maximum extent practicable.

26. Storage of Seasonal Structures. Coastal structures, such as pier sections and floats, that are removed from the waterway for a portion of the year (often referred to as seasonal structures) shall be stored in an upland location located above mean high water (MHW) and not in tidal wetlands or mudflats. These seasonal structures may be stored on the fixed, pile-supported portion of the structure that is seaward of MHW. This is intended to prevent structures from being stored on the marsh substrate, mudflats, or the substrate seaward of MHW. Seasonal storage of structures in navigable waters, e.g., in a protected cove on a mooring, requires Corps and local harbormaster approval.

27. Environmental Functions and Values. The permittee shall make every reasonable effort to carry out the construction or operation of the work authorized herein in a manner that maintains as much as is practicable, and minimize any adverse impacts on existing fish, wildlife, and natural environmental functions and values.

28. Protection of Vernal Pools (VPs).
(a) Impacts to VP Management Areas[1] for all VPs on, and known VPs surrounding, the project site shall be minimized to the maximum extent practicable.
(b) The following management practices must be followed for all work within the VP Management Area (750' of a VP's edge) of all VPs in order to qualify for Category 1 when there is fill placed in a water of the U.S., including wetlands:

- **i.** Similar to the DEP's Significant Wildlife Habitat regulations[2]:
  1. No disturbance within the VP Depression or VP Envelope (area within 100 feet of the VP Depression's edge)[3];
  2. Maintain a minimum of 75% of the Critical Terrestrial Habitat (area within 100-750 feet of the VP Depression's edge) as unfragmented forest with at least a partly-closed canopy of overstory trees to provide shade, deep litter and woody debris[3];
  3. Maintain or restore forest corridors connecting wetlands and significant vernal pools;
  4. Minimize forest floor disturbance; and
  5. Maintain native understory vegetation and downed woody debris.
- **ii.** Cape Cod style-curbing or no curbing options shall be used on new roads to facilitate amphibian passage[2].

(c) For work not complying with the requirements in (b) above, applicants shall submit an application to the Corps for at least Category 2 review with information on directional buffers in accordance with the VP Directional Buffer Guidance document[2]. Conservation of the unimpacted area within the VP Management Area will often be required.
(d) GC 2 requires applicants to delineate or approximately identify on the project plans all waters of the U.S., which include vernal pools. Appendix A, Page 1 lists VP Category 1 thresholds.

29. Invasive Species.
(a) The introduction, spread, or the increased risk of invasion of invasive plant or animal species on the project site, into new or disturbed areas, or areas adjacent to the project site caused by the site work is prohibited (see Appendix E, Paragraph 6).
(b) Unless otherwise directed by the Corps, all applications for Category 2 inland projects and Category 2 coastal fill projects proposing fill in Corps jurisdiction shall include an Invasive Species Control Plan (ISCP) (see Appendix E, Paragraph 6).

30. Cranberry Development Projects. For cranberry development projects authorized under the GP, the following conditions apply:
(a) If a cranberry bog is abandoned for any reason, the area must be allowed to revert to natural wetlands unless an Individual Permit is obtained from the Corps allowing the discharge of fill for an alternate use.

---

[1] The Corps VP Management Area, which includes the VP and a750' radius from the VP's edge, is defined at Appendix A, Endnote 5.
[2] Appendix E, 10(a)-(d) provides links to the state's Significant Wildlife Habitat regulations and references that provide impact minimization measures to reference when designing projects.
[3] The no disturbance requirement in the VP envelope [see (b)(i)(1)], and (b)(i)(2), do not apply to temporary impacts associated with construction mats in previously disturbed areas of existing utility project (e.g., transmission lines, gas pipelines) or linear transportation project (e.g., roads, highways, railways, trails, airport runways and taxiways) right-of-ways provided there is a Vegetation Management Plan that avoids, minimizes and mitigates impacts to aquatic resources.

(b) No stream diversion shall be allowed under Category 1 of this GP.
(c) No impoundments of intermittent or perennial streams shall be allowed under Category 1 and an application to the Corps is required for at least Category 2 review.
(d) The project shall be designed and constructed to not cause flood damage on adjacent properties.

31. Inspections. The permittee shall allow the Corps to make periodic inspections at any time deemed necessary in order to ensure that the work is being or has been performed in accordance with the terms and conditions of this GP. The Corps may also require post-construction engineering drawings for completed work or post-dredging survey drawings for any dredging work.
To facilitate these inspections, the permittee shall complete and return to the Corps:

- For Category 1 projects, the Category 1 Notification Form (Appendix B).
- For Category 2 projects, the 1) Work-Start Notification Form and 2) Compliance Certification Form whenever either is provided with a Category 2 authorization letter.

32. Maintenance.
(a) The permittee shall maintain the work authorized herein in good condition and in conformance with the terms and general conditions of this permit.
(b) This does not include maintenance of dredging projects. Each maintenance dredging event exceeding the Category 1 thresholds (see Appendix A, Page 6) requires a new written Corps authorization unless an unexpired, written Corps authorization specifies that the permittee may "dredge and maintain" an area for a particular time period. Category 1 or 2 maintenance dredging includes only those areas and depths previously authorized and dredged.
(c) Some maintenance activities may not be subject to regulation under Section 404 in accordance with 33 CFR 323.4(a)(2) (see Appendix A, Endnote 7).

33. Property Rights. This PGP does not convey any property rights, either in real estate or material, or any exclusive privileges, nor does it authorize any injury to property or invasion of rights or any infringement of Federal, State, or local laws or regulations.

34. Transfer of GP Verifications. When the structures or work authorized by this GP are still in existence at the time the property is transferred, the terms and conditions of this GP, including any special conditions, will continue to be binding on the entity or individual who received the GP verification, as well as the new owner(s) of the property. The permittee may transfer responsibilities and obligations under the GP verification to the new owner by submitting a letter to the Corps (see Appendix D for address) to validate the transfer. A copy of the GP verification must be attached to the letter and the letter must contain the following statement and signature: "When the structures or work authorized by this GP are still in existence at the time the property is transferred, the terms and conditions of this GP, including any special conditions, will continue to be binding on the new owner(s) of the property. To validate the transfer of this GP and the associated liabilities associated with compliance with its terms and conditions, have the transferee sign and date below."

35. Modification, Suspension, and Revocation. This GP or any work authorized under Category 1 or 2 may be either modified, suspended, or revoked, in whole or in part, pursuant to the policies and procedures of 33 CFR 325.7. Any such action shall not be the basis for any claim for damages against the United States.

36. Restoration Directive. The permittee, upon receipt of a notice of revocation of authorization under this GP, shall restore the wetland or waterway to its former condition without expense to the United States and as directed by the Secretary of the Army or his authorized representative. If the permittee fails

to comply with such a directive, the Secretary or his designee may restore the wetland or waterway to its former condition, by contract or otherwise, and recover the cost from the permittee.

37. Special Conditions. The Corps may independently, or at the request of the Federal resource agencies, impose other special conditions on a project authorized pursuant to this GP that are determined necessary to minimize adverse navigational and/or environmental effects or based on any other factor of the public interest. Failure to comply with all conditions of the authorization, including special conditions, constitutes a permit violation and may subject the permittee to criminal, civil, or administrative penalties and/or an ordered restoration.

38. False or Incomplete Information. If the Corps makes a determination regarding the eligibility of a project under this GP and subsequently discovers that it has relied on false, incomplete, or inaccurate information provided by the permittee, the GP authorization shall not be valid and the U.S. government may institute appropriate legal proceedings.

39. Abandonment. If the permittee decides to abandon the activity authorized under this GP, unless such abandonment is merely the transfer of property to a third party, he/she may be required to restore the area to the satisfaction of the Corps.

40. Enforcement Cases. This GP does not apply to any existing or proposed activity in Corps jurisdiction associated with an on-going Corps or EPA enforcement action, until such time as the enforcement action is resolved or the Corps and/or EPA as appropriate determines that the activity may proceed independently without compromising the enforcement action.

41. Duration of Authorization. This GP expires on October 11, 2015. Activities authorized under this GP that have commenced (i.e., are under construction) or are under contract to commence before this GP expires will have until October 11, 2016 to complete the activity under the terms and conditions of the current GP.

42. Previously Authorized Activities.
(a) Projects that have received authorization (Category 1 or 2) from the Corps and that were completed under the previous PGPs, nationwide permits, regional general permits or letters of permission, shall remain authorized.
(b) Activities authorized pursuant to 33 CFR Part 330.3 ("Activities occurring before certain dates") are not affected by this GP.
(c) Any work not commenced nor completed that was authorized in a written letter from the Corps under the PGP in effect between October 11, 2005 and October 11, 2010 remains authorized subject to the terms and general conditions of this GP along with any special conditions in the authorizing written letter.

43. NEPA Compliance. The Maine PGP was authorized in full compliance with Council for Environmental Quality ("CEQ") NEPA regulations. The Corps has determined that individual permit actions taken under the terms and conditions of the PGP are not a major federal action significantly affecting the quality of the human environment.

10/12/10

District Engineer Date

APPENDIX A: DEFINITION OF CATEGORIES

A. INLAND WATERS AND WETLANDS	**Inland Waters and Wetlands:** Waters that are regulated under Section 404 of the Clean Water Act, including rivers, streams, lakes, ponds and wetlands, and excluding Section 10 Navigable Waters of the U.S. The jurisdictional limits are the ordinary high water (OHW) mark in the absence of adjacent wetlands, beyond the OHW mark to the limit of adjacent wetlands when adjacent wetlands are present, and the wetland limit when only wetlands are present. For the purposes of this GP, fill placed in the area between the mean high water (MHW) and the high tide line (HTL), and in the bordering and contiguous wetlands[1] to tidal waters are reviewed in the Navigable Waters section. (See II. Navigable Waters on page 4 below.)	
	Projects not meeting Category 1 require an application for review as a Category 2 or Individual Permit project. All Category 1 and 2 projects must comply with all of this GP's applicable terms (Pages 1 – 4) and general conditions (Pages 5–18).	
ACTIVITY	**CATEGORY 1**	**CATEGORY 2**
(a) NEW FILL/ EXCAVATION DISCHARGES (You must reference (b) – (e) below for other thresholds that may be relevant to your project.)	**1.** <15,000 square feet (SF) (in LURC or DEP territories) of inland waterway and/or wetland fill and associated secondary impacts[2] (e.g., areas drained, flooded, fragmented, mechanically cleared or excavated). Fill area includes all temporary and permanent fill, and regulated discharges associated with excavation. Construction mats are considered as fill. [See General Condition (GC) 18(g).] <u>Provided:</u> • Historic fill + proposed impact area <15,000 SF and subdivision fill complies with GC 5, Single and Complete Projects. • No work in special aquatic sites (SAS)[4] other than wetlands. **2.** Construction mats[4] of any area necessary to conduct activities that were previously authorized, authorized under Category 1, or not subject to regulation (see Endnote 7). Authorized construction mats must be in place for <3 months, removed immediately upon work completion, and the wetlands must be restored (see GC 19). **3.** For work in Vernal Pool (VP) Management Areas (includes VPs)[5]: • See GC 2 and Appendix C for VP delineation requirements. • See GC 28 to determine if work qualifies for Category 1 or 2. • See Appendix E, Page 3 for VP documents providing mitigation guidance.	**1.** ≥15,000 square feet (SF) (in LURC or DEP territories) to <3 acres of inland waterway and/or wetland fill and associated secondary impacts (e.g., areas drained, flooded, fragmented, or excavated). Fill area includes all temporary and permanent fill, and regulated discharges associated with excavation. Mechanical clearing without grubbing or other soil disturbance >3 acres as a secondary impact may still be eligible for Category 2 at the discretion of the Corps. **2.** Specific activities with impacts of any area ≥15,000 SF required to affect the containment, stabilization, or removal of hazardous or toxic waste materials that are performed, ordered, or sponsored by a government agency with established legal or regulatory authority. Wetlands must be restored in place. **3.** Temporary structures, work, and discharges (including construction mats[4]) ≥15,000 SF necessary for construction activities or access fills or dewatering of construction sites, provided that the associated primary activity is authorized by the Corps, authorized under Category 1, or not subject to Corps regulation. GCs 16 -19 are particularly relevant. See GC 2 and Appendix C for wetland delineation requirements.

ACTIVITY	CATEGORY 1	CATEGORY 2
(b) BANK STABILIZATION PROJECTS	**1.** Inland bank stabilization <500 FT long and <1 CY of fill per linear foot below OHW, provided: • ≤1 cubic yard of fill per linear foot placed along the bank waterward of ordinary high water. • Work complies with the GCs (GC 20 in particular), including: o No structures angled steeper than 1H:1V allowed. Only rough-faced stone or fiber roll revetments allowed. o No in-stream work involving fill or excavation in flowing waters (see GC 22(h)). • In-stream work limited to Jul 15 - Oct 1 [see GC 22 (l)]. • No work in vernal pools[5] or SAS[3]. • GC 10 Endangered Species and GC 11 Essential Fish Habitat are particularly relevant.	**1.** Inland bank stabilization ≥500 FT long and/or ≥1 CY of fill per linear foot, or any amount with fill in wetlands.
(c) RIVER/ STREAM/ BROOK WORK & CROSSINGS *and* WETLAND CROSSINGS	**1.** River, stream and brook work and crossings: • Must comply with GC 22 in particular, including: o No slip lining [see GC 22 (g)]. o No in-stream work involving fill or excavation in flowing waters [see GC 22(h)]. o In-stream work limited to Jul 15 - Oct 1 [see GC 22 (l)]. • No work in riffles and pools[3]. • No stream relocations. • No dams or dikes[6]. • Work in areas designated as Atlantic salmon critical habitat or occupied by listed Atlantic salmon, or any other area occupied by a listed species is not eligible for Category 1 (see GC 10). • No work in EFH streams except for the activities stated in GC 11. **2.** Wetland crossings must comply with the particularly relevant GC 23.	**1.** Work not qualifying for Category 1.

ACTIVITY	CATEGORY 1	CATEGORY 2
(d) REPAIR, REPLACEMENT, & MAINTENANCE OF AUTHORIZED FILLS	**1.** Repair or maintenance of existing, currently serviceable, authorized fills with no expansion or change in use: • Conditions of the original authorization apply • Minor deviations in fill design allowed.[7] • The repair, rehabilitation, or replacement of those structures or fills destroyed or damaged by storms, floods, fire or other discrete events is authorized, provided the repair, rehabilitation, or replacement is commenced, or is under contract to commence, within two years of the date of their destruction or damage.	**2.** Replacement of non-serviceable fills, or repair/maintenance of serviceable fill, with expansion <3 acres, or with a change in use.
(e) MISCELL-ANEOUS	**1.** Activities required for the containment and cleanup of oil and hazardous substances that are subject to the National Oil and Hazardous Substances Pollution Contingency Plan (40 CFR 300) provided that the work is done in accordance with the Spill Control and Countermeasure Plan required by 40 CFR 112.3 and any existing state contingency plan and provided that the Regional Response Team (if one exists in the area) concurs with the proposed containment and cleanup action. SAS[3] must typically be restored in place at the same elevation. **2.** Scientific measurement devices whose purpose is to measure and record scientific data, such as staff gages, water recording devices, water quality testing and improvement devices, and similar structures. This excludes any biological sampling devices. Structures may not restrict movement of aquatic organisms. **3.** Survey activities, such as core sampling, seismic exploratory operations, plugging of seismic shot holes and other exploratory-type bore holes, exploratory trenching, soil surveys, sampling, and historic resources surveys (but not recovery). Exploratory trenches must be restored in accordance with GC 19. The construction of temporary pads is authorized provided the discharge doesn't exceed 25 CY. This doesn't authorize permanent structures or the drilling and the discharge of excavated material from test wells for oil and gas exploration (the plugging of such wells is authorized). **4.** Any work not commenced nor completed that was authorized in a written letter from the Corps under the PGP in effect between October 11, 2005 and October 11, 2010. The terms and general conditions of this GP apply along with any special conditions in the written authorization.	**1.** Aquatic habitat restoration, establishment, and enhancement of wetlands and riparian areas and the restoration and enhancement of streams and other open waters with impacts of any area ≥15,000 SF, provided those activities result in net increase in overall aquatic resource functions and services.[8] **2.** Projects where an EIS is required by the Corps are not eligible for Category 2.

II. NAVIGABLE WATERS	**Navigable Waters of the United States**: Waters that are subject to the ebb and flow of the tide and/or the tidal and non-tidal portions of the Federally designated navigable waters (the Penobscot River, Kennebec River, and Lake Umbagog) (Section 10 Rivers and Harbors Act of 1899). The jurisdictional limits are the mean high water (MHW) line in tidal waters and the ordinary high water (OHW) mark in non-tidal portions of the federally designated navigable rivers. For the purposes of this GP, fill placed in the area between the mean high water (MHW) and the high tide line (HTL), and in the bordering and contiguous wetlands[1] to tidal waters are also reviewed in this Navigable Waters section.	
	Projects not meeting Category 1 require an application for review as a Category 2 or Individual Permit project. All Category 1 and 2 projects must comply with all of this GP's applicable terms (Pages 1 - 4) and general conditions (Pages 5 - 18).	
ACTIVITY	**CATEGORY 1**	**CATEGORY 2**
(a) **FILL**	**1.** Discharges of dredged or fill material incidental to the construction of bridges across navigable waters of the U.S., including cofferdams, abutments, foundation seals, piers, and temporary construction and access fills provided the U.S. Coast Guard authorizes such discharges as part of the bridge permit or appropriate approval. Causeways and approach fills are not included in this category and require Category 2 or Individual Permit authorization. **2.** Bank stabilization projects <200 linear feet: • ≤1 cubic yard of fill per linear foot placed along the bank waterward of high tide line. No fill or equipment will occur in SAS[3]. • Work conducted in the intertidal zone must be conducted in-the-dry during low water, or between Nov. 8 – Apr. 9. • No structures angled steeper than 1H:1V and only rough-faced stone or fiber roll revetments allowed. • No driving of piles or sheeting. **3.** For 1 and 2 above: • Project proponents must contact the USFWS for work on coastal beaches to ensure no impacts to piping plovers, roseate terns or their habitat [see GC 10(b)ii].	**1.** <1 acre temporary or permanent fill, excavation and/or secondary impacts (e.g., areas drained, flooded, fragmented or mechanically cleared). Fill area includes all temporary and permanent waterway fills, provided: • Temporary or permanent fill in eelgrass[14] <1000 SF. • Permanent fill in SAS (excluding eelgrass[14]) <4300 SF.
(b) STREAM WORK & CROSSINGS, *and* WETLAND CROSSINGS	**1.** No new fill for crossings allowed.	**1.** New crossings or replacement crossings that do not fit the (c) Repair and Maintenance activity below.

ACTIVITY	CATEGORY 1	CATEGORY 2
(c) REPAIR AND MAINTENANCE WORK	**1.** Repair, replacement in-kind, or maintenance[7] of existing, currently serviceable[7], authorized structures or fills: • Conditions of the original authorization apply. • No substantial expansion or change in use. • Must be rebuilt in same footprint, however minor deviations in structure design allowed[7]. • The repair, rehabilitation, or replacement of those structures or fills destroyed or damaged by storms, floods, fire or other discrete events is authorized, provided the repair, rehabilitation, or replacement is commenced, or is under contract to commence, within two years of the date of their destruction or damage. Minor deviations for work involving piles shall adhere to one of the 4 methods in a - d below: **a.** Piles installed in-the-dry during low water or in-water between Nov. 8th - Apr. 9th, or **b.** Must be drilled and pinned to ledge, or **c.** Vibratory hammers used to install any size and quantity of wood, concrete or steel piles, or **d.** Impact hammers limited to one hammer and <50 piles installed/day with the following: wood piles of any size, concrete piles ≤18-inches diameter, steel piles <12-inches diameter if the hammer is ≤3000 lbs and a wood cushion is used between the hammer and steel pile, and • For b – d above: o In-water noise levels shall not exceed >187dB SEL re 1µPa or 206dB peak re 1µPa at a distance >10m from the pile being installed~~.~~, and o In-water noise levels >155dB peak re 1µPa shall not exceed 12 consecutive hours on any given day and a 12 hour recovery period (i.e., in-water noise below 155dB peak re 1µPa) must be provided between work days. • For a – d above: o Work is not eligible for Category 1 if conducted in tidal portions of the Penobscot river upstream of a line extending from Turner point in Castine to Moose Point (formerly squaw point) on Cape Jellison in Stockton Springs or in tidal portions of the Kennebec or Androscoggin Rivers upstream of a line extending from Doubling point in Arrowsic to Hospital Point in West Bath.	**1.** Replacement of non-serviceable structures and fills or repair/maintenance of serviceable structures or fills, with fill, replacement or expansion <1 acre, or with a change in use.

ACTIVITY	CATEGORY 1	CATEGORY 2
(d) DREDGING AND ASSOCIATED DISPOSAL	**1.** Maintenance dredging[10] for navigational purposes <1,000 CY with upland disposal. Includes return water from upland contained disposal area, provided: • Proper siltation controls are used. • Dredging & disposal operation limited to Nov. 8 – Apr. 9. • No impact to SAS[3]. • No dredging in intertidal areas. • No dredging in areas considered occupied by listed Atlantic salmon [see GC 10(b)(ii)]. • For dredging in waters outside of Atlantic salmon critical habitat, applicants must contact NMFS (Appendix D) to ensure no impacts to listed species such as shortnose sturgeon. • Project proponents must contact the USFWS for work on coastal beaches to ensure no impacts to piping plovers, roseate terns or their habitat [see GC 10(c)].	**1.** Maintenance dredging[10] ≥1,000 CY, new dredging <25,000 CY, or projects not meeting Category 1. Includes return water from upland contained disposal areas. Disposal includes: • Upland. • Beach nourishment (above mean high water) of any area provided dredging's primary purpose is navigation or sand is from an upland source. • Open water & confined aquatic disposal, if Corps finds the material suitable. **2.** Beach nourishment associated with dredging when the primary purpose is not navigation requires at least a Category 2 review. **3.** Maintenance or new dredging[10] and/or disposal in or affecting a SAS[3] requires an Individual Permit. See II(a) above for dredge disposal in wetlands or waters.
(e) MOORINGS	**1.** Private, non-commercial, non-rental, single-boat moorings, provided: • Authorized by the local harbormaster/town. • Not associated with any boating facility.[11] • Boat or mooring not located in a Federal Navigation Project[12] other than a Federal Anchorage[12]. Moorings in Federal Anchorage not associated with a boating facility[11] and are not for rent. • No interference with navigation. • No new moorings located in SAS[3]. Prior to installation of moorings, a site-specific eelgrass survey should be conducted to document that eelgrass is not present. • When existing, authorized moorings in SAS[3] are going to be replaced, they shall be replaced with elastic mooring systems that prevent mooring chains from resting or dragging on the bottom substrate at all tides and helical anchors, or equivalent SAS protection systems where practicable. **2.** Minor relocation of previously authorized moorings and moored floats, provided: • Authorized by the local harbormaster/town. • Not located in SAS[3] • No interference with navigation. • Cannot be relocated into a Federal Navigation Project[12] other than a Federal Anchorage[12]	**1.** Moorings associated with a boating facility[11]. An eelgrass[14] survey may be required. **2.** Moorings that don't meet the terms in Category 1 and don't require an Individual Permit. This includes private moorings with no harbormaster or means of local approval. **3.** Moorings located such that they, and/or vessels docked or moored at them, are within the buffer zone of the horizontal limits[13] of a Federal Channel[12]. (See Appendix F.) The buffer zone is equal to 3 times the authorized depth of that channel. **4.** An IP is required for moorings within the horizontal limits[11], or with moored vessels that extend, into the horizontal limits of a Federal Navigation Project[12], except those in Federal Anchorages[12]. For 1-4 above, siting of new individual moorings in SAS[3], including eelgrass[14], should be avoided to the maximum extent practicable. If SAS[3] cannot be avoided, plans should show elastic mooring systems that prevent mooring chains from resting or dragging on the bottom substrate at all tides and helical anchors, or equivalent SAS protection systems, where practicable.

ACTIVITY	CATEGORY 1	CATEGORY 2
(f) STRUCTURES AND FLOATS	**1.** Reconfiguration of existing, authorized structures or floats. Provided: **a**. Piles shall adhere to one of the 4 methods in (i) –(iv) below: **i.** Piles installed in-the-dry during low water or in-water between Nov. 8th - Apr. 9th, or **ii.** Must be drilled and pinned to ledge, or **iii.** Vibratory hammers used to install any size and quantity of wood, concrete or steel piles, or **iv.** Impact hammers limited to one hammer and <50 piles installed/day with the following: wood piles of any size, concrete piles ≤18-inches diameter, steel piles <12-inches diameter if the hammer is ≤3000 lbs and a wood cushion is used between the hammer and steel pile. **b**. For (ii) – (iv) above: **i.** In-water noise levels shall not exceed >187dB SEL re 1µPa or 206dB peak re 1µPa at a distance >10m from the pile being installed~~.~~, and **ii.** In-water noise levels >155dB peak re 1µPa shall not exceed 12 consecutive hours on any given day and a 12 hour recovery period (i.e., in-water noise below 155dB peak re 1µPa) must be provided between work days. **c.** For (i) –(iv) above: **i.** Work is not eligible for Category 1 if conducted in tidal portions of the Penobscot river upstream of a line extending from Turner point in Castine to Moose Point (formerly squaw point) on Cape Jellison in Stockton Springs or in tidal portions of the Kennebec or Androscoggin Rivers upstream of a line extending from Doubling point in Arrowsic to Hospital Point in West Bath.	**1.** Private structures or floats, including floatways/skidways, built to access waterway (seasonal and permanent) **2.** Expansions to existing boating facilities[11]. For 1 & 2 above, compliance with the following design standards is not required but recommended: • Pile-supported structures <400 SF, with attached floats totaling ≤200 SF. • Bottom anchored floats ≤200 SF. • Structures are ≤4' wide and have at least a 1:1 height:width ratio[11]. • Floats supported a minimum of 18" above the substrate during all tides. • Structures & floats not located within 25' of any eelgrass[8]. • Moored vessels not positioned over SAS[4]. • No structure located within 25' of the riparian property boundary without written approval from the abutter(s). • No structure extends across >25% of the waterway width at mean low water. • Not located within the buffer zone of the horizontal limits[13] of a Corps Federal Navigation Project (FNP) (App. F). The buffer zone is equal to three times the authorized depth of that FNP. **3.** An Individual Permit is required for structures or floats, including floatways/skidways, located such that they and/or vessels docked or moored at them are within the horizontal limits[13] of a Corps Federal Navigation Project[12] (see App. F). **4.** An Individual Permit is required for structures & floats associated with a new or previously unauthorized boating facility[11].

ACTIVITY	CATEGORY 1	CATEGORY 2
(g) MISCELL-ANEOUS	**1.** Temporary buoys, markers, floats, etc. for recreational use during specific events, provided they are removed within 30 days after use is discontinued. **2.** The placement of aids to navigation and regulatory markers which are approved by and installed in accordance with the requirements of the U.S. Coast Guard. (See 33 CFR 66, Chapter I, subchapter C)." **3.** Activities required for the containment and cleanup of oil and hazardous substances that are subject to the National Oil and Hazardous Substances Pollution Contingency Plan (40 CFR 300) provided that the work is done in accordance with the Spill Control and Countermeasure Plan required by 40 CFR 112.3 and any existing state contingency plan and provided that the Regional Response Team (if one exists in the area) concurs with the proposed containment and cleanup action. SAS[3] must typically be restored in place at the same elevation. **4.** Fish and wildlife harvesting, enhancement, and attraction devices and activities such as pound nets, crab traps, crab dredging, eel pots, lobster traps, and clam and oyster digging, and small fish attraction devices such as open water fish concentrators (sea kites, etc.). This does not authorize artificial reefs or impoundments and semi-impoundments of waters of the U.S. for the culture or holding of motile species such as lobster, or the use of covered oyster trays or clam racks. No activity that results in a hazard to navigation. Note: A Category 1 Notification Form is not required for these devices and activities. **5.** Scientific measurement devices whose purpose is to measure and record scientific data, such as staff gages, water recording devices, water quality testing and improvement devices, and similar structures. Structures may not restrict movement of aquatic organisms. No activity results in a hazard to navigation. **6.** Survey activities such as exploratory drilling, surveying and sampling activities, excluding any biological sampling devices. Does not include oil and gas exploration and fill for roads or construction pads. No activity results in a hazard to navigation. Applicants must contact NMFS to ensure no impacts to listed species.	**1.** Structures or work in or affecting tidal or navigable waters, that are not defined under any of the previous headings listed above. Includes, but is not limited to, utility lines, aerial transmission lines, pipelines, outfalls, boat ramps, floatways/skidways, bridges, tunnels and horizontal directional drilling activities seaward of the mean high water line. **2.** Shellfish/finfish (other than Atlantic salmon), or other aquaculture facilities with no more than minimal individual and cumulative impacts to environmental resources or navigation. –Aquaculture guidelines are provided at: www.maine.gov/dmr/aquaculture/index.htm. **3.** Specific activities with impacts of any area required to affect the containment, stabilization, or removal of hazardous or toxic waste materials that are performed, ordered, or sponsored by a government agency with established legal or regulatory authority. Wetlands must typically be restored in place at the same elevation to qualify. **4.** Aquatic habitat restoration, establishment and enhancement provided those activities are proactive and result in net increases in aquatic resource functions and services.[8] **5.** Projects where an EIS is required by the Corps are not eligible for Category 2.

ACTIVITY	CATEGORY 1	CATEGORY 2
(g) MISCELL-ANEOUS (continued)	**7.** Shellfish seeding (brushing the flats[9]) projects. **8.** Marine railway work not eligible for maintenance[7] (i.e. not currently serviceable[7] or in non-compliance) may be replaced "in-kind" with minor deviations[7] provided: • Work is in the intertidal zone • No fill expansion below high tide line. • Work conducted in-the-dry during low water or in-water between Nov. 8 – Apr. 9. **9.** Test plots <100 SF for the planting of wetland species native to the area. No grading, no structures, no plant growing devices and no interference with navigation, which require at least Category 2 review. **10.** Any work not commenced nor completed that was authorized in a written letter from the Corps under the PGP in effect between October 11, 2005 and October 11, 2010. The terms and general conditions of this GP apply along with any special conditions in the written authorization	

Endnotes/Definitions

[1] **Bordering and Contiguous Wetlands:** A bordering wetland is immediately next to its adjacent waterbody and may lie at, or below, the ordinary high water mark (mean high water in navigable waters) of that waterbody and is directly influenced by its hydrologic regime. Contiguous wetlands extend landward from their adjacent waterbody to a point where a natural or manmade discontinuity exists. Contiguous wetlands include bordering wetlands as well as wetlands that are situated immediately above the ordinary highwater mark and above the normal hydrologic influence of their adjacent waterbody. Note, with respect to the federally designated navigable rivers, the wetlands bordering and contiguous to the tidally influenced portions of those rivers are reviewed under "II. Navigable Waters."

[2] **Direct, Secondary, and Cumulative Impacts/Effects:**

Direct Impacts: The immediate loss of aquatic ecosystem within the footprint of the fill.

Secondary Impacts: These are effects on an aquatic ecosystem that are associated with a discharge of dredged or fill materials, but do not result from the actual placement of the dredged or fill material. Information about secondary effects on aquatic ecosystems shall be considered prior to the time final section 404 action is taken by permitting authorities. Some examples of secondary effects on an aquatic ecosystem are a) fluctuating water levels in all impoundment and downstream associated with the operation of a dam, b) septic tank leaching and surface runoff from residential or commercial developments on fill, and c) leachate and runoff from a sanitary landfill located in waters of the U.S. Put another way, secondary effects are those impacts outside the footprint of the fill that arise from and are associated with the discharge of dredged or fill material, including the operation of an activity or facility associated with the discharge. Examples may include habitat fragmentation; interruption of travel corridors for wildlife (for example, for amphibians that migrate to and from seasonal or vernal pools used as breeding habitat); hydrologic regime changes; and impacts from operation and maintenance activities for constructed facilities; such as noise/lighting, storm water runoff, and road kill of wetland dependent wildlife. Using the directions contained in the guidelines, we consider the circumstances of a proposed discharge and the project of which it is a part to evaluate the scope, extent, severity, and permanence of direct, secondary, and cumulative adverse effects upon the aquatic ecosystem.

Cumulative Impacts: The extent of past, present, and foreseeable developments in the area may be an important consideration in evaluating the significance of a particular project's impacts. Although the impacts associated with a particular discharge may be minor, the cumulative effect of numerous similar discharges can result in a large impact. Cumulative impacts should be estimated only to the extent that they are reasonable and practical.

[3] **Special Aquatic Sites:** Includes wetlands and saltmarsh, mudflats, riffles and pools, and vegetated shallows (predominantly comprised of eelgrass in Maine).

[4] **Construction Mats:** Constructions, swamp and timber mats (herein referred to as "construction mats") are generic terms used to describe structures that distribute equipment weight to prevent wetland damage while facilitating passage and providing work platforms for workers and equipment. They are comprised of sheets or mats made from a variety of materials in various sizes. A timber mat consists of large timbers bolted or cabled together. Corduroy roads, which are not considered to be construction mats, are cut trees and/or saplings with the crowns and branches removed, and the trunks lined up next to one another. Corduroy roads are typically installed as permanent structures. Like construction mats, they are considered as fill whether they're installed temporarily or permanently.

[5] **Vernal Pools:** A vernal pool, also referred to as a seasonal forest pool, is a temporary to semi-permanent body of water occurring in a shallow depression that typically fills during the spring or fall and may dry during the summer. Vernal pools have no permanent inlet or outlet and no viable populations of predatory fish. A vernal pool may provide the primary breeding habitat for wood frogs (*Rana sylvatica*), spotted salamanders (*Ambystoma maculatum*), blue-spotted salamanders (*Ambystoma laterale*), and fairy shrimp (*Eubranchipus* sp.), as well as valuable habitat for other plants and wildlife, including several rare, threatened, and endangered species. A vernal pool intentionally created for the purposes of compensatory mitigation is included in this definition. For the purposes of this GP, the presence of any of the following species in any life stage in any abundance level/quantity would designate the waterbody as a vernal pool: fairy shrimp, blue spotted salamanders, spotted salamanders or wood frogs. The Corps may determine during a Category 2 review that a waterbody should not be regulated as a VP based on available evidence. For the purposes of this GP*, the VP Management Areas are the: Vernal Pool Depression (includes the vernal pool depression up to the spring or fall high water mark, and includes any vegetation growing within the depression), Vernal Pool Envelope (area within 100 FT of the VP Depression's edge) and Critical Terrestrial Habitat (area within 100-750 FT of the Vernal Pool Depression's edge). [*Note: Critical Terrestrial Habitat is defined as 100 -750 FT on page 243 of the document "Science and Conservation of Vernal Pools in Northeastern North America," Calhoun and deMaynadier, 2008, which is referenced in Appendix E, page 3, Paragraph 10(b).

[6] **Water Diversions:** Water diversions are activities such as bypass pumping or water withdrawals. Temporary flume pipes, culverts or cofferdams where normal flows are maintained within the stream boundary's confines aren't water diversions. "Normal flows" are defined as no change in flow from pre-project conditions.

[7] **Maintenance: a)** In accordance with 33 CFR 323.4(a)(2), any discharge of dredged or fill material that may result from any of the following activities is not prohibited by or otherwise subject to regulation under Section 404 of the CWA: "Maintenance, including emergency reconstruction of recently damaged parts, of currently serviceable structures such as dikes, dams, levees, groins, riprap, breakwaters, causeways, bridge abutments or approaches, and transportation structures. Maintenance does not include any modification that changes the character, scope, or size of the original fill design." Otherwise, the following work is regulated and subject to the Category 1 or 2 thresholds in Appendix A above: The repair, rehabilitation, or replacement of any previously authorized, currently serviceable structure or fill, or of any currently serviceable structure or fill authorized by 33 CFR 330.3 – "Activities occurring before certain dates," provided that the structure or fill is not to be put to uses differing from those uses specified or contemplated for it in the original permit or the most recently authorized modification. **b)** Minor deviations in the structure's configuration or filled area, including those due to changes in materials, construction techniques, or current construction codes or safety standards that are necessary to make repair, rehabilitation, or replacement are authorized. **c)** Currently serviceable means useable as is or with some maintenance, but not so degraded as to essentially require reconstruction. **d)** No seaward expansion for bulkheads or any other fill activity is considered Category 1 maintenance. **e)** Only structures or fills that were previously authorized and are in compliance with the terms and condition of the original authorization can be maintained as a non-regulated activity under 33 CFR 323.4(a)(2), or in accordance with the Category 1 or 2 thresholds in Appendix A. **f)** The state's maintenance provisions may differ from the Corps and may require reporting and written authorization from the state. **g)** Contact the Corps to determine whether stream crossing replacements require a written application to the Corps for at least a Category 2 review.

[8] **Aquatic Habitat Restoration, Establishment and Enhancement:** The Corps will decide if a project qualifies and must determine in consultation with federal and state agencies that the net effects are beneficial. The Corps may refer to Nationwide Permit 27 published in the 3/12/07 Federal Register. Activities authorized here may include, but are not limited to: the removal of accumulated sediments; the installation, removal, and maintenance of small water control structures, dikes, and berms; the installation of current deflectors; the enhancement, restoration, or establishment of riffle and pool stream structure; the placement

of in-stream habitat structures; modifications of the stream bed and/or banks to restore or establish stream meanders; the backfilling of artificial channels and drainage ditches; the removal of existing drainage structures; the construction of small nesting islands in inland waters**;** the construction of open water areas; the construction of native shellfish species habitat over unvegetated bottom for the purpose of habitat protection or restoration in tidal waters; shellfish seeding; activities needed to reestablish vegetation, including plowing or discing for seed bed preparation and the planting of appropriate wetland species; mechanized land clearing to remove non-native invasive, exotic, or nuisance vegetation; and other related activities. Only native plant species should be planted at the site.

[9] **Brushing the Flats:** The placement of tree boughs, wooden lath structure, or small-mesh fencing on mudflats to enhance recruitment of soft-shell clams (*Mya arenaria*).

[10] **Maintenance Dredging:** This includes only those areas and depths previously authorized by the Corps and dredged.

[11] **Boating Facilities:** Facilities that provide for a fee, rent, or sell mooring space, such as marinas, yacht clubs, boat clubs, boat yards, town facilities, dockominiums, etc.

[12] **Federal Navigation Projects (FNPs):** FNPs are comprised of Federal Channels and Federal Anchorages. See Appendix F for their location and contact the Corps for more information. "Horizontal Limits" is the outer edge of an FNP. "Buffer Zone" is equal to three times the authorized depth of that channel.

[13] **Horizontal Limits:** The outer edge of a Federal Navigation Project (FNP). See Appendix F and contact the Corps for information on FNP's.

[14] **Eelgrass (Zostera marina):** A type of rooted aquatic vegetation that exists in intertidal and shallow subtidal areas known as vegetated shallows. See www.nero.noaa.gov/hcd/ for eelgrass survey guidance.

[15] **Structures:** The height of structures shall at all points be equal to or exceed the width of the deck. For the purpose of this definition, height shall be measured from the marsh substrate to the bottom of the longitudinal support beam.

Appendix D: Contacts and Tribal Areas of Interest

1. FEDERAL

U.S. Army Corps of Engineers
Maine Project Office
675 Western Avenue #3
Manchester, Maine 04351
(207) 623-8367; (207) 623-8206 (fax)

Federal Endangered Species
U.S. Fish and Wildlife Service
Maine Field Office
17 Godfrey Drive, Suite 2
Orono, Maine 04473
(207) 866-3344; (207) 866-3351 (fax)

Wild and Scenic Rivers
National Park Service
North Atlantic Region
15 State Street
Boston, Massachusetts 02109
(617) 223-5203

Bridge Permits
Commander (obr)
First Coast Guard District
One South Street - Battery Bldg
New York, New York 10004
(212) 668-7021; (212) 668-7967 (fax)

Federal Endangered Species
National Marine Fisheries Service
Maine Field Office
17 Godfrey Drive Suite 1
Orono, ME 04473
(207) 866-7379; (978) 866-7342 (fax)

Federal Endangered Species & EFH
National Marine Fisheries Service
55 Great Republic Drive
Gloucester, Massachusetts 01930
(978) 281-9102; (978) 281-9301 (fax)

2. STATE OF MAINE

Maine Department of Environmental Protection (for State Permits & Water Quality Certifications)
Division of Land Resource Regulation
Bureau of Land and Water Quality
17 State House Station
Augusta, Maine 04333
(207) 287-7688

Southern Maine Regional Office
312 Canco Road
Portland, Maine 04103
(201) 822-6300

Eastern Maine Regional Office
106 Hogan Road
Bangor, Maine 04401
(207) 941-4570

Northern Maine Regional Office
1235 Central Drive - Skyway Park
Presque Isle, Maine 04769
(207) 764-0477

Maine Land Use Regulation Commission (LURC) (www.maine.gov/doc/lurc/offices.html)
22 State House Station
Augusta, Maine 04333-0022
(207) 287-2631; (207) 287-7439 (fax)

Lakeview Drive
P.O. Box 1107
Greenville, Maine 04441
(207) 695-2466; (207) 695-2380 (fax)

106 Hogan Rd, Suite 7
Bangor, Maine 04401
(207) 941-4052; (207) 941-4222 (fax)

45 Radar Road
Ashland, ME 04732-3600
(207) 435-7963; (207) 435-7184 (fax)

191 Main Street
East Millinocket, ME 04430
(207) 746-2244; (207) 746-2243 (fax)

(For CZM Determinations)
State Planning Office
Coastal Program
184 State Street
State House Station 38
Augusta, Maine 04333
(207) 287-1009

(For Aquaculture Leases)
Maine Department of Marine Resources
P.O. Box 8
West Boothbay Harbor, Maine 04575
(207) 633-9500

(For Submerged Lands Leases)
Maine Department of Conservation
Bureau of Parks and Lands
22 State House Station
Augusta, Maine 04333
(207) 287-3061

3. HISTORIC PROPERTIES

Maine Historic Preservation Commission (MHPC)
State House Station 65
Augusta, Maine 04333-0065
(207) 287-2132; (207) 287-2335 (fax)

Houlton Band of Maliseet Indians
Attn: Sharri Venno, Environmental Planner
88 Bell Road
Littleton, Maine 04730
(207) 532-4273, x215; (207) 532-1883 (fax)
envplanner@maliseets.com

Passamaquoddy Tribe of Indians
Pleasant Point Reservation
Attn: Donald Soctomah, THPO
P.O. Box 343
Perry, Maine 04667
(207) 853-2600; (207) 853-6039 (fax)

Aroostook Band of Micmacs
Attn: Victoria Higgins, Chief
7 Northern Road
Presque Isle, Maine 04769
(207) 764-1972; (207) 764-7667 (fax)

Passamaquoddy Tribe of Indians
Indian Township Reservation
Attn: Donald Soctomah, THPO
P.O. Box 301
Princeton, Maine 04668
(207) 796-2301; (207) 796-5256 (fax)

Penobscot Indian Nation
Indian Island Reservation
Attn: Ms. Bonnie Newsom, THPO
12 Wabanaki Way
Indian Island, Maine 04468
(207) 817-7471; (207) 817-7450 (fax)

4. ORGANIZATIONAL WEBSITES:

Army Corps of Engineers, N.E. District	www.nae.usace.army.mil/reg
Army Corps of Engineers, Headquarters	www.usace.army.mil/CECW/Pages/cecwo_reg.aspx
Environmental Protection Agency	www.epa.gov/owow/wetlands
National Marine Fisheries Service	www.nmfs.noaa.gov
U.S. Fish and Wildlife Service	www.fws.gov/mainefieldoffice
National Park Service	www.nps.gov/rivers/index.html
State of Maine	www.maine.gov
Maine Department of Environmental Protection	www.maine.gov/dep
Maine Land Use Regulation Commission	www.maine.gov/doc/lurc
State of Maine -Aquaculture Guidelines	www.maine.gov/dmr/aquaculture/index.htm

Appendix E: Additional References

1. GC 2: Federal Jurisdictional Boundaries.
(a) Corps Wetlands Delineation Manual, regional supplements, and Corps Wetland Delineation Data Sheets: www.nae.usace.army.mil/reg and then "Wetlands and Jurisdictional Limits."
(b) The USFWS publishes the 1988 National List of Plant Species that Occur in Wetlands (www.nwi.fws.gov).
The Natural Resources Conservation Service (NRCS) publishes the current hydric soil definition, criteria and lists: http://soils.usda.gov/use/hydric. For the Field Indicators for Identifying Hydric Soils in N.E., see www.neiwpcc.org/hydricsoils.asp.

2. GC 5:
Single and complete project means the total project proposed or accomplished by one owner/developer or partnership or other association of owners/developers. For example, if construction of a residential development affects several different areas of a headwater or isolated water, or several different headwaters or isolated waters, the cumulative total of all filled areas should be the basis for deciding whether or not the project will be covered by Category 1 or 2.
The ***Independent utility*** test is used to determine what constitutes a single and complete project in the Corps regulatory program. A project is considered to have independent utility if it would be constructed absent the construction of other projects in the project area. Portions of a multi-phase project that depend upon other phases of the project do not have independent utility. Phases of a project that would be constructed even if the other phases were not built can be considered as separate single and complete projects with independent utility.

3. GC 10: Threatened and Endangered Species.
(a) The following NMFS site must be referenced to ensure that listed species or critical habitat are not present in the action area [GC 10(b)] or to provide information on federally-listed species or habitat [GC 10(e)]: www.nero.noaa.gov/prot_res/esp/ListE&Tspec.pdf. Contact the USFWS for information to check for the presence of listed species (see Appendix D for contact information).
(b) The Endangered Species Act Consultation Handbook – Procedures for Conducting Section 7 Consultations and Conferences, defines action area as "all areas to be affected directly or indirectly by the federal action and not merely the immediate area involved in the action. [50 CFR 402.02]."

4. GC 11: Essential Fish Habitat.
As part of the PGP screening process, the Corps may coordinate with NMFS in accordance with the 1996 amendments to the Magnuson-Stevens Fishery Conservation and Management Act to protect and conserve the habitat of marine, estuarine and anadromous finfish, mollusks, and crustaceans. This habitat is termed "Essential Fish Habitat (EFH)", and is broadly defined to include "those waters and substrate necessary to fish for spawning, breeding, feeding, or growth to maturity." There are EFH waters throughout inland and coastal waters in Maine. For additional information, see the EFH regulations 50 CFR 600 at www.nero.noaa.gov/hcd including the "Guide for EFH Descriptions" at www.nero.noaa.gov/hcd/list.htm. Additional information on the location of EFH can be obtained from NMFS (see Appendix D for contact information).

5. GC 16: Avoidance, Minimization and Compensatory Mitigation.
(a) See www.nae.usace.army.mil/reg and then "Mitigation" to view the April 10, 2008 "Final Compensatory Mitigation Rule" (33 CFR 332) and related documents. The Q&A document states: "In order to reduce risk and uncertainty and help ensure that the required compensation is provided, the rule establishes a preference hierarchy for mitigation options. The most preferred option is mitigation

bank credits, which are usually in place before the activity is permitted. In-lieu fee program credits are second in the preference hierarchy, because they may involve larger, more ecologically valuable compensatory mitigation projects as compared to permittee-responsible mitigation. Permittee-responsible mitigation is the third option, with three possible circumstances: (1) conducted under a watershed approach, (2) on-site and in kind, and (3) off-site/out-of-kind.
(b) Compensatory mitigation may take the form of wetland preservation, restoration, enhancement, creation, and/or in lieu fee (ILF) for inclusion into the Natural Resources Mitigation Fund for projects in DEP and LURC territories. Avoidance of wetland impacts will reduce the ILF dollar total for applicants. The ILF compensation program was established to provide applicants with a flexible compensation option over and above traditional permittee responsible compensation projects. See the Maine ILF Agreement at www.nae.usace.army.mil/reg, "Mitigation" and then "Maine," or www.maine.gov/dep/blwq/docstand/nrpa/ILF_and_NRCP/index.htm.

6. GCs 19 and 29: Invasive Species.
(a) Information on what are considered "invasive species" is provided in our "Compensatory Mitigation Guidance" document at www.nae.usace.army.mil/reg under "Mitigation." The "Invasive Species" section has a reference to our "Invasive Species Control Plan (ISCP) Guidance" document, located at www.nae.usace.army.mil/reg under "Invasive Species," which provides information on preparing an ISCP.
(b) The June 2009 "Corps of Engineers Invasive Species Policy" is at www.nae.usace.army.mil/reg under "Invasive Species" and provides policy, goals and objectives.

7. GC 20: Bank Stabilization.
This generally eliminates bodies of water where the reflected wave energy may interfere with or impact on harbors, marinas, or other developed shore areas. A revetment is sloped and is typically employed to absorb the direct impact of waves more effectively than a vertical seawall. It typically has a less adverse effect on the beach in front of it, abutting properties and wildlife. See the Corps Coastal Engineering Manual EM 1110-2-1100 at www.nae.usace.army.mil/reg under "Useful Links and Documents" for design and construction guidance.

8. GC 22: Stream Crossings and Work.
(a) Projects should be designed and constructed to ensure long-term success using the most recent manual located at www.nae.usace.army.mil/reg under "Stream and River Continuity," currently "Stream Simulation: An Ecological Approach to Providing Passage for Aquatic Organisms at Road-Stream Crossings, by the U.S. Forest Service." Section 5.3.3 is of particular importance. Sections 7.5.2.3 Construction Methods and 8.2.11 Stream-Simulation Bed Material Placement both show important steps in the project construction.
(b) For more information on High-Quality Stream Segments and their components see:
- **i.** High-Quality Stream Segments are shown at www.maine.gov/dep/gis/datamaps.
- **ii.** Class A Waters or Class AA Waters:

www.mainelegislature.org/legis/statutes/38/title38sec465.html, and
www.mainelegislature.org/legis/statutes/38/title38sec467.html.
- **iii.** Outstanding river segments www.mainelegislature.org/legis/statutes/38/title38sec480-P.html.

(c) The Massachusetts Dam Removal and the Wetland Regulations guidance may be used to evaluate the positive and negative impacts of culvert replacement, including the loss of upstream wetlands, which may be offset by the overall benefits of the river restoration. See www.nae.usace.army.mil/reg and then "Stream and River Continuity."
(d) The ME DOT's document "Waterway and Wildlife Crossing Policy and Design Guide for Aquatic Organism, Wildlife Habitat, and Hydrologic Connectivity," 3rd Edition, July 2008, may be used to

evaluate impacts to aquatic, wildlife and surface water resources when designing, constructing, repairing and maintaining stream crossings. Note: Adherence to this DOT document does not ensure compliance with this GP. Projects must comply with the requirements of this GP including GC 22 and the Corps General Stream Crossing Standards contained therein.
www.maine.gov/mdot/environmental-office-homepage/fishpassage/3rd%20edition%20-%20merged%20final%20version%207-01-08a1.pdf.
(e) GC 22(f): The Skidder Bridge Fact Sheet at www.nae.usace.army.mil/reg under "Stream and River Continuity" may be a useful temporary span construction method.

9. GC 23: Wetland Crossings. The Maine DEP's crossing standards are at 06-096 DEP, Chapter 305: Permit by Rule, 9) Crossings (utility lines, pipes and cables).
www.maine.gov/dep/blwq/rules/NRPA/2009/305/305_effective_2009.pdf

10. GC 28: Protection of Vernal Pools.
(a) The state's Significant Wildlife Habitat rules (Chapter 335, Section 9(C) "Habitat management standards for significant vernal pool habitat") are located at
www.maine.gov/dep/blwq/docstand/nrpapage.htm#rule under "Rules."
(b) The following documents provide conservation recommendations:
i. Best Development Practices: Conserving pool-breeding amphibians in residential and commercial development in the northeastern U.S., Calhoun and Klemens, 2002. Chapter III, Management Goals and Recommendations, Pages 15 – 26, is particularly relevant. (Available for purchase at www.maineaudubon.org/resource/index.shtml and on Corps website*.)
ii. Science and Conservation of Vernal Pools in Northeastern North America, Calhoun and deMaynadier, 2008. Chapter 12, Conservation Recommendations section, Page 241, is particularly relevant. (Available for purchase via the internet. Chapter 12 is available on Corps website*.)
* www.nae.usace.army.mil/reg under "Vernal Pools."
(c) Cape Cod Curbing: For smaller roads and driveways, the most important design feature to consider is curbing. Granite curbs and some traditional curbing can act as a barrier to amphibian and hatchling turtle movements. Large numbers of salamanders have been intercepted in their migrations by curbs and catch basins. Use of Cape Cod curbs rather than traditional curbing may be one solution. Alternatively, where storm water management systems require more traditional curbing, it may be possible to design in escape ramps on either side of each catch basin. Cape Cod curbing is shown on Page 35 of the document cited in 10.b.i above. Bituminous material is not required; other materials such as granite are acceptable.
(d) The VP Directional Buffer Guidance document is located at www.nae.usace.army.mil/reg under: 1) "State General Permits" and then "Maine," and 2) "Vernal Pools."

11. GC 32: Maintenance. River restoration projects that are designed to accommodate the natural dynamic tendencies of the fluvial system are maintained in accordance with the project's design objectives (Category 1) or the Corps authorization letter (Category 2). These projects are generally designed to support and implement channel assessment and management practices that recognize a stream's natural dynamic tendencies.

Appendix F: Corps Projects in Maine

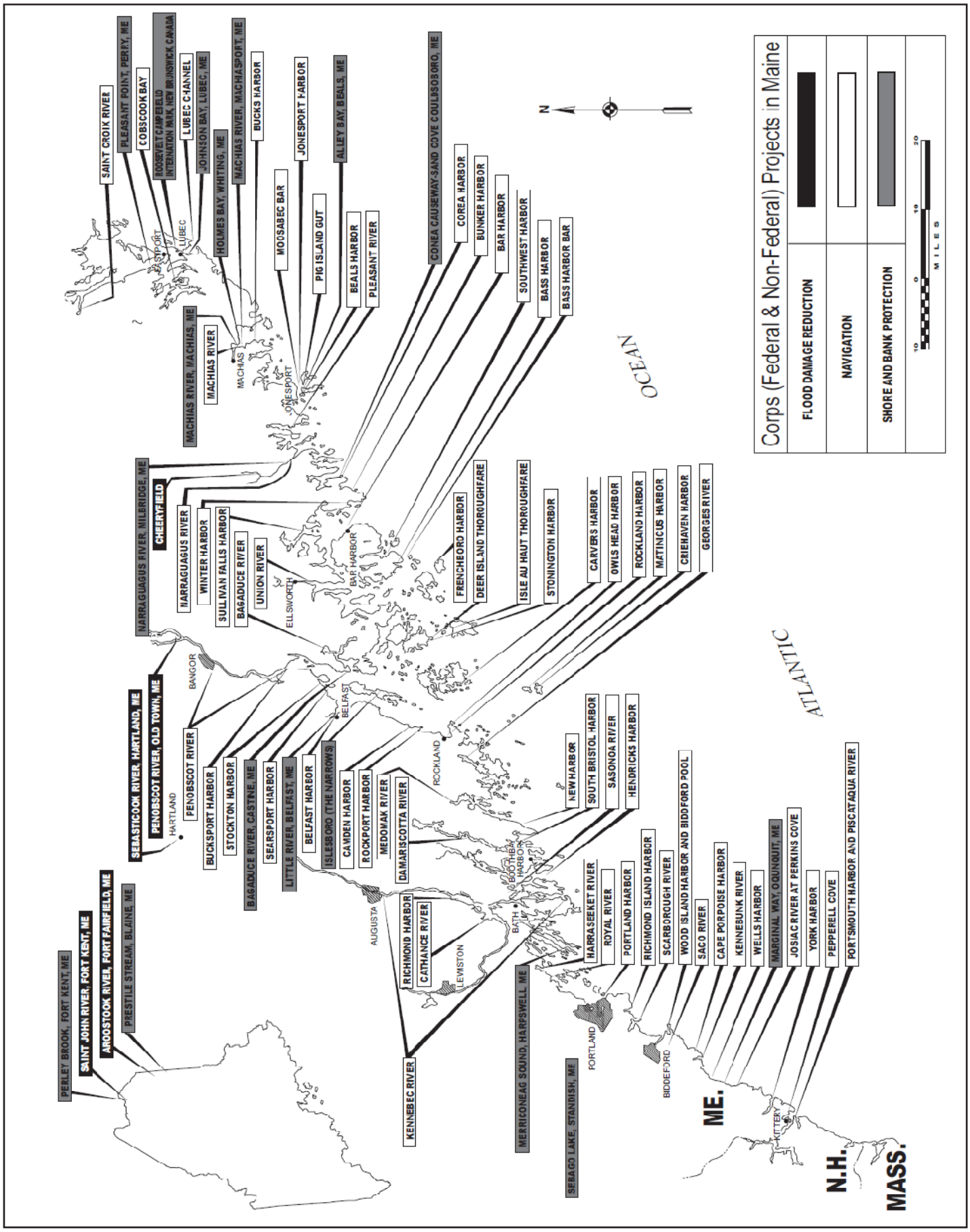

STATE OF MAINE
DEPARTMENT OF ENVIRONMENTAL PROTECTION

PAUL R. LEPAGE
GOVERNOR

PATRICIA W. AHO
COMMISSIONER

September 2014

City of Westbrook
C/o Molly Just
2 York Street
Westbrook, ME 04092

RE: Natural Resources Protection Act Application, Westbrook, DEP #L-21050-L6-C-N

Dear Ms. Just:

Please find enclosed a signed copy of your Department of Environmental Protection land use permit. You will note that the permit includes a description of your project, findings of fact that relate to the approval criteria the Department used in evaluating your project, and conditions that are based on those findings and the particulars of your project. Please take several moments to read your permit carefully, paying particular attention to the conditions of the approval. The Department reviews every application thoroughly and strives to formulate reasonable conditions of approval within the context of the Department's environmental laws. You will also find attached some materials that describe the Department's appeal procedures for your information.

If you have any questions about the permit or thoughts on how the Department processed this application please get in touch with me directly. I can be reached at 207- 822-6300 or at robert.green@maine.gov.

Sincerely,

Robert L. Green, Jr.

Robert L. Green, Jr., Project Manager
Division of Land Resource Regulation
Bureau of Land and Water Quality

pc: File

AUGUSTA
17 STATE HOUSE STATION
AUGUSTA, MAINE 04333-0017
(207) 287-7688 FAX: (207) 287-7826

BANGOR
106 HOGAN ROAD, SUITE 6
BANGOR, MAINE 04401
(207) 941-4570 FAX: (207) 941-4584

PORTLAND
312 CANCO ROAD
PORTLAND, MAINE 04103
(207) 822-6300 FAX: (207) 822-6303

PRESQUE ISLE
1235 CENTRAL DRIVE, SKYWAY PARK
PRESQUE ISLE, MAINE 04769
(207) 764-0477 FAX: (207) 760-3143

web site: www.maine.gov/dep

STATE OF MAINE
DEPARTMENT OF ENVIRONMENTAL PROTECTION
17 STATE HOUSE STATION AUGUSTA, MAINE 04333-0017

DEPARTMENT ORDER

IN THE MATTER OF

CITY OF WESTBROOK	) NATURAL RESOURCES PROTECTION ACT
Westbrook, Cumberland County	) STREAMBANK ALTERATION
RIVERWALK EXTENSION AND	) WATER QUALITY CERTIFICATION
PEDESTRIAN BRIDGE	)
L-21050-L6-C-N (approval)	) FINDINGS OF FACT AND ORDER

Pursuant to the provisions of 38 M.R.S.A. Sections 480-A et seq. and Section 401 of the Federal Water Pollution Control Act, the Department of Environmental Protection has considered the application of the CITY OF WESTBROOK with the supportive data, agency review comments, and other related materials on file and FINDS THE FOLLOWING FACTS:

1. PROJECT DESCRIPTION:

A. History of Project: In Department Order #L-21050-L6-A-N, dated January 22, 2003, the Department approved the construction of a pile-supported, wooden boardwalk along the top of the bank of the southern shore of the Presumpscot River in the downtown area of Westbrook. The 1,075-linear foot boardwalk included approximately 210 linear feet of elevated boardwalk on the west side of the Bridge Street bridge and 865 linear feet on the easterly side. The boardwalk varies in width between eight feet and 28 feet. The boardwalk does not extend out over the river.

On October 9, 2013, the Maine Department of Transportation (MDOT) submitted a Natural Resources Protection Act (NRPA) Permit-By-Rule Notification Form (PBR #57025) for the replacement of the Bridge Street bridge in Westbrook, in accordance with NRPA Rules, Chapter 305, Section 11. MDOT intends to build the new bridge west (upstream) of the existing bridge. The northern approach of the new bridge will be realigned immediately adjacent to its current location. The southern approach will be relocated approximately 150 feet west of its current location. From the realigned southern approach, the new Bridge Street will intersect with Main Street at the location of the existing Bridge Street Spur, approximately 225 feet west of the current intersection. The new bridge will result in the removal of approximately 50 feet of the boardwalk. PBR #57025 was accepted by the Department on October 15, 2013.

B. Summary: The applicant proposes to redevelop the area between the existing Bridge Street location and the new Bridge Street along the southern shore of the Presumpscot River, with new parking and a concrete plaza along the immediate shoreline. On the northern shoreline, the applicant proposes to redevelop the abandoned road with a concrete plaza, similar in design to the southern shoreline. The perimeter of the two plazas will be lined with an ornamental railing. The abutments of the existing bridge will remain in place. The superstructure of the existing bridge will be replaced

with a 10-foot wide pedestrian/bicycle bridge, and on both sides of the river, viewing platforms, approximately 25 feet long, will be cantilevered over the river approximately five feet. Braces for the viewing platforms will be set into the existing abutments.

The applicant also proposes to extend the portion of the boardwalk west of the new Bridge Street bridge. The proposed boardwalk expansion will start at the outer end of the existing boardwalk and extend over the shoreline. The expansion consists of two sections: an approximately 11-foot wide section for approximately 57 feet long and an approximately 8-foot section for approximately 85 feet. The new boardwalk will be supported by two rows of piles driven into the riprap shoreline and above the normal high water line.

The proposed project is shown on a set of plans, the first of which is entitled "Heart of Downtown, Streetscape Improvements," prepared by Stantec Consulting Services, Inc., and dated October 11, 2013.

C. Current Use of the Site: The applicant owns a total of 2.24 acres off Bridge Street and along the banks of the Presumpscot River. The property is developed with the existing boardwalk, concrete plaza, and paved parking areas. In the project area, most of the bank of the Presumpscot River is already stabilized with large rock rip rap. Trees and shrubs are presently growing in the rip rap.

2. EXISTING SCENIC, AESTHETIC, RECREATIONAL OR NAVIGATIONAL USES:

In accordance with Chapter 315, Assessing and Mitigating Impacts to Scenic and Aesthetic Uses, the applicant submitted a copy of the Department's Visual Evaluation Field Survey Checklist as Appendix A to the application along with a description of the property and the proposed project. The applicant also submitted several photographs of the proposed project site, including an aerial photograph of the project site.

The proposed project is located in and adjacent to the Presumpscot River, which is a scenic resource visited by the general public, in part, for the use, observation, enjoyment and appreciation of its natural and cultural visual qualities. The shoreline of this stretch of the Presumpscot River is completely developed. A thin line of trees grows along the shore, but above the river banks are commercial buildings, parking areas, and the existing boardwalk. Landscape of the proposed project will be consistent with, and will not detract from, the existing uses and the scenic quality of this stretch of the shoreline.

The proposed project was evaluated using the Department's Visual Impact Assessment Matrix and was found to have an acceptable potential visual impact rating. Based on the information submitted in the application and the visual impact rating, the Department determined that the location and scale of the proposed activity is compatible with the existing visual quality and landscape characteristics found within the viewshed of the scenic resource in the project area.

The Department did not identify any issues involving existing recreational and navigational uses.

The Department finds that the proposed activity will not unreasonably interfere with existing scenic, aesthetic, recreational or navigational uses of the protected natural resource.

3. SOIL EROSION:

By agreement between the applicant and the MDOT, the proposed project will be constructed by the MDOT. To protect the water quality of the Presumpscot River during and after construction, the MDOT proposes to construct the proposed project in accordance with the latest versions of the *State of Maine Department of Transportation Standard Specifications for Highways and Bridges* and the *Department of Transportation's Best Management Practices for Erosion and Sedimentation Control.*

The Department finds that the activity will not cause unreasonable erosion of soil or sediment nor unreasonably inhibit the natural transfer of soil from the terrestrial to the marine or freshwater environment.

4. HABITAT CONSIDERATIONS:

Department staff reviewed a Geographic Information System (GIS) database that contains information provided by both the Department of Marine Resources and the Department of Inland Fisheries and Wildlife (MDIFW). The GIS database indicates that no Essential or Significant Wildlife Habitats as defined in the NRPA are found along this portion the Presumpscot River, including the project site.

The Maine Department of Inland Fisheries and Wildlife (MDIFW) reviewed the proposed project and stated that minimal impacts to wildlife are anticipated from the proposed project.

The Department finds that the activity will not unreasonably harm any significant wildlife habitat, freshwater wetland plant habitat, threatened or endangered plant habitat, aquatic or adjacent upland habitat, travel corridor, freshwater, estuarine or marine fisheries or other aquatic life.

5. WATER QUALITY CONSIDERATIONS:

The project will disturb soil within 25 feet of the Presumpscot River but will not encroach into the river. The applicant proposes to support the boardwalk on piles driven into the existing rip rap slope. The applicant intends to remove existing pavement and other utilities within 75 feet of the river in order to construct the project. The applicant submitted a detailed erosion control plan as discussed in Finding 3

The applicant proposes to use lumber treated with chromated copper arsenate (CCA) to construct the boardwalk. To protect water quality, all CCA-treated lumber must be cured on dry land in a manner that exposes all surfaces to the air for 21 days prior to the start of construction.

Provided that CCA-treated lumber is cured as described above, the Department finds that the proposed project will not violate any state water quality law, including those governing the classification of the State's waters.

6. OTHER CONSIDERATIONS:

The streetscape improvements will be constructed in the uplands immediately adjacent to the shoreline, the extended boardwalk will be built over the rip rap shoreline above the normal high water line, and the pedestrian bridge superstructure will be placed on the existing abutments and span the river. No direct impacts to freshwater wetlands or the Presumpscot River are anticipated from the proposed project. Impacts from the Bridge Street bridge replacement were addressed in PBR #57025 referenced in Finding 1.

The Department did not identify any other issues involving existing scenic, aesthetic, or navigational uses, soil erosion, habitat or fisheries, the natural transfer of soil, natural flow of water, water quality, or flooding.

BASED on the above findings of fact, and subject to the conditions listed below, the Department makes the following conclusions pursuant to 38 M.R.S.A. Sections 480-A et seq. and Section 401 of the Federal Water Pollution Control Act:

A. The proposed activity will not unreasonably interfere with existing scenic, aesthetic, recreational, or navigational uses.

B. The proposed activity will not cause unreasonable erosion of soil or sediment.

C. The proposed activity will not unreasonably inhibit the natural transfer of soil from the terrestrial to the marine or freshwater environment.

D. The proposed activity will not unreasonably harm any significant wildlife habitat, freshwater wetland plant habitat, threatened or endangered plant habitat, aquatic or adjacent upland habitat, travel corridor, freshwater, estuarine, or marine fisheries or other aquatic life.

E. The proposed activity will not unreasonably interfere with the natural flow of any surface or subsurface waters.

F. The proposed activity will not violate any state water quality law including those governing the classifications of the State's waters provided that CCA-treated lumber is cured as described in Finding 5.

G. The proposed activity will not unreasonably cause or increase the flooding of the alteration area or adjacent properties.

H. The proposed activity is not on or adjacent to a sand dune.

I. The proposed activity is not on an outstanding river segment as noted in Title 38 M.R.S.A. Section 480-P.

THEREFORE, the Department APPROVES the above noted application of the CITY OF WESTBROOK to extend an existing boardwalk closer to the Presumpscot River, to construct additional streetscape improvements along the shore of the river, and to install a 10-foot wide pedestrian bridge at the location of the existing Bridge Street bridge as described in Finding 1, SUBJECT TO THE ATTACHED CONDITIONS, and all applicable standards and regulations:

1. Standard Conditions of Approval, a copy attached.

2. The applicant shall take all necessary measures to ensure that its activities or those of its agents do not result in measurable erosion of soil on the site during the construction of the project covered by this approval.

3. Severability. The invalidity or unenforceability of any provision, or part thereof, of this License shall not affect the remainder of the provision or any other provisions. This License shall be construed and enforced in all respects as if such invalid or unenforceable provision or part thereof had been omitted.

4. All CCA-treated lumber shall be cured on dry land in a manner that exposes all surfaces to the air for 21 days prior to the start of construction.

THIS APPROVAL DOES NOT CONSTITUTE OR SUBSTITUTE FOR ANY OTHER REQUIRED STATE, FEDERAL OR LOCAL APPROVALS NOR DOES IT VERIFY COMPLIANCE WITH ANY APPLICABLE SHORELAND ZONING ORDINANCES.

DONE AND DATED IN AUGUSTA, MAINE, THIS 24th DAY OF September, 2014.

DEPARTMENT OF ENVIRONMENTAL PROTECTION

Filed
SEP 24 2014
State of Maine
Board of Environmental Protection

BY: Michael Kuhn
For: Patricia W. Aho, Commissioner

PLEASE NOTE THE ATTACHED SHEET FOR GUIDANCE ON APPEAL PROCEDURES…

RLG/L21050CN/ATS#77908

Natural Resources Protection Act (NRPA)
Standard Conditions

THE FOLLOWING STANDARD CONDITIONS SHALL APPLY TO ALL PERMITS GRANTED UNDER THE NATURAL RESOURCE PROTECTION ACT, TITLE 38, M.R.S.A. SECTION 480-A ET.SEQ. UNLESS OTHERWISE SPECIFICALLY STATED IN THE PERMIT.

A. Approval of Variations From Plans. The granting of this permit is dependent upon and limited to the proposals and plans contained in the application and supporting documents submitted and affirmed to by the applicant. Any variation from these plans, proposals, and supporting documents is subject to review and approval prior to implementation.

B. Compliance With All Applicable Laws. The applicant shall secure and comply with all applicable federal, state, and local licenses, permits, authorizations, conditions, agreements, and orders prior to or during construction and operation, as appropriate.

C. Erosion Control. The applicant shall take all necessary measures to ensure that his activities or those of his agents do not result in measurable erosion of soils on the site during the construction and operation of the project covered by this Approval.

D. Compliance With Conditions. Should the project be found, at any time, not to be in compliance with any of the Conditions of this Approval, or should the applicant construct or operate this development in any way other the specified in the Application or Supporting Documents, as modified by the Conditions of this Approval, then the terms of this Approval shall be considered to have been violated.

E. Time frame for approvals. If construction or operation of the activity is not begun within four years, this permit shall lapse and the applicant shall reapply to the Board for a new permit. The applicant may not begin construction or operation of the activity until a new permit is granted. Reapplications for permits may include information submitted in the initial application by reference. This approval, if construction is begun within the four-year time frame, is valid for seven years. If construction is not completed within the seven-year time frame, the applicant must reapply for, and receive, approval prior to continuing construction.

F. No Construction Equipment Below High Water. No construction equipment used in the undertaking of an approved activity is allowed below the mean high water line unless otherwise specified by this permit.

G. Permit Included In Contract Bids. A copy of this permit must be included in or attached to all contract bid specifications for the approved activity.

H. Permit Shown To Contractor. Work done by a contractor pursuant to this permit shall not begin before the contractor has been shown by the applicant a copy of this permit.

Revised (12/2011/DEP LW0428)

DEP INFORMATION SHEET

Appealing a Department Licensing Decision

Dated: March 2012 **Contact: (207) 287-2811**

SUMMARY

There are two methods available to an aggrieved person seeking to appeal a licensing decision made by the Department of Environmental Protection's ("DEP") Commissioner: (1) in an administrative process before the Board of Environmental Protection ("Board"); or (2) in a judicial process before Maine's Superior Court. An aggrieved person seeking review of a licensing decision over which the Board had original jurisdiction may seek judicial review in Maine's Superior Court.

A judicial appeal of final action by the Commissioner or the Board regarding an application for an expedited wind energy development (35-A M.R.S.A. § 3451(4)) or a general permit for an offshore wind energy demonstration project (38 M.R.S.A. § 480-HH(1)) or a general permit for a tidal energy demonstration project (38 M.R.S.A. § 636-A) must be taken to the Supreme Judicial Court sitting as the Law Court.

This INFORMATION SHEET, in conjunction with a review of the statutory and regulatory provisions referred to herein, can help a person to understand his or her rights and obligations in filing an administrative or judicial appeal.

I. ADMINISTRATIVE APPEALS TO THE BOARD

LEGAL REFERENCES

The laws concerning the DEP's *Organization and Powers*, 38 M.R.S.A. §§ 341-D(4) & 346, the *Maine Administrative Procedure Act*, 5 M.R.S.A. § 11001, and the DEP's *Rules Concerning the Processing of Applications and Other Administrative Matters* ("Chapter 2"), 06-096 CMR 2 (April 1, 2003).

HOW LONG YOU HAVE TO SUBMIT AN APPEAL TO THE BOARD

The Board must receive a written appeal within 30 days of the date on which the Commissioner's decision was filed with the Board. Appeals filed after 30 calendar days of the date on which the Commissioner's decision was filed with the Board will be rejected.

HOW TO SUBMIT AN APPEAL TO THE BOARD

Signed original appeal documents must be sent to: Chair, Board of Environmental Protection, c/o Department of Environmental Protection, 17 State House Station, Augusta, ME 04333-0017; faxes are acceptable for purposes of meeting the deadline when followed by the Board's receipt of mailed original documents within five (5) working days. Receipt on a particular day must be by 5:00 PM at DEP's offices in Augusta; materials received after 5:00 PM are not considered received until the following day. The person appealing a licensing decision must also send the DEP's Commissioner a copy of the appeal documents and if the person appealing is not the applicant in the license proceeding at issue the applicant must also be sent a copy of the appeal documents. All of the information listed in the next section must be submitted at the time the appeal is filed. Only the extraordinary circumstances described at the end of that section will justify evidence not in the DEP's record at the time of decision being added to the record for consideration by the Board as part of an appeal.

WHAT YOUR APPEAL PAPERWORK MUST CONTAIN

Appeal materials must contain the following information at the time submitted:

1. *Aggrieved Status.* The appeal must explain how the person filing the appeal has standing to maintain an appeal. This requires an explanation of how the person filing the appeal may suffer a particularized injury as a result of the Commissioner's decision.
2. *The findings, conclusions or conditions objected to or believed to be in error.* Specific references and facts regarding the appellant's issues with the decision must be provided in the notice of appeal.
3. *The basis of the objections or challenge.* If possible, specific regulations, statutes or other facts should be referenced. This may include citing omissions of relevant requirements, and errors believed to have been made in interpretations, conclusions, and relevant requirements.
4. *The remedy sought.* This can range from reversal of the Commissioner's decision on the license or permit to changes in specific permit conditions.
5. *All the matters to be contested.* The Board will limit its consideration to those arguments specifically raised in the written notice of appeal.
6. *Request for hearing.* The Board will hear presentations on appeals at its regularly scheduled meetings, unless a public hearing on the appeal is requested and granted. A request for public hearing on an appeal must be filed as part of the notice of appeal.
7. *New or additional evidence to be offered.* The Board may allow new or additional evidence, referred to as supplemental evidence, to be considered by the Board in an appeal only when the evidence is relevant and material and that the person seeking to add information to the record can show due diligence in bringing the evidence to the DEP's attention at the earliest possible time in the licensing process or that the evidence itself is newly discovered and could not have been presented earlier in the process. Specific requirements for additional evidence are found in Chapter 2.

OTHER CONSIDERATIONS IN APPEALING A DECISION TO THE BOARD

1. *Be familiar with all relevant material in the DEP record.* A license application file is public information, subject to any applicable statutory exceptions, made easily accessible by DEP. Upon request, the DEP will make the material available during normal working hours, provide space to review the file, and provide opportunity for photocopying materials. There is a charge for copies or copying services.
2. *Be familiar with the regulations and laws under which the application was processed, and the procedural rules governing your appeal.* DEP staff will provide this information on request and answer questions regarding applicable requirements.
3. *The filing of an appeal does not operate as a stay to any decision.* If a license has been granted and it has been appealed the license normally remains in effect pending the processing of the appeal. A license holder may proceed with a project pending the outcome of an appeal but the license holder runs the risk of the decision being reversed or modified as a result of the appeal.

WHAT TO EXPECT ONCE YOU FILE A TIMELY APPEAL WITH THE BOARD

The Board will formally acknowledge receipt of an appeal, including the name of the DEP project manager assigned to the specific appeal. The notice of appeal, any materials accepted by the Board Chair as supplementary evidence, and any materials submitted in response to the appeal will be sent to Board members with a recommendation from DEP staff. Persons filing appeals and interested persons are notified in advance of the date set for Board consideration of an appeal or request for public hearing. With or without holding a public hearing, the Board may affirm, amend, or reverse a Commissioner decision or remand the matter to the Commissioner for further proceedings. The Board will notify the appellant, a license holder, and interested persons of its decision.

II. JUDICIAL APPEALS

Maine law generally allows aggrieved persons to appeal final Commissioner or Board licensing decisions to Maine's Superior Court, see 38 M.R.S.A. § 346(1); 06-096 CMR 2; 5 M.R.S.A. § 11001; & M.R. Civ. P 80C. A party's appeal must be filed with the Superior Court within 30 days of receipt of notice of the Board's or the Commissioner's decision. For any other person, an appeal must be filed within 40 days of the date the decision was rendered. Failure to file a timely appeal will result in the Board's or the Commissioner's decision becoming final.

An appeal to court of a license decision regarding an expedited wind energy development, a general permit for an offshore wind energy demonstration project, or a general permit for a tidal energy demonstration project may only be taken directly to the Maine Supreme Judicial Court. See 38 M.R.S.A. § 346(4).

Maine's Administrative Procedure Act, DEP statutes governing a particular matter, and the Maine Rules of Civil Procedure must be consulted for the substantive and procedural details applicable to judicial appeals.

ADDITIONAL INFORMATION

If you have questions or need additional information on the appeal process, for administrative appeals contact the Board's Executive Analyst at (207) 287-2452 or for judicial appeals contact the court clerk's office in which your appeal will be filed.

Note: The DEP provides this INFORMATION SHEET for general guidance only; it is not intended for use as a legal reference. Maine law governs an appellant's rights.

11/01/2012

DEPARTMENT OF ENVIRONMENTAL PROTECTION

PERMIT BY RULE NOTIFICATION FORM

(For use with DEP Regulation, Chapter 305)

PLEASE TYPE OR PRINT IN *BLACK INK ONLY*

Name of Applicant: (owner)	Maine Department of Transportation	Name of Agent:	Kristen Chamberlain
Applicant Mailing Address:	16 State House Station	Agent Phone # (include area code):	(207) 557-5089
Town/City:	Westbrook	PROJECT Information Name of Town/City:	Westbrook
State and Zip code:	Maine	Name of Wetland or Waterbody:	Presumpscot River
Daytime Phone # (include area code):	(207) 624-3100	Map #:	Lot #:
Detailed Directions to Site:	Main Street, Westbrook to Bridge Street. See attached map.		
		UTM Northing: (if known)	UTM Easting: (if known)
Description of Project:	MaineDOT proposes to replace the existing Bridge Street Bridge upstream of the existing alignment. Bridge Street approaches will be re-aligned. Existing bridge will be retained by the City of Westbrook for re-use as bicycle/pedestrian bridge. The project includes streetscaping improvements to be completed by the City in the existing Bridge Streer spur and adjacent to the existing bridge.		

Part of a larger project? (check one)➔	☐ Yes ☑ No	After the Fact? (check one)➔	☐ Yes ☐ No

Check one➔ This project ☐ does (or) ☐ does not involve work below mean low water (average low water).

PERMIT BY RULE (PBR) SECTIONS: (Check at least one)

I am filing notice of my intent to carry out work which meets the requirements for Permit By Rule (PBR) under DEP Rules, Chapter 305. I and my agents, if any, **have read** and will comply with all of the standards in the Sections checked below.

- ☐ Sec. (2) Act. Adj. to Protected Natural Res.
- ☐ Sec. (3) Intake Pipes
- ☐ Sec. (4) Replacement of Structures
- ☐ Sec. (5) REPEALED
- ☐ Sec. (6) Movement of Rocks or Vegetation
- ☐ Sec. (7) Outfall Pipes
- ☐ Sec. (8) Shoreline stabilization
- ☐ Sec. (9) Utility Crossing
- ☐ Sec.(10) Stream Crossing
- ☑ Sec. (11) State Transportation Facil.
- ☐ Sec. (12) Restoration of Natural Areas
- ☐ Sec. (13) F&W Creation/Enhance/Water Quality Improvement
- ☐ Sec. (14) REPEALED
- ☐ Sec. (15) Public Boat Ramps
- ☐ Sec. (16) Coastal Sand Dune Projects
- ☐ Sec. (17) Transfers/Permit Extension
- ☐ Sec. (18) Maintenance Dredging
- ☐ Sec. (19) Activities in/on/over significant vernal pool habitat
- ☐ Sec. (20) Activities in existing dev. areas located in/on/over high or moderate value inland waterfowl & wading bird habitat or shorebird nesting, feeding & staging areas

I have attached the following required submittals. **NOTIFICATION FORMS CANNOT BE ACCEPTED WITHOUT THE NECESSARY ATTACHMENTS:**

- ☐ ***Attach*** **a check for $70 made payable to: "Treasurer, State of Maine".**
- ☑ ***Attach*** **a U.S.G.S. topo map or Maine Atlas & Gazetteer map with the project site clearly marked.**
- ☐ ***Attach Proof of Legal Name.*** If applicant is **not** an individual or municipality, provide a copy of Secretary of State's *registration information* (available at http://icrs.informe.org/nei-sos-icrs/ICRS?MainPage=x)
- ☐ ***Attach photos of the proposed site where activity will take place as outlined in PBR Sections checked above.***
- ☐ ***Attach*** **all other required submissions as outlined in the PBR Sections checked above.**

I authorize staff of the Departments of Environmental Protection, Inland Fisheries & Wildlife, and Marine Resources to access the project site for the purpose of determining compliance with the rules. I also understand that ***this permit is not valid until approved by the Department or 14 days after receipt by the Department, whichever is less.***

By signing this Notification Form, I represent that the project meets all applicability requirements and standards in the rule and that the applicant has sufficient title, right, or interest in the property where the activity takes place.

Signature of Agent or Applicant:	[signature]	Date:	8/20/13

Keep a copy as a record of permit. Send the form with attachments via certified mail or hand deliver to the Maine Dept. of Environmental Protection **at the appropriate regional office listed below.** The DEP will send a copy to the Town Office as evidence of the DEP's receipt of notification. No further authorization by DEP will be issued after receipt of notice. Permits are valid for two years. **Work carried out in violation of any standard is subject to enforcement action.**

AUGUSTA DEP	PORTLAND DEP	BANGOR DEP	PRESQUE ISLE DEP
17 STATE HOUSE STATION	312 CANCO ROAD	106 HOGAN ROAD	1235 CENTRAL DRIVE
AUGUSTA, ME 04333-0017	PORTLAND, ME 04103	BANGOR, ME 04401	PRESQUE ISLE, ME 04769
(207)287-3901	(207)822-6300	(207)941-4570	(207)764-0477

OFFICE USE ONLY	Ck.#		Staff	Staff	
PBR #	FP	Date	Acc. Date	Def. Date	After Photos

DEPLW0310-N2012

11. State transportation facilities

A. Applicability

(1) This section applies to the maintenance, repair, reconstruction, rehabilitation, replacement or minor construction of a State Transportation Facility carried out by, or under the authority of, the Maine Department of Transportation (MaineDOT) or the Maine Turnpike Authority, including any testing or preconstruction engineering, and associated technical support services.

(2) This section does not apply to an activity within a coastal sand dune system.

NOTE: The construction of a transportation facility other than roads and associated facilities may be subject to the Storm Water Management Law, 38 M.R.S.A. Section 420-D.

B. Standards

(1) Photographs of the area to be altered by the activity must be taken before work on the site begins. The photographs must be kept on file and be made available at the request of the DEP.

(2) The activity must be reviewed by the Department of Inland Fisheries and Wildlife and the Department of Marine Resources, as applicable. The applicant must coordinate with the reviewing agencies and incorporate any recommendations from those agencies into the performance of the activity.

(3) All construction activities undertaken must be detailed in a site-specific Soil Erosion and Water Pollution Control Plan and conducted in accordance with MaineDOT's Best Management Practices for Erosion and Sediment Control, dated January 2000, and Standard Specifications, dated December 2002.

(4) Alignment changes may not exceed a distance of 200 feet between the old and new center lines in any natural resource.

(5) The activity may not alter more than 300 feet of shoreline (both shores added together) within a mile stretch of any river, stream or brook, including any bridge width or length of culvert.

(6) The activity may not alter more than 150 feet of shoreline (both shores added together) within a mile stretch of any outstanding river segment identified in 38 M.R.S.A. 480-P, including any bridge width or length of culvert.

(7) The activity must minimize wetland intrusion. The activity is exempt from the provisions of Chapter 310, the Wetland and Waterbodies Protection Rules, if the activity alters less than 15,000 square feet of natural resources per mile of roadway (centerline measurement) provided that the following impacts are not exceeded within the 15,000 square foot area:

(a) 1,000 square feet of coastal wetland consisting of salt tolerant vegetation or shellfish habitat; or

(b) 5,000 square feet of coastal wetland not containing salt tolerant vegetation or shellfish habitat; or

(c) 1,000 square feet of a great pond.

All other activities must be performed in compliance with all sections of Chapter 310, the Wetland Protection Rules, except 310.2(C), 5(A), 9(A), 9(B) and 9(C).

(8) The activity may not permanently block any fish passage in any watercourse containing fish. The applicant must coordinate with the reviewing agencies listed in paragraph 2 above to improve fish passage and incorporate any recommendations from those agencies into the performance of the activity.

NOTE: For guidance on meeting the design objectives for fish passage, including peak flow, maximum velocity, mining depth and gradient, see the MaineDOT Waterbody and Wildlife Crossing Policy and Design Guide (July 2008), developed in conjunction with state and federal resource and regulatory agencies.

(9) Rocks may not be removed from below the normal high water line of any coastal wetland, freshwater wetland, great pond, river, stream or brook except to the minimum extent necessary for completion of work within the limits of construction.

(10) If work is performed in a river, stream or brook that is less than three feet deep at the time and location of the activity, the applicant must isolate the work area from the resource and divert stream flows around the work area, maintaining downstream flows while work is in progress.

(11) Wheeled or tracked equipment may not operate in the water. Equipment operating on the shore may reach into the water with a bucket or similar extension. Equipment may cross streams on rock, gravel or ledge bottom. If avoiding the operation of wheeled or tracked equipment in the water is not possible, the applicant must explain the need to operate in the water. Approval from the DEP to operate in the water must be in writing, and any recommendations from the DEP must be incorporated into the performance of the activity.

(12) All wheeled or tracked equipment that must travel or work in a vegetated wetland area must travel and work on mats or platforms.

(13) Any debris or excavated material must be stockpiled either outside the wetland or on mats or platforms. Erosion and sediment control best management practices must be used, where necessary, to prevent sedimentation. Any debris generated during the activity must be prevented from washing downstream and must be removed from the wetland or water body. Disposal of debris must be in conformance with the Maine Hazardous Waste, Septage and Solid Waste Management Act, 38 M.R.S.A. Section 1301 *et seq.*

(14) Work below the normal high water line of a great pond, river, stream or brook must be done at low water except for emergency work or work agreed to by the resource agencies listed in paragraph 2 above.

(15) Perimeter controls must be installed before the work starts. Disturbance of natural resources beyond the construction limits shown on the plans is not allowed under this rule.

NOTE: Guidance on the location of construction limits can be obtained from the on site Construction Manager.

(16) The use of untreated lumber is preferred. Lumber pressure treated with chromated copper arsenate (CCA) may be used only if necessary and only if use is allowed under federal law and not prohibited from sale under 38 M.R.S.A. 1682, and provided it is cured on dry land in a manner that exposes all surfaces to the air for a period of at least 21 days prior to construction. Wood treated with creosote or pentachlorophenol may not be used where it will contact water.

(17) A temporary road for equipment access must be constructed of crushed stone, blasted ledge, or similar materials that will not cause sedimentation or restrict fish passage. Such roads must be completely removed at the completion of the activity. In addition, any such temporary roads which are in rivers, streams or brooks, must allow for a passage of stormwater flows associated with a 10-year storm.

(18) Non-native species may not be planted in restored areas.

(19) Disposal of debris must be in conformance with Maine Hazardous Waste, Septage and Solid Waste Management Act, 38 M.R.S.A. Sections 1301 *et seq.*

(20) Disturbance of vegetation must be avoided, if possible. Where vegetation is disturbed outside of the area covered by any road or structure construction, it must be reestablished immediately upon completion of the activity and must be maintained.

(21) A vegetated area at least 25 feet wide must be established and maintained between any new stormwater outfall structure and the high water line of any open water body. A velocity reducing structure must be constructed at the outlet of the stormwater outfall that will create sheet flow of stormwater, and prevent erosion of soil within the vegetated buffer. If the 25 foot vegetated buffer is not practicable, the applicant must explain the reason for a lesser setback in writing. Approval from the DEP must be in writing and any recommendations must be incorporated into the activity.

C. Definitions. The following terms, as used in this chapter, have the following meanings, unless the context indicates otherwise:

(1) Diversion. The rerouting of a river, stream or brook around a construction site and then back to the downstream channel.

(2) Fill. a. (verb) To put into or upon, supply to, or allow to enter a water body or wetland any earth, rock, gravel, sand, silt, clay, peat, or debris; b. (noun) Material, other than structures, placed in or immediately adjacent to a wetland or water body.

(3) Floodplain wetlands. Freshwater wetlands that are inundated with flood water during a 100-year flood event based on flood insurance maps produced by the Federal Emergency Agency or other site specific information.

(4) Riprap. Heavy, irregularly shaped rocks that are fit into place, without mortar, on a slope as defined in the MaineDOT Standard Specifications, dated December 2002.

Environmental Summary Sheet

WIN: 19282.00 **Date Submitted: 9/23/14**
Town: Westbrook
CPD Team Leader: Kristen Chamberlain
ENV Field Contact: **Mike Clark**

NEPA Complete: **9/24/13- Individual Categorical Exclusion**

☒ **Section 106**

SHPO Concurrence-No Adverse Effect
Section 106 Resources: (1) Dana Warp Mill, 90 Bridge Street and (2) Presumpscot Electric Company, Saccarappa Station, Dana Street are eligible for listing on the National Register. No Adverse Effect based on project plans. Significant changes in these areas require review by MaineDOT ENV and MHPC.

☒ **Section 4(f) and 6(f)**

Section 4(f)
Review Complete- De minimus use on Dana Warp Mill Property: A permanent take of 1798 sq. ft.; a slope easement of 0.06 acres; 333 sq. of temporary rights will be needed for construction
Section 6(f)
Not Applicable

☒ **Maine Department of Inland Fisheries and Wildlife Essential Habitat**

Not Applicable **Timing Window: Not Applicable**

☒ **Section 7**

Not Applicable

☒ **Maine Department of Conservation/Public Lands, Submerged Land Lease**

Not Applicable

☒ **Maine Land Use Regulation Commission**

Not Applicable

**Applicable Standards and Permits are included with the contract*

☒ **Maine Department of Environmental Protection**

Permit by Rule (PBR) for Bridge
Individual NRPA for City Boardwalk Expansion
-In-water work July 1-March 31. Work trestle that is steel pipe pile supported/pinned to ledge at channel bottom without a cofferdam can be installed anytime between July 1 and April 1.

**Applicable Standards and Permits are included with the contract*

☒ **Army Corps of Engineers, Section 10 of the Rivers and Harbors Act and Section 404 of the Clean Water Act.**

Category 2
-No cofferdam installation or removal and no pile driving between April 1 and June 30
-Work Start Notification Form and Compliance Certification Form must be completed by ENV Field Contact and submitted to ACOE with copy to David Gardner and ENV Team Leader

**Applicable Standards and Permits are included with the contract*

☒ **Stormwater Review**

N/A

☒ **Special Provisions Required**

Special Provision 105-Timing of Work Restriction	N/A☐	Applicable☒
Special Provision 656-Erosion Control Plan	N/A☐	Applicable☒
Special Provision 203-Dredge Spec	N/A☐	Applicable☒
General Note for Hazardous Waste	N/A☒	Applicable☐
Special Provision 203-Hazardous Waste	N/A☐	Applicable☒
Special Provision 105.9	N/A☐	Applicable☐

**All permits and approvals based on plans/scope as of :9/20/13*