STATE OF MAINE
DEPARTMENT OF TRANSPORTATION

WESTBROOK
CUMBERLAND COUNTY
BRIDGE STREET BRIDGE
OVER
PRESUMPSCOT RIVER
BRIDGE STREET
FEDERAL AID PROJECT NO. STP-1928(200)
PROJECT LENGTH 0.099 mi.
BRIDGE REPLACEMENT
BRIDGE NO. 5661

SPECIFICATIONS

Design: AASHTO LRFD Bridge Design Specifications, Sixth Edition 2012.

DESIGN LOADING

Live Load ..... HL - 93 Modified for Strength I

TRAFFIC DATA

Current (2012) AADT	12570
Future (2032) AADT	15080
DHV - % of AADT	11%
Design Hour Volume	1659
Heavy Trucks (% of AADT)	4%
Heavy Trucks (% of DHV)	3%
Directional Distribution (% of DHV)	55%
18 kip Equivalent P 2.0	229
18 kip Equivalent P 2.5	218
Design Speed (mph)	25 mph

HYDROLOGIC DATA

Drainage Area	577 sq mi
Design Discharge (Q50)	15,700 cfs
Check Discharge (Q100)	18,900 cfs
Headwater Elevation (Q50)	53.1 ft
Headwater Elevation (Q100)	54.9 ft
Discharge Velocity (Q50)	7.1 fps
Discharge Velocity (Q100)	7.6 fps
Headwater Elevation (Q1.1)	43.0 ft
Discharge Velocity (Q1.1)	3.2 fps
Headwater Elevation (Q25)	51.5 ft

MATERIALS

Concrete:	
Curbs & Barriers	Class "LP"
Seals	Class "S"
All Other	Class "A"
Reinforcing Steel:	
Deck, Curbs, & Barriers	(Corrosion Resistant Reinforcing System)
All Other	ASTM A 615/A 615M, Grade 60
Structural Steel:	
All Material (except as noted)	ASTM A 709, Grade 50W (unpainted)
High Strength Bolts	ASTM A 325, Type 3
FRP Hybrid Composite Beams	See Special Provision for Section 509

BASIC DESIGN STRESSES

Concrete:	
Class "LP"	f 'c = 5,075 psi
Class "S"	f 'c = 2,900 psi
Class "A"	f 'c = 4,350 psi
Reinforcing Steel:	
ASTM A615/A615M, Grade 60	f y = 60,000 psi
Corrosion Resistant Reinforcing	See Special Provision for Section 503
Structural Steel:	
ASTM A 709, Grade 36	F y = 36,000 psi
ASTM A 325	F μ = 120,000 psi

UTILITIES

Portland Water District
Central Maine Power Company
FairPoint Communications
Unitil
Time Warner Cable
City of Westbrook
S.D. Warren/Sappi

MAINTENANCE OF TRAFFIC

Maintain Two-Way Traffic and Pedestrian Traffic on Existing Bridge.

LIST OF DRAWINGS

Title Sheet	1
Estimated Quantities	2
General Notes	3
General Plan 1-3	4-6
Bridge Street Profile	7
Boring Location Plan & Interpretive Subsurface Profile	8
Boring Logs	9
Conceptual Phasing Plan 1-2	10-11
Pavement & Structure Demolition Plan	12
Curb Geometry & Drainage Layout Plan 1-3	13-15
Signing & Striping Plan 1-3	16-18
Sign Summary 1-2	19-20
Utility Plan	21
Lighting Plan	22
Lighting Notes	23
Lighting Details 1-2	24-25
Traffic Signal Plan	26
Traffic Signal Notes	27
Concrete Pad & Bollard Details	28
Typical Sections	29
Cross Sections	30-37
Abut. No. 1 Seal & Footing	38
Abutment No. 1 Plan	39
Abutment No. 1 Sections	40
Abut. No. 1 Reinforcement	41
Abut No. 1 Wingwall Reinf.	42
Abut. No. 2 Seal & Footing	43
Abutment No. 2 Plan	44
Abutment No. 2 Sections	45
Abut. No. 2 Reinforcement	46
Abut. No. 2 Wingwall Reinf.	47
Pier Seal & Footing	48
Pier Plan	49
Pier Reinforcement	50
Bearing Details	51
Framing Plan	52
HCB Typical Sections and Chimney Details	53
HCB Reinforcing Details	54
FRP Layups, Beam Plan & El. & Bottom of Slab Elevations	55
Camber, Deflections & Arch Dimensions	56-57
Superstructure 1-2	58-59
Superstructure Reinf. 1-2	60
Pier Diaphragm	61
Bridge Drains	62
Approach Rail Details	63
Reinforcement Schedule 1-2	64-65
Multi-Use Bridge	66
Multi-Use Trail Profile	67
Exist. Abutment No. 1 Modifications & Repairs	68
Exist. Abutment No. 2 Modifications & Repairs	69
Exist. Wingwalls Modifications & Repairs	70
Exist. Abutment & Wingwalls Details	71
Right-Of-Way Map 1-3	72-74
Portland Water District Plans	W1-W4
Unitil Plans	1-7
Fairpoint & Time Warner Cable Plans	T1-T3
Central Maine Power Plans	E1-E3
City of Westbrook Plans	C0-C24

PROJECT LOCATION:	Within the City of Westbrook 300' North of Main Street carrying Bridge Street over the Presumpscot River. Lat./Long. 43°40'39.82" N, 70°22'01.37" W
PROGRAM AREA:	Highway Bridges - Traditional
OUTLINE OF WORK:	Bridge replacement with 365' of approach work; approximately 750' of roadway marking & striping, and minor curb and sidewalk reconstruction on Main Street; traffic signal installation at the new Bridge-Main Street intersection; and Riverwalk reconstrution.

Stantec

STATE OF MAINE
DEPARTMENT OF TRANSPORTATION
APPROVED
COMMISSIONER: DATE 10/21/14
CHIEF ENGINEER: 10-20-14

STATE OF MAINE TIMOTHY W. MERRITT No. 9294 LICENSED PROFESSIONAL ENGINEER

PROJECT INFORMATION	
PROGRAM	BRIDGE PROGRAM
PROJECT MANAGER	N. BENOIT
DESIGNER	T. MERRITT
CONSULTANT	STANTEC
PROJECT RESIDENT	
CONTRACTOR	
PROJECT COMPLETION DATE	

SIGNATURE
9294
P.E. NUMBER
9-15-14
DATE

19282.00

STP-1928(200)

WESTBROOK
BRIDGE STREET BRIDGE

TITLE SHEET

SHEET NUMBER
1
OF 74

Filename: ...\00\BRIDGE\MSTA\001_Title.dgn Division: BRIDGE Username: common Date:9/15/2014

SECTION 1 - ESTIMATED QUANTITIES

ITEM NO.	DESCRIPTION	QUANTITY	UNIT
201.23	REMOVING SINGLE TREE TOP ONLY	5	EA
201.24	REMOVING STUMP	5	EA
202.10	REM EXIST SUPERSTRS PROP CONTR (CONC. - 62CY, Steel - 90 T)	1	LS
202.12	REMOVING EXISTING STRUCTURAL CONCRETE	45	CY
202.111	REMOVING OF CONCRETE SIDEWALK	280	SY
202.14	REM EXIST RAILS (PROPERTY OF CONTRACTOR)	184	LF
202.15	REM MANHOLE OR CATCH BASIN	6	EA
202.20	REM BITUMINOUS CONC PAVEMENT	1100	SY
202.2005	REMOVE AND RELOCATE BIKE RACK AND TRASH RECEPTACLE	1	LS
203.20	COMMON EXCAVATION	1400	CY
203.2312	HEALTH AND SAFETY PLAN (HASP)	1	LS
203.2333	DISPOSAL/TREATMENT OF SPECIAL EXCAVATION	420	T
203.25	GRANULAR BORROW	1415	CY
206.082	STR EA EXC-MAJOR STRUCTURES	590	CY
206.092	STR RK EXC- MAJOR STRUCTURES	153	CY
206.10	STR EARTH EXC - PIERS	42	CY
206.11	STR ROCK EXC - PIERS	74	CY
304.10	AGGR SUBB COURSE - GRAVEL	1100	CY
403.207	HOT MIX ASPHALT 19.0 MM HMA	270	T
403.2081	12.5 MM POLYMER MODIFIED HMA	190	T
403.209	HOT MIX ASPHALT 9.5 MM (INCIDENTALS)	50	T
403.210	HOT MIX ASPHALT 9.5 MM	20	T
403.213	HOT MIX ASPHALT 12.5 MM BASE	36	T
403.2131	12.5 MM POLYMER MODIFIED HMA BASE	190	T
409.15	BITUMINOUS TACK COAT - APPLIED	120	G
502.21	STR CONC ABUT & RET WALL	78	CY
502.219	STR CONC ABUT & RET WALL (455 CY)	1	LS
502.22	STR CONC ABUT & RET WALL UW	220	CY
502.239	STR CONC PIERS (129 CY)	1	LS
502.24	STR CONC PIERS UW	190	CY
502.25	STR CONC SUPERSTR SLAB (190 CY)	1	LS
502.31	STR CONC APPROACH SLAB (44 CY)	1	LS
502.341	STR CONC ROADWAY MEDIAN	10	CY
502.49	STRUCT.CONC. CURBS AND SW (20 CY)	1	LS
502.56	CONCRETE FILL	30	CY
502.72	FRP BRIDGE DRAIN - TYPE A	8	EA
503.12	REINF STEEL, FAB & DEL	69000	LB
503.13	REINF STEEL, PLACING	69000	LB
507.0821	STEEL BR RAIL, 3 BAR (310 LF)	1	LS
508.14	HIGH PERFORMANCE WATERPROOFING MEMBRANE (700 SY)	1	LS
509.70	COMPOSITE BEAM (14 EA)	1	LS
511.07	COFFERDAM: ABUT 1	1	LS
511.07	COFFERDAM: ABUT 2	1	LS
511.07	COFFERDAM: PIER	1	LS
512.081	FRENCH DRAINS (140 LF)	1	LS
514.06	CURING BOX FOR CONC CYL	1	EA
515.20	PROT COAT FOR CONC SURFACES	92	SY
518.51	REPAIR OF UPWARD FAC SURF-BELOW RE STEEL	110	SF
518.60	REPAIR OF VERTICAL SURFACES < 7.9 IN.	60	SF
518.61	REPAIR OF VERTICAL SURFACES > 7.9 IN.	2	CY
518.80	CRACK REPAIR	50	LF
520.232	EXPANSION DEVICE - ASPHALTIC PLUG JOINT	64	LF
523.52	BEARING INSTALLATION	28	EA
523.5402	LAMINATED ELASTOMERIC BEARINGS,EXPANSION	28	EA
525.26	REPOINTING GRANITE MASONRY	600	SF
526.301	TEMPORARY CONC BARRIER TYPE I (700 LF)	1	LS
526.34	PERMANENT CONC TRANSITION BARRIER	4	EA
527.3031	ENERGY ABSORBING SYSTEM (ET-PLUS 25 FT. LENGTH)	1	EA
527.34	WORK ZONE CRASH CUSHIONS	4	UN
530.01	STEEL PEDESTRIAN BRIDGE	1	LS
530.34	FRP STAY-IN-PLACE FORM	4100	SF
602.30	FLOWABLE CONCRETE FILL	4	CY

ESTIMATED QUANTITIES

ITEM NO.	DESCRIPTION	QUANTITY	UNIT
603.159	12" CULV PIPE OPTION III	4	LF
603.179	18" CULV PIPE OPTION III	260	LF
604.072	CATCH BASIN TYPE A1-C	5	EA
604.092	CATCH BASIN TYPE B1-C	1	EA
604.166	REBUILDING MANHOLE	1	EA
604.18	ADJUST MANHOLE OR CB TO GRADE	7	EA
604.249	CATCH BASIN TYPE F6-C	1	EA
606.1721	BRIDGE TRANSITION - TYPE 1	4	EA
606.23	GR TY 3C - SINGLE RAIL	137.5	LF
606.231	GR TY 3C - 15 FOOT RADIUS AND LESS	37.5	LF
606.259	ANCHORAGE ASSEMBLY	3	EA
606.265	TERM END- SGL RAIL- GALV STEEL	3	EA
606.353	REFLECTORIZED FLEXIBLE GUARDRAIL MARKER	8	EA
606.614	TIMBER GUARDRAIL REMOVED AND STACKED	150	LF
607.47	BIRD BARRIER	50	LF
608.08	REINFORCED CONCRETE SIDEWALK	120	SY
608.26	CURB RAMP DETECTABLE WARNING FIELD	110	SF
609.11	VERT CURB TYPE 1	100	LF
609.12	VERT CURB TYPE 1- CIRCULAR	140	LF
609.237	TERMINAL CURB TYPE 1 - 7 FOOT	18	EA
609.2371	TERMINAL CURB TYPE 1- 7 FT - CIRCULAR	13	EA
609.38	RESET CURB TYPE 1	1390	LF
609.441	CURBING REMOVED AND STACKED	800	LF
610.08	PLAIN RIPRAP	770	CY
610.18	STONE DITCH PROTECTION	45	CY
613.319	EROSION CONTROL BLANKET	80	SY
615.07	LOAM	90	CY
618.1301	SEEDING METHOD NUMBER 1 - PLAN QUANTITY	6	UN
618.1411	SEEDING METHOD NUMBER 3 - PLAN QUANTITY	2	UN
619.12	MULCH	8	UN
619.1401	EROSION CONTROL MIX	10	CY
620.58	EROSION CONTROL GEOTEXTILE	1190	SY
626.11	PRECAST CONCRETE JUNCTION BOX	6	EA
626.22	NON-METALLIC CONDUIT	420	LF
626.31	18" FOUNDATION	4	EA
626.341	LIGHT STANDARD FOUNDATION	23	EA
626.35	CONTROLLER CABINET FOUNDATION	1	EA
626.36	REM OR MOD CONCRETE FOUNDATION	27	EA
627.18	12" SOLID WHITE PAVEMENT MARKING	1170	LF
627.733	4" WHITE OR YELLOW PAINTED PAVE MRK LINE	1800	LF
627.75	WHITE OR YELLOW PAVEMENT & CURB MARKING	650	SF
627.76	TEMPORARY PVMT. MARK LINE, W OR YELLOW	1	LS
627.77	REMOVING PAVEMENT MARKINGS	2200	SF
629.05	HAND LABOR, STRAIGHT TIME	60	HR
631.12	ALL-PURPOSE EXC (INC OPERATOR)	100	HR
631.14	GRADER (INCLUDING OPERATOR)	60	HR
631.15	ROLLER EARTH BASE CRS (INC OP)	60	HR
631.172	TRUCK-LARGE (INC OPERATOR)	140	HR
631.22	FRONT END LOADER (INC OPER)	60	HR
634.16	HIGHWAY LIGHTING	1	LS
634.2102	TYPE B LIGHT STANDARD	10	EA
634.2103	TYPE C LIGHT STANDARD	2	EA
637.071	DUST CONTROL	1	LS
639.18	FIELD OFFICE TYPE A	1	EA
643.80	TRAFFIC SIGNALS AT BRIDGE ST. & MAIN ST.	1	LS
643.86	TRAFFIC SIGNAL LOOP DETECTORS	6	EA
643.91	MAST ARM POLE	3	EA
643.92	PEDESTAL POLE	4	EA
645.103	DEMOUNT GUIDE SIGN	10	EA
645.106	DEMOUNT REG, WRNG, CONF & RTE MARKER SGN	36	EA
645.108	DEMOUNT POLE	22	EA
645.113	REINSTALL GUIDE SIGN	6	EA
645.116	REINST REG, WRN, CONF, & RTE MARKER SIGN	6	EA
645.118	REINSTALL POLE	3	EA
645.291	ROADSIDE GUIDE SIGNS TYPE II	24	SF
645.292	REG,WARN,CONF,RT SIGNS TYPE II	220	SF
652.312	TYPE III BARRICADE	6	EA
652.33	DRUM	30	EA

ESTIMATED QUANTITIES

ITEM NO.	DESCRIPTION	QUANTITY	UNIT
652.34	CONE	20	EA
652.35	CONSTRUCTION SIGNS	250	SF
652.361	MAINTENANCE OF TRAFFIC CONTROL DEVICES (840 CD)	1	LS
652.38	FLAGGER	5000	HR
652.381	TRAFFIC OFFICER	100	HR
652.41	PORTABLE CHANGEABLE MESSAGE SIGN	3	EA
656.75	TEMP SOIL EROSION & WATER POLLUTION CTRL	1	LS
659.10	MOBILIZATION	1	LS
823.332	GATE VALVE BOX, ADJUST TO GRADE	1	EA
830.17	UTILITY CONDUIT BR CROSS HANGER SYS - LIGHTING	1	LS
830.17	UTILITY CONDUIT BRIDGE CROSSING - MULTI-USE BRIDGE LIGHTING	1	LS
841.481	REMOVABLE BOLLARD	3	EA
845.10	STRUCTURAL STEEL UTILITY SUPPORT (4500 LB)	1	LS
910.301	SPECIAL WORK: REMOVE AND RESET PCMG WALL	1	LS
910.301	SPECIAL WORK: RIVERWALK REMOVED AND STACKED	1	LS
910.301	SPECIAL WORK: BUS SHELTER CONCRETE PAD	1	LS
PORTLAND WATER DISTRICT MAIN			
203.25	GRANULAR BORROW	100	CY
304.09	AGGR BASE CRS - CRUSHED	50	CY
304.10	AGGR SUBB COURSE - GRAVEL	200	CY
403.207	HOT MIX ASPHALT 19.0 MM HMA	120	T
403.208	HOT MIX ASPHALT 12.5 MM HMA SURFACE	55	T
608.08	REINFORCED CONCRETE SIDEWALK	55	SY
609.38	RESET CURB TYPE 1	60	LF
625.01	WATER LINE SYSTEM	1	LS
629.05	HAND LABOR, STRAIGHT TIME	30	HR
631.12	ALL-PURPOSE EXC (INC OPERATOR)	20	HR
631.172	TRUCK-LARGE (INC OPERATOR)	20	HR
631.22	FRONT END LOADER (INC OPER)	20	HR
652.38	FLAGGER	350	HR
652.381	TRAFFIC OFFICER	150	HR
822.315	TAPPING SLEEVE	3	EA
822.3225	6" CL 52 DI PIPE PUSH ON JOINT	105	LF
822.3405	8" CL 52 DI PIPE PUSH ON JOINT	70	LF
822.3605	12" CL 52 DI PIPE PUSH ON JOINT	630	LF
822.3632	12" CL 52 DI PIPE RESTRAINED JOINT - PREINSULATED	320	LF
822.3633	12" CL 52 DI PIPE RESTRAINED JOINT	20	LF
823.31	12" GATE VALVE	4	EA
823.325	8" GATE VALVE	6	EA
823.331	6" GATE VALVE	7	EA
823.34	BLOW OFF VALVE ASSEMBLY	1	EA
823.341	AIR RELEASE VALVE	3	EA
824.30	FIRE HYDRANT	1	EA
824.32	REMOVE/RESET HYDRANT	1	EA
825.43	1" COPPER SERVICE	135	LF
825.431	1 1/2 " COPPER SERVICE	25	LF
827.301	ROCK EXCAVATION WATER MAIN	50	CY
827.302	UNSUITABLE SOIL EXCAVATION - BELOW GRADE	50	CY
830.15	WATER MAIN BRIDGE CROSSING HANGER SYSTEM	1	LS
UNITIL GAS MAIN			
631.231	CRANE-45 T CAPACITY (INC OPER)	40	HR
827.362	GAS MAIN TRENCHING	320	LF
830.16	GAS MAIN BRIDGE CROSSING HANGER SYSTEM	1	LS
CENTRAL MAINE POWER CONDUITS			
910.301	SPECIAL WORK - UTILITY CONDUIT (CMP)	1	LS
FAIRPOINT APPROACH CONDUITS			
910.301	SPECIAL WORK - UTILITY CONDUIT (FAIRPOINT - APPROACH)	1	LS
TIME WARNER CABLE APPROACH CONDUITS			
910.301	SPECIAL WORK - UTILITY CONDUIT (TWC - APPROACH)	1	LS
FAIRPOINT & TIME WARNER CABLE BRIDGE CONDUITS			
910.301	SPECIAL WORK - UTILITY CONDUIT (FP & TWC - BRIDGE)	1	LS

Stantec

STATE OF MAINE
DEPARTMENT OF TRANSPORTATION

STP-1928(200)

WIN 19282.00

BRIDGE NO. 5661

BRIDGE PLANS

		BY	DATE
PROJ. MANAGER			
DESIGN-DETAILED	NATE BENOIT	DOT	SEPT 2014
CHECKED-REVIEWED	DOT	DOT	SEPT 2014
DESIGN2-DETAILED2	TWM	TPL/TWM	SEPT 2014
DESIGN3-DETAILED3	TPL	PZA	SEPT 2014
REVISIONS 1			
REVISIONS 2			
REVISIONS 3			
REVISIONS 4			
FIELD CHANGES			

SIGNATURE

P.E. NUMBER

DATE

BRIDGE STREET BRIDGE
PRESUMPSCOT RIVER
WESTBROOK CUMBERLAND COUNTY

ESTIMATED QUANTITIES

SHEET NUMBER

2

OF 74

Filename: ...\00\BRIDGE\MSTA\002_QTYS.dgn Division: BRIDGE Username: common Date:10/2/2014

GENERAL CONSTRUCTION NOTES

1. All underground utility facilities shall be adjusted by the respective utilities unless otherwise noted. The Portland Water District's water main relocation, Unitil's gas main relocation, Central Maine Power, Fairpoint, and Time Warner Cable conduit relocations are part of this contract. See Section 104 special provisions for more details.

2. For easements, construction limits, and right-of-way lines, refer to Right-of-Way Map.

3. During construction, Bridge Street will remain open with lane closures allowed at certain times for specific work. The Bridge Steet Spur may be closed at certain times. See Special Provision Section 652 for more details.

4. Place a 24 inch wide strip of Temporary Erosion Control Blanket on the side slopes along the top of the riprap and behind the wingwalls.

5. All embankment material, except as otherwise shown, placed below EL. 43 shall be Granular Borrow meeting the requirements of Subsection 703.19, Material for Underwater Backfill.

6. The clearing limits as shown on the plans are approximate. The exact limits will be established in the field by the Resident. Payment for clearing will be considered incidental to related Contract items.

7. Place loam 4 inches deep on all new or reconstructed sideslopes, or as directed by the Resident.

8. Do not excavate for Aggregate Subbase Course where existing material is suitable as determined by the Resident.

9. In areas where the Resident directs the Contractor not to excavate to the subgrade line shown on the plans, payment for removing existing pavement, grubbing, shaping, ditching, and compacting the existing subbase and layers of new subbase 6 inches or less thick will be made under appropriate equipment rental items.

10. Erosion Control Mix may be substituted in those areas normally receiving loam and seed as directed by the Resident. Placement shall be in accordance with Standard Specifications Section 619, Mulch. Payment will be made under Item No. 619.1401, Erosion Control Mix.

11. An NCHRP350 compliant guardrail end treatment shall be installed concurrently with the placement of each section of beam guardrail, unless otherwise shown on the plans.

12. Extended-use Erosion Control Blanket, seeded gutters, riprap downspouts, and other gutters lined with Stone Ditch Protection shall be constructed after paving and shoulder work is completed, where it is apparent that runoff will cause continual erosion. Payment will be made under the appropriate Contract items.

13. Protective Coating for Concrete Surfaces shall be applied to the following areas:
- All exposed surfaces of concrete curbs
- Fascia down to drip notch
- All exposed surfaces of Concrete Transition Barriers

14. Place riprap on slopes steeper than 2H:1V, or as directed by the Resident.

15. Project information referred to below may be accessed at the following MaineDOT web address: http://maine.gov/mdot/contractors/#projecttbl

16. The existing bridge and the City's riverwalk plans may be accessed at the MaineDOT web address. The plans are reproductions of the original drawings as prepared for the construction of the bridge. It is very unlikely that the plans will show any construction field changes or any alterations which may have been made to the bridge or riverwalk during their life span.

17. The hydrologic report of the bridge site may be accessed at the MaineDOT web address. The hydrologic report is based on MaineDOT's interpretation of the information obtained for the subject site. No assurance is given that the information or the conclusions of the report will be representative of actual conditions at the time of construction.

18. Bidders and Contractors may obtain a copy of the project geotechnical report, "Bridge Street Bridge over Presumpscot River," Report No. 2013-12, March 6, 2013, which may be accessed at the MaineDOT web address.

19. Geotechnical Information furnished or referred to in this plan set is for the use of the Bidders and the Contractor. No assurance is given that the information or interpretations will be representative of actual subsurface conditions at the time of construction. MaineDOT shall not be responsible for the Bidder's and Contractor's interpretations of, or conclusions drawn from, the Geotechnical Information. The boring logs contained in the plan set present factual and interpretive subsurface information collected at discrete locations. Data provided may not be representative of the subsurface conditions between boring locations.

20. Quantities included for pay items measured and paid for by Lump Sum are estimated quantities and are provided by MaineDOT for informational purposes only. Lump Sum pay items will be paid for at the Contract Bid amount, with no addition or reduction in payment to the Contractor if the actual final quantities are different from the MaineDOT provided estimated quantities, except as follows:

a. If a Lump Sum pay item is eliminated, the requirements of Standard Specifications Section 109.2, Elimination of Items, will take precedence.

b. If other Contract Documents specifically allow a change in payment for a Lump Sum pay item, those requirements will be followed.

c. If a design change results in changes to estimated quantities for Lump Sum pay items, price adjustments will be made in accordance with Standard Specifications Section 109.7, Equitable Adjustments to Compensation.

21. The Contractor shall submit a Bridge Demolition Plan to the Resident at least 10 business days prior to the start of demolition work. The plan shall outline the methods and equipment to be used to remove and dispose of all materials included in the existing bridge superstructure. No work related to the removal of the bridge shall be undertaken by the Contractor until MaineDOT has reviewed the Bridge Demolition Plan for appropriateness and completeness. Payment for all work necessary for developing, submitting and finalizing the Demolition Plan will be considered incidental to the bridge superstructure removal pay item.

22. The existing bridge superstructure shall be removed by and become the property of the Contractor. The steel portions of the existing bridge may be coated with a lead-based paint system. The Contractor is responsible for the containment, proper management and disposal of all lead-contaminated hazardous waste generated by the process of demolishing the bridge. The Contractor is responsible for implementing appropriate OSHA mandated personal protection standards related to this process. Once the existing bridge is removed, the Contractor is solely responsible for the care, custody and control of the components of the existing bridge and any hazardous waste generated as a result of the storage, recycling or disposal of the bridge components, including lead-coated steel. The Contractor shall recycle or reuse the steel in accordance with the Maine Department of Environmental Protection's "Maine Hazardous Waste Management Regulations," Chapter 850. A copy of this regulation is available at MaineDOT's offices on Child Street in Augusta. Payment for all labor, materials, equipment and other costs required to remove and dispose of the existing bridge will be considered incidental to the bridge removal pay item.

23. Removal of Existing Superstructure (Property of Contractor) shall include pavement, reinforced concrete, sidewalk, railing, bearings, structural steel (stringers, floorbeams, girders, other incidental steel components), expansion joints, and all other material on or over the superstructure.

24. A Maine Department of Environmental Protection (MDEP) database review indicated a Brownfield site in the Saccarappa Park and Bridge Street Spur area. The Contractor shall remain alert for any additional evidence of contamination. If the Contractor encounters evidence of soil or groundwater contamination, the Contractor shall secure the excavation, stop work in the contaminated area, and immediately notify the Resident. The Resident shall contact the Hydrogeologist in MDOT's Environmental Office at 207-624-3100 and the Maine Department of Environmental Protection at 800-482-0777. Work may only continue with authorization from the Resident. See Special Provision Section 203 for more details.

25. Any necessary cleaning of existing pavement prior to paving shall be incidental to the related paving items.

26. No existing drainage shall be abandoned, removed or plugged without approval from the Resident.

27. Any necessary cutting of existing pipes or drainage structures to fit proposed pipe or drainage structures shall not be paid for separately and will be considered incidental to the new pipe or drainage structure.

28. Any base pavement not surfaced before winter will require temporary pavement markings matching the final condition.

29. The Contractor will be responsible for maintaining all existing mailboxes to ensure that the mail will be deliverable. No separate payment will be made for this work; it shall be considered incidental to the contract.

30. Any damage to the slopes caused by the Contractor's equipment, personnel, or operation shall be repaired to the satisfaction of the resident. All work, equipment and materials required to make repairs shall be at the Contractor's expense.

31. All work shall be done in accordance with the Maine Department of Transportation's Best Management Practices for Erosion Control & Sediment Control, February, 2008.

32. All exposed edges of concrete shall be chamfered $\frac{5}{8}" \pm \frac{1}{8}"$.

33. See City Plans for parking redevelopment, existing Bridge Street work, Main Street parking, Multi-use Bridge approach work with viewing platforms, and Riverwalk expansion at Saccarappa Park.

34. Portions of the existing City Riverwalk foundations, steel and timber framing, and ornamental railing are to be removed and stacked for re-use on the City project. Re-installation of the salvaged Precast Concrete Modular Gravity wall is detailed on the City Plans.

35. The Contractor shall replace any impacted section of the Riverwalk as a result of their operations or construction access at their expense.

36. The Contractor's operations shall not have any impacts to the normal operations of S.D. Warren/Sappi's upstream Saccarappa hydroelectric dam, including its tailrace hydraulics and its electrical distribution and transmission. The dam is FERC regulated and is a run of the river dam. The Contractor's temporary construction access, any work trestle, and cofferdams shall be constructed and removed without impacting the dam tailrace or its hydraulics. The construction of any access causeway or embankment within the River shall not be permitted. Relocation of the Sappi aerial electric lines attached to the existing bridge will be performed by Sappi.

37. The roadway cross-sections on Sheets 30-37 do not show proposed lighting. Refer to Sheets 22-25 for proposed lighting details.

Stantec

PROJ. MANAGER	NATE BENOIT	BY	DATE
DESIGN-DETAILED	DOT	DOT	SEPT 2014
CHECKED-REVIEWED	TWM	TPL/TWM	SEPT 2014
DESIGN2-DETAILED2	TPL	PZA	SEPT 2014
DESIGN3-DETAILED3			
REVISIONS 1			
REVISIONS 2			
REVISIONS 3			
REVISIONS 4			
FIELD CHANGES			

SIGNATURE

P.E. NUMBER

DATE

STATE OF MAINE
DEPARTMENT OF TRANSPORTATION

STP-1928(200)

WIN 19282.00

BRIDGE NO. 5661

BRIDGE PLANS

BRIDGE STREET BRIDGE
PRESUMPSCOT RIVER
WESTBROOK CUMBERLAND COUNTY

GENERAL NOTES

SHEET NUMBER
3
OF 74

Filename: ...\00\BRIDGE\MSTA\003_NOTES.dgn Division: BRIDGE Username: common Date:9/15/2014

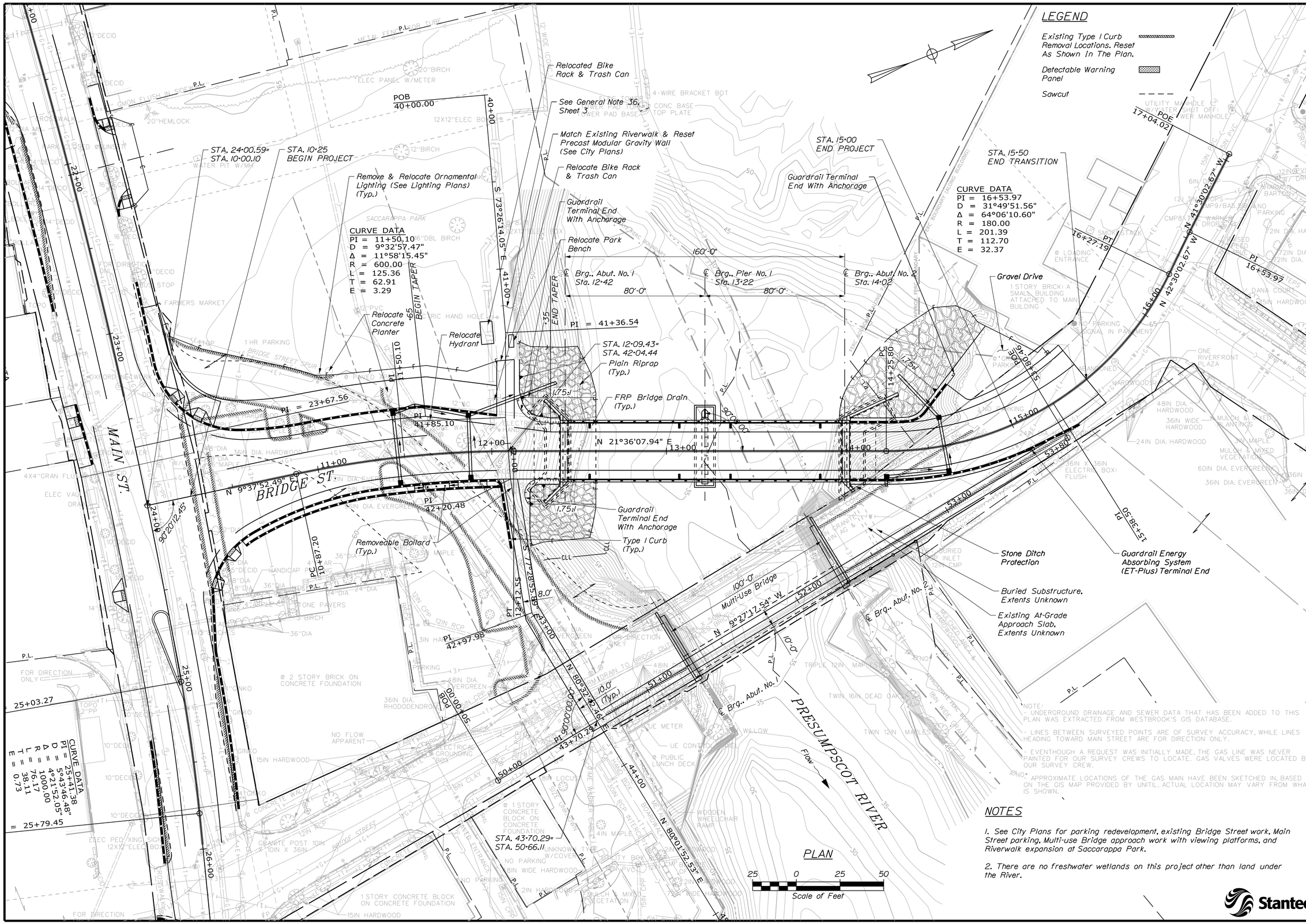

NOTES

1. See City Plans for parking redevelopment, existing Bridge Street work, Main Street parking, Multi-use Bridge approach work with viewing platforms, and Riverwalk expansion at Saccarappa Park.

2. There are no freshwater wetlands on this project other than land under the River.

Stantec

STATE OF MAINE
DEPARTMENT OF TRANSPORTATION

STP-1928(200)

WIN 19282.00

BRIDGE NO. 5661

BRIDGE PLANS

		BY	DATE
PROJ. MANAGER	NATE BENOIT		
DESIGN-DETAILED	DDT	DDT	SEPT 2014
CHECKED-REVIEWED	TWM	TPL/TWM	SEPT 2014
DESIGN2-DETAILED2	TPL	TPL	SEPT 2014
DESIGN3-DETAILED3			
REVISIONS 1			
REVISIONS 2			
REVISIONS 3			
REVISIONS 4			
FIELD CHANGES			

SIGNATURE

P.E. NUMBER

DATE

BRIDGE STREET BRIDGE
PRESUMPSCOT RIVER
WESTBROOK CUMBERLAND COUNTY

GENERAL PLAN 1

SHEET NUMBER

4

OF 74

Filename: ...\00\BRIDGE\MSTA\004_Plan_1.dgn Division: BRIDGE Username: common Date:10/1/2014

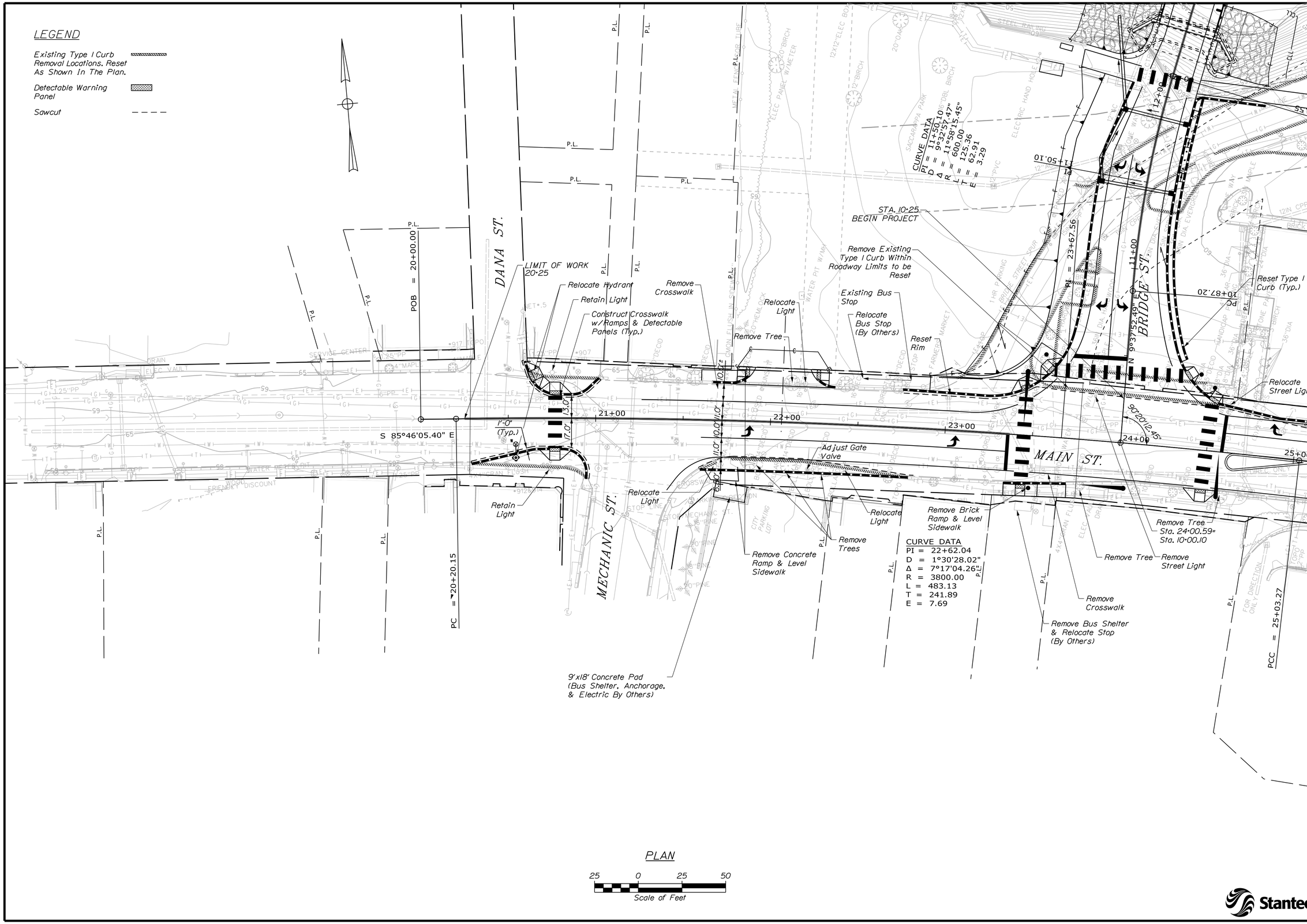

STATE OF MAINE
DEPARTMENT OF TRANSPORTATION

STP-1928(200)

WIN 19282.00

BRIDGE NO. 5661

BRIDGE PLANS

PROJ. MANAGER	NATE BENOIT	DATE
DESIGN-DETAILED	DDT	SEPT 2014
CHECKED-REVIEWED	TWM	SEPT 2014
DESIGN2-DETAILED2	TPL	SEPT 2014
DESIGN3-DETAILED3		
REVISIONS 1		
REVISIONS 2		
REVISIONS 3		
REVISIONS 4		
FIELD CHANGES		

P.E. NUMBER

DATE

SIGNATURE

BRIDGE STREET BRIDGE
PRESUMPSCOT RIVER
WESTBROOK CUMBERLAND COUNTY

GENERAL PLAN 2

SHEET NUMBER

5

OF 74

Stantec

Filename: ...\00\BRIDGE\MSTA\005_Plan_2.dgn Division: BRIDGE Username: common Date:9/15/2014

Filename: ...\00\BRIDGE\MSTA\006_Plan_3.dgn Division: BRIDGE Username: common Date:9/15/2014

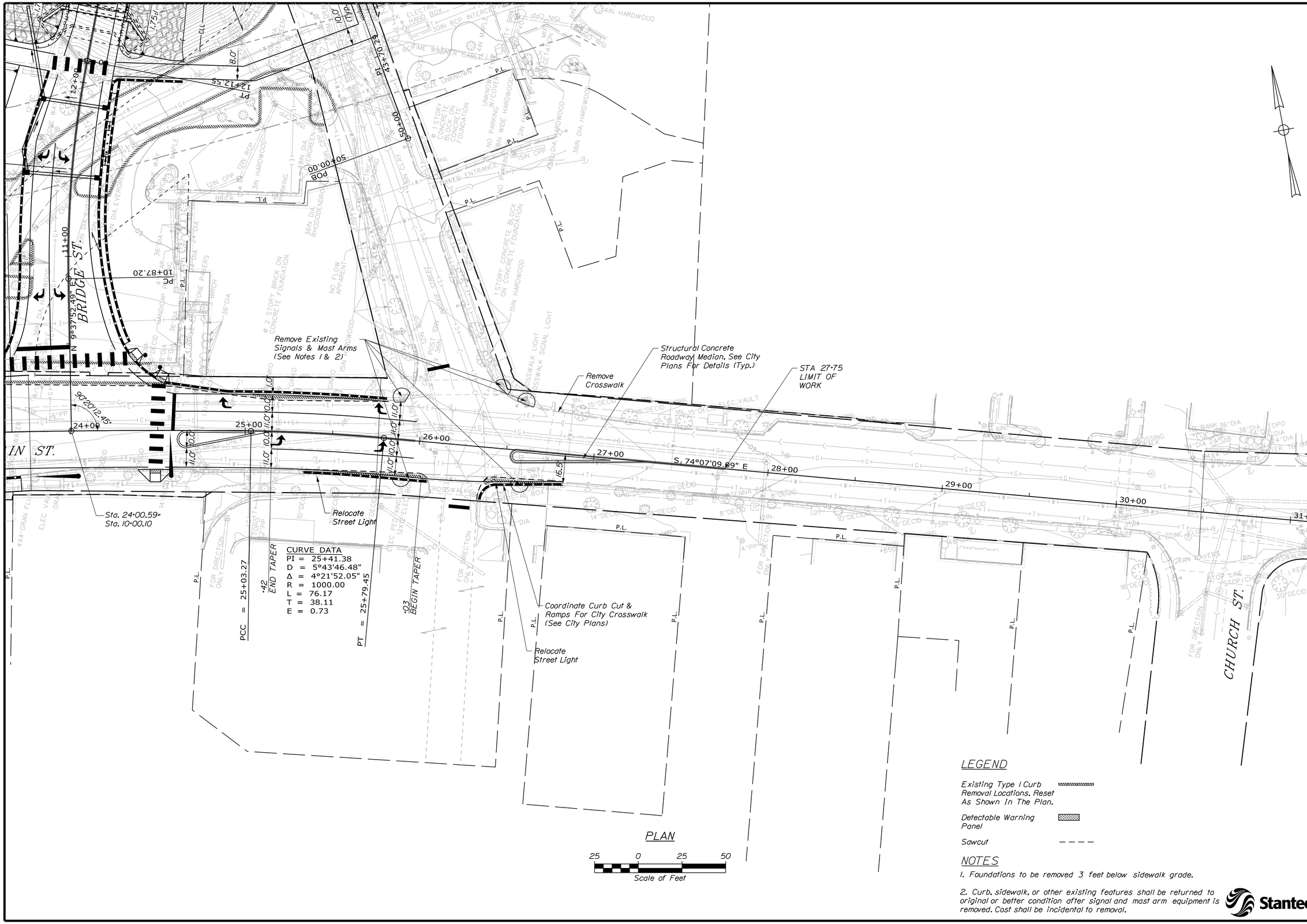

LEGEND

Existing Type I Curb Removal Locations. Reset As Shown In The Plan.

Detectable Warning Panel

Sawcut

NOTES

1. Foundations to be removed 3 feet below sidewalk grade.

2. Curb, sidewalk, or other existing features shall be returned to original or better condition after signal and mast arm equipment is removed. Cost shall be incidental to removal.

Stantec

STATE OF MAINE
DEPARTMENT OF TRANSPORTATION

STP-1928(200)

WIN 19282.00

BRIDGE NO. 5661

BRIDGE PLANS

		BY	DATE
PROJ. MANAGER			
DESIGN-DETAILED	NATE BENOIT	DDT	SEPT 2014
CHECKED-REVIEWED	DDT	TPL/TWM	SEPT 2014
DESIGN2-DETAILED2	TWM	PZA	SEPT 2014
DESIGN3-DETAILED3	TPL		
REVISIONS 1			
REVISIONS 2			
REVISIONS 3			
REVISIONS 4			
FIELD CHANGES			

SIGNATURE

P.E. NUMBER

DATE

BRIDGE STREET BRIDGE
PRESUMPSCOT RIVER
WESTBROOK CUMBERLAND COUNTY

GENERAL PLAN 3

SHEET NUMBER

6

OF 74

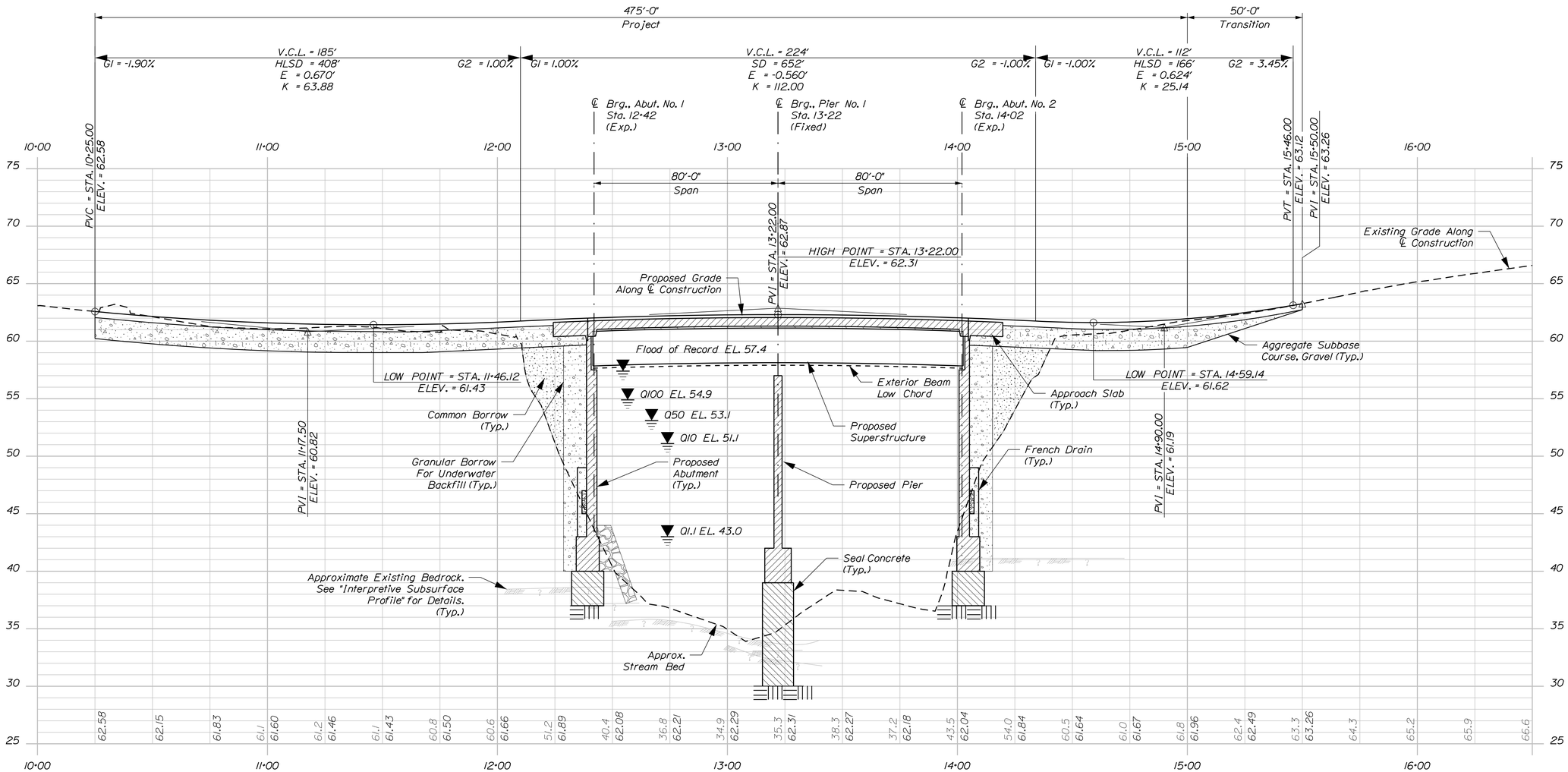

PROFILE

Horiz. 25 0 25 50

Vert. 5 0 5 10

Stantec

STATE OF MAINE
DEPARTMENT OF TRANSPORTATION

STP-1928(200)

WIN 19282.00

BRIDGE NO. 5661

BRIDGE PLANS

PROJ. MANAGER	NATE BENOIT			
DESIGN-DETAILED	DOT	DOT	SEPT 2014	DATE
CHECKED-REVIEWED	TWM	TPL/TWM	SEPT 2014	SIGNATURE
DESIGN2-DETAILED2	TPL	PZA	SEPT 2014	P.E. NUMBER
DESIGN3-DETAILED3				
REVISIONS 1				
REVISIONS 2				
REVISIONS 3				
REVISIONS 4				
FIELD CHANGES				DATE

BRIDGE STREET BRIDGE
PRESUMPSCOT RIVER
WESTBROOK CUMBERLAND COUNTY

BRIDGE STREET PROFILE

SHEET NUMBER

7

OF 74

Filename: ...\00\BRIDGE\MSTA\007_Profile.dgn Division: BRIDGE Username: common Date:9/15/2014

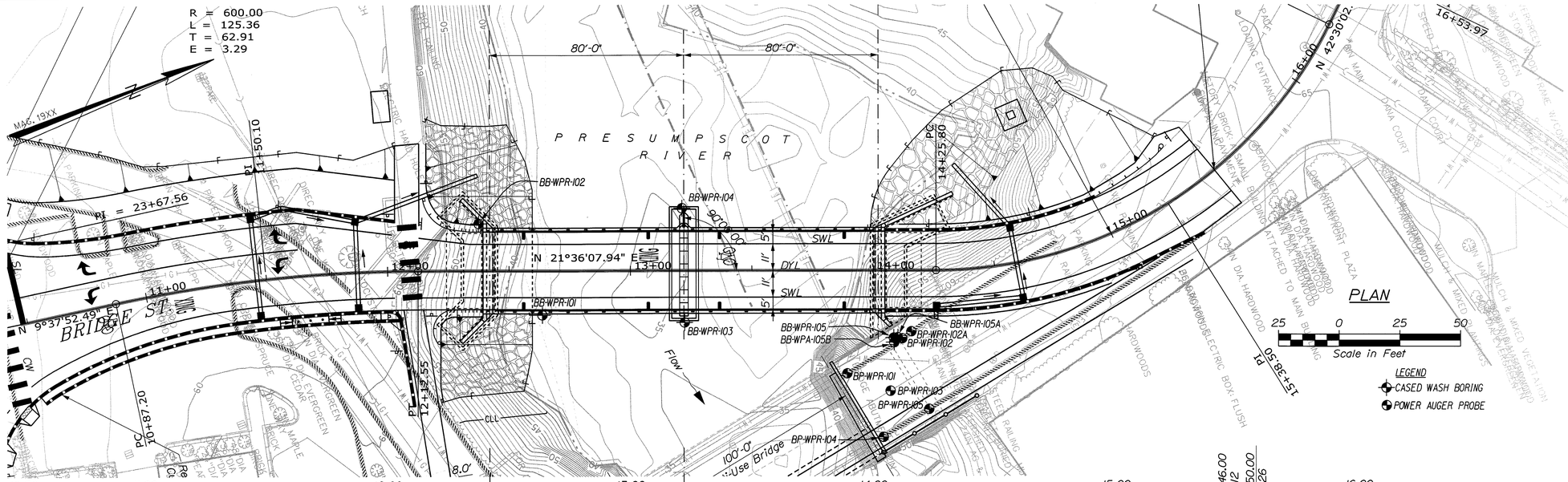

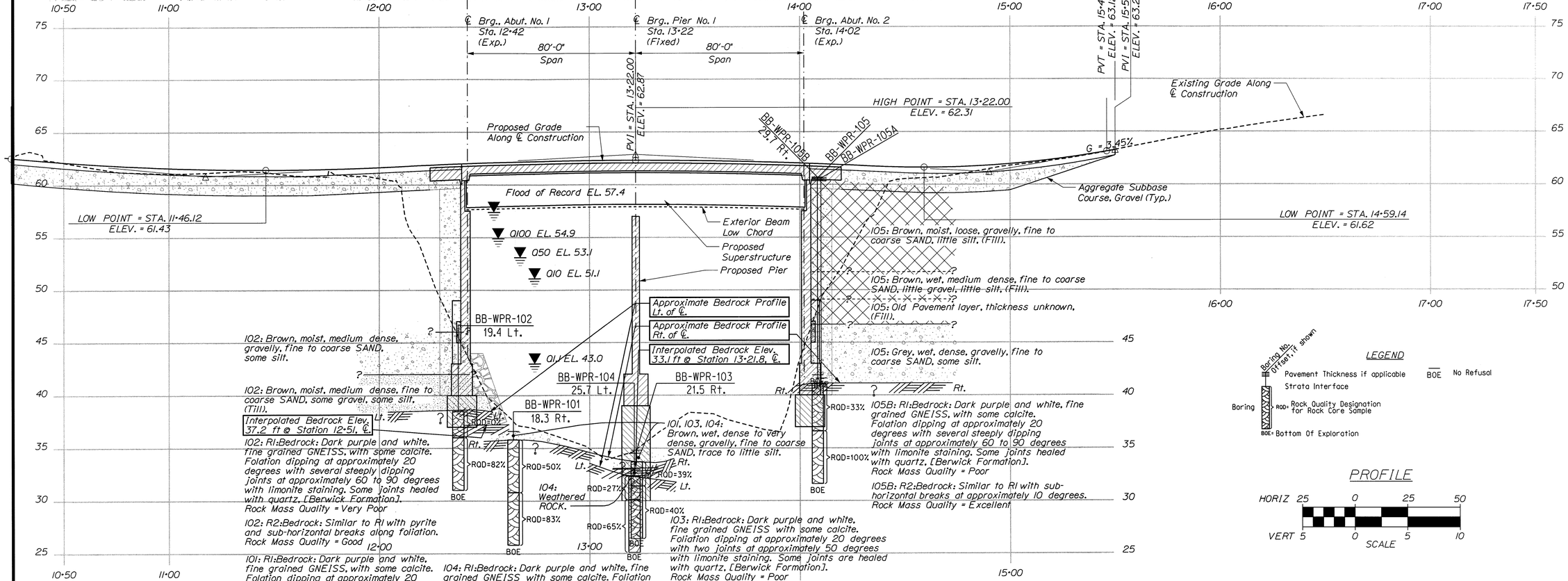

Note: This generalized interpretive soil profile is intended to convey trends in subsurface conditions. The boundaries between strata are approximate and idealized, and have been developed by interpretations of widely spaced explorations and samples. Actual soil transitions may vary and are probably more erratic. For more specific information refer to the exploration logs.

STATE OF MAINE
DEPARTMENT OF TRANSPORTATION

BR-1928(200)X

WIN 19282.00

BRIDGE NO. 5661

BRIDGE PLANS

STATE OF MAINE ★ Kathleen Maguire 7120 ★ LICENSED PROFESSIONAL ENGINEER

SIGNATURE 7120

P.E. NUMBER

12/16/2013

DATE

	BY	DATE
PROJ. MANAGER		
DESIGN-DETAILED		
CHECKED-REVIEWED		
DESIGN2-DETAILED2	K.MAGUIRE	MAR. 2013
DESIGN3-DETAILED3	T. WHITE	MAR. 2013
REVISIONS 1		
REVISIONS 2		
REVISIONS 3		
REVISIONS 4		
FIELD CHANGES		

BRIDGE STREET BRIDGE
PRESUMPSCOT RIVER
WESTBROOK CUMBERLAND COUNTY

BORING LOCATION PLAN & INTERPRETIVE SUBSURFACE PROFILE

SHEET NUMBER

8

OF 74

Filename: ...\GEOTECH\MSTA\008_BLP&ISP1.dgn Division: GEOTECH Username: kate.maguire Date:10/16/2013

Filename: ...\MSTA\009_BORING LOGS1.dgn   Division: GEOTECH   Username: kate.maguire   Date:10/16/2013

1

Maine Department of Transportation
Soil/Rock Exploration Log
US CUSTOMARY UNITS

Project: Bridge Street Bridge #5661 carries Bridge Street over
Location: Westbrook, Maine

Boring No.: BB-WPR-102
WIN: 19282.00

Driller:	Northern Test Boring	Elevation (ft.)	46.0	Auger ID/OD:	5" Solid Stem
Operator:	Mike/Adam	Datum:	NAVD 88	Sampler:	Standard Split Spoon
Logged By:	B. Wilder	Rig Type:	Diedrich D-50 Track	Hammer Wt./Fall:	140#/30"
Date Start/Finish:	9/18/2012; 07:00-15:30	Drilling Method:	Cased Wash Boring	Core Barrel:	NQ-2"
Boring Location:	12+37.5, 19.4 ft Lt.	Casing ID/OD:	HW	Water Level*:	7.0 ft bgs.
Hammer Efficiency Factor: 0.707		Hammer Type:	Automatic ☒ Hydraulic ☐	Rope & Cathead ☐	

Definitions:
D = Split Spoon Sample
MD = Unsuccessful Split Spoon Sample attempt
U = Thin Wall Tube Sample
MU = Unsuccessful Thin Wall Tube Sample attempt
V = Insitu Vane Shear Test, PP = Pocket Penetrometer
MV = Unsuccessful Insitu Vane Shear Test attempt
R = Rock Core Sample
SSA = Solid Stem Auger
HSA = Hollow Stem Auger
RC = Roller Cone
WOH = weight of 140lb. hammer
WOR/C = weight of rods or casing
WO1P = Weight of one person
S_u = Insitu Field Vane Shear Strength (psf)
T_v = Pocket Torvane Shear Strength (psf)
q_p = Unconfined Compressive Strength (ksf)
N-uncorrected = Raw field SPT N-value
Hammer Efficiency Factor = Annual Calibration Value
N_{60} = SPT N-uncorrected corrected for hammer efficiency
N_{60} = (Hammer Efficiency Factor/60%)*N-uncorrected
$S_{u(lab)}$ = Lab Vane Shear Strength (psf)
WC = water content, percent
LL = Liquid Limit
PL = Plastic Limit
PI = Plasticity Index
G = Grain Size Analysis
C = Consolidation Test

Depth (ft.)	Sample No.	Pen./Rec. (in.)	Sample Depth (ft.)	Blows (/6 in.) Shear Strength (psf) or RQD (%)	N-uncorrected	N_{60}	Casing Blows	Elevation (ft.)	Visual Description and Remarks	Laboratory Testing Results/ AASHTO and Unified Class
0	1D	24/13	0.00 - 2.00	3/4/5/5	9	11	SSA		Brown, moist, medium dense, gravelly, fine to coarse SAND, some silt.	
4.00								42.00	Brown, moist, medium dense, fine to coarse SAND, some gravel, some silt, (Till).	
5	2D	24/17	5.00 - 7.00	3/5/6/7	11	13	53			
							118		a50 blows for 0.5 ft.	
7.40	R1	30/30	7.50 - 10.00	RQD = 0%			a50 NQ-2	38.60	Top of Bedrock at Elev. 38.6 ft. R1:Bedrock: Dark purple and white, fine grained GNEISS with some calcite. Foliation dipping at approximately 20 degrees with several steeply dipping joints at approximately 60 to 90 degrees with limonite staining. Some joints are healed with quartz, (Berwick Formation). Rock Mass Quality = Very Poor R1:Core Times (min:sec) 7.5-8.5 ft (2:20) 8.5-9.5 ft (2:30) No water 9.5-10.0 ft (3:30) 100% Recovery Core Blocked	
10	R2	60/58	10.00 - 15.00	RQD = 82%					R2:Bedrock: Similar to R1, with pyrite, and sub-horizontal breaks along the foliation. Rock Mass Quality = Good R2:Core Times (min:sec) 10.0-11.0 ft (2:10) 11.0-12.0 ft (1:45) 12.0-13.0 ft (1:50) 13.0-14.0 ft (2:00) 14.0-15.0 ft (2:30) 97% Recovery	
15.00								31.00	Bottom of Exploration at 15.00 feet below ground surface.	

Remarks:
Auto hammer #149

Stratification lines represent approximate boundaries between soil types; transitions may be gradual.
* Water level readings have been made at times and under conditions stated. Groundwater fluctuations may occur due to conditions other than those present at the time measurements were made.
Page 1 of 1
Boring No.: BB-WPR-102

2

Maine Department of Transportation
Soil/Rock Exploration Log
US CUSTOMARY UNITS

Project: Bridge Street Bridge #5661 carries Bridge Street over
Location: Westbrook, Maine

Boring No.: BB-WPR-101
WIN: 19282.00

Driller:	Northern Test Boring	Elevation (ft.)	36.6	Auger ID/OD:	N/A
Operator:	Mike/Adam	Datum:	NAVD 88	Sampler:	Standard Split Spoon
Logged By:	B. Wilder	Rig Type:	Diedrich D-50 Track	Hammer Wt./Fall:	140#/30"
Date Start/Finish:	9/20/2012; 10:00-12:00	Drilling Method:	Cased Wash Boring	Core Barrel:	NQ-2"
Boring Location:	12+63.7, 18.3 ft Rt.	Casing ID/OD:	HW	Water Level*:	Water Boring
Hammer Efficiency Factor: 0.707		Hammer Type:	Automatic ☒ Hydraulic ☐	Rope & Cathead ☐	

Definitions: D = Split Spoon Sample; MD = Unsuccessful Split Spoon Sample attempt; U = Thin Wall Tube Sample; MU = Unsuccessful Thin Wall Tube Sample attempt; V = Insitu Vane Shear Test, PP = Pocket Penetrometer; MV = Unsuccessful Insitu Vane Shear Test attempt; R = Rock Core Sample; SSA = Solid Stem Auger; HSA = Hollow Stem Auger; RC = Roller Cone; WOH = weight of 140lb. hammer; WOR/C = weight of rods or casing; WO1P = Weight of one person; S_u = Insitu Field Vane Shear Strength (psf); T_v = Pocket Torvane Shear Strength (psf); q_p = Unconfined Compressive Strength (ksf); N-uncorrected = Raw field SPT N-value; Hammer Efficiency Factor = Annual Calibration Value; N_{60} = SPT N-uncorrected corrected for hammer efficiency; N_{60} = (Hammer Efficiency Factor/60%)*N-uncorrected; $S_{u(lab)}$ = Lab Vane Shear Strength (psf); WC = water content, percent; LL = Liquid Limit; PL = Plastic Limit; PI = Plasticity Index; G = Grain Size Analysis; C = Consolidation Test

Depth (ft.)	Sample No.	Pen./Rec. (in.)	Sample Depth (ft.)	Blows (/6 in.) Shear Strength (psf) or RQD (%)	N-uncorrected	N_{60}	Casing Blows	Elevation (ft.)	Visual Description and Remarks	Laboratory Testing Results/ AASHTO and Unified Class
0	1D R1	9.6/5 60	0.00 - 0.80 0.80 - 5.80	7/40(3.6") RQD = 50%	---		a56 R1 NQ-2	35.80	a56 blows for 0.8 ft. Brown, wet, very dense, gravelly, fine to coarse SAND, trace silt. Weathered Rock in Spoon tip.	
0.80									Top of Bedrock at Elev. 35.8 ft. R1:Bedrock: Dark purple and white, fine grained GNEISS with some calcite. Foliation dipping at approximately 20 degrees with one sub-vertical joint at approximately 80 degrees with limonite staining. Some joints are healed with quartz, (Berwick Formation). Rock Mass Quality = Poor R1:Core Times (min:sec) 0.8-1.8 ft (2:30) 1.8-2.8 ft (2:20) 2.8-3.8 ft (2:00) 3.8-4.8 ft (1:50) 4.58-5.8 ft (2:30) 100% Recovery	
5	R2	60/60	5.80 - 10.80	RQD = 83%					R2:Bedrock: Similar to R1 with two joints at approximately 50 degrees, remaining joints are sub-horizontal following foliation. Rock Mass Quality = Good R2:Core Times (min:sec) 5.8-6.8 ft (2:20) 6.8-7.8 ft (2:00) 7.8-8.8 ft (1:45) 8.8-9.8 ft (1:45) 9.58-10.8 ft (1:50) 100% Recovery	
10.80								25.80	Bottom of Exploration at 10.80 feet below ground surface.	

Remarks:
Auto hammer #149

Stratification lines represent approximate boundaries between soil types; transitions may be gradual.
* Water level readings have been made at times and under conditions stated. Groundwater fluctuations may occur due to conditions other than those present at the time measurements were made.
Page 1 of 1
Boring No.: BB-WPR-101

3

Maine Department of Transportation
Soil/Rock Exploration Log
US CUSTOMARY UNITS

Project: Bridge Street Bridge #5661 carries Bridge Street over
Location: Westbrook, Maine

Boring No.: BB-WPR-104
WIN: 19282.00

Driller:	Northern Test Boring	Elevation (ft.)	34.5	Auger ID/OD:	N/A
Operator:	Mike/Adam	Datum:	NAVD 88	Sampler:	Standard Split Spoon
Logged By:	B. Wilder	Rig Type:	Diedrich D-50 Track	Hammer Wt./Fall:	140#/30"
Date Start/Finish:	9/20/2012; 14:30-17:00	Drilling Method:	Cased Wash Boring	Core Barrel:	NQ-2"
Boring Location:	13+21.2, 25.7 ft Lt.	Casing ID/OD:	HW	Water Level*:	Water Boring
Hammer Efficiency Factor: 0.707		Hammer Type:	Automatic ☒ Hydraulic ☐	Rope & Cathead ☐	

Definitions: D = Split Spoon Sample; MD = Unsuccessful Split Spoon Sample attempt; U = Thin Wall Tube Sample; MU = Unsuccessful Thin Wall Tube Sample attempt; V = Insitu Vane Shear Test, PP = Pocket Penetrometer; MV = Unsuccessful Insitu Vane Shear Test attempt; R = Rock Core Sample; SSA = Solid Stem Auger; HSA = Hollow Stem Auger; RC = Roller Cone; WOH = weight of 140lb. hammer; WOR/C = weight of rods or casing; WO1P = Weight of one person; S_u = Insitu Field Vane Shear Strength (psf); T_v = Pocket Torvane Shear Strength (psf); q_p = Unconfined Compressive Strength (ksf); N-uncorrected = Raw field SPT N-value; Hammer Efficiency Factor = Annual Calibration Value; N_{60} = SPT N-uncorrected corrected for hammer efficiency; N_{60} = (Hammer Efficiency Factor/60%)*N-uncorrected; $S_{u(lab)}$ = Lab Vane Shear Strength (psf); WC = water content, percent; LL = Liquid Limit; PL = Plastic Limit; PI = Plasticity Index; G = Grain Size Analysis; C = Consolidation Test

Depth (ft.)	Sample No.	Pen./Rec. (in.)	Sample Depth (ft.)	Blows (/6 in.) Shear Strength (psf) or RQD (%)	N-uncorrected	N_{60}	Casing Blows	Elevation (ft.)	Visual Description and Remarks	Laboratory Testing Results/ AASHTO and Unified Class
0	1D	3/3	0.00 - 0.25	25	---		20		Brown, wet, very dense, gravelly, fine to coarse SAND, little silt. a45 blows for 0.5 ft.	
1.50							a45	33.00	Casing Refusal at 1.5 ft bgs. Weathered ROCK at 1.5 ft bgs. Roller Coned ahead to 2.2 ft bgs.	
2.20	R1	26.4/ 26.4	2.20 - 4.40	RQD = 27%			NQ-2	32.30	Top of Bedrock at Elev. 32.3 ft. R1:Bedrock: Dark purple and white, fine grained GNEISS with some calcite. Foliation dipping at approximately 20 degrees with several steeply dipping joints at approximately 60 degrees with limonite staining. Some joints are healed with quartz, (Berwick Formation). Rock Mass Quality = Poor R1:Core Times (min:sec) 2.2-3.2 ft (3:00) 3.2-4.2 ft (2:45) 4.2-4.4 ft (2:00) 100% Recovery Core Blocked	
	R2	60/60	4.40 - 9.40	RQD = 65%					R2:Bedrock: Similar to R1 with steeply dipping joints at 70 to 90 degrees and at 0 to 20 degrees. Rock Mass Quality = Fair R2:Core Times (min:sec) 4.4-5.4 ft (2:40) 5.4-6.4 ft (2:00) 6.4-7.4 ft (2:00) 7.4-8.4 ft (1:50) 8.4-9.4 ft (2:10) 100% Recovery	
9.40								25.10	Bottom of Exploration at 9.40 feet below ground surface.	

Remarks:
Auto hammer #149

Stratification lines represent approximate boundaries between soil types; transitions may be gradual.
* Water level readings have been made at times and under conditions stated. Groundwater fluctuations may occur due to conditions other than those present at the time measurements were made.
Page 1 of 1
Boring No.: BB-WPR-104

6

Maine Department of Transportation
Soil/Rock Exploration Log
US CUSTOMARY UNITS

Project: Bridge Street Bridge #5661 carries Bridge Street over
Location: Westbrook, Maine

Boring No.: BB-WPR-105B
WIN: 19282.00

Driller:	Northern Test Boring	Elevation (ft.)	60.7	Auger ID/OD:	5" Solid Stem
Operator:	Mike/Adam	Datum:	NAVD 88	Sampler:	Standard Split Spoon
Logged By:	B. Wilder	Rig Type:	Diedrich D-50	Hammer Wt./Fall:	140#/30"
Date Start/Finish:	10/2/2012; 18:45-22:00	Drilling Method:	Cased Wash Boring	Core Barrel:	NQ-2"
Boring Location:	14+08.5, 29.7 ft Rt.	Casing ID/OD:	NW	Water Level*:	None Observed
Hammer Efficiency Factor: 0.768		Hammer Type:	Automatic ☒ Hydraulic ☐	Rope & Cathead ☐	

Definitions: D = Split Spoon Sample; MD = Unsuccessful Split Spoon Sample attempt; U = Thin Wall Tube Sample; MU = Unsuccessful Thin Wall Tube Sample attempt; V = Insitu Vane Shear Test, PP = Pocket Penetrometer; MV = Unsuccessful Insitu Vane Shear Test attempt; R = Rock Core Sample; SSA = Solid Stem Auger; HSA = Hollow Stem Auger; RC = Roller Cone; WOH = weight of 140lb. hammer; WOR/C = weight of rods or casing; WO1P = Weight of one person; S_u = Insitu Field Vane Shear Strength (psf); T_v = Pocket Torvane Shear Strength (psf); q_p = Unconfined Compressive Strength (ksf); N-uncorrected = Raw field SPT N-value; Hammer Efficiency Factor = Annual Calibration Value; N_{60} = SPT N-uncorrected corrected for hammer efficiency; N_{60} = (Hammer Efficiency Factor/60%)*N-uncorrected; $S_{u(lab)}$ = Lab Vane Shear Strength (psf); WC = water content, percent; LL = Liquid Limit; PL = Plastic Limit; PI = Plasticity Index; G = Grain Size Analysis; C = Consolidation Test

Depth (ft.)	Sample No.	Pen./Rec. (in.)	Sample Depth (ft.)	Blows (/6 in.) Shear Strength (psf) or RQD (%)	N-uncorrected	N_{60}	Casing Blows	Elevation (ft.)	Visual Description and Remarks	Laboratory Testing Results/ AASHTO and Unified Class
0							SSA	60.45	3" Pavement on sidewalk.	
0.25									Soils similar to BB-WPR-105.	
							6			
							9			
							12			
							13			
10							18			
							13			
							21			
							48			
							37			
14.00								46.70	Soils similar to BB-WPR-105.	
15							28			
							29			
							28			
							26			
							26			
19.60	1D R1	7.2/3 54/54	19.00 - 19.60 19.60 - 24.10	6/25(1.2") RQD = 33%	---		NQ-2	41.10	Top of Bedrock at Elev. 41.1 ft. R1:Bedrock: Dark purple and white, fine grained GNEISS with some calcite. Foliation dipping at approximately 20 degrees with several steeply dipping joints at approximately 60 to 90 degrees with limonite staining. Some joints are healed with quartz, (Berwick Formation). Rock Mass Quality = Poor R1:Core Times (min:sec) 20.6-21.6 ft (3:23) 21.6-22.6 ft (2:28) 22.6-23.6 ft (2:22) 23.6-24.1 ft (3:00) 100% Recovery Core Blocked	
25	R2	60/57	24.10 - 29.10	RQD = 100%					R2:Bedrock: Similar to R1 with sub-horizontal breaks at approximately 10 degrees. Rock Mass Quality = Excellent R2:Core Times (min:sec) 24.1-25.1 ft (3:10) 25.1-26.1 ft (3:00) 26.1-27.1 ft (2:45) 27.1-28.1 ft (2:40) 28.1-29.1 ft (3:00) 95% Recovery	
29.10								31.60	Bottom of Exploration at 29.10 feet below ground surface.	

Remarks:
Auto hammer #283

Stratification lines represent approximate boundaries between soil types; transitions may be gradual.
* Water level readings have been made at times and under conditions stated. Groundwater fluctuations may occur due to conditions other than those present at the time measurements were made.
Page 1 of 1
Boring No.: BB-WPR-105B

4

Maine Department of Transportation
Soil/Rock Exploration Log
US CUSTOMARY UNITS

Project: Bridge Street Bridge #5661 carries Bridge Street over
Location: Westbrook, Maine

Boring No.: BB-WPR-103
WIN: 19282.00

Driller:	Northern Test Boring	Elevation (ft.)	34.8	Auger ID/OD:	N/A
Operator:	Mike/Adam	Datum:	NAVD 88	Sampler:	Standard Split Spoon
Logged By:	B. Wilder	Rig Type:	Diedrich D-50 Track	Hammer Wt./Fall:	140#/30"
Date Start/Finish:	9/20/2012; 12:00-14:30	Drilling Method:	Cased Wash Boring	Core Barrel:	NQ-2"
Boring Location:	13+22.3, 21.5 ft Rt.	Casing ID/OD:	HW	Water Level*:	Water Boring
Hammer Efficiency Factor: 0.707		Hammer Type:	Automatic ☒ Hydraulic ☐	Rope & Cathead ☐	

Definitions: D = Split Spoon Sample; MD = Unsuccessful Split Spoon Sample attempt; U = Thin Wall Tube Sample; MU = Unsuccessful Thin Wall Tube Sample attempt; V = Insitu Vane Shear Test, PP = Pocket Penetrometer; MV = Unsuccessful Insitu Vane Shear Test attempt; R = Rock Core Sample; SSA = Solid Stem Auger; HSA = Hollow Stem Auger; RC = Roller Cone; WOH = weight of 140lb. hammer; WOR/C = weight of rods or casing; WO1P = Weight of one person; S_u = Insitu Field Vane Shear Strength (psf); T_v = Pocket Torvane Shear Strength (psf); q_p = Unconfined Compressive Strength (ksf); N-uncorrected = Raw field SPT N-value; Hammer Efficiency Factor = Annual Calibration Value; N_{60} = SPT N-uncorrected corrected for hammer efficiency; N_{60} = (Hammer Efficiency Factor/60%)*N-uncorrected; $S_{u(lab)}$ = Lab Vane Shear Strength (psf); WC = water content, percent; LL = Liquid Limit; PL = Plastic Limit; PI = Plasticity Index; G = Grain Size Analysis; C = Consolidation Test

Depth (ft.)	Sample No.	Pen./Rec. (in.)	Sample Depth (ft.)	Blows (/6 in.) Shear Strength (psf) or RQD (%)	N-uncorrected	N_{60}	Casing Blows	Elevation (ft.)	Visual Description and Remarks	Laboratory Testing Results/ AASHTO and Unified Class
0	1D	13.2/10	0.00 - 1.10	7/8/20(1.2")	---		31		Brown, wet, dense, gravelly, fine to coarse SAND, trace silt, bricks. a40 blows for 0.1 ft.	
1.10	R1	27.6/25	1.10 - 3.40	RQD = 39%			a40 NQ-2	33.70	Top of Bedrock at Elev. 33.7 ft. R1:Bedrock: Dark purple and white, fine grained GNEISS with some calcite. Foliation dipping at approximately 20 degrees with two joints at approximately 50 degrees with limonite staining. Some joints are healed with quartz, (Berwick Formation). Rock Mass Quality = Poor R1:Core Times (min:sec) 1.1-2.1 ft (1:45) 2.1-3.1 ft (2:40) 3.1-3.4 ft (3:00) 86% Recovery Core Blocked	
	R2	60/50	3.40 - 8.40	RQD = 40%					R2:Bedrock: Similar to R1 with one steeply dipping joint at approximately 80 degrees, breaks are sub-horizontal at approximately 0 to 10 degrees along the foliation. Rock Mass Quality = Poor R2:Core Times (min:sec) 3.4-4.4 ft (2:15) 4.4-5.4 ft (1:35) 5.4-6.4 ft (2:00) 6.4-7.4 ft (2:50) 7.4-8.4 ft (2:30) 83% Recovery Left 10" of core in bottom of hole.	
8.40								26.40	Bottom of Exploration at 8.40 feet below ground surface.	

Remarks:
Auto hammer #149

Stratification lines represent approximate boundaries between soil types; transitions may be gradual.
* Water level readings have been made at times and under conditions stated. Groundwater fluctuations may occur due to conditions other than those present at the time measurements were made.
Page 1 of 1
Boring No.: BB-WPR-103

5

Maine Department of Transportation
Soil/Rock Exploration Log
US CUSTOMARY UNITS

Project: Bridge Street Bridge #5661 carries Bridge Street over
Location: Westbrook, Maine

Boring No.: BB-WPR-105
WIN: 19282.00

Driller:	Northern Test Boring	Elevation (ft.)	60.6	Auger ID/OD:	5" Solid Stem
Operator:	Mike/Adam	Datum:	NAVD 88	Sampler:	Standard Split Spoon
Logged By:	B. Wilder	Rig Type:	Diedrich D-50	Hammer Wt./Fall:	140#/30"
Date Start/Finish:	9/30/2012; 18:30-19:30	Drilling Method:	Cased Wash Boring	Core Barrel:	N/A
Boring Location:	14+08.4, 27.8 ft Rt.	Casing ID/OD:	HW	Water Level*:	None Observed
Hammer Efficiency Factor: 0.768		Hammer Type:	Automatic ☒ Hydraulic ☐	Rope & Cathead ☐	

Definitions: D = Split Spoon Sample; MD = Unsuccessful Split Spoon Sample attempt; U = Thin Wall Tube Sample; MU = Unsuccessful Thin Wall Tube Sample attempt; V = Insitu Vane Shear Test, PP = Pocket Penetrometer; MV = Unsuccessful Insitu Vane Shear Test attempt; R = Rock Core Sample; SSA = Solid Stem Auger; HSA = Hollow Stem Auger; RC = Roller Cone; WOH = weight of 140lb. hammer; WOR/C = weight of rods or casing; WO1P = Weight of one person; S_u = Insitu Field Vane Shear Strength (psf); T_v = Pocket Torvane Shear Strength (psf); q_p = Unconfined Compressive Strength (ksf); N-uncorrected = Raw field SPT N-value; Hammer Efficiency Factor = Annual Calibration Value; N_{60} = SPT N-uncorrected corrected for hammer efficiency; N_{60} = (Hammer Efficiency Factor/60%)*N-uncorrected; $S_{u(lab)}$ = Lab Vane Shear Strength (psf); WC = water content, percent; LL = Liquid Limit; PL = Plastic Limit; PI = Plasticity Index; G = Grain Size Analysis; C = Consolidation Test

Depth (ft.)	Sample No.	Pen./Rec. (in.)	Sample Depth (ft.)	Blows (/6 in.) Shear Strength (psf) or RQD (%)	N-uncorrected	N_{60}	Casing Blows	Elevation (ft.)	Visual Description and Remarks	Laboratory Testing Results/ AASHTO and Unified Class
0							SSA	60.35	3" PAVEMENT, on sidewalk.	
0.25	S1		1.00 - 4.00						Brown, moist, gravelly, fine to coarse SAND, little silt, (Fill).	
5	1D	24/15	5.00 - 7.00	2/2/2/7	4	5			Brown, moist, loose, gravelly, fine to coarse SAND, little silt, (Fill).	
9.00								51.60	2D (10.0-11.6 ft) Brown, wet, medium dense, fine to coarse SAND, little gravel, little silt, (Fill).	
10	2D/A	24/16	10.00 - 12.00	4/4/9/7	13	17	27			
11.60							41	49.00	2D/A (11.6-12.0 ft) Old Pavement layer, thickness unknown, (Fill).	
							52			
							46			
14.00							63	46.60	Grey, wet, dense, gravelly, fine to coarse SAND, some silt.	
15	3D	24/13	15.00 - 17.00	10/14/10/8	24	31	97			
							38			
							97			
							169			
18.70								41.90	Bottom of Exploration at 18.70 feet below ground surface. Broke Casing at 18.7 ft bgs. left 5.0 ft of casing in bottom of boring, moved to BB-WPR-105A.	

Remarks:
Auto hammer #283

Stratification lines represent approximate boundaries between soil types; transitions may be gradual.
* Water level readings have been made at times and under conditions stated. Groundwater fluctuations may occur due to conditions other than those present at the time measurements were made.
Page 1 of 1
Boring No.: BB-WPR-105

7

Maine Department of Transportation
Soil/Rock Exploration Log
US CUSTOMARY UNITS

Project: Bridge Street Bridge #5661 carries Bridge Street over
Location: Westbrook, Maine

Boring No.: BB-WPR-105A
WIN: 19282.00

Driller:	Northern Test Boring	Elevation (ft.)	60.6	Auger ID/OD:	5" Solid Stem
Operator:	Mike/Adam	Datum:	NAVD 88	Sampler:	Standard Split Spoon
Logged By:	B. Wilder	Rig Type:	Diedrich D-50	Hammer Wt./Fall:	140#/30"
Date Start/Finish:	9/30/2012; 19:30-21:45	Drilling Method:	Cased Wash Boring	Core Barrel:	N/A
Boring Location:	14+10.1, 27.7 ft Rt.	Casing ID/OD:	HW & NW	Water Level*:	None Observed
Hammer Efficiency Factor: 0.768		Hammer Type:	Automatic ☒ Hydraulic ☐	Rope & Cathead ☐	

Definitions: D = Split Spoon Sample; MD = Unsuccessful Split Spoon Sample attempt; U = Thin Wall Tube Sample; MU = Unsuccessful Thin Wall Tube Sample attempt; V = Insitu Vane Shear Test, PP = Pocket Penetrometer; MV = Unsuccessful Insitu Vane Shear Test attempt; R = Rock Core Sample; SSA = Solid Stem Auger; HSA = Hollow Stem Auger; RC = Roller Cone; WOH = weight of 140lb. hammer; WOR/C = weight of rods or casing; WO1P = Weight of one person; S_u = Insitu Field Vane Shear Strength (psf); T_v = Pocket Torvane Shear Strength (psf); q_p = Unconfined Compressive Strength (ksf); N-uncorrected = Raw field SPT N-value; Hammer Efficiency Factor = Annual Calibration Value; N_{60} = SPT N-uncorrected corrected for hammer efficiency; N_{60} = (Hammer Efficiency Factor/60%)*N-uncorrected; $S_{u(lab)}$ = Lab Vane Shear Strength (psf); WC = water content, percent; LL = Liquid Limit; PL = Plastic Limit; PI = Plasticity Index; G = Grain Size Analysis; C = Consolidation Test

Depth (ft.)	Sample No.	Pen./Rec. (in.)	Sample Depth (ft.)	Blows (/6 in.) Shear Strength (psf) or RQD (%)	N-uncorrected	N_{60}	Casing Blows	Elevation (ft.)	Visual Description and Remarks	Laboratory Testing Results/ AASHTO and Unified Class
0							SSA		Augered to 19.0 ft bgs, soils similar to BB-WPR-105.	
14.00								46.60		
							50			
							125			
19.00								41.60	Bottom of Exploration at 19.00 feet below ground surface. REFUSAL, broke HW Casing at 19.0 ft bgs, dropped in NW Casing, would not go back down thru casing, left 10.0 ft of casing in boring, moved to BB-WPR-105B.	

Remarks:
Auto hammer #283

Stratification lines represent approximate boundaries between soil types; transitions may be gradual.
* Water level readings have been made at times and under conditions stated. Groundwater fluctuations may occur due to conditions other than those present at the time measurements were made.
Page 1 of 1
Boring No.: BB-WPR-105A

State of Maine - Department of Transportation
Power Auger Probe Summary Sheet

Town(s): Westbrook **Work Number: 19282.00**

Station (Feet)	Offset (Feet)	Weathered Rock (Feet)	Refusal (Feet)	No Refusal (Feet)	Water Depth (Ft.)	Comments / Date
13+89	42.5 Rt.			20.5		BP-WPR-101
14+04	68.6 Rt.		14.8			BP-WPR-104
						hard drilling from 10.5-14.8 ft.
14+07	49.6 Rt.		8.4			BP-WPR-103
14+12	28.1 Rt.		4.3			BP-WPR-102
14+16	25.2 Rt.		4.1			BP-WPR-102A
14+23	57.1 Rt.		21.0			BP-WPR-105

STATE OF MAINE
DEPARTMENT OF TRANSPORTATION
BR-1928(200)X
WIN 19282.00
BRIDGE PLANS
BRIDGE NO. 5661

STATE OF MAINE Kathleen Maguire 7120 LICENSED PROFESSIONAL ENGINEER

SIGNATURE
7120
P.E. NUMBER
10/16/2013
DATE

	BY	DATE
PROJ. MANAGER		
DESIGN-DETAILED		
CHECKED-REVIEWED		
DESIGN2-DETAILED2	K.MAGUIRE	
DESIGN3-DETAILED3	T.WHITE	MAR 2013
REVISIONS 1		
REVISIONS 2		
REVISIONS 3		
REVISIONS 4		
FIELD CHANGES		

WESTBROOK CUMBERLAND COUNTY
BRIDGE STREET BRIDGE
PRESUMPSCOT RIVER

BORING LOGS

SHEET NUMBER
9
OF 74

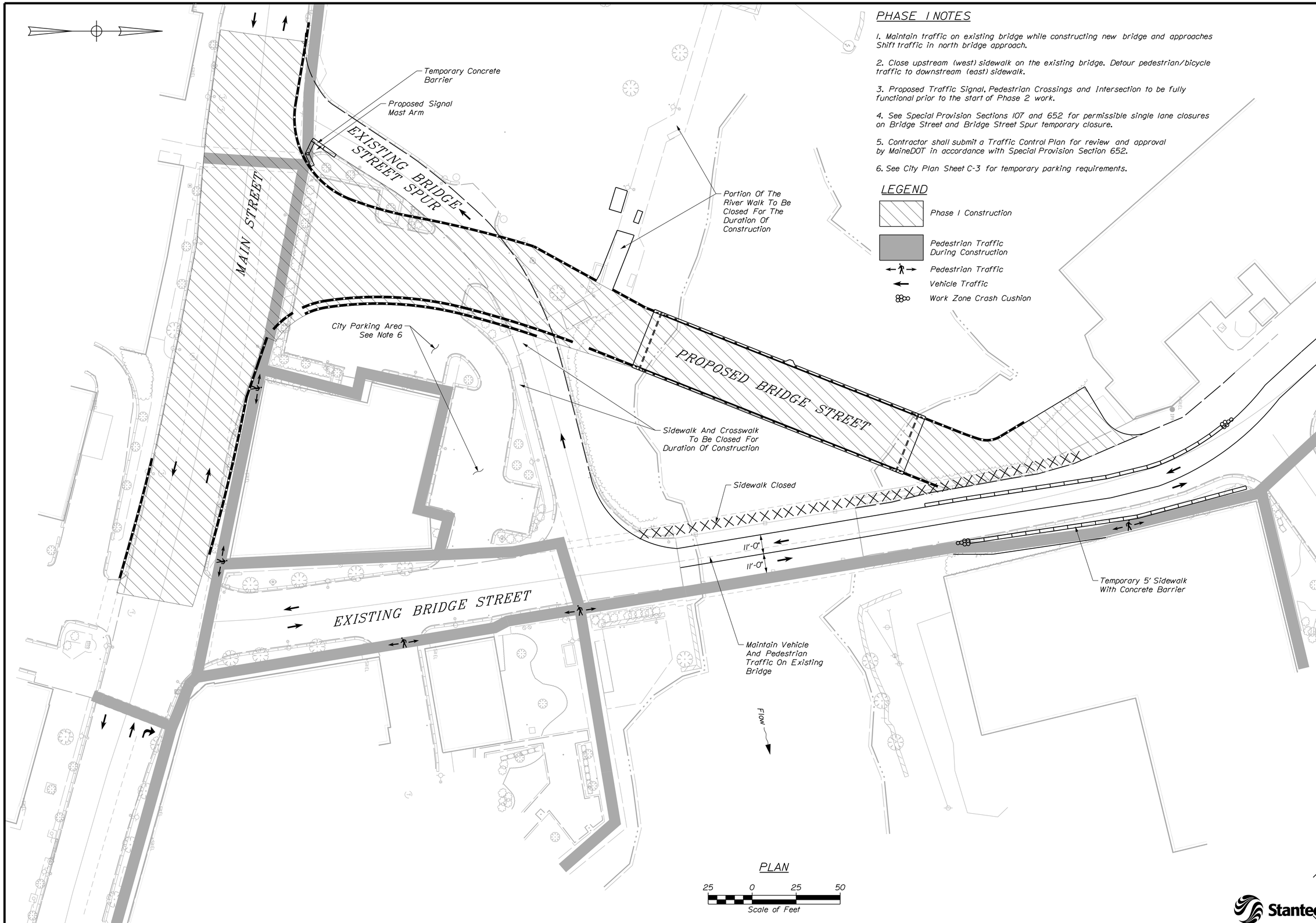

PHASE 1 NOTES

1. Maintain traffic on existing bridge while constructing new bridge and approaches Shift traffic in north bridge approach.

2. Close upstream (west) sidewalk on the existing bridge. Detour pedestrian/bicycle traffic to downstream (east) sidewalk.

3. Proposed Traffic Signal, Pedestrian Crossings and Intersection to be fully functional prior to the start of Phase 2 work.

4. See Special Provision Sections 107 and 652 for permissible single lane closures on Bridge Street and Bridge Street Spur temporary closure.

5. Contractor shall submit a Traffic Control Plan for review and approval by MaineDOT in accordance with Special Provision Section 652.

6. See City Plan Sheet C-3 for temporary parking requirements.

LEGEND

- Phase 1 Construction
- Pedestrian Traffic During Construction
- Pedestrian Traffic
- Vehicle Traffic
- Work Zone Crash Cushion

PLAN

STATE OF MAINE
DEPARTMENT OF TRANSPORTATION

STP-1928(200)

WIN 19282.00

BRIDGE NO. 5661

BRIDGE PLANS

PROJ. MANAGER	NATE BENOIT		
DESIGN-DETAILED	TWM	DDT	SEPT 2014
CHECKED-REVIEWED	TWM	TPL	SEPT 2014
DESIGN2-DETAILED2			
DESIGN3-DETAILED3			
REVISIONS 1			
REVISIONS 2			
REVISIONS 3			
REVISIONS 4			
FIELD CHANGES			

P.E. NUMBER

SIGNATURE

DATE

BRIDGE STREET BRIDGE
PRESUMPSCOT RIVER
WESTBROOK CUMBERLAND COUNTY

CONCEPTUAL PHASING PLAN 1

SHEET NUMBER

10

OF 74

Filename: ...\010_Traffic Control\Phase 1.dgn Division: BRIDGE Username: common Date:9/15/2014

PHASE 2 NOTES

1. Shift traffic onto new bridge.

2. Use temporary concrete barrier to allow pedestrian/bicycle crossing on new bridge (temporary Riverwalk access).

3. Construct new multi-Use bridge, Riverwalk trail connection, landscaping, City parking area, sidewalk widening along existing Bridge Street, and additional Main Street parking.

4. Contractor shall submit a Traffic Control Plan for review and approval by MaineDOT in accordance with Special Provision Section 652.

5. See City Plan Sheet C-3 for temporary parking requirements.

LEGEND

- Phase 2 Construction
- Pedestrian Traffic During Construction
- Pedestrian Traffic
- Vehicle Traffic
- Work Zone Crash Cushion

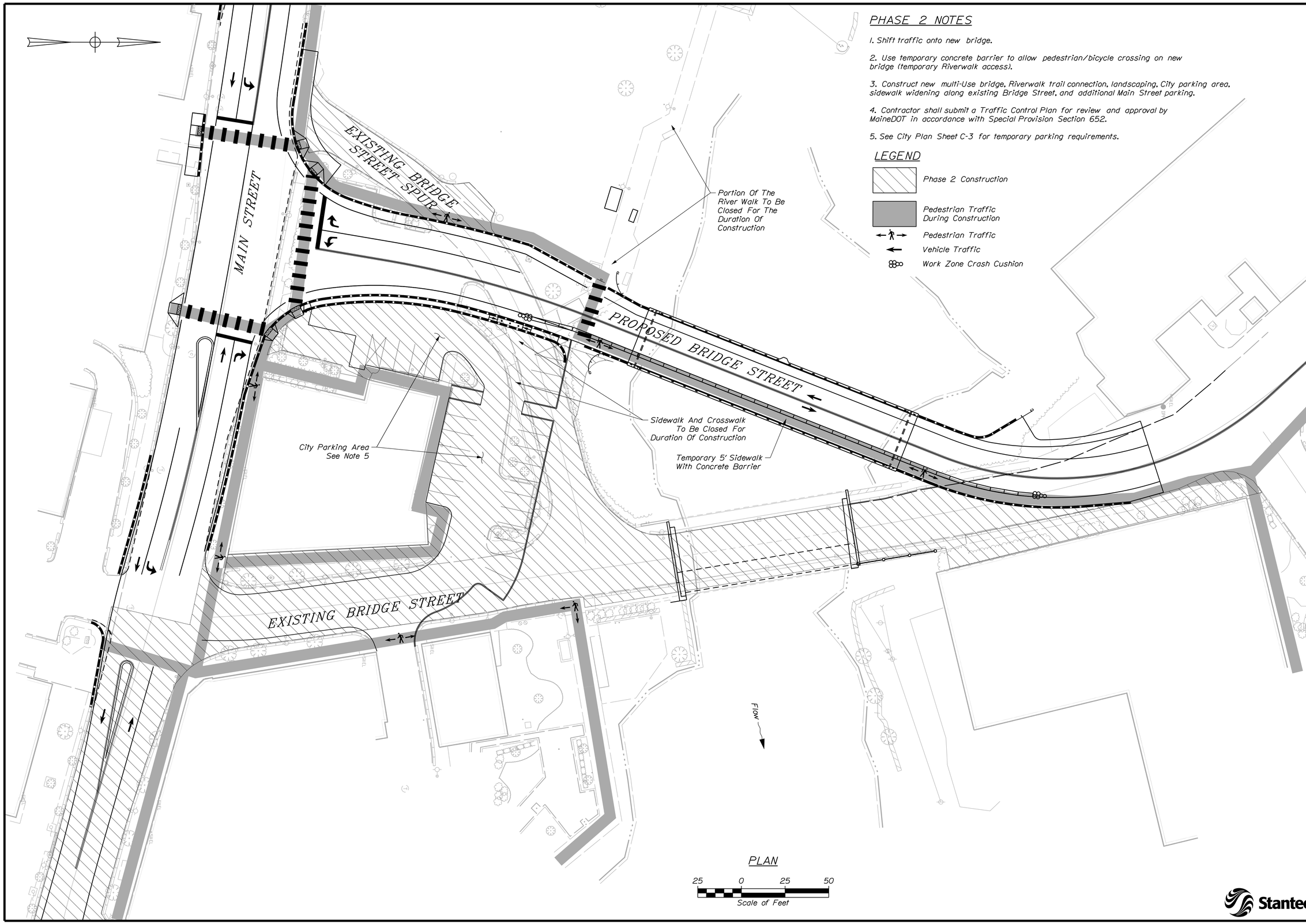

PLAN

25 0 25 50

Scale of Feet

Stantec

STATE OF MAINE
DEPARTMENT OF TRANSPORTATION

STP-1928(200)

WIN 19282.00

BRIDGE NO. 5661

BRIDGE PLANS

		BY	DATE
PROJ. MANAGER	NATE BENOIT		
DESIGN-DETAILED	TWM	DOT	SEPT 2014
CHECKED-REVIEWED	TPL	TPL/TWM	SEPT 2014
DESIGN2-DETAILED2			
DESIGN3-DETAILED3			
REVISIONS 1			
REVISIONS 2			
REVISIONS 3			
REVISIONS 4			
FIELD CHANGES			

SIGNATURE

P.E. NUMBER

DATE

BRIDGE STREET BRIDGE
PRESUMPSCOT RIVER
WESTBROOK CUMBERLAND COUNTY

CONCEPTUAL PHASING PLAN 2

SHEET NUMBER

11

OF 74

Filename: ...\011_Traffic Control Phase 2.dgn Division: BRIDGE Username: common Date:9/19/2014

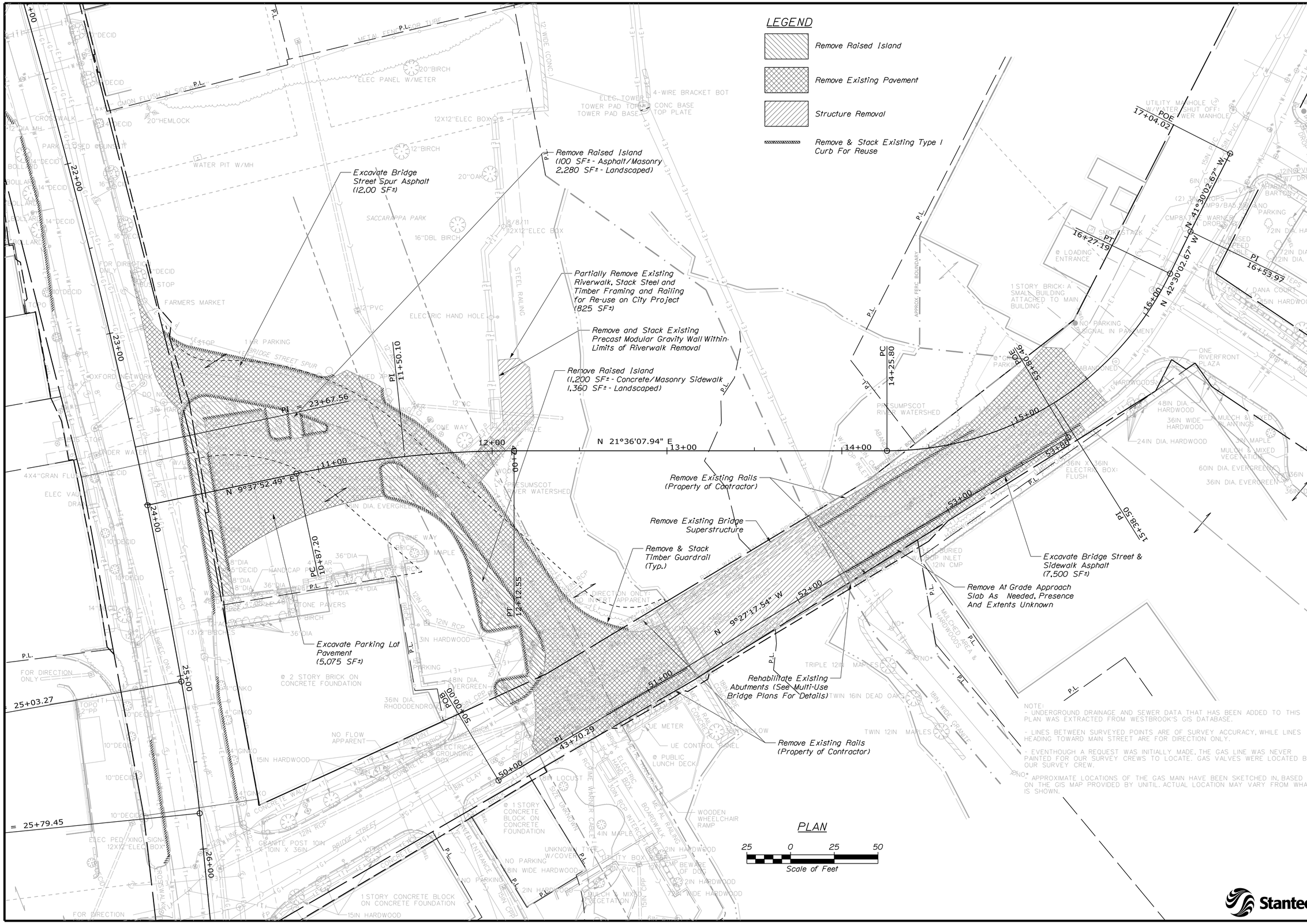

STATE OF MAINE
DEPARTMENT OF TRANSPORTATION

STP-1928(200)

WIN 19282.00

BRIDGE NO. 5661

BRIDGE PLANS

	BY	DATE
PROJ. MANAGER	NATE BENOIT	
DESIGN-DETAILED	DOT	SEPT 2014
CHECKED-REVIEWED	TWM	SEPT 2014
DESIGN2-DETAILED2		
DESIGN3-DETAILED3		
REVISIONS 1		
REVISIONS 2		
REVISIONS 3		
REVISIONS 4		
FIELD CHANGES		

P.E. NUMBER

SIGNATURE

DATE

BRIDGE STREET BRIDGE
PRESUMPSCOT RIVER
WESTBROOK CUMBERLAND COUNTY

PAVEMENT & STRUCTURE DEMOLITION PLAN

SHEET NUMBER

12

OF 74

Filename: ...\BRIDGE\MSTA\012_Plan_Demo.dgn Division: BRIDGE Username: common Date:9/15/2014

DRAINAGE TABLE							
STRUCTURE	LOCATION	TYPE	RIM	INV. IN	INV IN	INV. OUT	COMMENTS
CB-1	11+87.47, 21.44' LT	A1-C	60.83	53.31 (S)	54.09 (E)	53.06	
CB-2	11+87.47, 15.0' RT	A1-C	60.95	-	-	54.40	
MH-1	11+58.47, 28.85' LT	EXISTING	61.36	53.80 (S)	54.11*	53.58	PLUG EXISTING OUTLET PIPE
CB-3	11+46.15, 26.0' LT	A1-C	60.60	54.12	-	53.87	
CB-4	11+46.15, 15.0' RT	A1-C	60.83	-	-	54.50	
CB-5	14+59.19, 15.0' LT	B1-C	61.02	54.39	-	54.14	
CB-6	14+59.19, 15.0' RT	A1-C	61.02	55.18 (S)	55.40 (E)	54.69	
CB-7							NOT USED
CB-8	14+25.00, 15.0' RT	F6-C	61.22	56.0 (CB 8A)	-	55.5	PROVIDE 12" RCP STUB

Curve Data for Alignment # 7:							
Point #	Point Type	Station	Northing	Easting	Radius	Length	Tangent
7.1	POB	0+00.0	307855.1333	986283.6800			
7.2	PC	0+21.1	307874.7141	986291.4322			
	PI	0+27.1	307880.3039	986293.6456	164.00	12.04	6.02
7.3	PCC	0+33.1	307886.0495	986295.4458			
	PI	0+39.8	307892.4980	986297.4663	15.00	12.70	6.76
7.4	PT	0+45.8	307898.2839	986293.9751			
7.5	POE	0+61.8	307911.9832	986285.7089			

Curve Data for Alignment # 5:							
Point #	Point Type	Station	Northing	Easting	Radius	Length	Tangent
5.1	PC	0+00.0	307504.7519	986058.1797			
	PI	0+23.3	307501.1722	986081.2097	3320.29	46.61	23.31
5.2	PRC	0+46.6	307497.2696	986104.1873			
	PI	0+87.6	307490.4050	986144.6041	50.00	68.68	41.00
5.3	PCC	1+15.3	307528.6926	986159.2568			
	PI	1+33.6	307545.7818	986165.7969	200.00	36.49	18.30
5.4	PRC	1+51.8	307563.7740	986169.1273			
	PI	1+87.4	307598.8128	986175.6132	627.00	71.19	35.63
5.5	PT	2+23.0	307632.8911	986186.0272			
5.6	POE	2+63.8	307668.7313	986205.6713			

Curve Data for Alignment # 17:							
Point #	Point Type	Station	Northing	Easting	Radius	Length	Tangent
17.1	POB	0+00.0	307843.3526	986313.4313			
17.2	PC	0+21.1	307862.9247	986321.1813			
	PI	0+66.8	307905.4824	986338.0330	196.00	89.90	45.80
17.3	PT	1+11.0	307951.1019	986334.2922			
17.4	POE	1+37.2	307977.2116	986332.1513			

Geometrics Station & Offsets For Alignment #7				
Point #	Station	Offset	Northing	Easting
7.1	14+04.7	-16.0	307855.1333	986283.6800
7.2	14+25.8	-16.0	307874.7141	986291.4322
7.3	14+37.90	-16.0	307886.0495	986295.4458
7.4	14+51.71	-20.7	307898.2839	986293.9751
7.5	14+65.56	-31.4	307911.9832	986285.7089

Geometrics Station & Offsets For Alignment #5				
Point #	Station	Offset	Northing	Easting
5.1	22+74.7	-21.1	307504.7519	986058.1797
5.2	23+21.1	-20.4	307497.2696	986104.1873
5.3	10+60.3	-30.8	307528.6926	986159.2568
5.4	10+96.2	-27.0	307563.7740	986169.1273
5.5	11+64.3	-27.0	307632.8911	986186.0272
5.6	12+03.4	-20.0	307668.7313	986205.6713

Geometrics Station & Offsets For Alignment #17				
Point #	Station	Offset	Northing	Easting
17.1	14+04.7	16.0	307843.3526	986313.4313
17.2	14+25.8	16.0	307862.9247	986321.1813
17.3	15+08.4	16.0	307951.1019	986334.2922
17.4	15+32.3	17.7	307977.2116	986332.1513

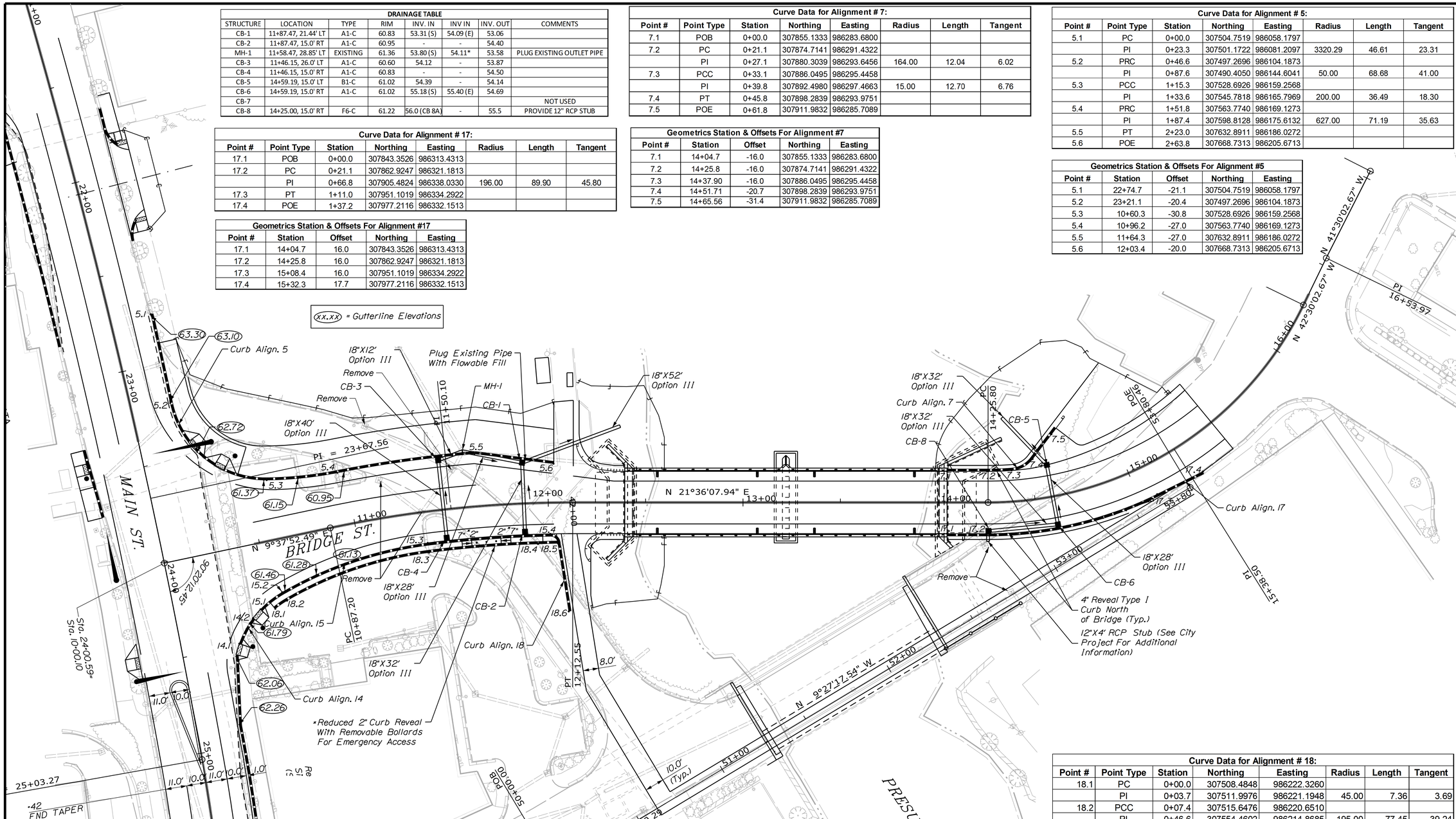

Curve Data for Alignment # 14:							
Point #	Point Type	Station	Northing	Easting	Radius	Length	Tangent
14.1	PC	0+00.0	307484.7437	986232.1277			
	PI	0+07.5	307489.6806	986226.5177	50.00	14.80	7.50
14.2	PT	0+14.8	307496.0421	986222.5964			

Geometrics Station & Offsets For Alignment #14				
Point #	Station	Offset	Northing	Easting
14.1	10+29.2	48.4	307484.7437	986232.1277
14.2	10+38.7	37.1	307496.0421	986222.5964

Curve Data for Alignment # 15:							
Point #	Point Type	Station	Northing	Easting	Radius	Length	Tangent
15.1	PC	0+00.0	307501.3258	986219.7618			
	PI	0+07.2	307507.8279	986216.7609	50.00	14.23	7.16
15.2	PCC	0+14.2	307514.9108	986215.7056			
	PI	0+54.5	307554.7186	986209.7748	200.00	79.43	40.25
15.3	PCC	0+93.7	307593.7218	986219.7036			
	PI	1+26.1	307625.1594	986227.7065	584.00	63.04	32.44
15.4	PT	1+56.7	307653.8581	986238.5199			
	PI				3.72	5.93	

Geometrics Station & Offsets For Alignment #15				
Point #	Station	Offset	Northing	Easting
15.1	10+43.5	33.4	307501.3258	986219.7618
15.2	10+56.2	27.2	307514.9108	986215.7056
15.3	11+35.9	16.0	307593.7218	986219.7036
15.4	12+00.6	16.0	307653.8581	986238.5199

Curve Data for Alignment # 18:							
Point #	Point Type	Station	Northing	Easting	Radius	Length	Tangent
18.1	PC	0+00.0	307508.4848	986222.3260			
	PI	0+03.7	307511.9976	986221.1948	45.00	7.36	3.69
18.2	PCC	0+07.4	307515.6476	986220.6510			
	PI	0+46.6	307554.4602	986214.8685	195.00	77.45	39.24
18.3	PCC	0+84.8	307592.4883	986224.5491			
	PI	1+12.9	307619.7176	986231.4807	579.00	56.15	28.10
18.4	PT	1+41.0	307646.1477	986241.0163			
18.5	PT	1+51.2	307655.7553	986244.4825			
18.6	PT	1+86.6	307648.0803	986279.0515			

Geometrics Station & Offsets for Alignment # 18:				
Point #	Station	Offset	Northing	Easting
18.1	10+50.9	34.7	307508.4848	986222.326
18.2	10+57.7	31.9	307515.6476	986220.651
18.3	11+35.9	21.0	307592.4883	986224.5491
18.4	11+94.0	21.0	307646.1477	986241.0163
18.5	12+04.6	20.9	307655.7553	986244.4825
18.6	42+59.8	6.5	307648.0803	986279.0515

Stantec

STATE OF MAINE
DEPARTMENT OF TRANSPORTATION

STP-1928(200)

WIN 19282.00

BRIDGE PLANS

BRIDGE NO. 5661

	BY	DATE
PROJ. MANAGER	NATE BENOIT	
DESIGN-DETAILED	PZA	SEPT 2014
CHECKED-REVIEWED	TPL	SEPT 2014
DESIGN2-DETAILED2		
DESIGN3-DETAILED3		
REVISIONS 1		
REVISIONS 2		
REVISIONS 3		
REVISIONS 4		
FIELD CHANGES		

P.E. NUMBER

SIGNATURE

DATE

BRIDGE STREET BRIDGE
PRESUMPSCOT RIVER
WESTBROOK CUMBERLAND COUNTY

CURB GEOMETRY & DRAINAGE LAYOUT PLAN 1

SHEET NUMBER
13
OF 74

Filename: ...\013_Bridge St Drainage & Curb geometry.dgn Division: BRIDGE Username: common Date:10/1/2014

Curve Data for Alignment # 1:							
Point #	Point Type	Station	Northing	Easting	Radius	Length	Tangent
1.1	POB	0+00.0	307540.5070	985843.6452			
1.2	PC	0+07.6	307533.1522	985845.3933			
	PI	0+20.5	307520.5405	985848.3910	18.00	22.50	13.00
1.3	PRC	0+30.0	307519.3862	985861.3026			
	PI	0+34.0	307519.0363	985865.2161	3813.00	7.90	3.90
1.4	PRC	0+37.9	307518.6783	985869.1289			
	PI	0+43.9	307518.1310	985875.1124	15.00	11.40	6.00
1.5	PT	0+49.3	307521.8657	985879.8191			
1.6	POE	0+57.3	307526.8108	985886.0511			

Geometrics Station & Offsets For Alignment #1				
Point #	Station	Offset	Northing	Easting
1.1	20+59.0	-32.5	307540.5070	985843.6452
1.2	20+61.4	-25.3	307533.1522	985845.3933
1.3	20+78.3	-13.0	307519.3862	985861.3026
1.4	20+86.1	-13.0	307518.6783	985869.1289
1.5	20+96.5	-17.2	307521.8657	985879.8191
1.6	21+02.2	-22.7	307526.8108	985886.0511

Curve Data for Alignment # 2:							
Point #	Point Type	Station	Northing	Easting	Radius	Length	Tangent
2.1	POB	0+00.0	307518.6776	985949.7667			
2.2	PC	0+10.6	307517.3298	985960.2753			
	PI				15	11.7	6.29
2.3	PT	0+22.3	307520.3363	985971.3357			

Geometrics Station & Offsets For Alignment #2				
Point #	Station	Offset	Northing	Easting
2.1	21+66.0	-21.2	307518.6776	985949.7667
2.2	21+76.5	-21.0	307517.3298	985960.2753
2.3	21+87.1	-25.1	307520.3363	985971.3357

Curve Data for Alignment # 4:							
Point #	Point Type	Station	Northing	Easting	Radius	Length	Tangent
4.1	PC	0+00.0	307515.2742	956009.7139			
	PI				15.00	11.91	6.29
4.2	PT	0+11.9	307509.4741	986019.7595			

Geometrics Station & Offsets For Alignment #4				
Point #	Station	Offset	Northing	Easting
4.1	22+25.5	-24.9	307515.2742	986009.7139
4.2	22+36.2	-20.5	307509.4741	986019.7595

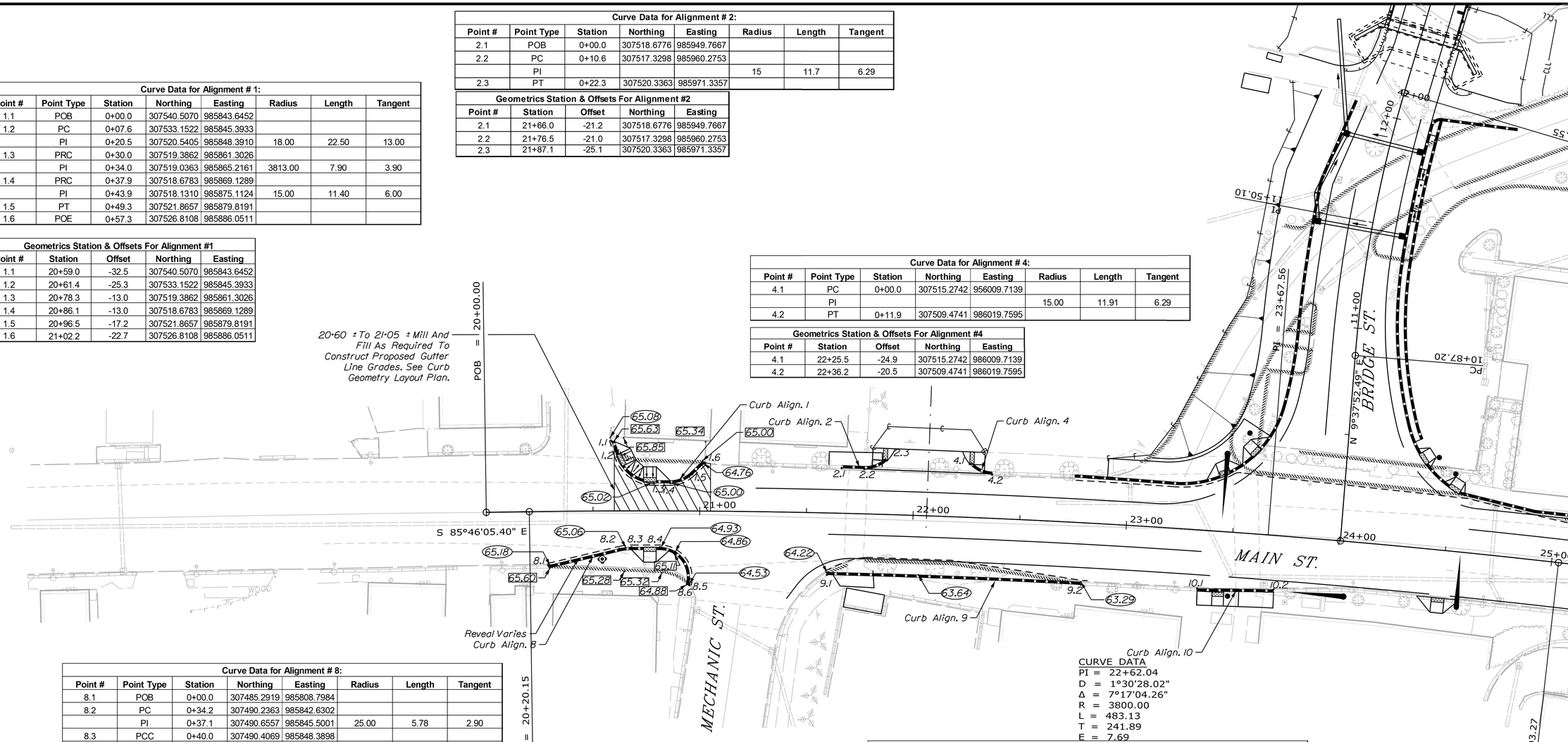

CURVE DATA
PI = 22+62.04
D = 1°30'28.02"
Δ = 7°17'04.26"
R = 3800.00
L = 483.13
T = 241.89
E = 7.69

Curve Data for Alignment # 8:							
Point #	Point Type	Station	Northing	Easting	Radius	Length	Tangent
8.1	POB	0+00.0	307485.2919	985808.7984			
8.2	PC	0+34.2	307490.2363	985842.6302			
	PI	0+37.1	307490.6557	985845.5001	25.00	5.78	2.90
8.3	PCC	0+40.0	307490.4069	985848.3898			
	PI	0+46.6	307489.8344	985855.0399	2379.91	13.35	6.67
8.4	PCC	0+53.3	307489.2246	985861.6868			
	PI	0+68.0	307487.8820	985876.3204	14.00	22.67	14.70
8.5	PT	0+76.0	307473.3305	985874.2709			
8.6	POE	0+79.1	307470.269	985873.8397			

Geometrics Station & Offsets For Alignment #8				
Point #	Station	Offset	Northing	Easting
8.1	20+28.7	25.3	307485.2919	985808.7984
8.2	20+62.2	17.7	307490.2363	985842.6302
8.3	20+68.0	17.0	307490.4069	985848.3898
8.4	20+81.4	17.0	307489.2246	985861.6868
8.5	20+95.5	31.7	307473.3305	985874.2709
8.6	20+95.3	34.8	307470.2690	985873.8397

(xx.xx) = Gutterline Elevations

[xx.xx] = Top Of Curb Or Spot Elevations

At Match To Existing Curb.
Proposed Reveal To Match Existing

Curve Data for Alignment # 9:							
Point #	Point Type	Station	Northing	Easting	Radius	Length	Tangent
9.1	PC	0+00.0	307469.4420	985938.4478			
	PI	0+59.5	307462.8628	985997.6249	3771.00	119.07	59.54
9.2	PT	1+19.1	307454.4186	986056.5649			

Geometrics Station & Offsets For Alignment #9				
Point #	Station	Offset	Northing	Easting
9.1	21+60.2	29.0	307469.4420	985938.4478
9.2	22+80.2	29.0	307454.4186	986056.5649

Curve Data for Alignment # 10:							
Point #	Point Type	Station	Northing	Easting	Radius	Length	Tangent
10.1	POB	0+00.0	307447.8540	986110.7141			
10.2	POE	0+35.8	307444.2206	986146.3247			

Geometrics Station & Offsets For Alignment #10				
Point #	Station	Offset	Northing	Easting
10.1	23+35.1	27.4	307447.8540	986110.7141
10.2	23+71.1	25.3	307444.2206	986146.3247

PLAN

25 0 25 50
Scale of Feet

CURB NOTES

1. The Contractor shall place Type I Curb in concrete fill bedding if needed to ensure proper placement, as directed by the Resident. Payment will be made under Item No. 502.56, Concrete Fill.

Stantec

STATE OF MAINE
DEPARTMENT OF TRANSPORTATION

STP-1928(200)

WIN 19282.00

BRIDGE NO. 5661

BRIDGE PLANS

	BY	DATE
PROJ. MANAGER	MATE BENOIT	
DESIGN-DETAILED	PZA	SEPT 2014
CHECKED-REVIEWED	TPL	SEPT 2014
DESIGN2-DETAILED2		
DESIGN3-DETAILED3		
REVISIONS 1		
REVISIONS 2		
REVISIONS 3		
REVISIONS 4		
FIELD CHANGES		

SIGNATURE

P.E. NUMBER

DATE

BRIDGE STREET BRIDGE
PRESUMPSCOT RIVER
WESTBROOK CUMBERLAND COUNTY

CURB GEOMETRY & DRAINAGE LAYOUT PLAN 2

SHEET NUMBER
14
OF 74

Filename: ...\014_Main St Curb geometry 1.dgn Division: BRIDGE Username: common Date:9/15/2014

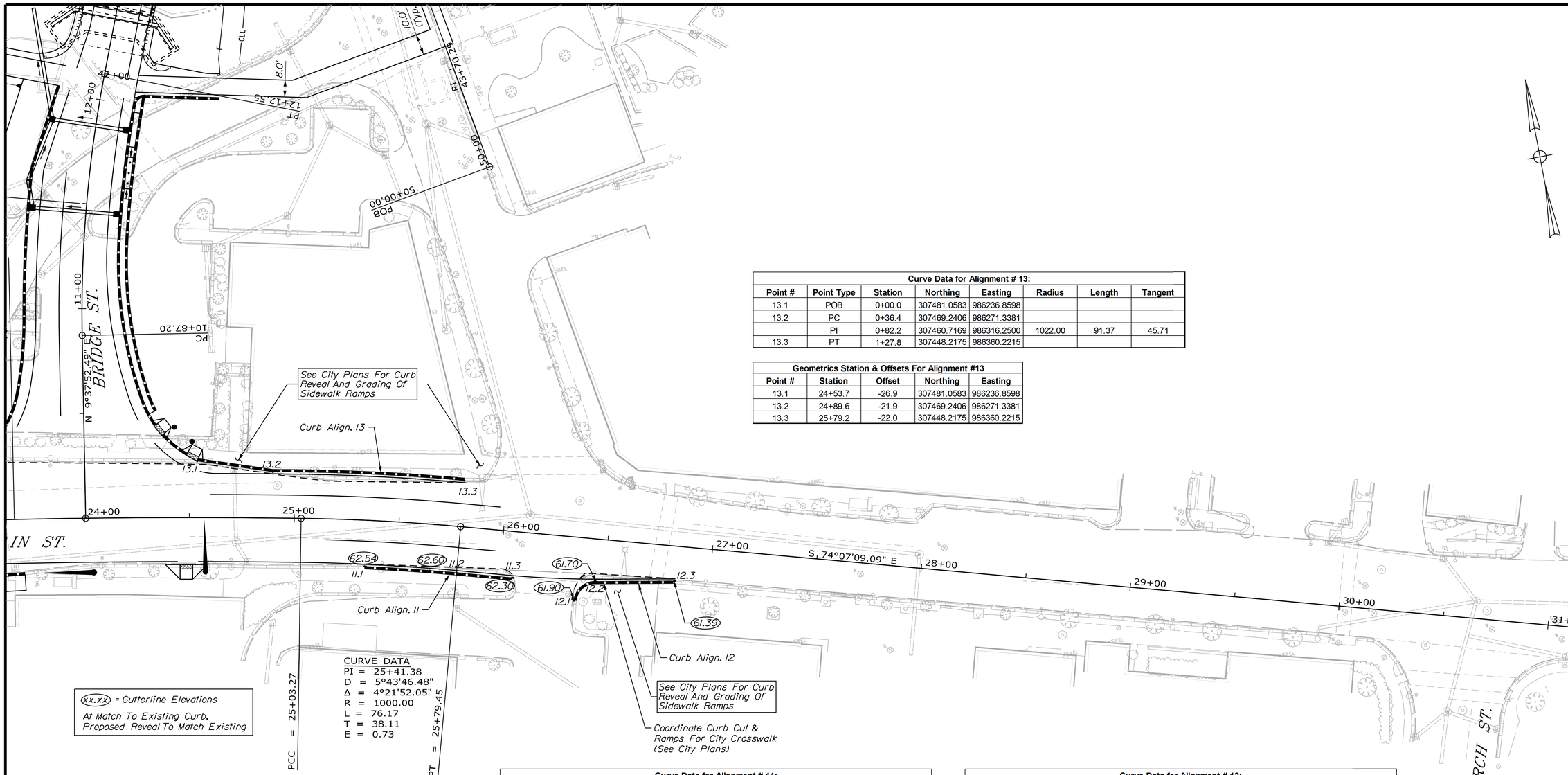

Curve Data for Alignment # 13:							
Point #	Point Type	Station	Northing	Easting	Radius	Length	Tangent
13.1	POB	0+00.0	307481.0583	986236.8598			
13.2	PC	0+36.4	307469.2406	986271.3381			
	PI	0+82.2	307460.7169	986316.2500	1022.00	91.37	45.71
13.3	PT	1+27.8	307448.2175	986360.2215			

Geometrics Station & Offsets For Alignment #13				
Point #	Station	Offset	Northing	Easting
13.1	24+53.7	-26.9	307481.0583	986236.8598
13.2	24+89.6	-21.9	307469.2406	986271.3381
13.3	25+79.2	-22.0	307448.2175	986360.2215

Curve Data for Alignment # 11:							
Point #	Point Type	Station	Northing	Easting	Radius	Length	Tangent
11.1	PC	0+00.0	307416.9039	986305.8869			
	PI	0+22.0	307411.8475	986327.2651	978.00	43.90	21.97
11.2	PT	0+43.9	307405.8362	986348.3947			
11.3	POE	0+71.0	307398.4353	986374.4089			

Geometrics Station & Offsets For Alignment #11				
Point #	Station	Offset	Northing	Easting
11.1	25+34.5	22.0	307416.9039	986305.8869
11.2	25+79.4	22.0	307405.8362	986348.3947
11.3	26+06.5	22.0	307398.4353	986374.4089

Curve Data for Alignment # 12:							
Point #	Point Type	Station	Northing	Easting	Radius	Length	Tangent
12.1	PC	0+00.0	307382.3344	986400.908			
	PI	0+09.2	307391.1636	986403.3465	10.00	14.83	9.16
12.2	PT	0+14.8	307389.5074	986412.3552			
12.3	POE	0+53.3	307382.5486	986450.2076			

Geometrics Station & Offsets For Alignment #12				
Point #	Station	Offset	Northing	Easting
12.1	26+36.4	30.2	307382.3344	986400.9080
12.2	26+45.4	20.2	307389.5074	986412.3552
12.3	26+83.7	16.5	307382.5486	986450.2076

PLAN

25 0 25 50

Scale of Feet

Stantec

STATE OF MAINE
DEPARTMENT OF TRANSPORTATION

STP-1928(200)

WIN 19282.00

BRIDGE NO. 5661

BRIDGE PLANS

PROJ. MANAGER	NATE BENOIT		
DESIGN-DETAILED	PZA	PZA	SEPT 2014
CHECKED-REVIEWED	TPL	TPL/TWM	SEPT 2014
DESIGN2-DETAILED2			
DESIGN3-DETAILED3			
REVISIONS 1			
REVISIONS 2			
REVISIONS 3			
REVISIONS 4			
FIELD CHANGES			

P.E. NUMBER

SIGNATURE

DATE

BRIDGE STREET BRIDGE
PRESUMPSCOT RIVER
WESTBROOK CUMBERLAND COUNTY

CURB GEOMETRY & DRAINAGE LAYOUT PLAN 3

SHEET NUMBER

15

OF 74

Filename: ...\015_Main St Curb geometry 2.dgn Division: BRIDGE Username: common Date:9/15/2014

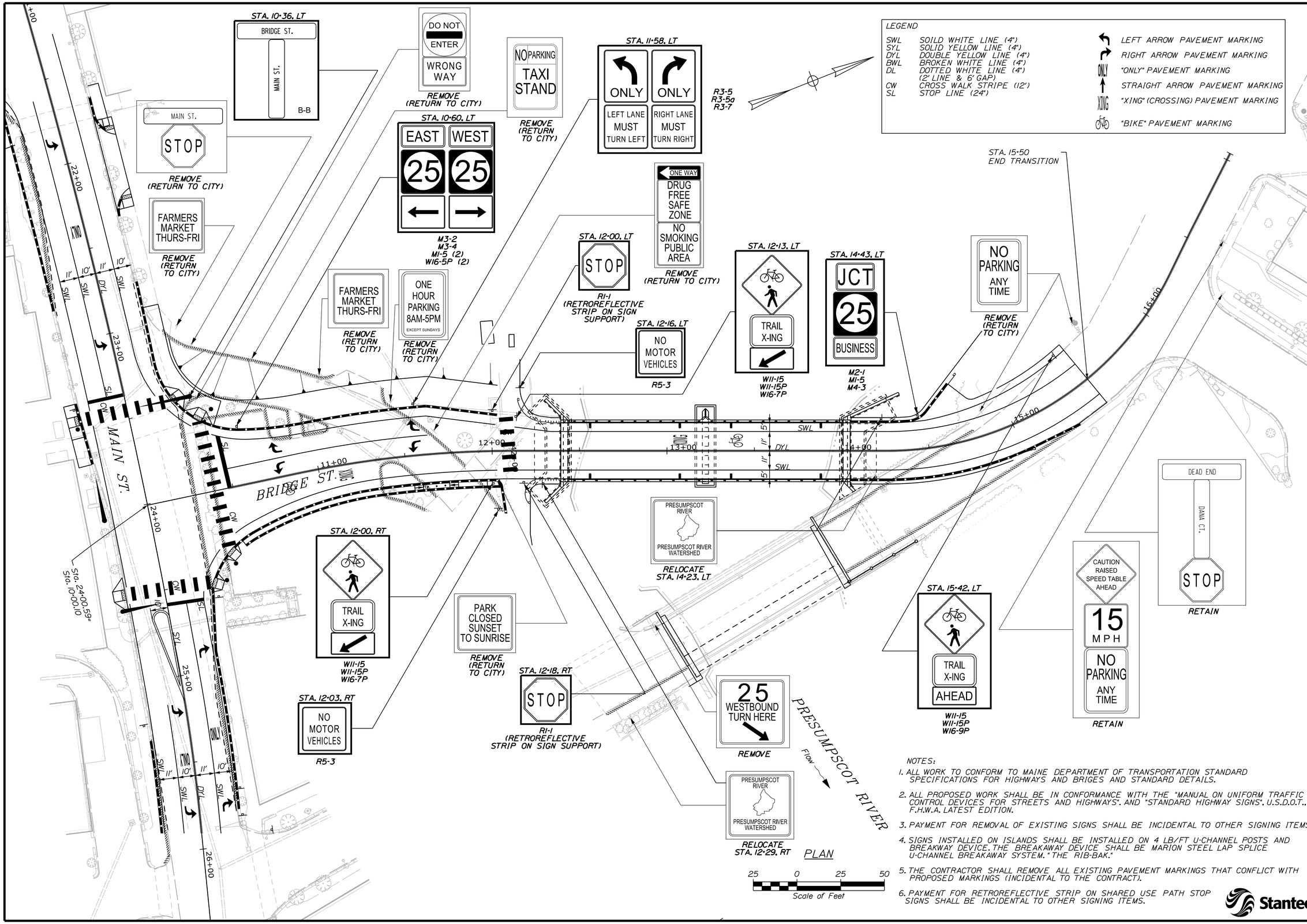

NOTES:

1. ALL WORK TO CONFORM TO MAINE DEPARTMENT OF TRANSPORTATION STANDARD SPECIFICATIONS FOR HIGHWAYS AND BRIGES AND STANDARD DETAILS.
2. ALL PROPOSED WORK SHALL BE IN CONFORMANCE WITH THE "MANUAL ON UNIFORM TRAFFIC CONTROL DEVICES FOR STREETS AND HIGHWAYS". AND "STANDARD HIGHWAY SIGNS". U.S.D.O.T.. F.H.W.A. LATEST EDITION.
3. PAYMENT FOR REMOVAL OF EXISTING SIGNS SHALL BE INCIDENTAL TO OTHER SIGNING ITEMS.
4. SIGNS INSTALLED ON ISLANDS SHALL BE INSTALLED ON 4 LB/FT U-CHANNEL POSTS AND BREAKAWAY DEVICE. THE BREAKAWAY DEVICE SHALL BE MARION STEEL LAP SPLICE U-CHANNEL BREAKAWAY SYSTEM. " THE RIB-BAK."
5. THE CONTRACTOR SHALL REMOVE ALL EXISTING PAVEMENT MARKINGS THAT CONFLICT WITH PROPOSED MARKINGS (INCIDENTAL TO THE CONTRACT).
6. PAYMENT FOR RETROREFLECTIVE STRIP ON SHARED USE PATH STOP SIGNS SHALL BE INCIDENTAL TO OTHER SIGNING ITEMS.

Stantec

STATE OF MAINE
DEPARTMENT OF TRANSPORTATION

STP-1928(200)

WIN 19282.00

BRIDGE NO. 5661

BRIDGE PLANS

		BY	DATE
PROJ. MANAGER	NATE BENOIT		
DESIGN-DETAILED	PZA	PZA	SEPT 2014
CHECKED-REVIEWED	TPL	TPL/TWM	SEPT 2014
DESIGN2-DETAILED2			
DESIGN3-DETAILED3			
REVISIONS 1			
REVISIONS 2			
REVISIONS 3			
REVISIONS 4			
FIELD CHANGES			

P.E. NUMBER

SIGNATURE

DATE

BRIDGE STREET BRIDGE
PRESUMPSCOT RIVER
WESTBROOK CUMBERLAND COUNTY

SIGNING & STRIPING PLAN 1

SHEET NUMBER

16

OF 74

Filename: ...\016_Signing & Striping Plan 1.dgn Division: BRIDGE Username: common Date:9/19/2014

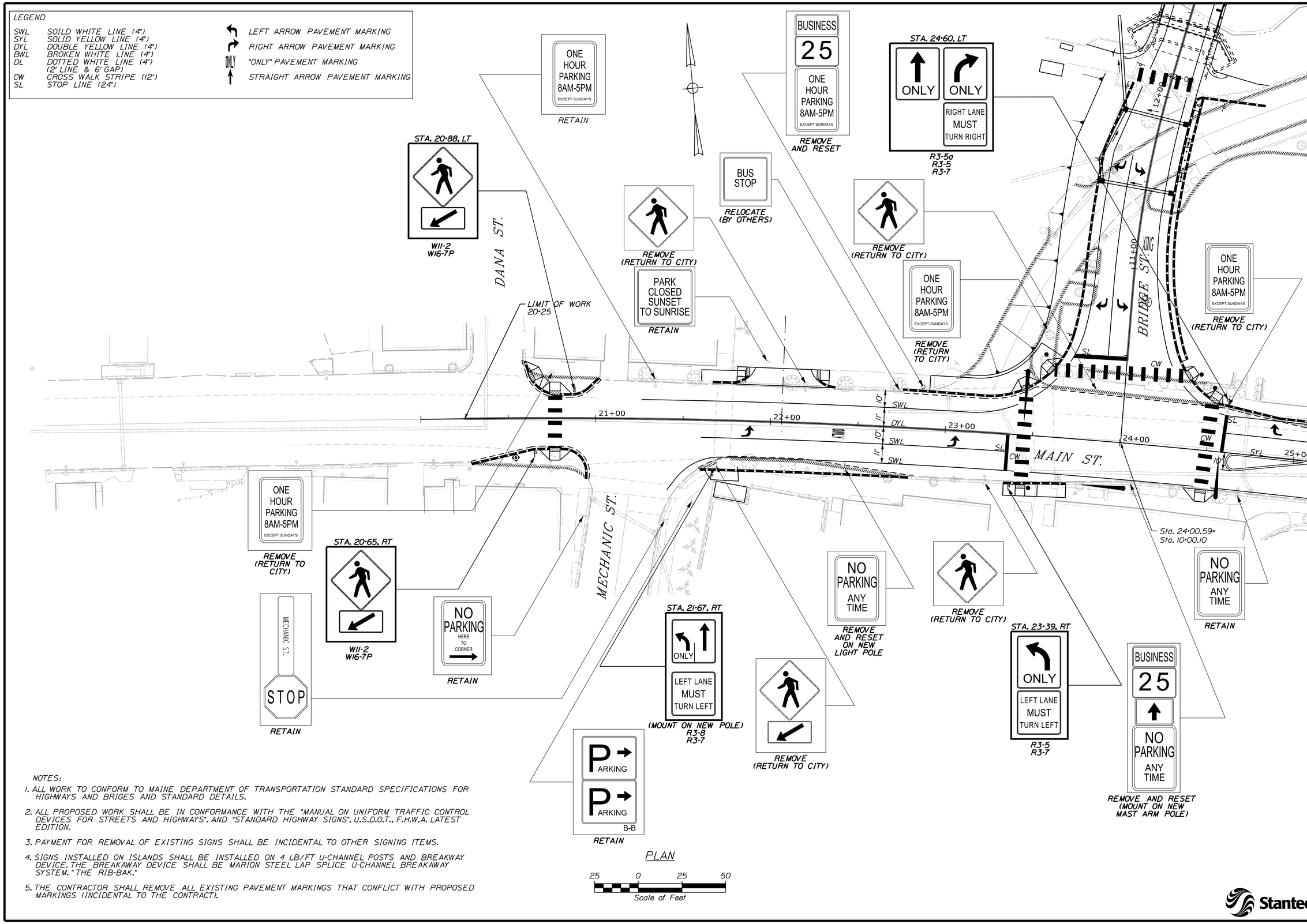

NOTES:

1. ALL WORK TO CONFORM TO MAINE DEPARTMENT OF TRANSPORTATION STANDARD SPECIFICATIONS FOR HIGHWAYS AND BRIGES AND STANDARD DETAILS.
2. ALL PROPOSED WORK SHALL BE IN CONFORMANCE WITH THE "MANUAL ON UNIFORM TRAFFIC CONTROL DEVICES FOR STREETS AND HIGHWAYS". AND "STANDARD HIGHWAY SIGNS". U.S.D.O.T., F.H.W.A. LATEST EDITION.
3. PAYMENT FOR REMOVAL OF EXISTING SIGNS SHALL BE INCIDENTAL TO OTHER SIGNING ITEMS.
4. SIGNS INSTALLED ON ISLANDS SHALL BE INSTALLED ON 4 LB/FT U-CHANNEL POSTS AND BREAKWAY DEVICE. THE BREAKAWAY DEVICE SHALL BE MARION STEEL LAP SPLICE U-CHANNEL BREAKAWAY SYSTEM. "THE RIB-BAK."
5. THE CONTRACTOR SHALL REMOVE ALL EXISTING PAVEMENT MARKINGS THAT CONFLICT WITH PROPOSED MARKINGS (INCIDENTAL TO THE CONTRACT).

Stantec

STATE OF MAINE
DEPARTMENT OF TRANSPORTATION

STP-1928(200)

WIN 19282.00

BRIDGE NO. 5661

BRIDGE PLANS

	BY	DATE
PROJ. MANAGER	NATE BENOIT	
DESIGN-DETAILED	PZA	SEPT 2014
CHECKED-REVIEWED	TPL	SEPT 2014
DESIGN2-DETAILED2		
DESIGN3-DETAILED3		
REVISIONS 1		
REVISIONS 2		
REVISIONS 3		
REVISIONS 4		
FIELD CHANGES		

SIGNATURE

P.E. NUMBER

DATE

BRIDGE STREET BRIDGE
PRESUMPSCOT RIVER
WESTBROOK CUMBERLAND COUNTY

SIGNING & STRIPING PLAN 2

SHEET NUMBER

17

OF 74

Filename: ...\017_Signing & Striping Plan 2.dgn Division: BRIDGE Username: common Date:9/15/2014

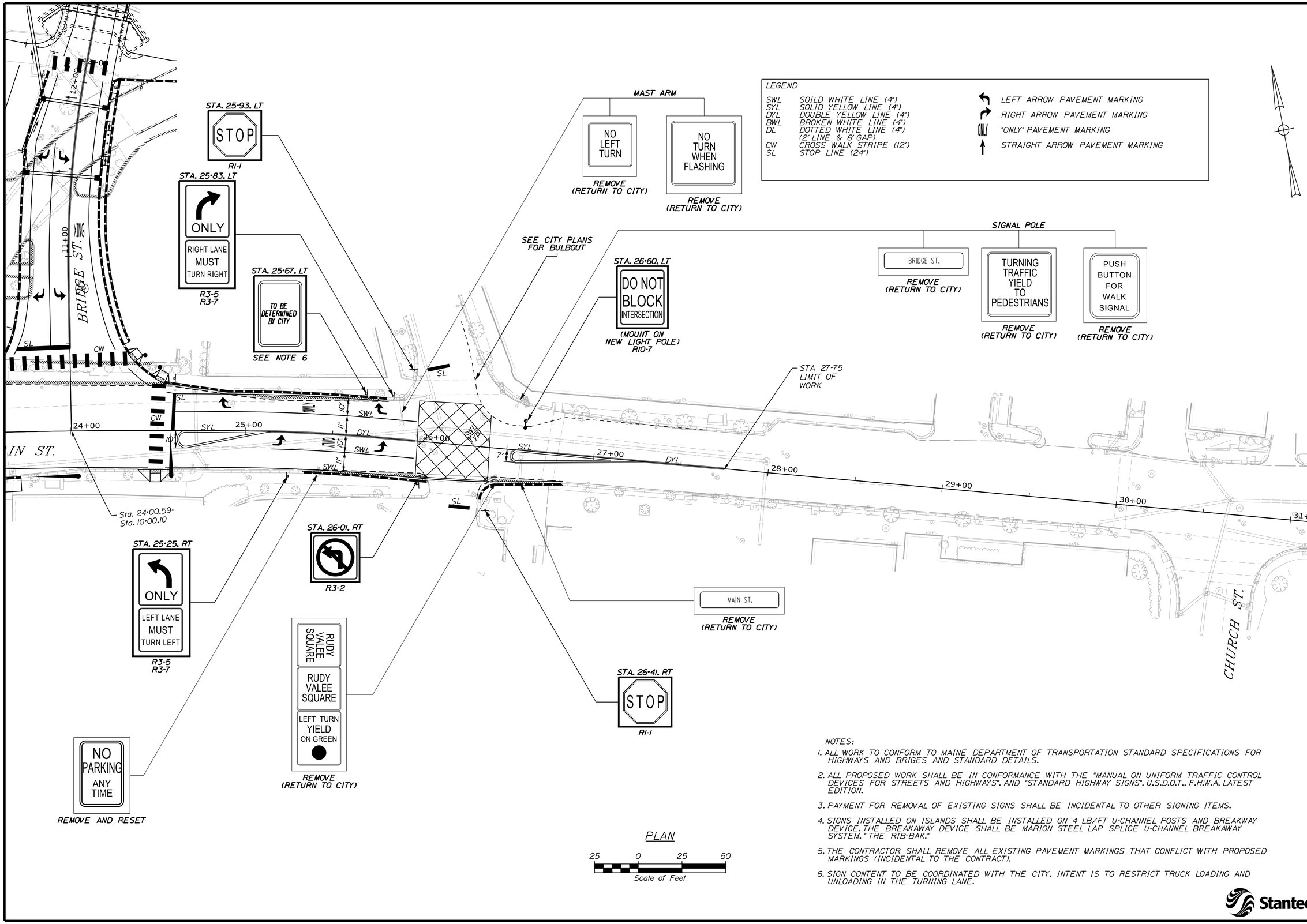

LEGEND

SWL	SOILD WHITE LINE (4")	LEFT ARROW PAVEMENT MARKING
SYL	SOLID YELLOW LINE (4")	RIGHT ARROW PAVEMENT MARKING
DYL	DOUBLE YELLOW LINE (4")	"ONLY" PAVEMENT MARKING
BWL	BROKEN WHITE LINE (4")	STRAIGHT ARROW PAVEMENT MARKING
DL	DOTTED WHITE LINE (4") (2' LINE & 6' GAP)	
CW	CROSS WALK STRIPE (12')	
SL	STOP LINE (24")	

NOTES:

1. ALL WORK TO CONFORM TO MAINE DEPARTMENT OF TRANSPORTATION STANDARD SPECIFICATIONS FOR HIGHWAYS AND BRIGES AND STANDARD DETAILS.
2. ALL PROPOSED WORK SHALL BE IN CONFORMANCE WITH THE "MANUAL ON UNIFORM TRAFFIC CONTROL DEVICES FOR STREETS AND HIGHWAYS". AND "STANDARD HIGHWAY SIGNS". U.S.D.O.T.. F.H.W.A. LATEST EDITION.
3. PAYMENT FOR REMOVAL OF EXISTING SIGNS SHALL BE INCIDENTAL TO OTHER SIGNING ITEMS.
4. SIGNS INSTALLED ON ISLANDS SHALL BE INSTALLED ON 4 LB/FT U-CHANNEL POSTS AND BREAKWAY DEVICE. THE BREAKAWAY DEVICE SHALL BE MARION STEEL LAP SPLICE U-CHANNEL BREAKAWAY SYSTEM. "THE RIB-BAK."
5. THE CONTRACTOR SHALL REMOVE ALL EXISTING PAVEMENT MARKINGS THAT CONFLICT WITH PROPOSED MARKINGS (INCIDENTAL TO THE CONTRACT).
6. SIGN CONTENT TO BE COORDINATED WITH THE CITY. INTENT IS TO RESTRICT TRUCK LOADING AND UNLOADING IN THE TURNING LANE.

Stantec

STATE OF MAINE
DEPARTMENT OF TRANSPORTATION

STP-1928(200)

WIN 19282.00

BRIDGE NO. 5661

BRIDGE PLANS

PROJ. MANAGER	NATE BENOIT	BY	DATE
DESIGN-DETAILED	PZA	PZA	SEPT 2014
CHECKED-REVIEWED	TPL	TPL/TWM	SEPT 2014
DESIGN2-DETAILED2			
DESIGN3-DETAILED3			
REVISIONS 1			
REVISIONS 2			
REVISIONS 3			
REVISIONS 4			
FIELD CHANGES			

SIGNATURE

P.E. NUMBER

DATE

BRIDGE STREET BRIDGE
PRESUMPSCOT RIVER
WESTBROOK CUMBERLAND COUNTY

SIGNING & STRIPING PLAN 3

SHEET NUMBER

18

OF 74

Filename: ...\018_Signing & Striping Plan 3.dgn Division: BRIDGE Username: common Date:9/15/2014

ITEM NUMBER	IDENTIFICATION NUMBER	SIZE OF SIGN WIDTH	SIZE OF SIGN HEIGHT	TEXT	TEXT DIMENSIONS (INCHES) LETTER HEIGHT	TEXT DIMENSIONS (INCHES) VERTICAL SPACING	TEXT DIMENSIONS (INCHES) ARROW RTE. MKR.	NUMBER OF SIGNS REQUIRED	COLOR BACK-GROUND	COLOR LEGEND BORDER	TOTAL AREA IN SQUARE FEET	POST
				BRIDGE ST.								
XXXXXX	XXXXXXX	X	X	BRIDGE ST. / MAIN ST. B-B				1	XXXXX	XXXXX	X.XX	MAST-ARM
XXXXXX	XXXXXXX	X	X					1	XXXXX	XXXXX	X.XX	MAST-ARM
645.291	M3-2	24	12	EAST				1	WHITE	BLACK	2.00	U CHANNEL
645.291	M3-4	24	12	WEST				1	WHITE	BLACK	2.00	U CHANNEL
645.291	M1-5	24	24	25				1	WHITE	BLACK	4.00	U CHANNEL
645.291	M1-5	24	24	25				1	WHITE	BLACK	4.00	U CHANNEL
645.291	M6-1 (L)	24	18	←				1	WHITE	BLACK	3.00	U CHANNEL
645.291	M6-1 (R)	24	18	→				1	WHITE	BLACK	3.00	U CHANNEL
645.292	R3-5	30	36	↰ ONLY				1	WHITE	BLACK	7.50	U CHANNEL
645.292	R3-5	30	36	↱ ONLY				1	WHITE	BLACK	7.50	U CHANNEL
645.292	R3-7	30	30	LEFT LANE MUST TURN LEFT				1	WHITE	BLACK	6.25	U CHANNEL
645.292	R3-7	30	30	RIGHT LANE MUST TURN RIGHT				1	WHITE	BLACK	6.25	U CHANNEL
645.292	R1-1	18	18	STOP				1	RED	WHITE	2.25	U CHANNEL
645.292	W11-15	30	30					1	*F Y-G	BLACK	6.25	U CHANNEL
645.292	W11-15P	24	18	TRAIL X-ING				1	*F Y-G	BLACK	3.00	U CHANNEL
645.292	W16-7P	24	12	↙				1	*F Y-G	BLACK	2.00	U CHANNEL
645.292	R5-3	24	24	NO MOTOR VEHICLES				1	WHITE	BLACK	4.00	U CHANNEL
645.292	W11-15	30	30					1	*F Y-G	BLACK	6.25	U CHANNEL
645.292	W11-15P	24	18	TRAIL X-ING				1	*F Y-G	BLACK	3.00	U CHANNEL
645.292	W16-7P	24	12	↙				1	*F Y-G	BLACK	2.00	U CHANNEL
645.292	R5-3	24	24	NO MOTOR VEHICLES				1	WHITE	BLACK	4.00	U CHANNEL
645.292	R1-1	18	18	STOP				1	RED	WHITE	2.25	U CHANNEL

*F Y-G = Fluorescent Yellow-Green

ITEM NUMBER	IDENTIFICATION NUMBER	SIZE OF SIGN WIDTH	SIZE OF SIGN HEIGHT	TEXT	TEXT DIMENSIONS (INCHES) LETTER HEIGHT	TEXT DIMENSIONS (INCHES) VERTICAL SPACING	TEXT DIMENSIONS (INCHES) ARROW RTE. MKR.	NUMBER OF SIGNS REQUIRED	COLOR BACK-GROUND	COLOR LEGEND BORDER	TOTAL AREA IN SQUARE FEET	POST
				BRIDGE ST.								
645.291	M2-1	21	15	JCT 25 BUSINESS				1	WHITE	BLACK	2.19	U CHANNEL
645.291	M1-5	24	24					1	WHITE	BLACK	4.00	U CHANNEL
645.291	M4-3	24	12					1	WHITE	BLACK	2.00	U CHANNEL
645.292	W11-15	30	30	TRAIL X-ING AHEAD				1	*F Y-G	BLACK	6.25	U CHANNEL
645.292	W11-15P	24	18					1	*F Y-G	BLACK	3.00	U CHANNEL
645.292	W16-9P	24	12					1	*F Y-G	BLACK	2.00	U CHANNEL
				MAIN ST.								
645.292	W11-2	30	30	↙				1	*F Y-G	BLACK	6.25	U CHANNEL
645.292	W16-7P	24	12					1	*F Y-G	BLACK	2.00	U CHANNEL
645.292	W11-2	30	30	↙				1	*F Y-G	BLACK	6.25	U CHANNEL
645.292	W16-7P	24	12					1	*F Y-G	BLACK	2.00	U CHANNEL
645.292	R3-8	30	36	↰ ↑ ONLY				1	WHITE	BLACK	7.50	NEW LIGHT POLE
645.292	R3-7	30	30	LEFT LANE MUST TURN LEFT				1	WHITE	BLACK	6.25	
645.292	R3-5	30	36	↰ ONLY				1	WHITE	BLACK	7.50	U CHANNEL
645.292	R3-7	30	30	LEFT LANE MUST TURN LEFT				1	WHITE	BLACK	6.25	U CHANNEL
645.292	R3-5a	30	36	↑ ONLY ↱ ONLY				1	WHITE	BLACK	7.50	U CHANNEL
645.292	R3-5	30	36					1	WHITE	BLACK	7.50	U CHANNEL
645.292	R3-7	30	30	RIGHT LANE MUST TURN RIGHT				1	WHITE	BLACK	6.25	U CHANNEL

STATE OF MAINE
DEPARTMENT OF TRANSPORTATION

STP-1928(200)

WIN 19282.00

BRIDGE NO. 5661

BRIDGE PLANS

SIGNATURE

P.E. NUMBER

DATE

		BY	DATE
PROJ. MANAGER	NATE BENOIT		
DESIGN-DETAILED	PZA	PZA	SEPT 2014
CHECKED-REVIEWED	TPL	TPL/TWM	SEPT 2014
DESIGN2-DETAILED2			
DESIGN3-DETAILED3			
REVISIONS 1			
REVISIONS 2			
REVISIONS 3			
REVISIONS 4			
FIELD CHANGES			

BRIDGE STREET BRIDGE
PRESUMPSCOT RIVER
WESTBROOK CUMBERLAND COUNTY

SIGN SUMMARY SHEET 1

SHEET NUMBER
19
OF 74

Stantec

Filename: ...\019_Sign Summary Sheet 1.dgn Division: BRIDGE Username: common Date:9/15/2014

ITEM NUMBER	IDENTIFICATION NUMBER	SIZE OF SIGN WIDTH	SIZE OF SIGN HEIGHT	TEXT	TEXT DIMENSIONS (INCHES) LETTER HEIGHT	TEXT DIMENSIONS (INCHES) VERTICAL SPACING	TEXT DIMENSIONS (INCHES) ARROW RTE. MKR.	NUMBER OF SIGNS REQUIRED	COLOR BACK-GROUND	COLOR LEGEND BORDER	TOTAL AREA IN SQUARE FEET	POST
MAIN ST.												
645.292	R3-5	30	36	ONLY				1	WHITE	BLACK	7.50	U CHANNEL
645.292	R3-7	30	30	LEFT LANE MUST TURN LEFT				1	WHITE	BLACK	6.25	U CHANNEL
645.292	?	?	?	TO BE DETERMINED BY CITY				1	WHITE	RED	1.50	U CHANNEL
645.292	R3-5	30	36	ONLY				1	WHITE	BLACK	7.50	U CHANNEL
645.292	R3-7	30	30	RIGHT LANE MUST TURN RIGHT				1	WHITE	BLACK	6.25	U CHANNEL
645.292	R1-1	30	30	STOP				1	RED	WHITE	6.25	U CHANNEL
645.292	R3-2	36	36					1	WHITE	BLACK	9.00	U CHANNEL
645.292	R1-1	30	30	STOP				1	RED	WHITE	6.25	U CHANNEL
645.292	R7-2a	24	30	DO NOT BLOCK INTERSECTION				1	WHITE	BLACK	5.00	LIGHT POLE

ITEM NUMBER	IDENTIFICATION NUMBER	SIZE OF SIGN WIDTH	SIZE OF SIGN HEIGHT	TEXT	TEXT DIMENSIONS (INCHES) LETTER HEIGHT	TEXT DIMENSIONS (INCHES) VERTICAL SPACING	TEXT DIMENSIONS (INCHES) ARROW RTE. MKR.	NUMBER OF SIGNS REQUIRED	COLOR BACK-GROUND	COLOR LEGEND BORDER	TOTAL AREA IN SQUARE FEET	POST

STATE OF MAINE
DEPARTMENT OF TRANSPORTATION

STP-1928(200)

WIN 19282.00

BRIDGE NO. 5661

BRIDGE PLANS

SIGNATURE

P.E. NUMBER

DATE

		BY	DATE
PROJ. MANAGER	NATE BENOIT		
DESIGN-DETAILED	PZA	PZA	SEPT 2014
CHECKED-REVIEWED	TPL	TPL/TWM	SEPT 2014
DESIGN2-DETAILED2			
DESIGN3-DETAILED3			
REVISIONS 1			
REVISIONS 2			
REVISIONS 3			
REVISIONS 4			
FIELD CHANGES			

BRIDGE STREET BRIDGE
PRESUMPSCOT RIVER
WESTBROOK CUMBERLAND COUNTY

SIGN SUMMARY SHEET 2

SHEET NUMBER

20

OF 74

Stantec

Filename: ...\020_Sign Summary Sheet 2.dgn Division: BRIDGE Username: common Date:9/15/2014

Filename: ...\MSTA\021_Utility Plan.dgn Division: BRIDGE Username: common Date:10/1/2014

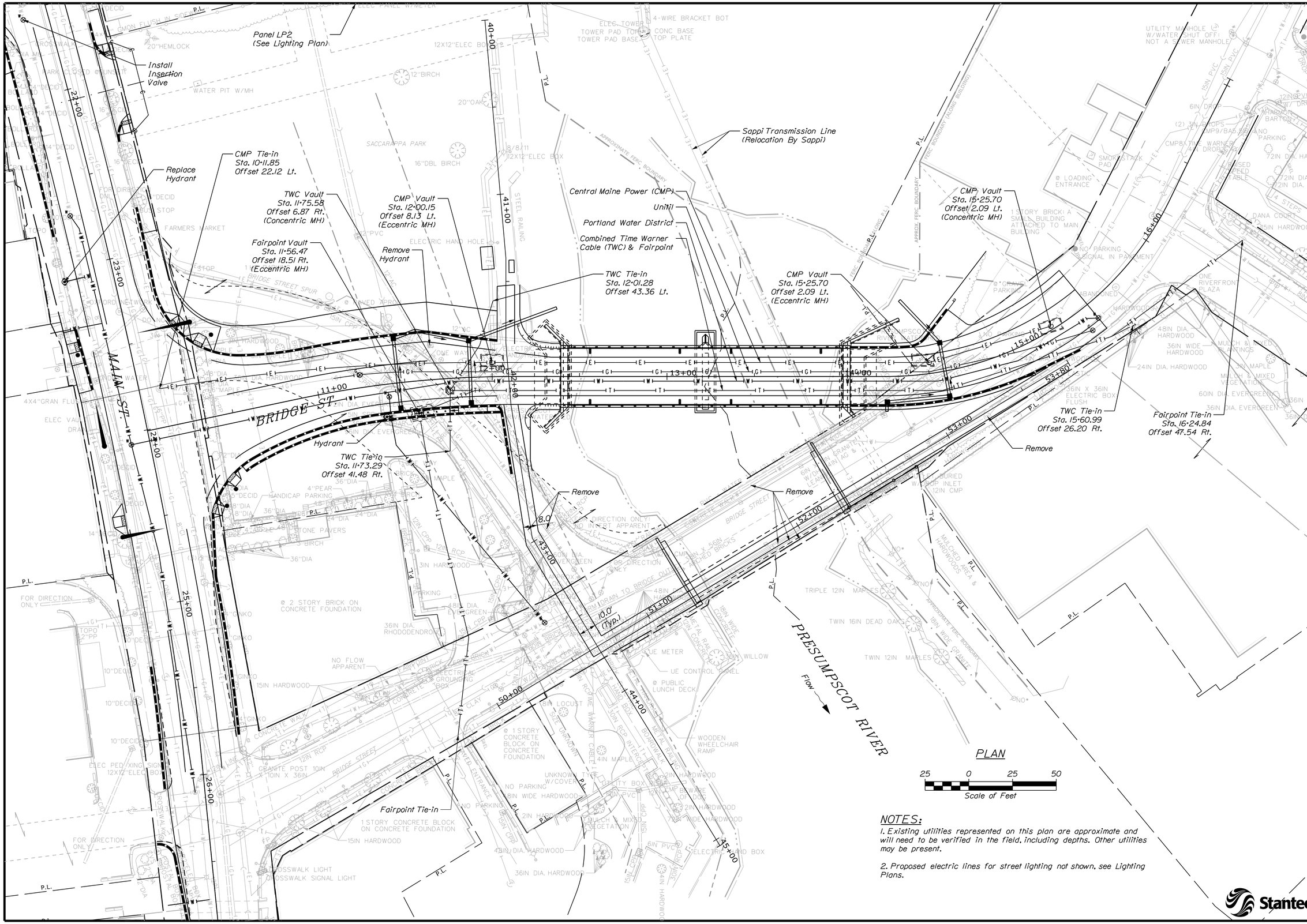

NOTES:

1. Existing utilities represented on this plan are approximate and will need to be verified in the field, including depths. Other utilities may be present.

2. Proposed electric lines for street lighting not shown, see Lighting Plans.

Stantec

STATE OF MAINE
DEPARTMENT OF TRANSPORTATION

STP-1928(200)

WIN 19282.00

BRIDGE NO. 5661

BRIDGE PLANS

PROJ. MANAGER	NATE BENOIT			
DESIGN-DETAILED	DOT	BY	DATE	
CHECKED-REVIEWED	TWM	DOT/TWM	SEPT 2014	SIGNATURE
DESIGN2-DETAILED2				P.E. NUMBER
DESIGN3-DETAILED3				
REVISIONS 1				
REVISIONS 2				DATE
REVISIONS 3				
REVISIONS 4				
FIELD CHANGES				

BRIDGE STREET BRIDGE
PRESUMPSCOT RIVER
WESTBROOK CUMBERLAND COUNTY

UTILITY PLAN

SHEET NUMBER

21

OF 74

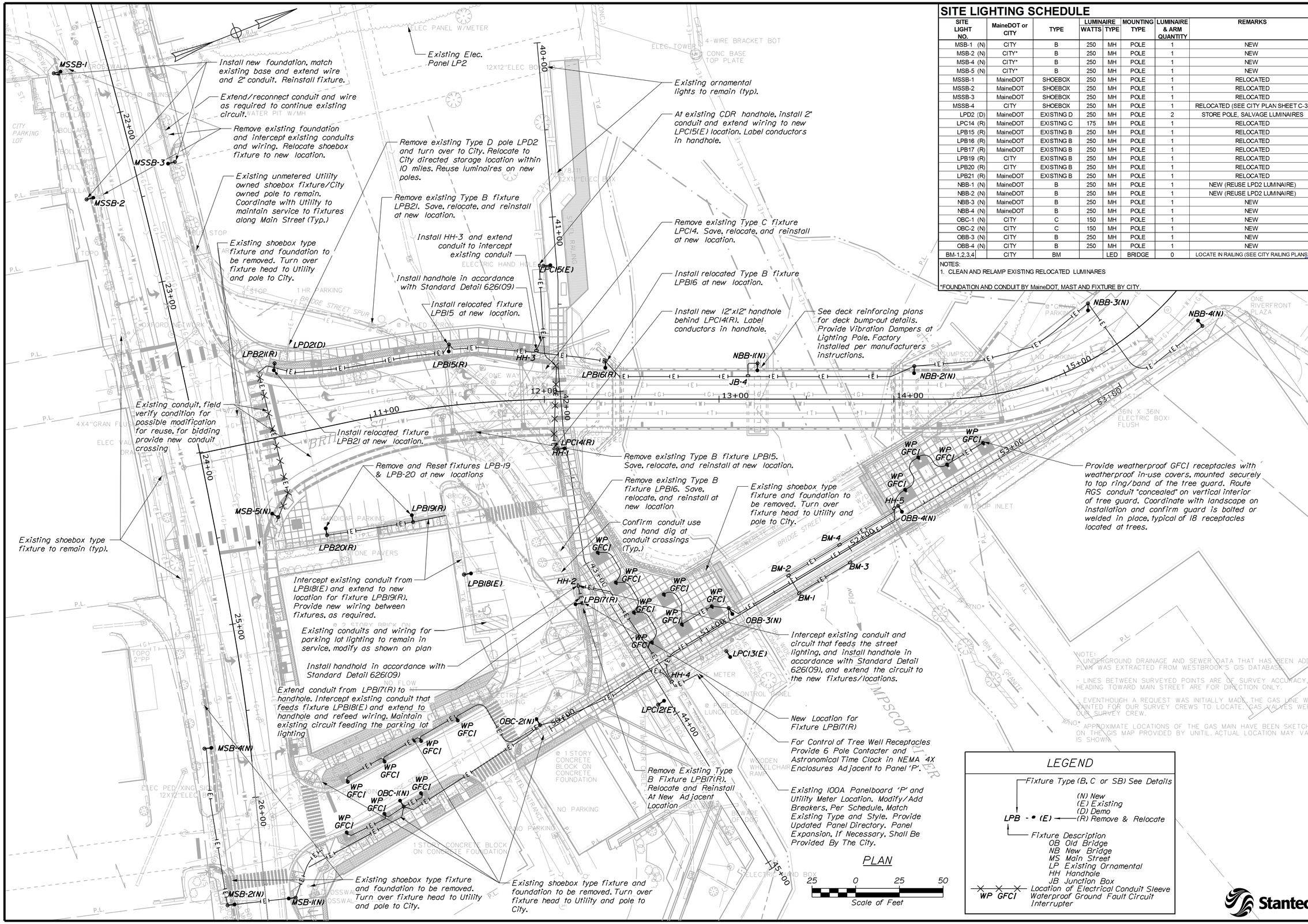

SITE LIGHTING SCHEDULE

SITE LIGHT NO.	MaineDOT or CITY	TYPE	LUMINAIRE WATTS	LUMINAIRE TYPE	MOUNTING TYPE	LUMINAIRE & ARM QUANTITY	REMARKS
MSB-1 (N)	CITY	B	250	MH	POLE	1	NEW
MSB-2 (N)	CITY*	B	250	MH	POLE	1	NEW
MSB-4 (N)	CITY*	B	250	MH	POLE	1	NEW
MSB-5 (N)	CITY*	B	250	MH	POLE	1	NEW
MSSB-1	MaineDOT	SHOEBOX	250	MH	POLE	1	RELOCATED
MSSB-2	MaineDOT	SHOEBOX	250	MH	POLE	1	RELOCATED
MSSB-3	MaineDOT	SHOEBOX	250	MH	POLE	1	RELOCATED
MSSB-4	CITY	SHOEBOX	250	MH	POLE	1	RELOCATED (SEE CITY PLAN SHEET C-3)
LPD2 (D)	MaineDOT	EXISTING D	250	MH	POLE	2	STORE POLE, SALVAGE LUMINAIRES
LPC14 (R)	MaineDOT	EXISTING C	175	MH	POLE	1	RELOCATED
LPB15 (R)	MaineDOT	EXISTING B	250	MH	POLE	1	RELOCATED
LPB16 (R)	MaineDOT	EXISTING B	250	MH	POLE	1	RELOCATED
LPB17 (R)	MaineDOT	EXISTING B	250	MH	POLE	1	RELOCATED
LPB19 (R)	CITY	EXISTING B	250	MH	POLE	1	RELOCATED
LPB20 (R)	CITY	EXISTING B	250	MH	POLE	1	RELOCATED
LPB21 (R)	MaineDOT	EXISTING B	250	MH	POLE	1	RELOCATED
NBB-1 (N)	MaineDOT	B	250	MH	POLE	1	NEW (REUSE LPD2 LUMINAIRE)
NBB-2 (N)	MaineDOT	B	250	MH	POLE	1	NEW (REUSE LPD2 LUMINAIRE)
NBB-3 (N)	MaineDOT	B	250	MH	POLE	1	NEW
NBB-4 (N)	MaineDOT	B	250	MH	POLE	1	NEW
OBC-1 (N)	CITY	C	150	MH	POLE	1	NEW
OBC-2 (N)	CITY	C	150	MH	POLE	1	NEW
OBB-3 (N)	CITY	B	250	MH	POLE	1	NEW
OBB-4 (N)	CITY	B	250	MH	POLE	1	NEW
BM-1,2,3,4	CITY	BM		LED	BRIDGE	0	LOCATE IN RAILING (SEE CITY RAILING PLANS)

NOTES:
1. CLEAN AND RELAMP EXISTING RELOCATED LUMINARES

*FOUNDATION AND CONDUIT BY MaineDOT, MAST AND FIXTURE BY CITY.

LEGEND

Fixture Type (B, C or SB) See Details

LPB - * (E)

(N) New
(E) Existing
(D) Demo
(R) Remove & Relocate

Fixture Description
OB Old Bridge
NB New Bridge
MS Main Street
LP Existing Ornamental
HH Handhole
JB Junction Box

Location of Electrical Conduit Sleeve

WP GFCI — Waterproof Ground Fault Circuit Interrupter

NOTE:
1. UNDERGROUND DRAINAGE AND SEWER DATA THAT HAS BEEN ADDED TO THIS PLAN WAS EXTRACTED FROM WESTBROOK'S GIS DATABASE.
- LINES BETWEEN SURVEYED POINTS ARE OF SURVEY ACCURACY. LINES HEADING TOWARD MAIN STREET ARE FOR DIRECTION ONLY.
- EVENTHOUGH A REQUEST WAS INITIALLY MADE, THE GAS LINE WAS NOT PAINTED FOR OUR SURVEY CREWS TO LOCATE. GAS VALVES WERE LOCATED BY OUR SURVEY CREW.
- APPROXIMATE LOCATIONS OF THE GAS MAIN HAVE BEEN SKETCHED ON THE GIS MAP PROVIDED BY UNITIL. ACTUAL LOCATION MAY VARY AS SHOWN.

STATE OF MAINE
DEPARTMENT OF TRANSPORTATION

STP-1928(200)

WIN 19282.00

BRIDGE NO. 5661

BRIDGE PLANS

STATE OF MAINE
RICHARD A. NADEAU
No. 10553
LICENSED PROFESSIONAL ENGINEER

PROJ. MANAGER	NATE BENOIT		
DESIGN-DETAILED	MLC	JTS	SEPT 2014
CHECKED-REVIEWED	TWM	MLC/TWM	SEPT 2014
DESIGN2-DETAILED2			
DESIGN3-DETAILED3			
REVISIONS 1			
REVISIONS 2			
REVISIONS 3			
REVISIONS 4			
FIELD CHANGES			

SIGNATURE

P.E. NUMBER

DATE

BRIDGE STREET BRIDGE
PRESUMPSCOT RIVER
WESTBROOK CUMBERLAND COUNTY

LIGHTING PLAN

SHEET NUMBER
22
OF 74

Stantec

Filename: ...\MSTA\022_Lighting_Plan.dgn Division: BRIDGE Username: common Date:9/19/2014

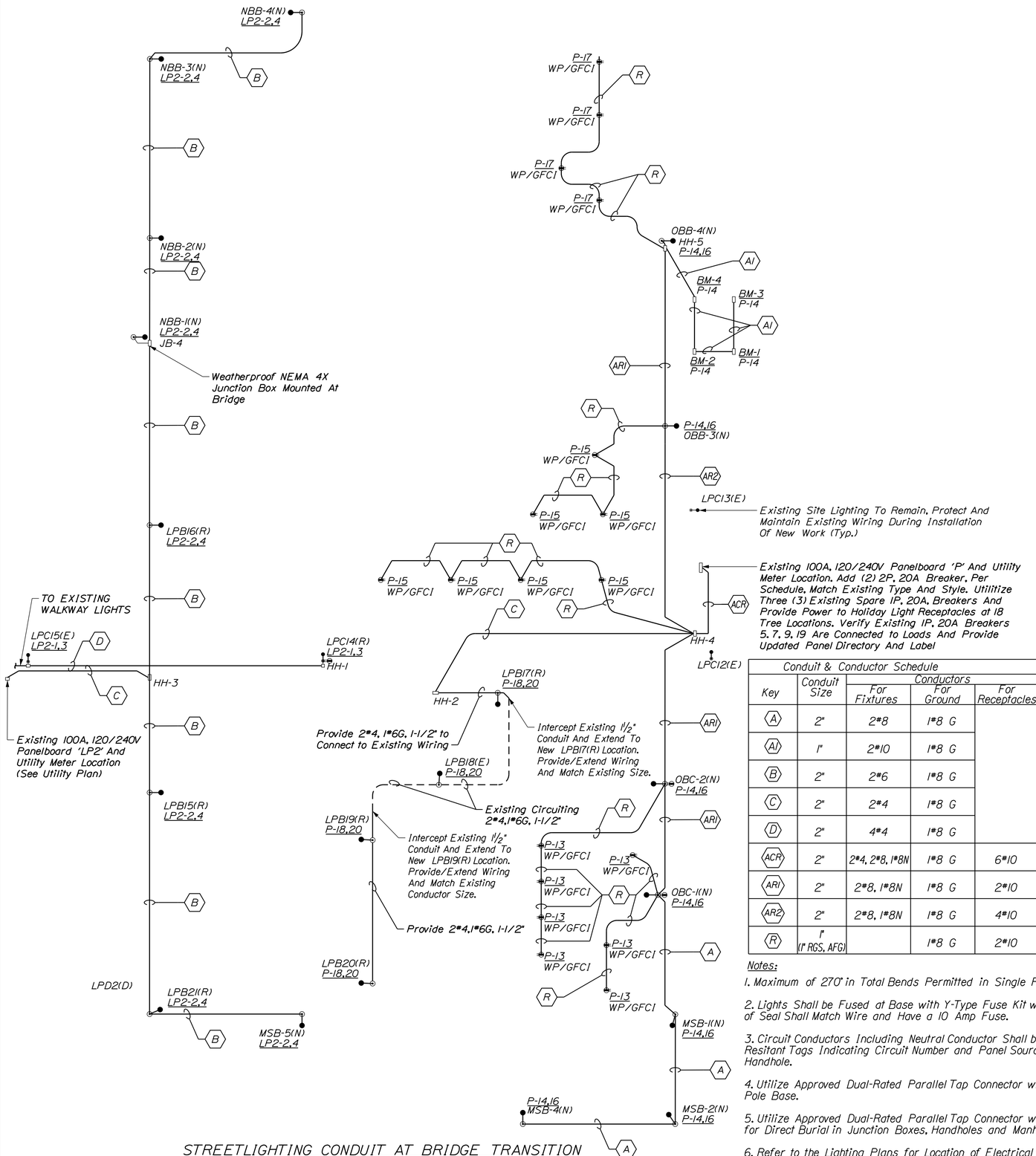

STREETLIGHTING CONDUIT AT BRIDGE TRANSITION

Not To Scale

Conduit & Conductor Schedule				
		Conductors		
Key	Conduit Size	For Fixtures	For Ground	For Receptacles
A	2"	2#8	1#8 G	
A1	1"	2#10	1#8 G	
B	2"	2#6	1#8 G	
C	2"	2#4	1#8 G	
D	2"	4#4	1#8 G	
ACR	2"	2#4, 2#8, 1#8N	1#8 G	6#10
AR1	2"	2#8, 1#8N	1#8 G	2#10
AR2	2"	2#8, 1#8N	1#8 G	4#10
R	1" (1" RGS, AFG)		1#8 G	2#10

Notes:

1. Maximum of 270° in Total Bends Permitted in Single Run of Conduit.

2. Lights Shall be Fused at Base with Y-Type Fuse Kit with Waterproof Insulated Seal. Size of Seal Shall Match Wire and Have a 10 Amp Fuse.

3. Circuit Conductors Including Neutral Conductor Shall be Clearly identified by Corrosion Resitant Tags Indicating Circuit Number and Panel Sources at Every Pole Base and Handhole.

4. Utilize Approved Dual-Rated Parallel Tap Connector with Insulated Cover for Taps at Pole Base.

5. Utilize Approved Dual-Rated Parallel Tap Connector with Watertight Connector, Suitable for Direct Burial in Junction Boxes, Handholes and Manholes.

6. Refer to the Lighting Plans for Location of Electrical Conduit Sleeves (4") (PVC) (SCH. 80).

GENERAL STREET LIGHT NOTES

POLES, ANCHOR BASES, ARMS, AND LUMINAIRES.

1. No Pole Shall Be Installed Without A Luminaire Already Attached.

2. Anchor Base And Anchor Bolt Dimensions Are Shown On Detail Sheet.

3. All Light Poles Which Are Provided With A Breakaway Feature Shall Conform To The Requirements Of The AASHTO 2013 Standard Specifications For Structural Supports For Highway Signs, Luminaires, And Traffic Signals, Section 7 And Subsequent Revisions.

4. Luminaires Shall Meet Specifications As Shown On The Plans.

5. All Electrical Material And Electrical Work Shall Be Subject To Inspection And Approval By The Area Electrical Inspector And/Or The Power Company With Jurisdiction In The Project Area.

6. All Work Must Meet The Requirements Of The National Electrical Code, As Well As Local And State Codes.

7. Poles, Base Plates, And Arms Shall Meet The The Latest Specification Of Edition Of AASHTO-AGC-ARTBA's "Guide To Standardized Highway Lighting Polehardware" or As Otherwise Noted On The Plans.

8. Anchor Bolts Will Be Acceptable With Either Rolled Or Cut-In Threads With Minor Variations From The Specified Diameter.

9. All Welds Shall Be At Least As Strong As The Material Being Welded.

10. Poles For Ornamental Lighting Are Available In Many Materials, Shapes, Styles And Lengths. Plans Shall Specify.

CONDUIT

1. All Conduit Shall Be At Least PVC (Schedule 40) Or Rigid Galvanized Steel Electrical Conduit (And Conform To The Requirements Of UL-6). Type Of Conduit (P.V.C. Or Steel) Shall Be Noted On The Plans.

CONDUIT SLEEVE (SEE GENERAL PLANS)

1. Minimum Wall Thickness For Rigid Plastic Pipe Sleeves Shall Be 1/35Th The Diameter. All Conduit Runs Under Roadway Shall Be Installed In Rigid Plastic Sleeves. The Sleeve Shall Extend To Within 2 Feet Of The Side Of A Concrete Base Or Pullbox. Where No Concrete Base Or Pullbox Is Present, The Sleeve Shall Extend 4 Feet Beyond The Outside Edge Of Shoulder Or Face Of Curb. Backfilling Around A Sleeve Shall Be In Accordance With The Manufacturer's Specifications.

WIRE

1. All Wiring Between The Meter And/Or Power Source And The First Pole And/Or Pullbox And Between Poles And/Or Pullboxes Shall Be Copper And Sized As Specified On The Plans. All Wire Shall Have Type XHHW Insulation Or Equivalent.

GROUNDING

1. All Conduit Must Include A Grounding Conductor. Rigid Steel Conduit Shall Be Properly Connected At The Joints So As To Be Watertight And Maintain Electrical Continuity And Have Grounding Bushings So As To Act As A Ground Conductor.

2. Aluminum Wire Shall Not Be Used.

3. Every Light Pole Shall Have A Grounding Electrode.

GENERAL NOTES AND SPECIFICATIONS

1. The Scope Of Work Is To Provide All Labor, Materials, Services, Supplies, Tools, Equipment, Transportation, And Facilities Necessary To Furnish And Install A Complete Electrical And Lighting System As Indicated On The Drawings, Specified, Or As May Reasonably Be Implied As Being Incidental To This Work.

2. Secure And Pay Costs Of Permits, Certificates, Licenses, Inspections, And Approvals.

3. All Materials And Installation Shall Be In Accordance With The Latest Edition Of The National Electrical Code, And All Codes, Regulations And Requirements Of All Municipal, State, Federal And Other Public Or Private Authorities Which Have Jurisdiction. In Each Case, Codes Are Minimum Requirements.

4. Shop Drawings: Submit Complete Catalog Information For All Materials And Equipment To Be Purchased And Used On This Project, As Specified On The Drawings. Do Not Install Materials Or Equipment Without Approval By The Owner. Unapproved Material Already Installed Shall Be Subject To Removal And Replacement With Approved Materials At The Contractor's Expense.

5. The Finished Installation Shall Be Complete In Every Respect And Detail, Tested And Left Ready In Perfect Operating Condition For The Owner's Use.

6. Materials And Equipment Shall Be Listed By Underwriters' Laboratories And Shall Be Installed In Accordance With Such Listings.

7. The Contractor Shall Guarantee That Materials, Equipment And Workmanship Provided By Him Shall Be Free From Defects In Materials Or Workmanship For A Period Of One Year From The Date Of Acceptance Of The Work Done Under This Contract, And Shall Replace Parts Found To Be Defective Within The Period Covered By Such Guarntee, Without Cost To The Owner.

8. Installation Shall Be Made In Accordance With Manufacturer's Recommendations.

9. Contractor To Contact Digsafe In Maine Prior To Commencing Work.

10. Contractor To Contact Utility Company For Coordination Of Modifications at Existing Electrical Service, When Required.

11. The Last Concrete Pole Base At The End Of Each Circuit And/Or Handholes Shall Have A Conduit Sweep With Cap Installed For Future Use.

METER STANCHION/POWER DROPS

1. Existing Panelboard Specifications: 100A, 120/240V, 1 Phase, 3W, 22 KAIC, NEMA 3R Branch Circuit Breakers - Provide New (2) 20A, 2P, Match Existing Type, Style, & Rating.

HANDHOLES

1. For Detail Size/Types, Refer To Plans.

CONCRETE BASES

1. When Concrete Bases Are Installed In Sloping Ground, The Greatest Exposed Height To Keep All Of The Top Above Ground Must Be Doubled And Then Added To The Minimum Depth For The Total Base Depth.

2. Care Should Be Taken When Concrete Bases, Drainage Structures Or Utilities Are Close Together.

STATE OF MAINE
DEPARTMENT OF TRANSPORTATION

STP-1928(200)

WIN 19282.00

BRIDGE NO. 5661

BRIDGE PLANS

STATE OF MAINE
RICHARD A. NADEAU
No. 10553
LICENSED
PROFESSIONAL ENGINEER

PROJ. MANAGER	NATE BENOIT		
DESIGN-DETAILED	MLC	JTS	SEPT 2014
CHECKED-REVIEWED	TWM	MLC/TWM	SEPT 2014
DESIGN2-DETAILED2			
DESIGN3-DETAILED3			
REVISIONS 1			
REVISIONS 2			
REVISIONS 3			
REVISIONS 4			
FIELD CHANGES			

SIGNATURE

P.E. NUMBER

DATE

BRIDGE STREET BRIDGE
PRESUMPSCOT RIVER
WESTBROOK CUMBERLAND COUNTY

LIGHTING NOTES

SHEET NUMBER

23

OF 74

Stantec

Filename: ...\MSTA\023_Lighting_Notes.dgn Division: BRIDGE Username: common Date:9/15/2014

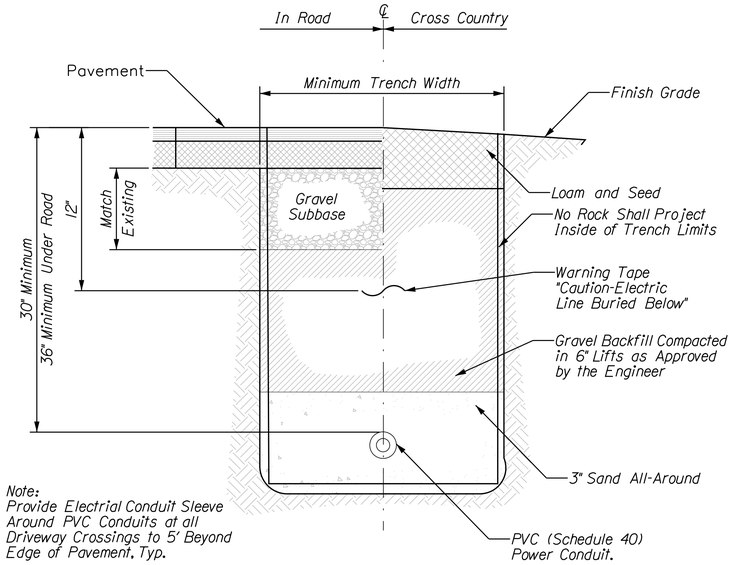

Note:
Provide Electrial Conduit Sleeve Around PVC Conduits at all Driveway Crossings to 5' Beyond Edge of Pavement, Typ.

TYPICAL CONDUIT PLACEMENT TRENCH SECTION

Not To Scale

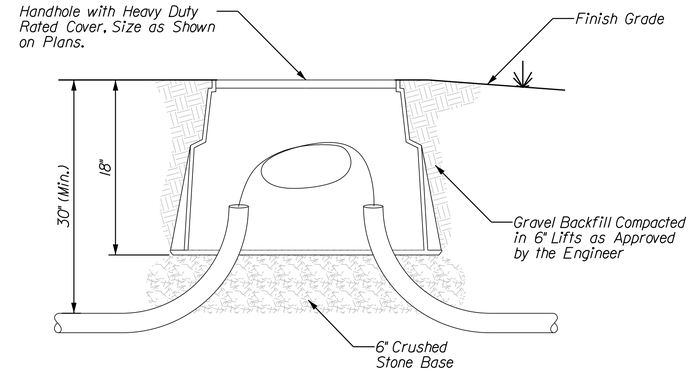

TYPICAL SECTION AT HANDHOLE/JUNCTION BOX HANDHOLE IN GRASS AREAS

Not To Scale

General Notes:

1. All Work Shall Conform to the National Electrical Code (N.E.C.) Latest Edition.
2. Coordinate all Lighting Fixture Locations and Architectural Appurtenances.
3. All Lighting and Power Wiring not in Conduit Shall be Type MC #12 with Ground (Typical) with Number of Conductors as Required.

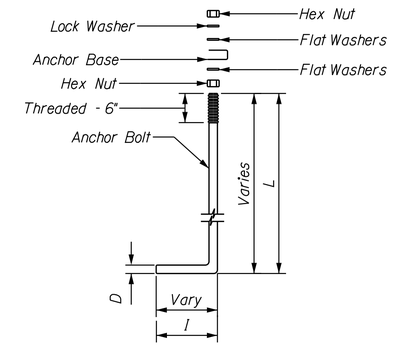

Notes:

1. All Anchor Bolts to be Galvanized.
2. For Mounting Heights Less Than 30 Feet, Use the Anchor Bolt Dimensions as Recommended by the Pole Manufacturer, Length, Hook, Diameter and Bolt Projection.

ANCHOR BOLT ASSEMBLY DETAIL

Not To Scale

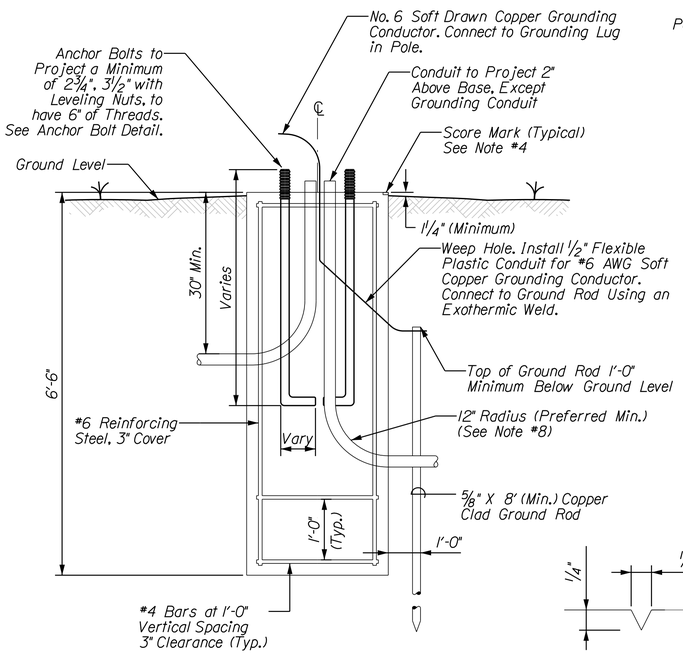

ELEVATION

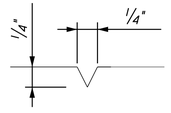

SCORE MARK DETAIL

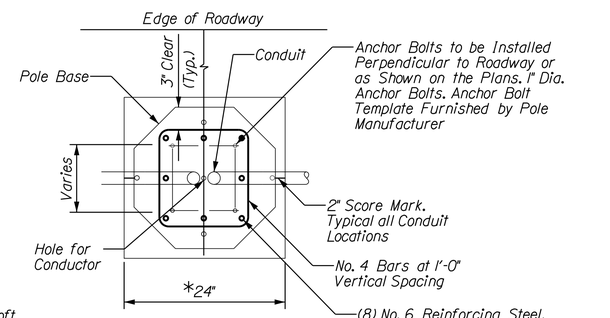

PLAN VIEW

* Use 18"x18" for Fixture Type 'C'

Concrete Base and General Notes:

1. All Concrete Bases to be Concrete Class A, and Shall Have a Smooth Level Top Surface Finished with a ½" Radius Edging Tool.
2. All Reinforcing Steel to Conform to the Requirements for "Reinforcing Steel".
3. Template for Anchor Bolts, Nuts and Washers to be Obtained by Contractor Prior to Construction of Bases.
4. Score Top of Concrete Base to Show Location of Conduit(s).
5. Conduit Size - as Shown on the Plans.
6. All Exposed Metal Hardware Shall be Galvanized or Stainless Steel.
7. If the Electrical Conduit in the Concrete Base is Galvanized Steel, Grounding Bushings Shall be Used.
8. The Minimum radius for Rigid Metallic or Non-Metallic Electrical conduit Shall be Six Times the Inside Diameter of the Conduit.
9. All Light Pole Bases Shall Be Breakaway Type Design.

STANDARD CONCRETE POLE BASE DETAIL

Not To Scale

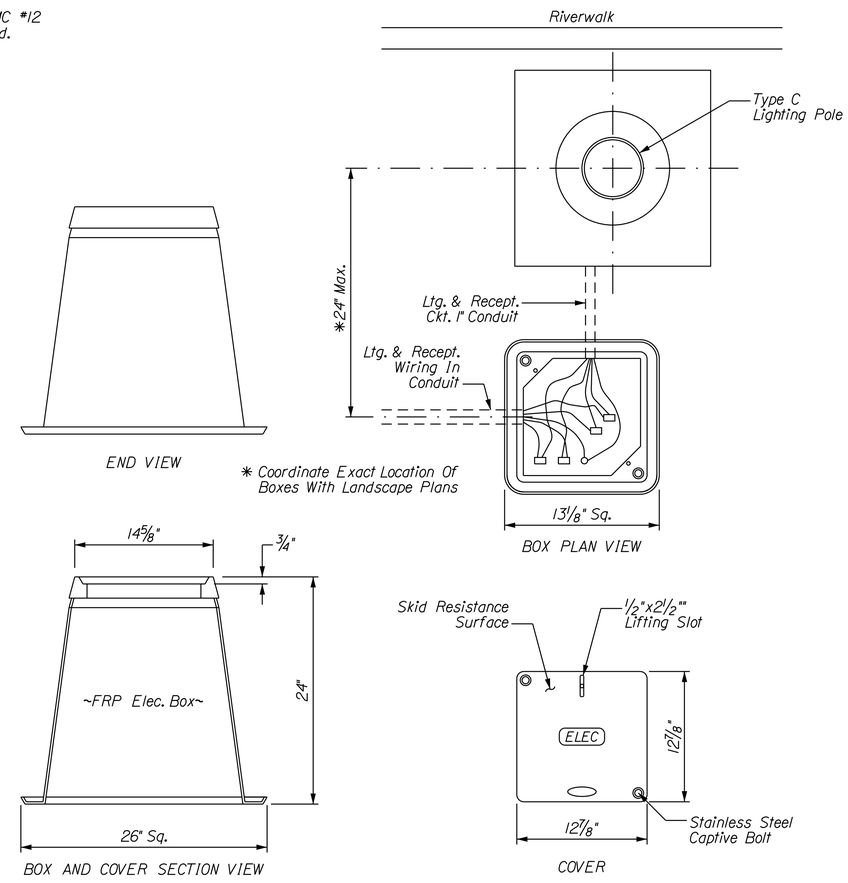

ELECTRICAL BOX DETAIL FOR TYPE C LIGHTING POLE

Not To Scale

Stantec

STATE OF MAINE
DEPARTMENT OF TRANSPORTATION

STP-1928(200)

WIN 19282.00

BRIDGE NO. 5661

BRIDGE PLANS

STATE OF MAINE RICHARD J. NADEAU No. 10553 REGISTERED PROFESSIONAL ENGINEER

PROJ. MANAGER	NATE BENOIT		
DESIGN-DETAILED	MLC	JTS	SEPT 2014
CHECKED-REVIEWED	TWM	MLC/TWM	SEPT 2014
DESIGN2-DETAILED2			
DESIGN3-DETAILED3			
REVISIONS: 1			
REVISIONS: 2			
REVISIONS: 3			
REVISIONS: 4			
FIELD CHANGES			

SIGNATURE

P.E. NUMBER

DATE

BRIDGE STREET BRIDGE
PRESUMPSCOT RIVER
WESTBROOK CUMBERLAND COUNTY

LIGHTING DETAILS 1

SHEET NUMBER

24

OF 74

Filename: ...\024_Lighting_Details_1.dgn Division: BRIDGE Username: common Date:9/15/2014

DESCRIPTION OF COMPONENTS:

TYPE B POLE: Visco #VI-WB21-OCT-21 #SP9075B
TYPE B ARMS: Hadco #SA9075A
TYPE B LUMINAIRE: Hadco #CF14 / #59075B

TYPE C POLE: Visco #VI-WB16-H1-OCT/9"
TYPE C ARMS: Hadco #SA9074A
TYPE C LUMINAIRE: Hadco #CF11 #S9075BA

LENS: Made of clear dome diffuser.

TYPE B LAMP: 250 watt, metal halide, BT 28 bulb, mogul base.
TYPE C LAMP: 150 watt, E17 bulb, medium base.

OPTICS: Precision formed, segmented specular aluminum internal cutoff reflector with horizontal lamp mounting, giving a type 3 (asymmetrical) distributions. Reflector is rotatable in 90° increments.

HOUSING: 413F, Low-Copper cast aluminum. 0.090" thick spun aluminum. Lens frame door shall be a one-piece cast aluminum frame with an integral cast hinge. Weatherproof ballast assembly shall isolate the ballast from water and heat. Decorative fluted aluminum spinning available for ballast housing. All non-ferrous fasteners prevent corrosion and ensure longer life

ARM: Made of 2" Sch 40 pipe with clamp-on collars & twist-lock photo control, see detail for size of collars.

TYPE B BALLAST: 250 watt, MH, high power factor of 90% or better, quadruple tap, 120, 208, 240, 277 volt, wired at 240V (match existing voltage),-30°F (-34°C) lamp starting capacity, c/w quick disconnect plug.
TYPE C BALLAST: 150 watt, MH, high power factor of 90% or better, quadruple tap, 120, 208, 240, 277 volt, wired at 240V (match existing voltage),-30°F (-34°C) lamp starting capacity, c/w quick disconnect plug.

POLE: 11 Gage, 8-3/4" Flat-to-Flat Galvanized Steel Octagonal tapered pole, with .014"/FT Taper, welded to the base. 38" pole extension with 3/16" Wall Steel Tubing.

TYPE B BASE COVER: WB21 27.50" - Made of a two-piece cast iron component, with Removable Access Door, giving access to a ground lug. Seal to pole with silicone sealant per manufactures' instructions.
TYPE C BASE COVER: WB16 10" - Made of a two-piece cast iron component, with Removable Access Door, giving access to a ground lug. Seal to pole with silicone sealant per manufactures' instructions.

BASE: 1" A36 Steel Plate, with 12" Bolt Circle. with (4) 1-1/4" slots.

PHOTOCELL: mount / install in top of bracket arm

WIRING: Included, from luminaire to the bracket, exceeding the latter by a minimum of 6".

GASKETING: Neoprene and/or silicone gasketing is applied.

FINISH: Shall be polyester powder coat paint over a galvanized sub-finish (RAL6005) The Fixtures thermoset polyester powdercoat shall be electrostatically applied after a five-stage conversion cleaning process and bonded by heat fusion thermosetting.

TYPE B: BANNER ARM HARDWARE: (2) 24" LG 1-1/2" SCH. 40 STEEL PIPE.

TYPE C: FLOWER BASKET BRACKET

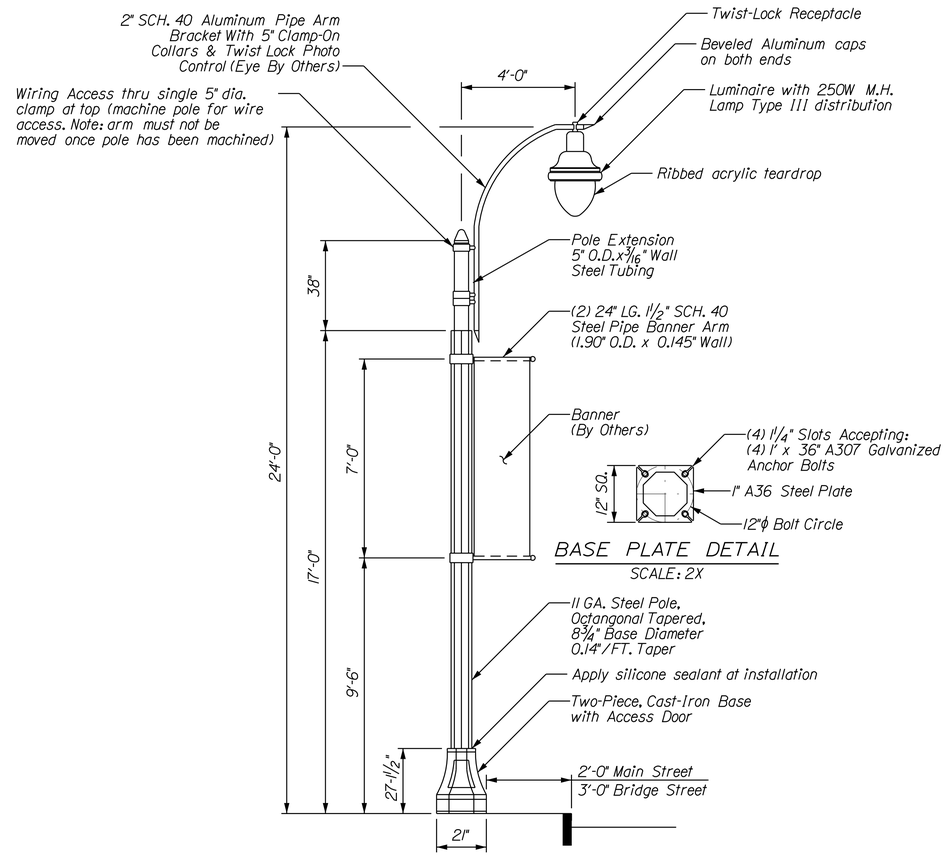

LIGHTING POLE DETAIL - TYPE B
Not To Scale

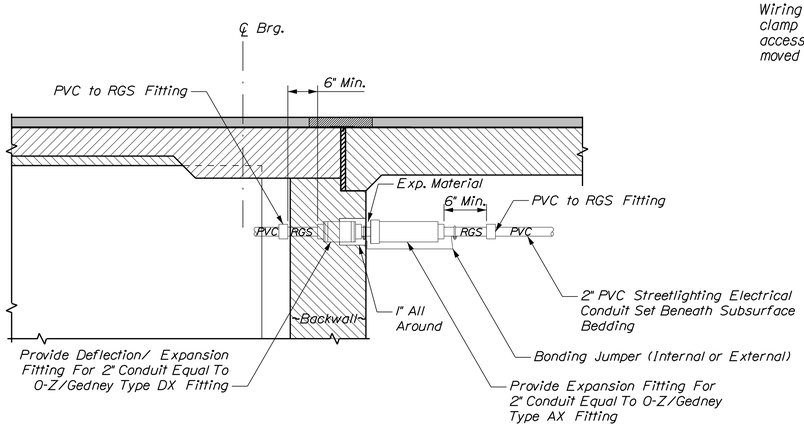

STREET LIGHTING CONDUIT AT BRIDGE TRANSITION

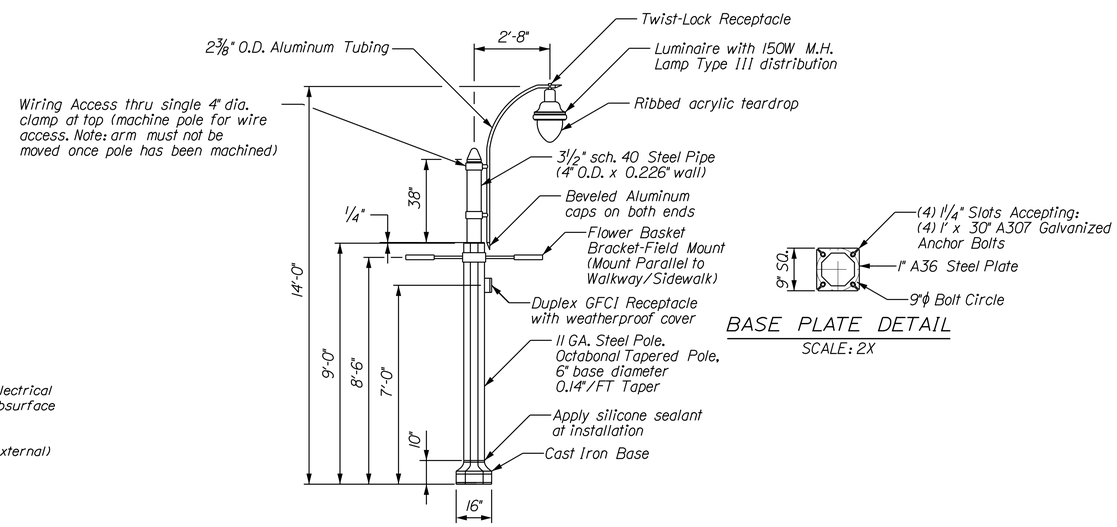

LIGHTING POLE DETAIL - TYPE C
(Type C Similar To Type B)
Not To Scale

Stantec

STATE OF MAINE
DEPARTMENT OF TRANSPORTATION
STP-1928(200)
WIN 19282.00
BRIDGE NO. 5661
BRIDGE PLANS

STATE OF MAINE RICHARD A. NADEAU No. 10553 LICENSED PROFESSIONAL ENGINEER

SIGNATURE			
P.E. NUMBER			
DATE			

PROJ. MANAGER	NATE BENOIT		
DESIGN-DETAILED	MLC	JTS	SEPT 2014
CHECKED-REVIEWED	TWM	MLC/TWM	SEPT 2014
DESIGN2-DETAILED2			
DESIGN3-DETAILED3			
REVISIONS 1			
REVISIONS 2			
REVISIONS 3			
REVISIONS 4			
FIELD CHANGES			

BRIDGE STREET BRIDGE
PRESUMPSCOT RIVER
WESTBROOK CUMBERLAND COUNTY

LIGHTING DETAILS 2

SHEET NUMBER
25
OF 74

Filename: ...\025_Lighting_Details_2.dgn Division: BRIDGE Username: common Date:9/15/2014

SIGNAL TIMING

	Phase 1	Phase 2	Phase 3	Phase 4	Phase 5	Phase 6	Phase 7	Phase 8	Time of Day
Min Green	-	-	-	10	-	5	5	10	-
Extension	-	-	-	3	-	3	3	3	-
Max 1	-	-	-	20	-	30	15	20	All Other
Max 11	-	-	-	30	-	25	15	30	M-F(3-6PM)
Veh Clear	-	-	-	3	-	3	3	3	-
Red Clear	-	-	-	3	-	3	3	3	-
Walk	-	-	-		-	5		5	-
Ped Clear	-	-	-		-	14		19	-
Recall	-	-	-	Soft	-	NONE	NONE	Soft	-
Dual Entry	-	-	-	On	-	Off	Off	On	-
Detector Mode	-	-	-	Presence	-	Presence	Presence	Presence	-
Preemption Priority	-	-	-	2	-	3	2	1	-
Flash	-	-	-	Y	-	R	R	Y	Emergency

Max 11- M-F (3Pm To 6Pm); All Others Times Max 1; Emergency Flash Only

PREFERENTIAL PHASING SEQUENCE

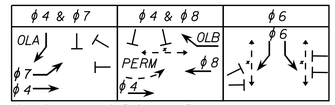

OLA=Overlap A; OLB=Overlap B;
*Normally Dw Upon Push Button Actuation W/Fdw Countdown

EMERGENCY VEHICLE PRE-EMPTION NOTES:

1. Emergency Vehicle Pre-Emption Signals Shall Be Transmitted By Optical Emitters (Provided By Others) Mounted In Emergency Vehicles And Received By Optical Detectors Located At The Intersection.

2. Pre-Emption Signals Shall Be Serviced On A Priority Basis With Receivers Assigned Descending Priorities (R1=Highest, R3=Lowest)

3. In Response To A Pre-Emption Signal Received At An Intersection By An Optical Detector, The Controller Shall Hold Or Advance To And Hold The Emergency Active Phase Green For A Minimum Of 10 Seconds Or Until The Pre-Emption Signal Ceases. The Controller Shall Then Time Pre-Emption Phase Clearance (4.0 Seconds Yellow And 2.0 Seconds All Red) And Service Subsequent Emergency Active Phases As Necessary. At The Completion Of The Pre-Emption Cycle The Controller Shall Time The Pre-Emption Clearance And Resume Normal Signal Operation.

4. Minimum Green And Normal Vehicle Clearance Shall Be Provided On Phases That Are To Be Terminated By Pre-Emption Demand.

5. Confirmation Strobes Shall Be Illuminated Whenever Any Emergency Vehicle Pre-Emption Green Is On.

6. Yield to Pedestrian Blank Out Sign is Not Paid for Separately, but is Incidental to Item No. 643.80 - Traffic Signals at Bridge St. & Main St.

LEGEND

- Proposed Signal Controller With Cabinet
- Proposed Mast Arm With Steel Pole And Foundation
- Proposed Vehicular Head With Louvered Backplate
- Proposed Wire Loop Detector 6'X40' Quadrupole
- Push Button And Informational Sign
- Proposed Pedestal Post And Foundation
- Proposed Pedestrian Signal Head
- Proposed Preemption Receiver (R)
- Proposed Preemption Confirmation Strobe (Cs)
- Proposed Blank Out Sign
- Existing Span Wire Or Mast Arm Mounted Sign
- Proposed Underground Conduit
- PB Proposed Junction Box

SIGNAL INDICATIONS

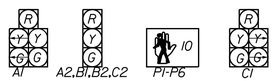

Notes:
1. All Indications Shall Be 12 Inch. All Indications Shall Be Light Emitting Diodes

2. All Signal Heads Provided With 5 Inch Louvered Backplates

SIGNS

R10-12
30" X 36"
A

Sign Information On Aps Push Button
R10-3
9"X15"
(N.T.S.)

30" X 30"
B
Blank Out Sign
(See Note 6)

2032 DESIGN VOLUMES AM (PM)

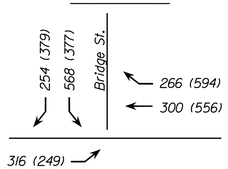

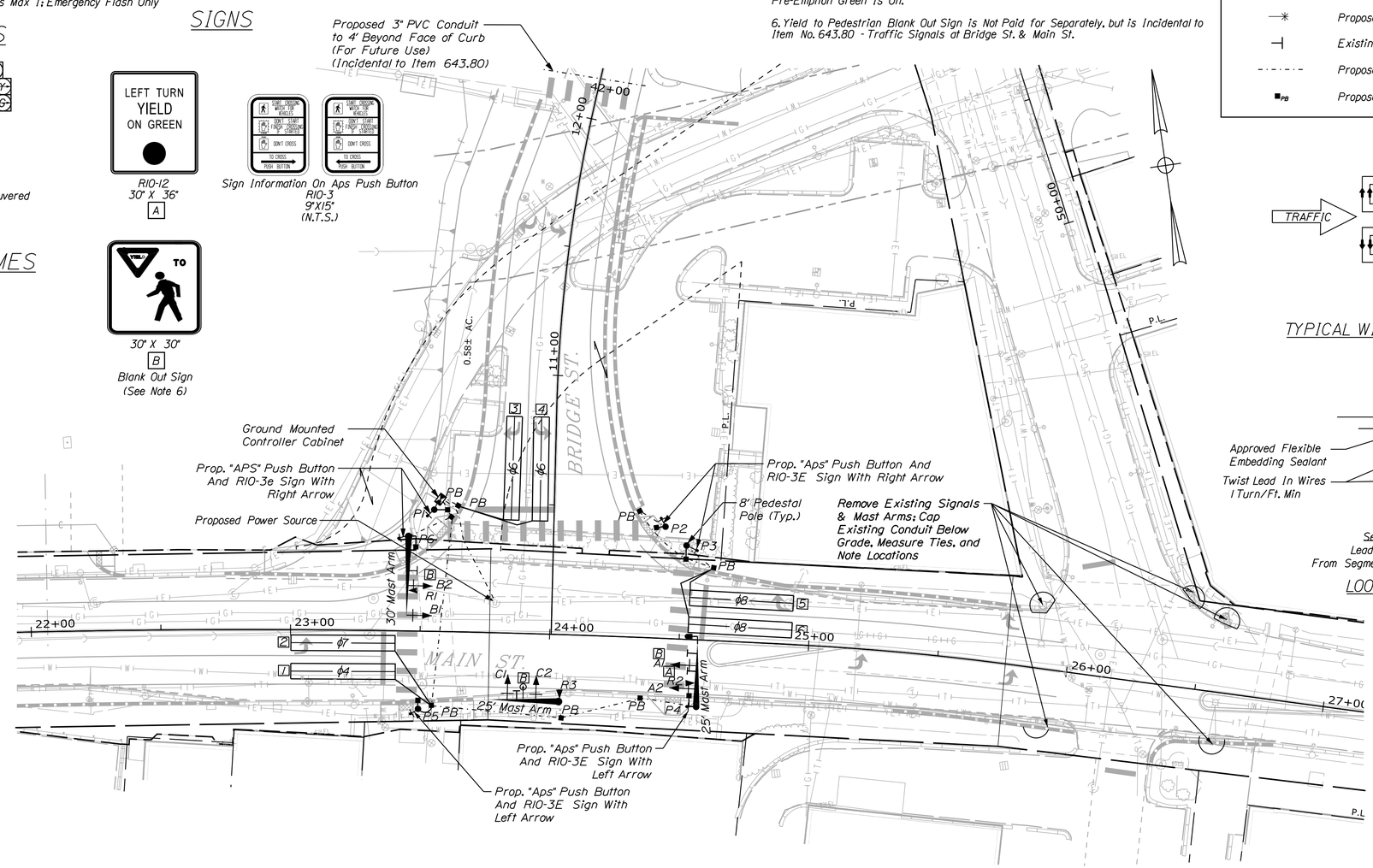

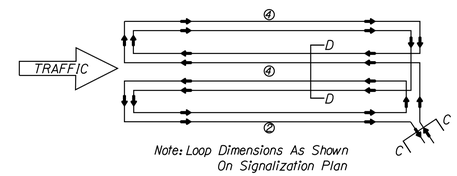

Note: Loop Dimensions As Shown On Signalization Plan

TYPICAL WIRE DIAGRAM FOR QUADRUPOLE LOOP

NTS

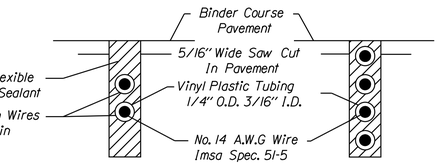

LOOP DETECTOR SEGMENT DETAIL

NTS

DETECTOR SCHEDULE

Detector								Amplifier				Inductance	Continuity	Resistance Loop To Ground
Plan Id.	Street	Direction	Lane	Size	Call	ϕ	Delay	Type	Slot No.	Detector No.	Channel			
1	Main Street	Eastbound	Thru	6'X40'	4		0	Presence	1	1	1			
2	Main Street	Eastbound	Left	6'X40'	7		0	Presence	1	2	2			
3	Bridge Street	Southbound	Right	6'X40'	6		0	Presence	2	3	1			
4	Bridge Street	Southbound	Left	6'X40'	6		0	Presence	2	4	2			
5	Main Street	Westbound	Right	6'X40'	8		0	Presence	3	5	1			
6	Main Street	Westbound	Thru	6'X40'	8		0	Presence	3	6	2			

Record Field Measurements Here

PLAN

25 0 25 50
Scale of Feet

Stantec

STATE OF MAINE
DEPARTMENT OF TRANSPORTATION

STP-1928(200)

WIN 19282.00

BRIDGE PLANS

BRIDGE NO. 5661

STATE OF MAINE DAVID J. DeBAIE No. 5755 REGISTERED PROFESSIONAL ENGINEER

SIGNATURE 5755 P.E. NUMBER 9/4/2014 DATE

PROJ. MANAGER	NATE BENOIT		BY	DATE
DESIGN-DETAILED	DJD		PZA	SEPT 2014
CHECKED-REVIEWED	TPL		DJD/TWM	SEPT 2014
DESIGN2-DETAILED2				
DESIGN3-DETAILED3				
REVISIONS 1				
REVISIONS 2				
REVISIONS 3				
REVISIONS 4				
FIELD CHANGES				

BRIDGE STREET BRIDGE
PRESUMPSCOT RIVER
WESTBROOK CUMBERLAND COUNTY

TRAFFIC SIGNAL PLAN

SHEET NUMBER
26
OF 74

Filename: ...\MSTA\026_Traffic_Plan.dgn Division: BRIDGE Username: common Date:9/3/2014

TRAFFIC SIGNAL NOTES

1. All signal heads shall be equipped with LED lenses 12 inches in diameter with 5-inch louvered back plates.

2. All new signal heads shall be fix mounted to mast arms with astrobrackets.

3. The contractor shall meet all utility requirements for new service connections.

4. All splices will be made in the cabinets meeting MDOT specifications.

5. The bottom of the housing of new signal faces shall be at least 16 feet but not more than 19 feet above the pavement grade at the center of the roadway.

6. Two copies of as-built plans, wiring diagrams, box prints, and equipment manuals shall be left in each of the controller cabinets.

7. The contractor is responsible for finding exact locations of utilities prior to construction. The contractor shall contact dig-safe and appropriate authorities prior to any subsurface activities.

8. Traffic signal work shall be completed in a manner and order that will cause the minimum disruption to traffic. Existing signal operations shall remain in service until the new signal Controller is ready to go online.

9. The engineer and MDOT shall have the right and authority to determine the acceptability of work and materials in progress or completed and shall have the right to reject any work or materials which do not conform, in its sole opinion, to the plans or specifications.

10. All signing, signal, and striping materials and placement shall conform to the MDOT standard specifications, supplemental specifications, standard details, and with the Federal Highway Administration "Manual on Uniform Traffic Control Devices" (MUTCD).

11. Any relocations or adjustments of utility facilities will be made by the respective utilities in coordination with the work of the contractor.

12. Contractor shall be responsible for obtaining any necessary opening permits.

13. Maintenance of traffic shall be per the MUTCD.

14. Driveway and pedestrian accesses shall be maintained at all times.

15. The contractor shall provide the engineer, MDOT, and the City of Westbrook with a schedule of work for constructing the traffic improvements prior to the commencement of work.

16. All material schedules shown on the plans are for general information only. The contractor shall prepare his own material schedules based upon his plan review. All schedules shall be verified in the field by the contractor prior to ordering materials or performing work.

17. All non-paved areas disturbed during construction shall be loamed and seeded with method No. 1, unless otherwise directed by the owner, and this cost shall be incidental to other work items. All paved areas disturbed during construction shall be repaired at the contractor's expense.

18. Equipment:

Controller equipment:

- Controller shall be fully compatible with the existing Naztec Streetwise ATMS software installed on the traffic server located at the WestBrook Public Safety building. Controller shall be compatible with both Naztec and NTCIP protocols.
- All major components of the controller cabinet assembly shall be from the same manufacturer; this includes cabinet assembly, controller, MMU, bus, and cabinet power supply.
- Traffic control cabinets shall be Naztec Model P44 TS2 Type I series only Base mounted with a 15" extension base.
- Traffic controller shall be Naztec Model 980 E TS2 Type I series with Ethernet port.
- Malfunction management units shall be Naztec Model MMU 516L with LCD screen, keypad and communications port only. The RS232 communications port shall be compatible with the P-2 port on the Naztec controller and with the CMU/MMU interface in streetwise ATMS.
- Bus interface units shall be Naztec Model BIU-130 only.
- Cabinet power supply shall be Naztec Model TS2-CAB-PS only.
- The traffic control cabinet shall also include a TS2 SDLC frame grabber device for advanced diagnostics. The frame grabber device shall be ATSI Model FGR-1000 only.

Detection equipment:

- All loops shall be quadrupole loops.
- Loop amplifiers with LCD shall provide a secondary count output in addition to each presence output.
- All loop wires to be brought back to the controller on separate Lead-in cables.

Communications equipment:

Encom wireless broadband system capable of communicating to the Public Safety Building through the William Clark Drive fiber optic interconnection and via the new connection from the Main Street and New Bridge Street intersection with wire loop detection to the Mechanic Street and William Clark Drive controller cabinet.

Optical preemption equipment:

- Optical preemption equipment shall be fully compatible with Tomar secure emitters.
- Contractor to coordinate with fire department on final location of optical preemption equipment. Optical preemption equipment shall be fully compatible with the Tomar Ospsoft IP software installed on the traffic server located at the Westbrook Public Safety Building.
- Optical signal processor Card shall be Tomar Model 3140 series only.
- OSP device shall be Wavetronix Click! Model 301 daily.
- Card cage shall be Tomar Model 1881 Only.
- Optical detector shall be Tomar Model 2090-SD or 2091-ST only.
- Confirmation strobe shall be Tomar Model 804-110-R only. Truck emitters shall not be provided as part of this project.

Vehicle Signal Equipment:

- Vehicle signal housings shall be McCain Model MTSTA or MTSTP Series only (black finish)
- Vehicle signal housings shall include backplates (Black finish).
- LED Modules for vehicle indications shall be GE lamination RXII series only.

Pedestrian Signal Equipment:

- Pedestrian signal housings shall be McCain Model 1000 series 18"x16" only (black finish).
- LED countdown modules for pedestrian indications shall be GE lamination GTI series only.
- Accessible pedestrian signal (APS) pushbuttons with signs and tones shall be Campbell Company advisor Model A-57 Only.

Traffic Structures:

- Mast arms shall be Valmont SM16 or CB16 series or approved equal.

19. System Acceptance Testing:
- It is expected that the complete system shall operate fully functional for a period of 30 consecutive days without malfunction. Minor malfunctions of inoperability not the fault of the contractor, as judged by the engineer, are not included in the 30-day period. If the system fails to operate as intended or the supplier's claims, the malfunction shall be corrected by the contractor at its cost and a new 30-day testing period shall begin. This process shall continue until a completely operable system is demonstrated for a consecutive 30-day period.
- Acceptance testing must demonstrate to the engineer's reasonable satisfaction that the hardware and licensed software function in accordance with the specifications, requirements, through-puts, functionalities, performance criteria or other benefits stated in documentation, promotional materials, proposals, and/or demonstrations given to MDOT and the City of Westbrook.

20. Payment for the traffic signal work shall be as outlined in Special Provision 643.

21. Salvage Rights: The City of Westbrook shall have First rights to all existing street lights and traffic signal equipment (Contact Doug Eaton 207-854-0660). The MDOT shall have Second salvage rights to all controller equipment (Contact Mike Delois 207-854-3625). The contractor shall carefully remove these items and store them at a central location on site for engineer's inspection and final removal from the site. The storage location shall be secure and all control equipment removed that has computer chip technology shall be stored in an interior heated environment. Any removed material not claimed by MDOT or the City of Westbrook shall be removed from the site by the contractor and appropriately disposed when directed by the engineer. Removal, loading, transporting, and unloading of the traffic signal equipment and street lights shall be incidental to the traffic signal and highway lighting items.

22. The contractor shall be responsible for submitting red-line as-built drawings of the final work to the engineer. Those drawings shall be on a clean set of plans showing all changes or modifications to the bid plans. Payment for this effort will be considered incidental to other items. Final payment for this project will not be made until these plans are received by the engineer.

23. Exact location of proposed poles, cabinet foundations, and pedestal poles to be verified with the engineer prior to installation.

24. The contractor will be responsible for the relocation of power meters if required. This work will be incidental to Item 643.80 as applicable to the location of the work.

25. The contractor shall perform the work in a manner that will require the least amount of downtime to the traffic signal operations.

26. City of Westbrook shall supply GIS information for this intersection to the contractor.

27. All traffic signal impacts during construction shall be mitigated by the contractor. The contractor shall relocate existing traffic signal heads for each construction stage as needed. Traffic signal heads shall align with the corresponding traffic lane all other impacts such as loop detectors shall also be mitigated. This work shall be incidental to Item 652.361. All mitigation must be approved by the resident.

28. The City shall pay all CMP charges relating to new service connection.

29. The Contractor shall be responsible for final structural design of the signal support structures and the connection of the support structures to their foundations. All designs shall be prepared and stamped by a Professional Engineer licensed in the State of Maine. Design computations, including design loads (overturning moment, torsion, shear force, and axial load) at the top of the foundations, and shop drawings shall be submitted for approval by the Department. No materials shall be ordered or fabricated until the design has been approved.

30. Foundations shall consist of cast-in-place reinforced concrete drilled shafts; one new drilled shaft per mast arm or dual purpose pole as set forth in Special Provision 643. Foundation sizes shall be selected by the Contractor based upon actual computed bending moments and torsion in accordance with Special Provision 643. Actual design loads at the top of the foundation that are provided by the contractor as part of their structural submittal will be used by the Department to check the specified size of the drilled shafts.

Stantec

STATE OF MAINE
DEPARTMENT OF TRANSPORTATION
STP-1928(200)
BRIDGE NO. 5661 WIN 19282.00 BRIDGE PLANS

STATE OF MAINE DAVID J. DeBAIE No. 5755 REGISTERED PROFESSIONAL ENGINEER

SIGNATURE
5755
P.E. NUMBER
9/4/2014
DATE

PROJ. MANAGER	NATE BENOIT	BY	DATE
DESIGN-DETAILED	DJD	PZA	SEPT 2014
CHECKED-REVIEWED	TPL	DJD/TWM	SEPT 2014
DESIGN2-DETAILED2			
DESIGN3-DETAILED3			
REVISIONS 1			
REVISIONS 2			
REVISIONS 3			
REVISIONS 4			
FIELD CHANGES			

BRIDGE STREET BRIDGE
PRESUMPSCOT RIVER
WESTBROOK CUMBERLAND COUNTY

TRAFFIC SIGNAL NOTES

SHEET NUMBER
27
OF 74

Filename: ...\027_Traffic SignalNotes.dgn Division: BRIDGE Username: common Date:9/3/2014

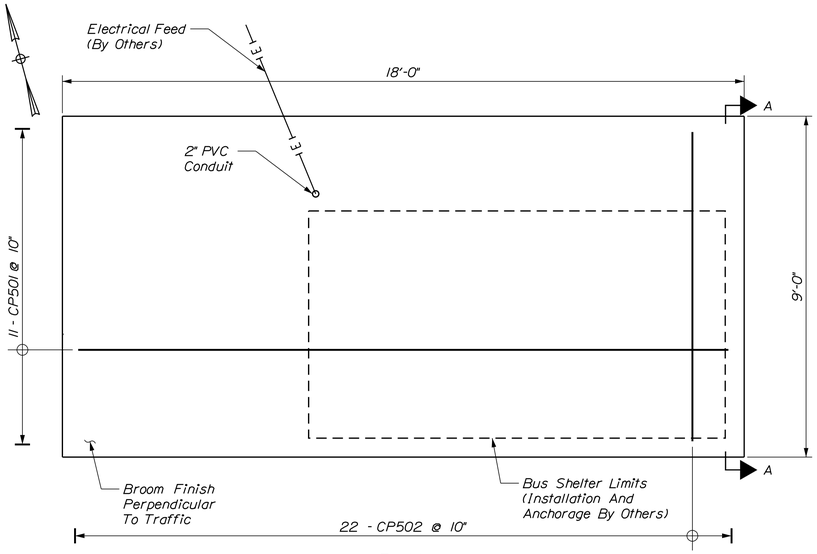

PLAN

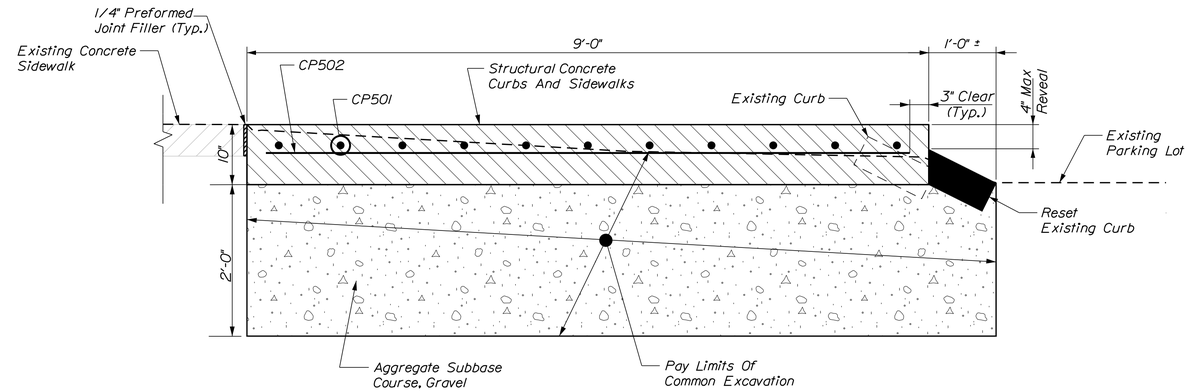

SECTION A-A

REINFORCING SCHEDULE				
NO. PIECES	SIZE	LENGTH	MARK	TYPE
11	5	17'-6"	CP501	STR.
22	5	8'-6"	CP502	STR.

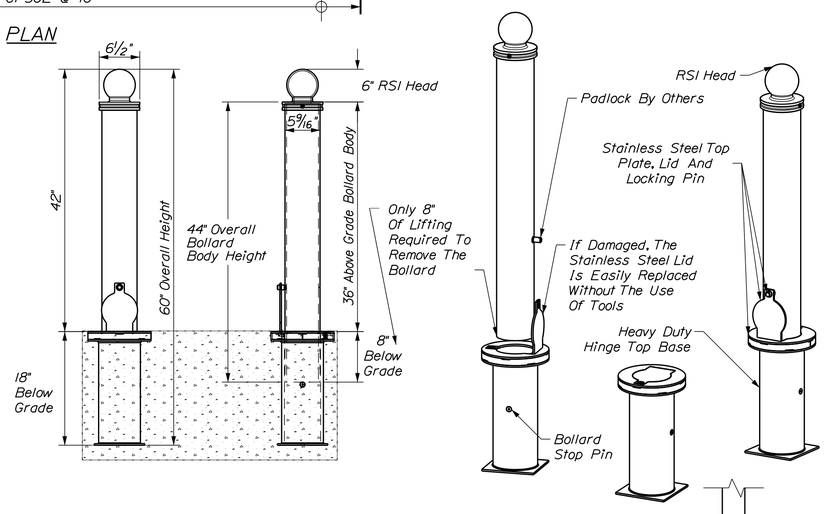

REMOVABLE BOLLARD

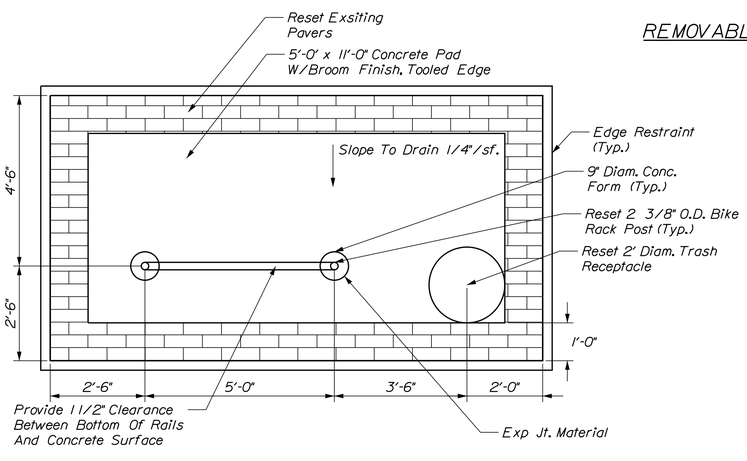

BIKE RACK/TRASH RECEPTACLE: ON CONCRETE PAD

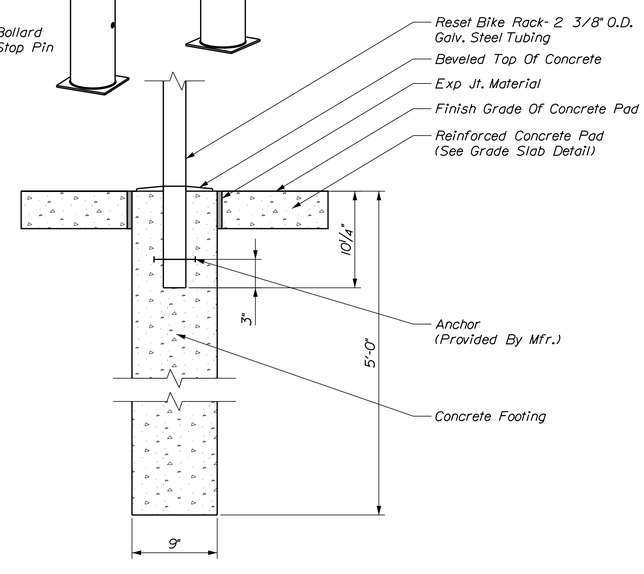

BIKE RACK MOUNTING DETAIL

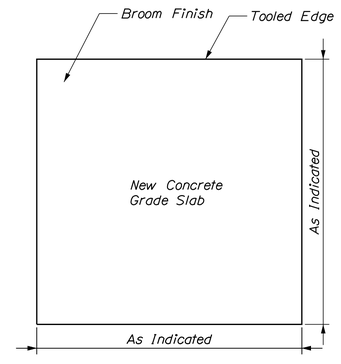

PLAN

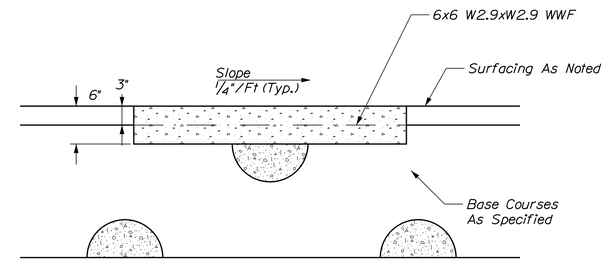

SECTION

GRADE SLAB DETAIL

Stantec

STATE OF MAINE
DEPARTMENT OF TRANSPORTATION

STP-1928(200)

WIN 19282.00

BRIDGE NO. 5661

BRIDGE PLANS

SIGNATURE

P.E. NUMBER

DATE

		BY	DATE
PROJ. MANAGER	NATE BENOIT		
DESIGN-DETAILED	MED	MED	SEPT 2014
CHECKED-REVIEWED	TWM	TWM	SEPT 2014
DESIGN2-DETAILED2			
DESIGN3-DETAILED3			
REVISIONS 1			
REVISIONS 2			
REVISIONS 3			
REVISIONS 4			
FIELD CHANGES			

BRIDGE STREET BRIDGE
PRESUMPSCOT RIVER
WESTBROOK CUMBERLAND COUNTY

CONCRETE PAD AND
BOLLARD DETAILS

SHEET NUMBER
28
OF 74

Filename: ...\MSTA\028_Bus_Shelter.dgn Division: BRIDGE Username: common Date:9/15/2014

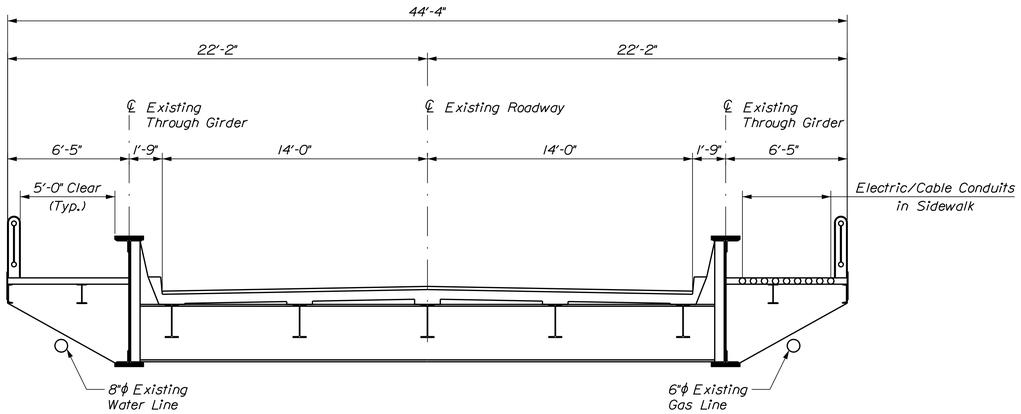

EXISTING BRIDGE SECTION

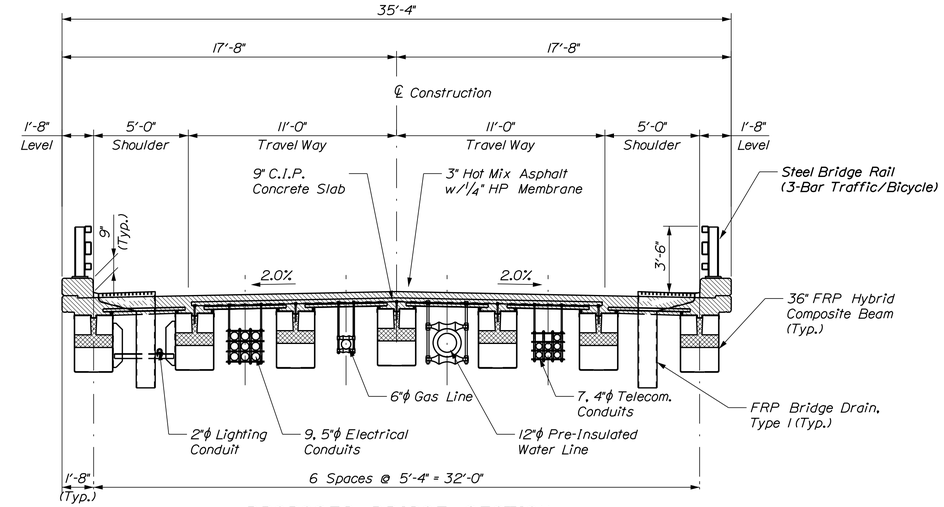

PROPOSED BRIDGE SECTION

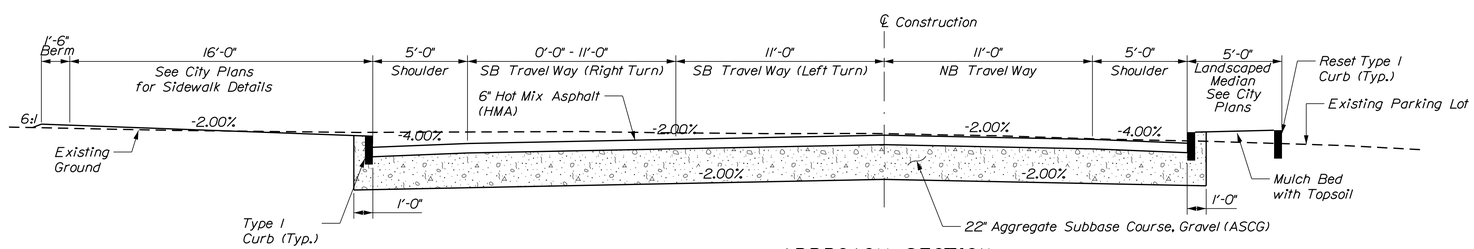

APPROACH SECTION

STATION 10+25 TO 12+42

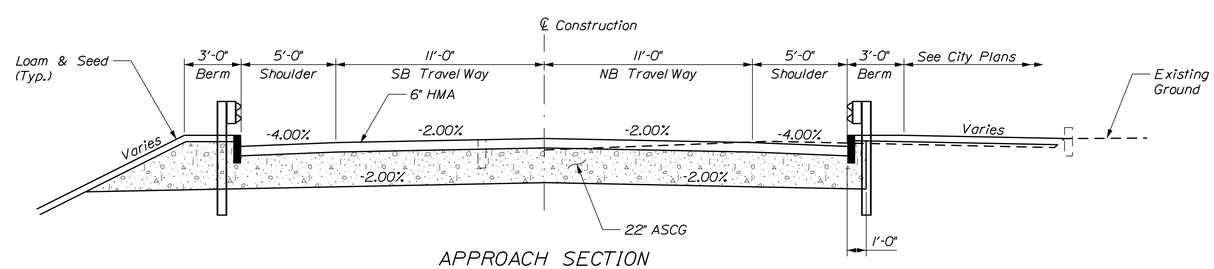

APPROACH SECTION

STATION 14+02 TO 15+50

Stantec

STATE OF MAINE
DEPARTMENT OF TRANSPORTATION

STP-1928(200)

WIN 19282.00

BRIDGE NO. 5661

BRIDGE PLANS

PROJ. MANAGER	NATE BENOIT		
DESIGN-DETAILED	DOT	JTS	SEPT 2014
CHECKED-REVIEWED	TWM	TPL/TWM	SEPT 2014
DESIGN2-DETAILED2	TPL	PZA	SEPT 2014
DESIGN3-DETAILED3			
REVISIONS 1			
REVISIONS 2			
REVISIONS 3			
REVISIONS 4			
FIELD CHANGES			

SIGNATURE

P.E. NUMBER

DATE

BRIDGE STREET BRIDGE
PRESUMPSCOT RIVER
WESTBROOK CUMBERLAND COUNTY

TYPICAL SECTIONS

SHEET NUMBER

29

OF 74

Filename: ...\00\BRIDGE\MSTA\029_Typ.dgn Division: BRIDGE Username: common Date:9/15/2014

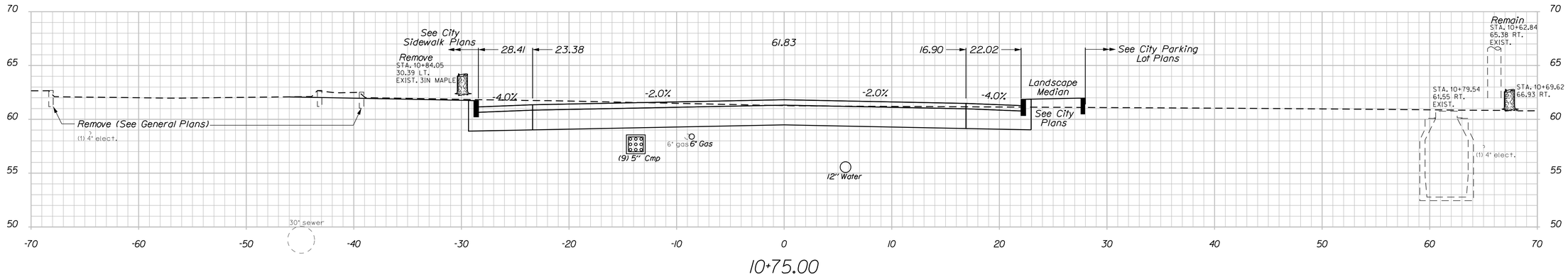

10+75.00

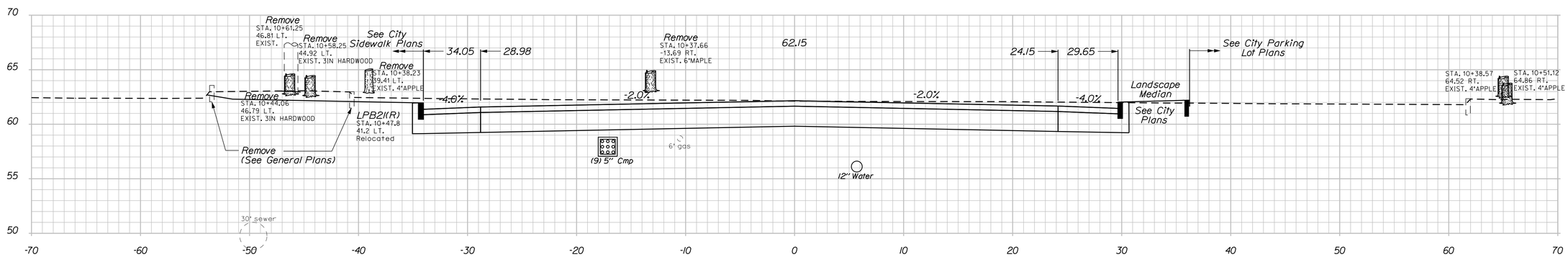

10+50.00

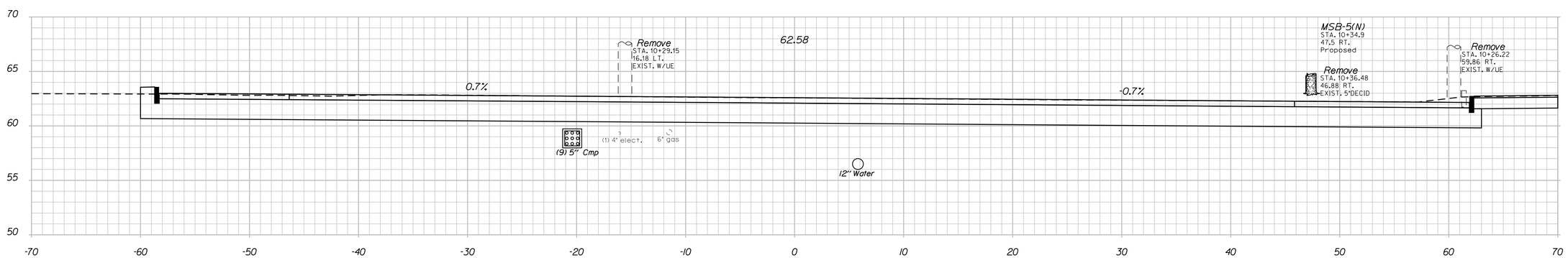

10+25.00

STATE OF MAINE
DEPARTMENT OF TRANSPORTATION

STP-1928(200)

WIN 19282.00

BRIDGE NO. 5661

BRIDGE PLANS

SIGNATURE

P.E. NUMBER

DATE

PROJ. MANAGER	NATE BENOIT	BY	DATE
DESIGN-DETAILED	ISM	PZA	SEPT 2014
CHECKED-REVIEWED	TPL	TPL/TWM	SEPT 2014
DESIGN2-DETAILED2			
DESIGN3-DETAILED3			
REVISIONS 1			
REVISIONS 2			
REVISIONS 3			
REVISIONS 4			
FIELD CHANGES			

BRIDGE STREET BRIDGE
PRESUMPSCOT RIVER
WESTBROOK CUMBERLAND COUNTY

CROSS SECTIONS

SHEET NUMBER

30

OF 74

Filename: ...\00\BRIDGE\MSTA\030_XSECT_1.dgn Division: BRIDGE Username: common Date:9/15/2014

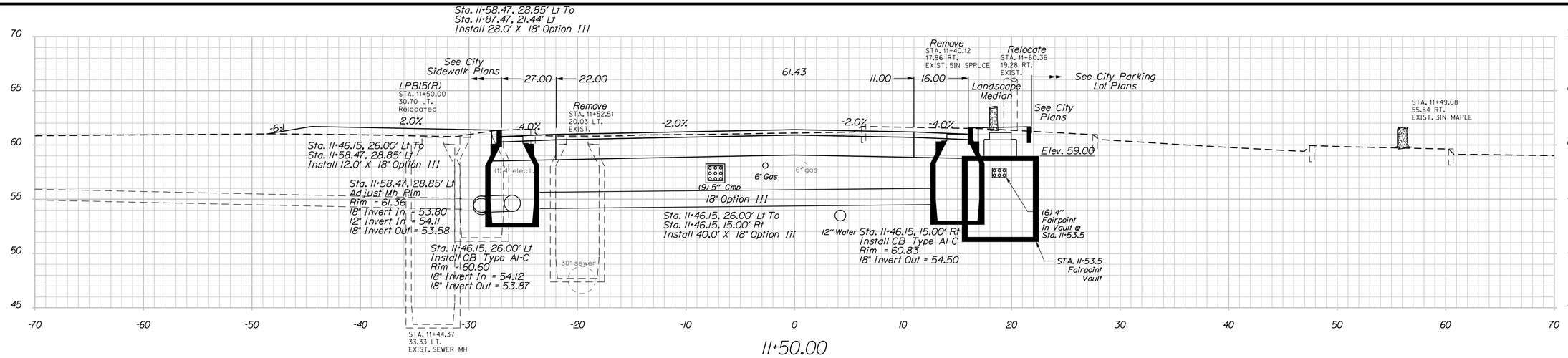

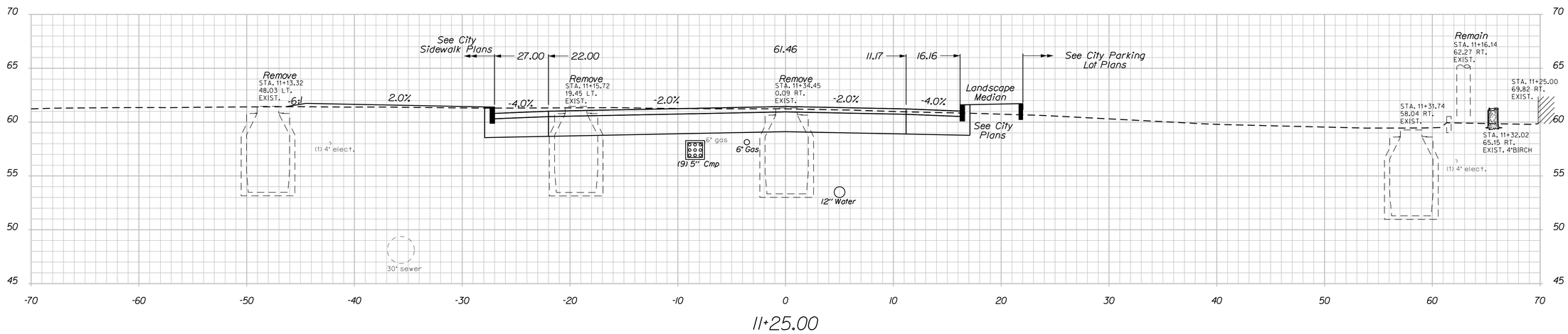

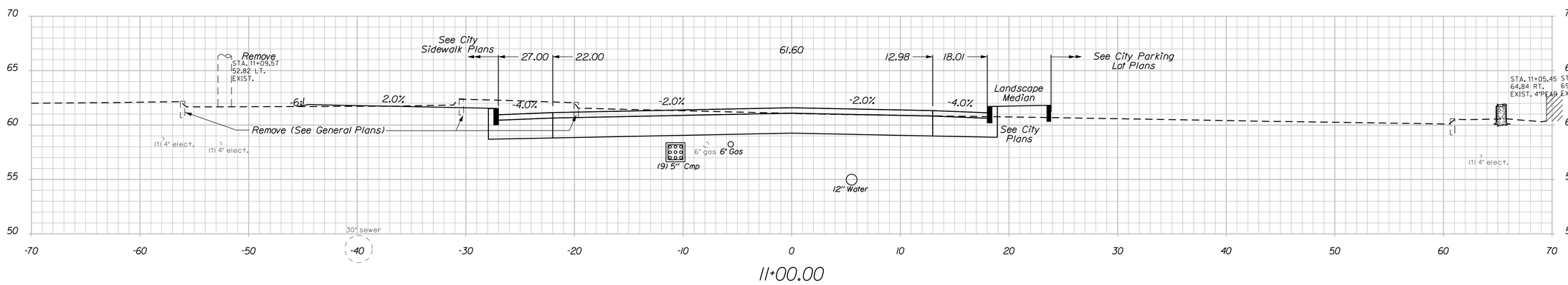

STATE OF MAINE
DEPARTMENT OF TRANSPORTATION

STP-1928(200)

WIN 19282.00

BRIDGE NO. 5661

BRIDGE PLANS

PROJ. MANAGER	NATE BENOIT	BY	DATE
DESIGN-DETAILED	ISM	PZA	SEPT 2014
CHECKED-REVIEWED	TPL	TPL/TWM	SEPT 2014
DESIGN2-DETAILED2			
DESIGN3-DETAILED3			
REVISIONS 1			
REVISIONS 2			
REVISIONS 3			
REVISIONS 4			
FIELD CHANGES			

SIGNATURE

P.E. NUMBER

DATE

BRIDGE STREET BRIDGE
PRESUMPSCOT RIVER
WESTBROOK CUMBERLAND COUNTY

CROSS SECTIONS

SHEET NUMBER

31

OF 74

Filename: ...\00\BRIDGE\MSTA\031_XSECT_2.dgn Division: BRIDGE Username: common Date:9/15/2014

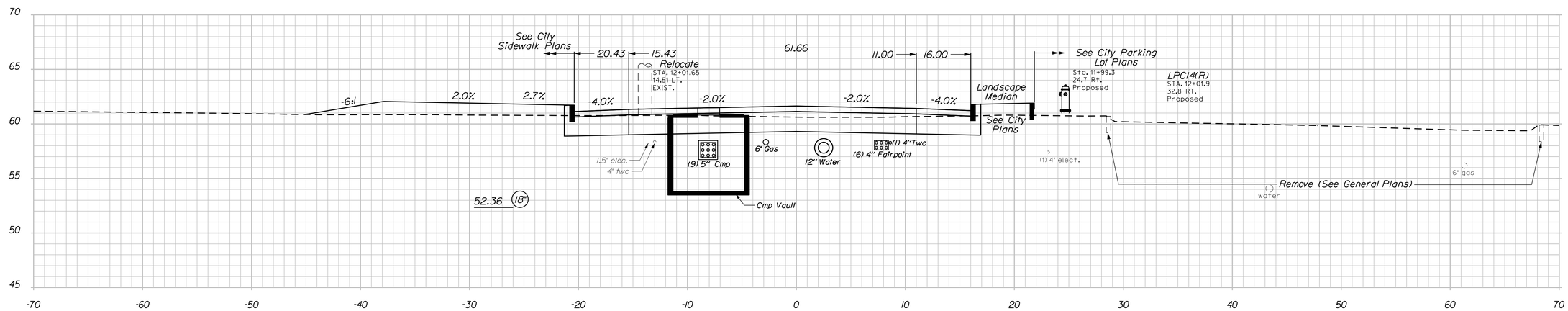

12+00.00

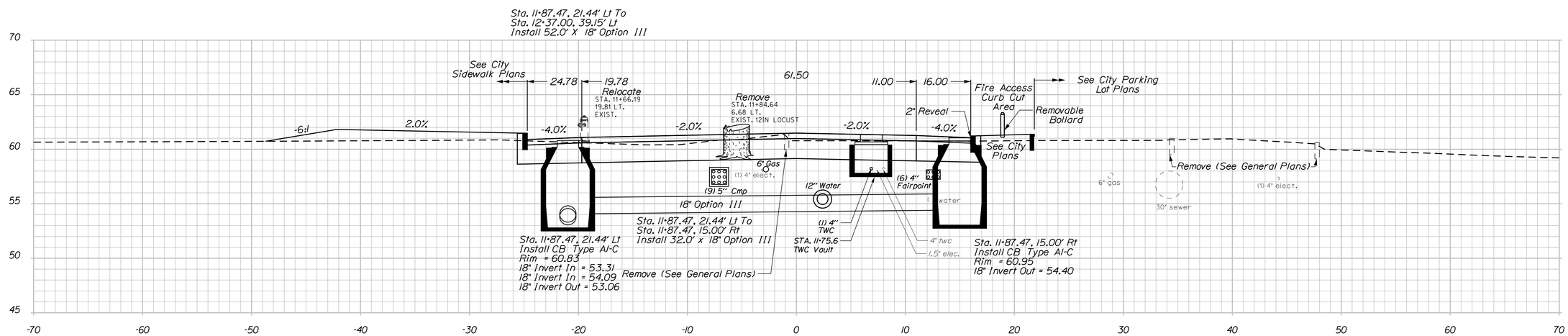

11+75.00

STATE OF MAINE
DEPARTMENT OF TRANSPORTATION

STP-1928(200)

WIN 19282.00

BRIDGE NO. 5661

BRIDGE PLANS

PROJ. MANAGER	NATE BENOIT			
DESIGN-DETAILED	ISM	PZA	SEPT 2014	
CHECKED-REVIEWED	TPL	TPL/TWM	SEPT 2014	
DESIGN2-DETAILED2				
DESIGN3-DETAILED3				
REVISIONS 1				
REVISIONS 2				
REVISIONS 3				
REVISIONS 4				
FIELD CHANGES				

SIGNATURE

P.E. NUMBER

DATE

BRIDGE STREET BRIDGE
PRESUMPSCOT RIVER
WESTBROOK CUMBERLAND COUNTY

CROSS SECTIONS

SHEET NUMBER

32

OF 74

Filename: ...\00\BRIDGE\MSTA\032_XSECT_3.dgn Division: BRIDGE Username: common Date:9/15/2014

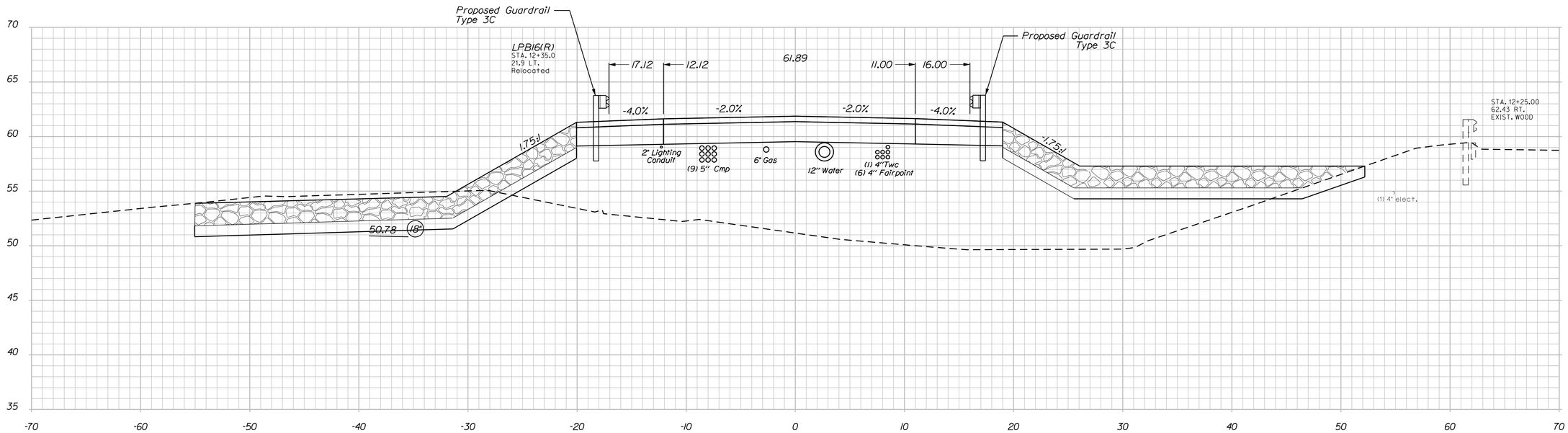

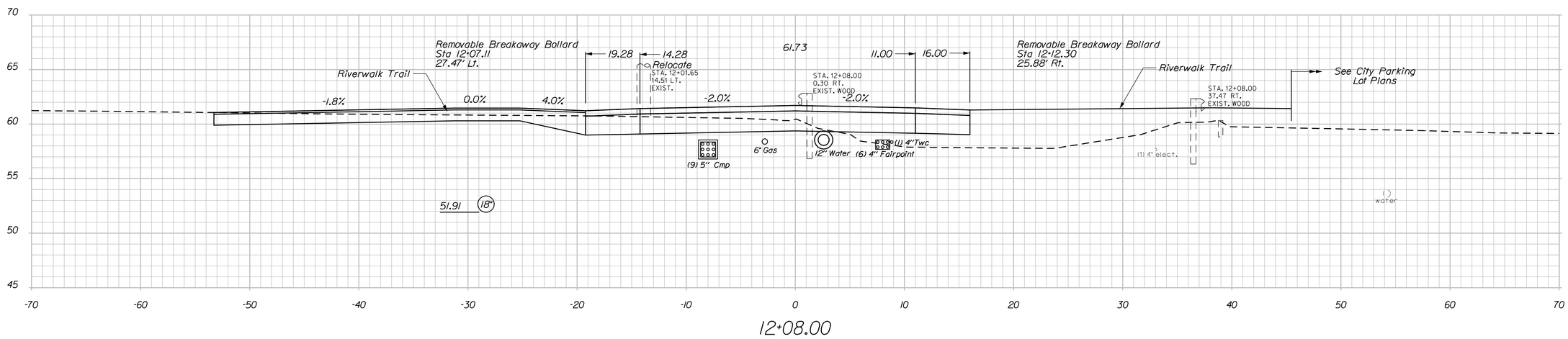

STATE OF MAINE
DEPARTMENT OF TRANSPORTATION

STP-1928(200)

WIN 19282.00

BRIDGE NO. 5661

BRIDGE PLANS

PROJ. MANAGER	NATE BENOIT	BY	DATE
DESIGN-DETAILED	ISM	PZA	SEPT 2014
CHECKED-REVIEWED	TPL	TPL/TWM	SEPT 2014
DESIGN2-DETAILED2			
DESIGN3-DETAILED3			
REVISIONS 1			
REVISIONS 2			
REVISIONS 3			
REVISIONS 4			
FIELD CHANGES			

SIGNATURE

P.E. NUMBER

DATE

BRIDGE STREET BRIDGE
PRESUMPSCOT RIVER
WESTBROOK CUMBERLAND COUNTY

CROSS SECTIONS

SHEET NUMBER

33

OF 74

Filename: ...\00\BRIDGE\MSTA\033_XSECT_4.dgn Division: BRIDGE Username: common Date:9/15/2014

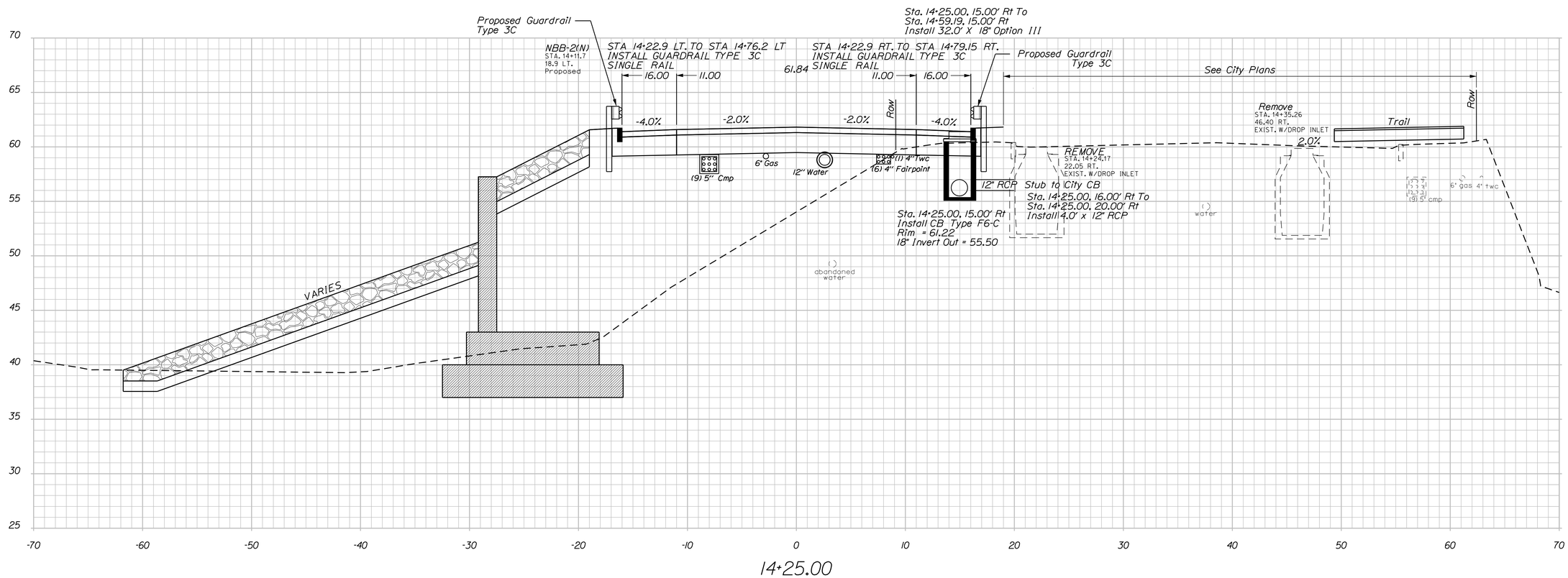

STATE OF MAINE
DEPARTMENT OF TRANSPORTATION

STP-1928(200)

WIN 19282.00

BRIDGE NO. 5661

BRIDGE PLANS

		BY	DATE
PROJ. MANAGER	NATE BENOIT		
DESIGN-DETAILED	ISM	PZA	SEPT 2014
CHECKED-REVIEWED	TPL	TPL/TWM	SEPT 2014
DESIGN2-DETAILED2			
DESIGN3-DETAILED3			
REVISIONS 1			
REVISIONS 2			
REVISIONS 3			
REVISIONS 4			
FIELD CHANGES			

SIGNATURE

P.E. NUMBER

DATE

BRIDGE STREET BRIDGE
PRESUMPSCOT RIVER
WESTBROOK CUMBERLAND COUNTY

CROSS SECTIONS

SHEET NUMBER

34

OF 74

Filename: ...\00\BRIDGE\MSTA\034_XSECT_5.dgn Division: BRIDGE Username: common Date:9/19/2014

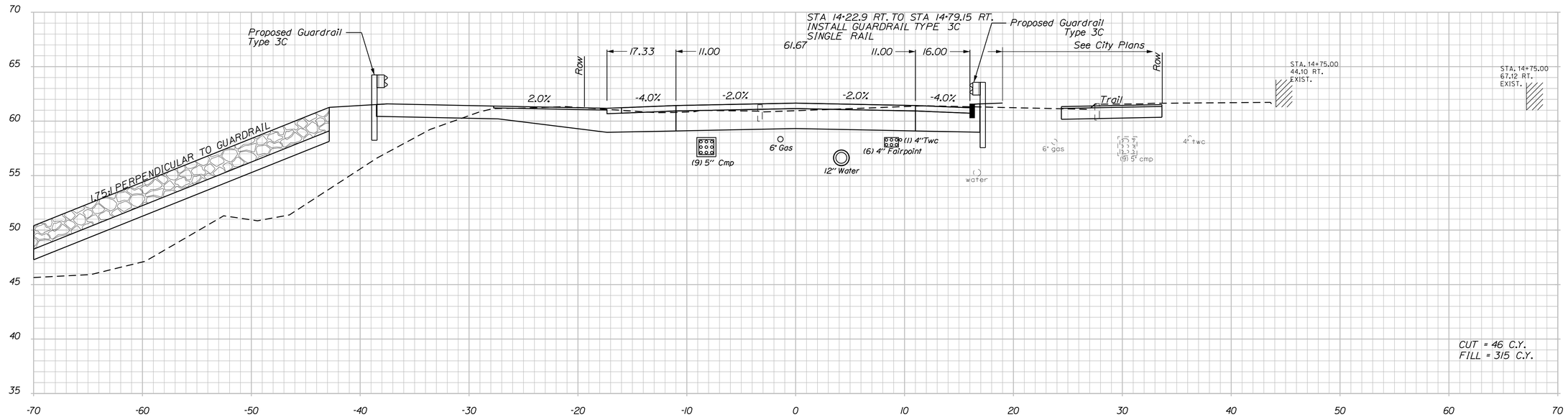

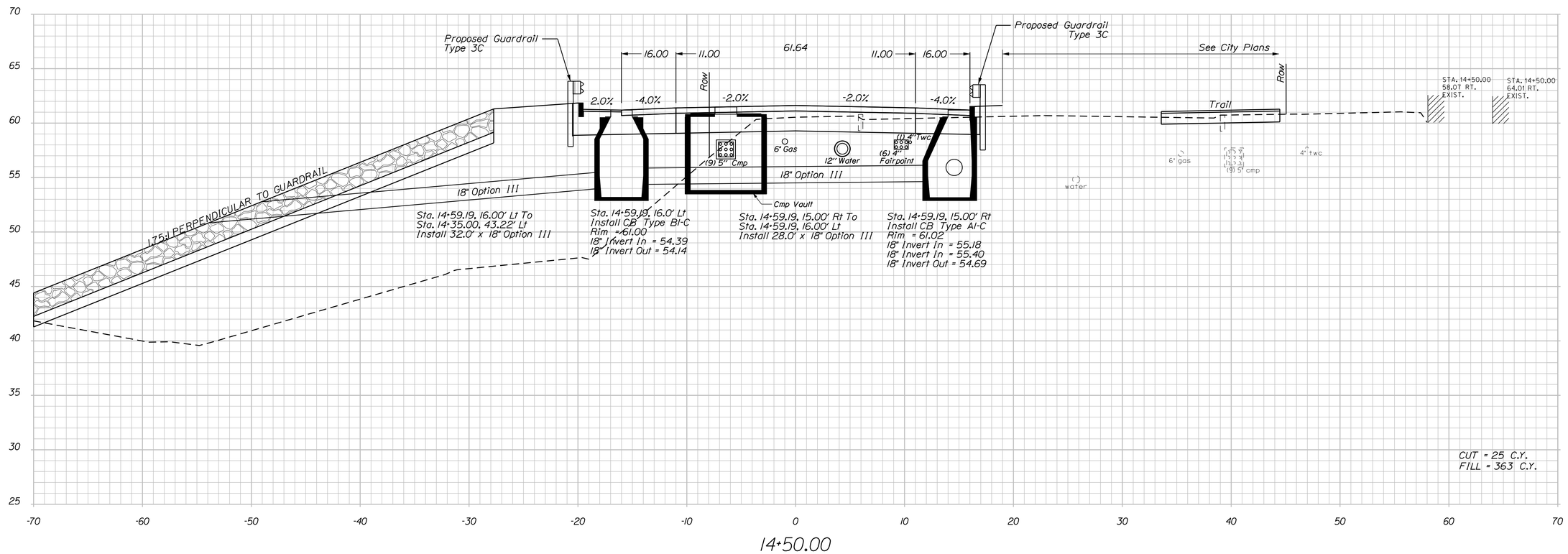

STATE OF MAINE
DEPARTMENT OF TRANSPORTATION

STP-1928(200)

WIN 19282.00

BRIDGE NO. 5661

BRIDGE PLANS

		BY	DATE
PROJ. MANAGER	NATE BENOIT		
DESIGN-DETAILED	ISM	PZA	SEPT 2014
CHECKED-REVIEWED	TPL	TPL/TWM	SEPT 2014
DESIGN2-DETAILED2			
DESIGN3-DETAILED3			
REVISIONS 1			
REVISIONS 2			
REVISIONS 3			
REVISIONS 4			
FIELD CHANGES			

SIGNATURE

P.E. NUMBER

DATE

BRIDGE STREET BRIDGE
PRESUMPSCOT RIVER
WESTBROOK CUMBERLAND COUNTY

CROSS SECTIONS

SHEET NUMBER

35

OF 74

Filename: ...\00\BRIDGE\MSTA\035_XSECT_6.dgn Division: BRIDGE Username: common Date:9/19/2014

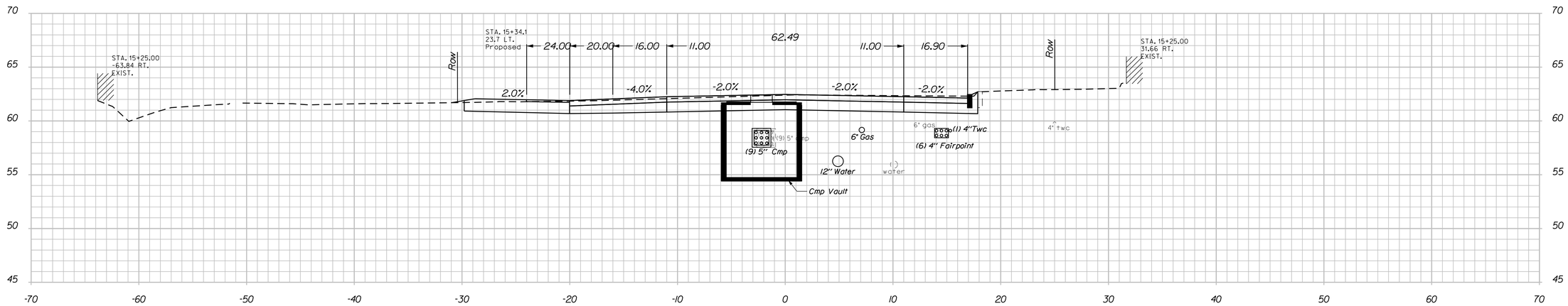

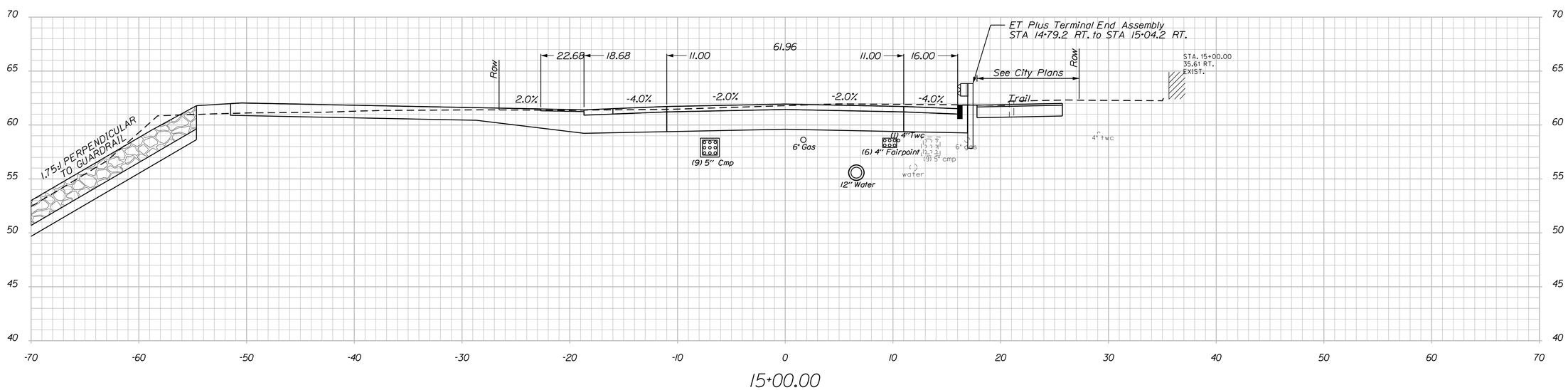

STATE OF MAINE
DEPARTMENT OF TRANSPORTATION

STP-1928(200)

WIN 19282.00

BRIDGE NO. 5661

BRIDGE PLANS

		BY	DATE
PROJ. MANAGER	NATE BENOIT		
DESIGN-DETAILED	ISM	PZA	SEPT 2014
CHECKED-REVIEWED	TPL	TPL/TWM	SEPT 2014
DESIGN2-DETAILED2			
DESIGN3-DETAILED3			
REVISIONS 1			
REVISIONS 2			
REVISIONS 3			
REVISIONS 4			
FIELD CHANGES			

SIGNATURE

P.E. NUMBER

DATE

BRIDGE STREET BRIDGE
PRESUMPSCOT RIVER
WESTBROOK CUMBERLAND COUNTY

CROSS SECTIONS

SHEET NUMBER

36

OF 74

Filename: ...\00\BRIDGE\MSTA\036_XSECT_7.dgn Division: BRIDGE Username: common Date:9/19/2014

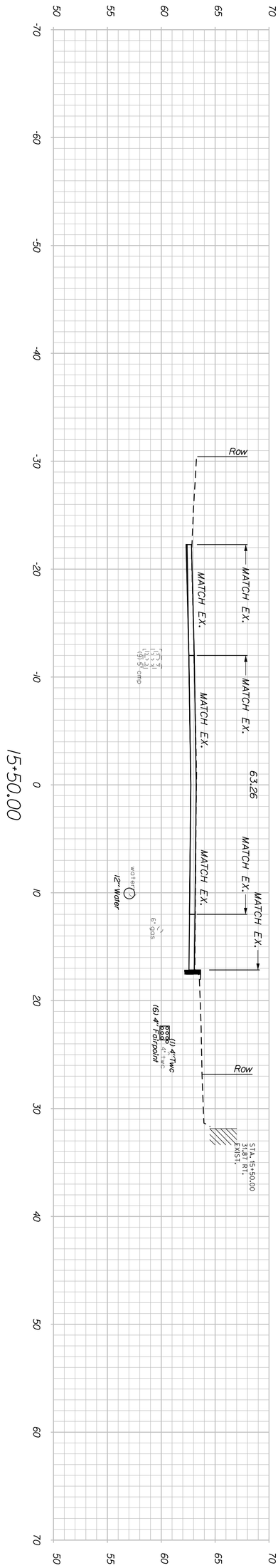

SHEET NUMBER 37 OF 74	BRIDGE STREET BRIDGE PRESUMPSCOT RIVER WESTBROOK CUMBERLAND COUNTY CROSS SECTIONS		STATE OF MAINE DEPARTMENT OF TRANSPORTATION STP-1928(200) WIN 19282.00 BRIDGE NO. 5661 BRIDGE PLANS

PROJ. MANAGER	NATE BENOIT	BY	DATE
DESIGN-DETAILED	ISM	PZA	SEPT 2014
CHECKED-REVIEWED	TPL	TPL/TWM	SEPT 2014
DESIGN2-DETAILED2			
DESIGN3-DETAILED3			
REVISIONS 1			
REVISIONS 2			
REVISIONS 3			
REVISIONS 4			
FIELD CHANGES			

SIGNATURE

P.E. NUMBER

DATE

ABUTMENT SEAL COFFERDAM NOTES

1. The maximum factored applied seal pressure is 14.6 ksf.

2. When sheet piling is used for seal cofferdams, appropriate rolled corners shall be used, and the inside face of the sheet piling shall be at or outside of the seal concrete dimensions shown.

3. The seal concrete placement dimensions shown represent the minimum seal size necessary to meet design requirements and are not based on the use of any particular sheet pile section.

4. The horizontal pay limit for seal concrete will be to the dimensions shown on the plans. No additional payment will be made for concrete placed outside these limits.

5. The depth of the seal is set for a maximum water elevation of 43.0. At this water elevation, in order to provide sufficient resistance to buoyancy, the top of seal elevations require that the maximum average bottom of seal elevation be less than or equal to EL. 37.0. If the water elevation at the time of construction is higher or the elevation of the bottom of seal differs from the elevations noted, the depth of the seal shall be adjusted.

6. If the average elevation of the bottom surface of the seal exceeds the respective limits, the pertinent information shall be forwarded to the Resident for new seal depth design. The Contractor shall adequately vent the cofferdams to ensure the maximum water surface elevation remains at 43.0 feet or below.

ROCK DOWEL NOTES

1. The connection between the concrete seal and the bearing surface, as well as the concrete seal and the abutment footing shall be doweled.

2. The method of installing dowels shall be approved by the Resident.

3. All cost for installation of the anchor dowels shall be incidental to Item No. 503.12 - Reinforcing Steel, Fabricated and Delivered.

4. The anchoring material shall be one of the products listed on the MaineDOT List of Prequalified Grout Materials for Keyways and Anchoring and shall have a maximum water-cement ratio of 0.45 by weight and a minimum unconfined compressive strength of 4.35 ksi at the time of testing. Installation shall be in conformance with the manufacturer's recommendations. The anchor material chosen shall be submitted to the Resident prior to installation.

5. Holes drilled for the dowel reinforcing steel shall be a minimum diameter of 2½ inches.

ABUTMENT NOTES

1. The maximum factored applied footing pressure is 22.2 ksf.

2. Reinforcing steel shall have a minimum concrete cover of 2 inches in the walls and 3 inches in the footings unless otherwise noted.

3. Place 4-in. diameter drains in the breastwall and wingwalls at 10-ft maximum spacing. The exact location will be determined by the Resident.

4. Cover joints where waterstops are not required in accordance with Standard Details Section 502.

5. Construct French Drains behind the abutments and wingwalls in accordance with Standard Specifications Section 512, French Drains.

6. Abutments, wingwalls and their footings shall be backfilled with Granular Borrow for Underwater Backfill. Pay limits will be the structural excavation limits in cut areas and a vertical plane located 10 feet behind the walls and 1 foot behind footings in fill areas.

7. The Utility Conduits passing through the abutment backwalls shall either pass through cast-in-place sleeves or run through a utility blockout, at the option of the Contractor. Additional reinforcing steel shall be provided around the Utility Conduit for either option, as shown on the plans. If blockouts are used, all voids around the Conduits shall be fully grouted with a MaineDOT pre-approved product.

8. Bend or cut bars as directed by the Resident Engineer to provide 2" clear cover around the utility blockouts.

9. The bedrock will vary in nature, slope, and degree of fracturing. Bedrock elevations shown are estimated based on the boring information. Actual rock elevations may vary. After the foundation excavations are completed and all unsound bedrock removed, the Contractor shall survey the foundation bedrock and provide the exact bedrock elevations to the Resident for review and approval by the Engineer.

10. If the bedrock excavations vary from the elevations assumed in the development of the plan set, the abutments and or wingwalls may need to be modified. The Contractor shall grant the Department seven (7) Calendar Days to modify the plans from the date the Resident accepts the bedrock survey.

11. Foundation concrete shall be placed on sound bedrock cleaned of all weathered or fractured rock or loose soil. Prior to placing the footing/seal, the bearing surface shall be washed with high pressure water and air, and smooth bedrock shall be roughened. Where the bedrock surface slope exceeds 4H:1V the bedrock surface shall be benched in level steps or made less steep than 4H:1V.

12. Cofferdam excavation inspection shall be the responsibility of the Contractor and shall be conducted in accordance with Special Provision 511 Cofferdams. An inspection report shall be submitted to the Resident for review. The report shall include bedrock elevation measurements and observations and shall assess the levelness, cleanliness and sediment thickness. Sediment measurements and bedrock elevation measurements shall be taken at a minimum of 20 evenly distributed locations.

13. When the prepared bedrock surface is below the bottom of the footing elevation shown on the plans concrete fill may be placed to fill the void if constructed in the-dry. Concrete fill shall be Class A concrete. Alternatively the footing thickness may be increased up to an additional 1 foot as approved by the Resident. If the footing thickness is increased, the top of footing elevation shall be as shown on the plans.

14. When bedrock protrudes above the bottom of the footing, the footing may be raised and vertical reinforcing may be cut in the field with the approval of the Resident. The minimum allowable footing thickness is shown on the plans. Payment for adjusting footing depth and adjusting reinforcing steel will be considered incidental to related contact items. No separate payment will be made.

15. At the option of the Resident, bedrock that protrudes above the bottom of the footing/seal elevation may be removed. Payment for bedrock removal will be made under Item No. 206.092, Structural Rock Excavation - Major Structures.

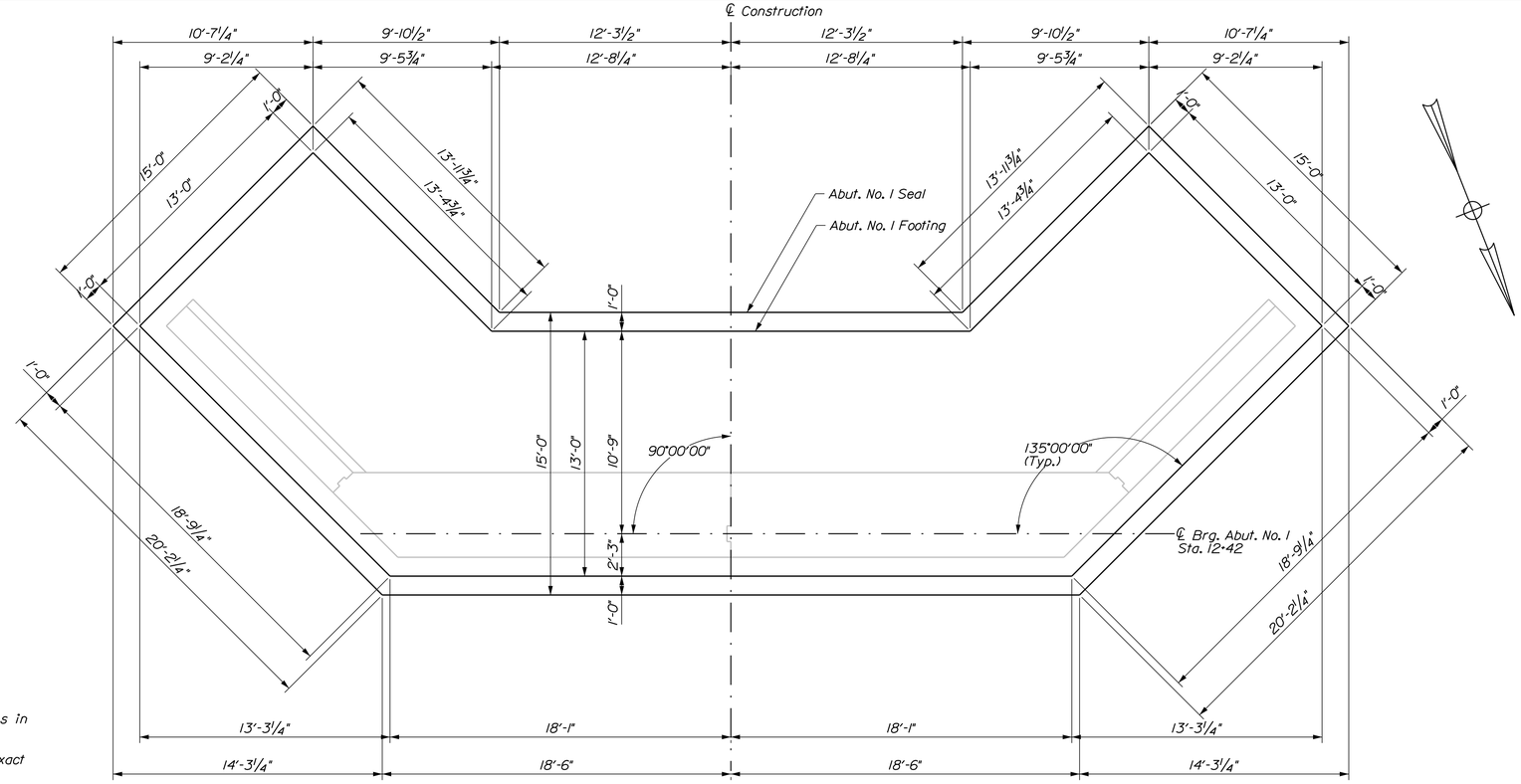

PLAN - ABUTMENT NO. 1 SEAL & FOOTING

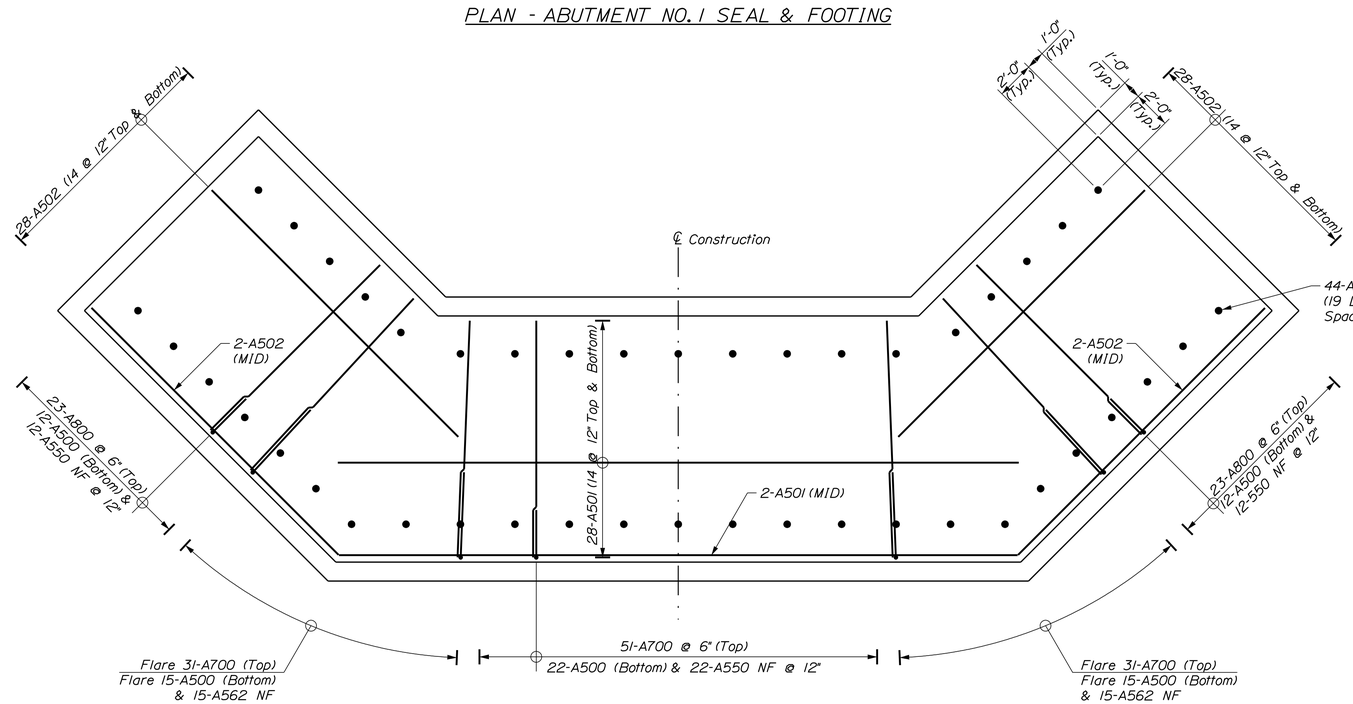

PLAN - ABUTMENT NO. 1 FOOTING REINFORCEMENT

Note
Footing Hook Bars Not Shown.
See Sheets 40-42 For Layout.

LEGEND
NF = Near Face
FF = Far Face
EF = Each Face
MID = Middle

Stantec

STATE OF MAINE
DEPARTMENT OF TRANSPORTATION

STP-1928(200)

WIN 19282.00

BRIDGE NO. 5661

BRIDGE PLANS

PROJ. MANAGER	NATE BENOIT		
DESIGN-DETAILED	DDT	JTS	SEPT 2014
CHECKED-REVIEWED	JHH	DDT/TWM	SEPT 2014
DESIGN2-DETAILED2			
DESIGN3-DETAILED3			
REVISIONS 1			
REVISIONS 2			
REVISIONS 3			
REVISIONS 4			
FIELD CHANGES			

SIGNATURE

P.E. NUMBER

DATE

BRIDGE STREET BRIDGE
PRESUMPSCOT RIVER
WESTBROOK CUMBERLAND COUNTY

ABUT. NO. 1 SEAL & FOOTING

SHEET NUMBER
38
OF 74

Filename: ...\MSTA\038_S_Abut_1_Ftg.dgn Division: BRIDGE Username: common Date:9/29/2014

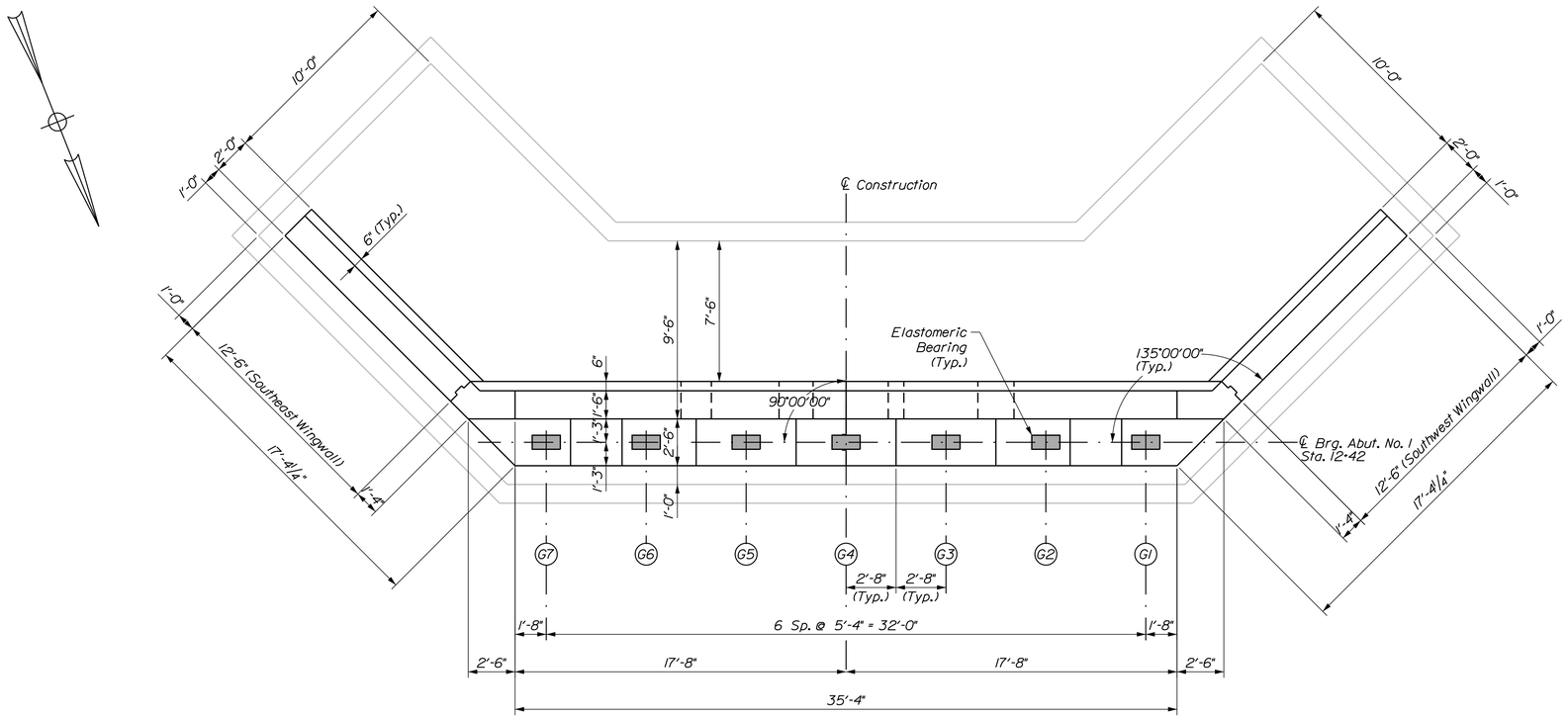

PLAN - ABUTMENT NO. 1

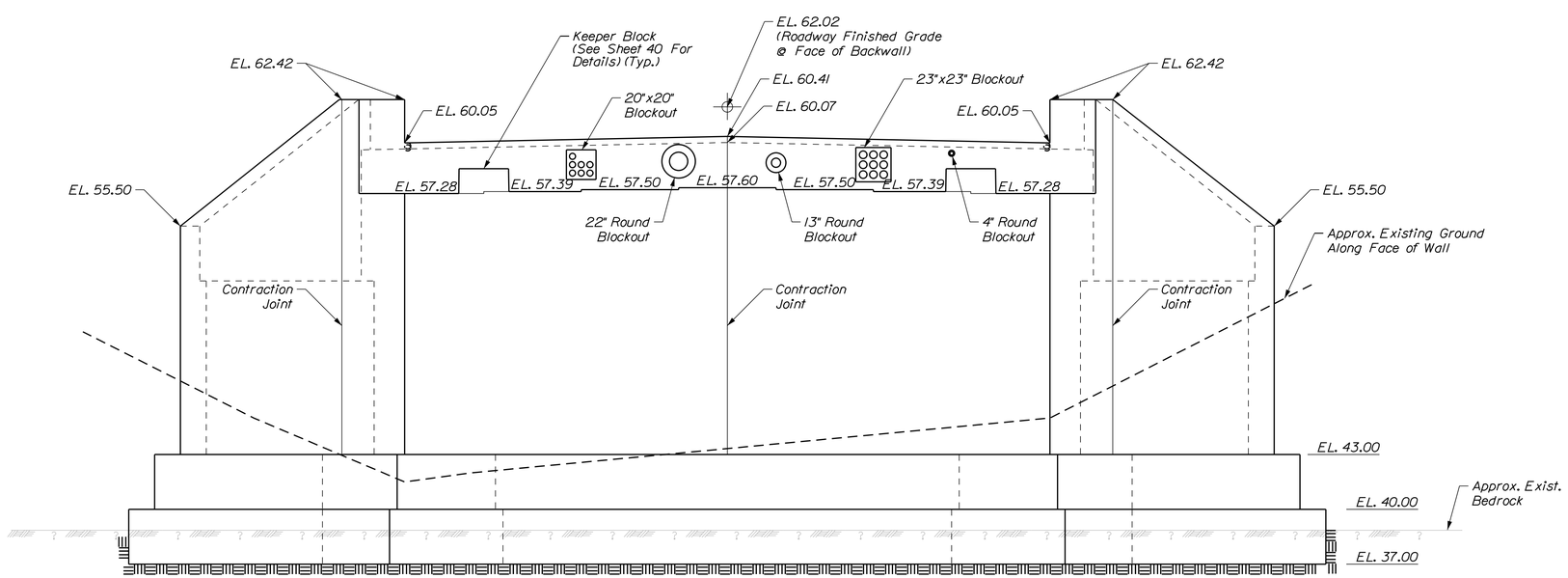

ELEVATION - ABUTMENT NO. 1

Stantec

STATE OF MAINE
DEPARTMENT OF TRANSPORTATION

STP-1928(200)

WIN 19282.00

BRIDGE NO. 5661

BRIDGE PLANS

PROJ. MANAGER	NATE BENOIT			
DESIGN-DETAILED	DOT	BY	DATE	
CHECKED-REVIEWED	JHH	JTS	SEPT 2014	SIGNATURE
DESIGN2-DETAILED2		DOT/TWM	SEPT 2014	
DESIGN3-DETAILED3				P.E. NUMBER
REVISIONS 1				
REVISIONS 2				
REVISIONS 3				DATE
REVISIONS 4				
FIELD CHANGES				

BRIDGE STREET BRIDGE
PRESUMPSCOT RIVER
WESTBROOK CUMBERLAND COUNTY

ABUTMENT NO. 1 PLAN

SHEET NUMBER

39

OF 74

Filename: ...\BRIDGE\MSTA\039_S_Abut_1.dgn Division: BRIDGE Username: common Date:9/15/2014

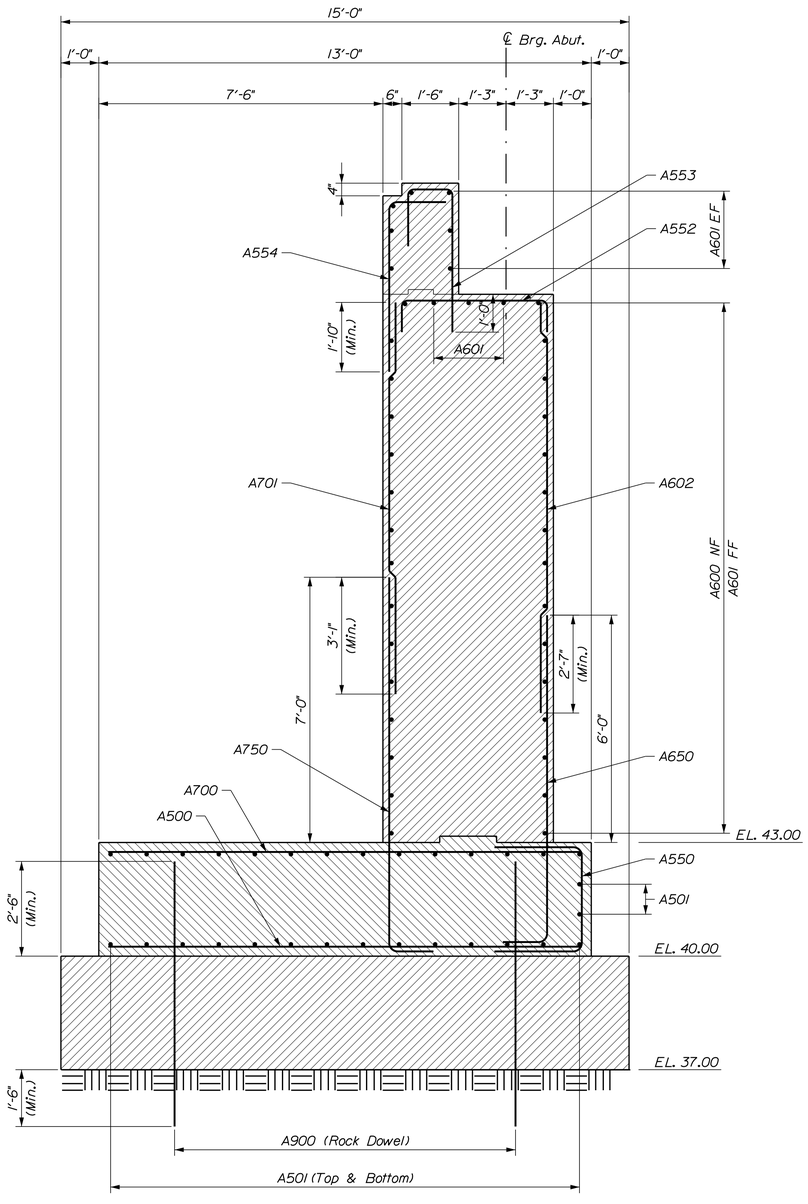

TYPICAL SECTION - ABUTMENT NO. 1

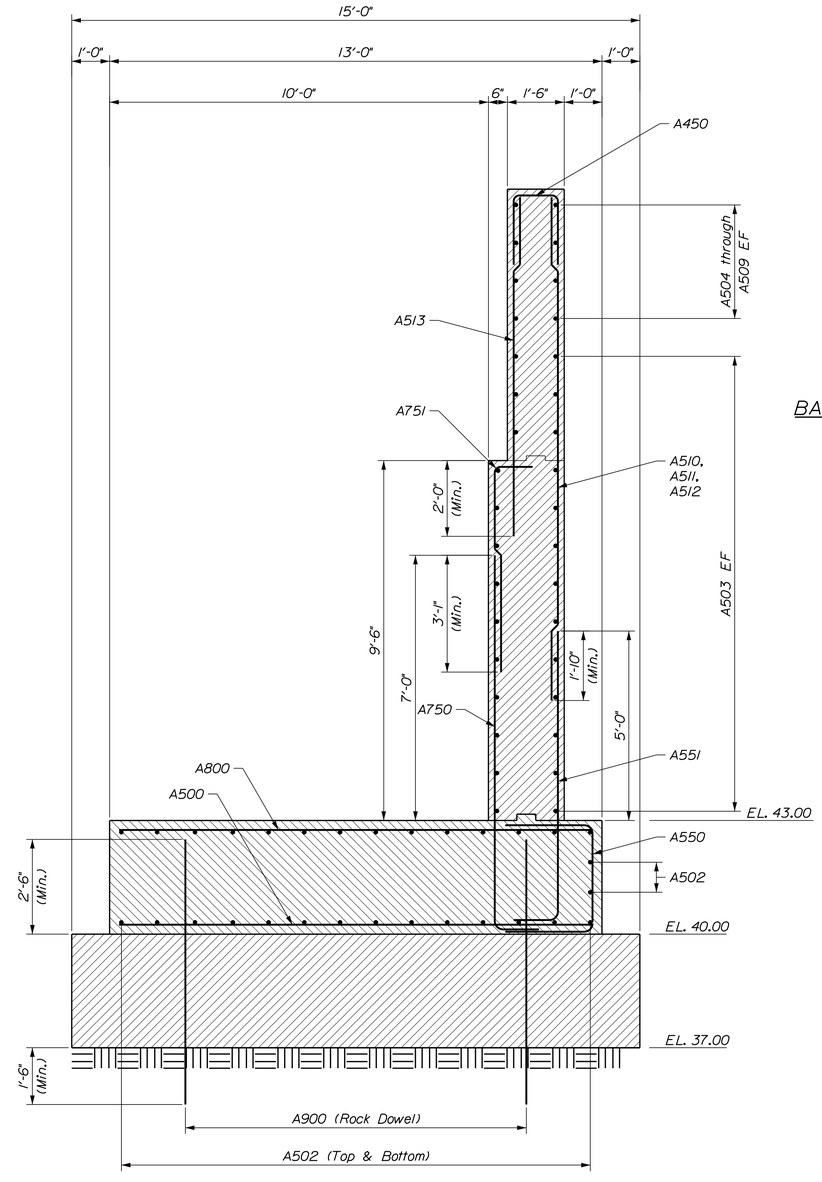

TYPICAL SECTION - ABUTMENT NO. 1 WINGWALL

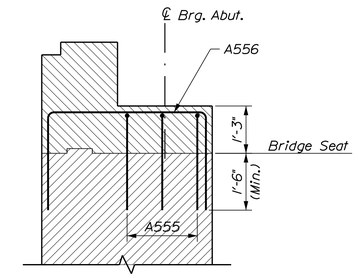

BACKWALL SECTION THROUGH KEEPER BLOCK

(Typical Reinforcing Omitted for Clarity)

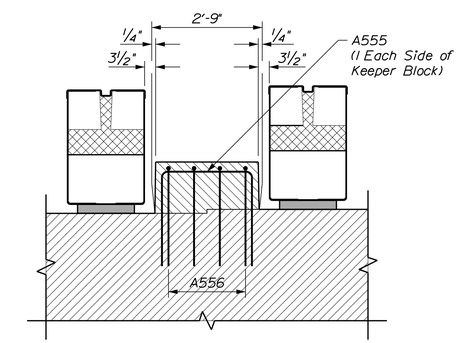

KEEPER BLOCK ELEVATION

(Typical Reinforcing in Backwall and Deck Omitted for Clarity)

LEGEND

NF = Near Face
FF = Far Face
EF = Each Face
MID = Middle

Stantec

STATE OF MAINE
DEPARTMENT OF TRANSPORTATION

STP-1928(200)

WIN 19282.00

BRIDGE NO. 5661

BRIDGE PLANS

PROJ. MANAGER	NATE BENOIT		
DESIGN-DETAILED	DDT	JTS	SEPT 2014
CHECKED-REVIEWED	JHH	DDT/TWM	SEPT 2014
DESIGN2-DETAILED2			
DESIGN3-DETAILED3			
REVISIONS 1			
REVISIONS 2			
REVISIONS 3			
REVISIONS 4			
FIELD CHANGES			

SIGNATURE

P.E. NUMBER

DATE

BRIDGE STREET BRIDGE
PRESUMPSCOT RIVER
WESTBROOK CUMBERLAND COUNTY

ABUTMENT NO. 1 SECTIONS

SHEET NUMBER

40

OF 74

Filename: ...\MSTA\040_Abut_1_Reinf_Sec.dgn Division: BRIDGE Username: common Date:9/15/2014

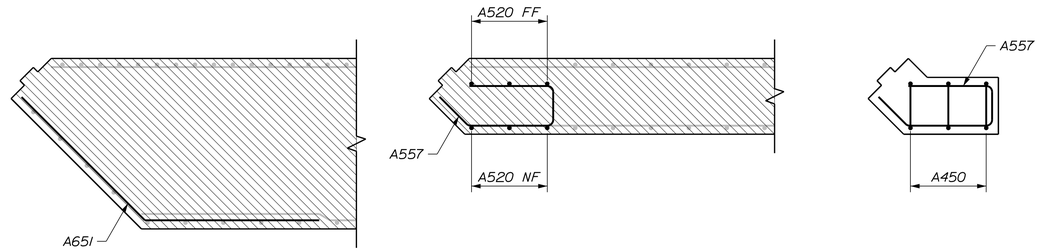

SECTION A-A SECTION B-B SECTION C-C

TYPICAL CORNER REINFORCEMENT - ABUTMENT NO. 1
(Southeast Corner Shown, Southwest Similar)

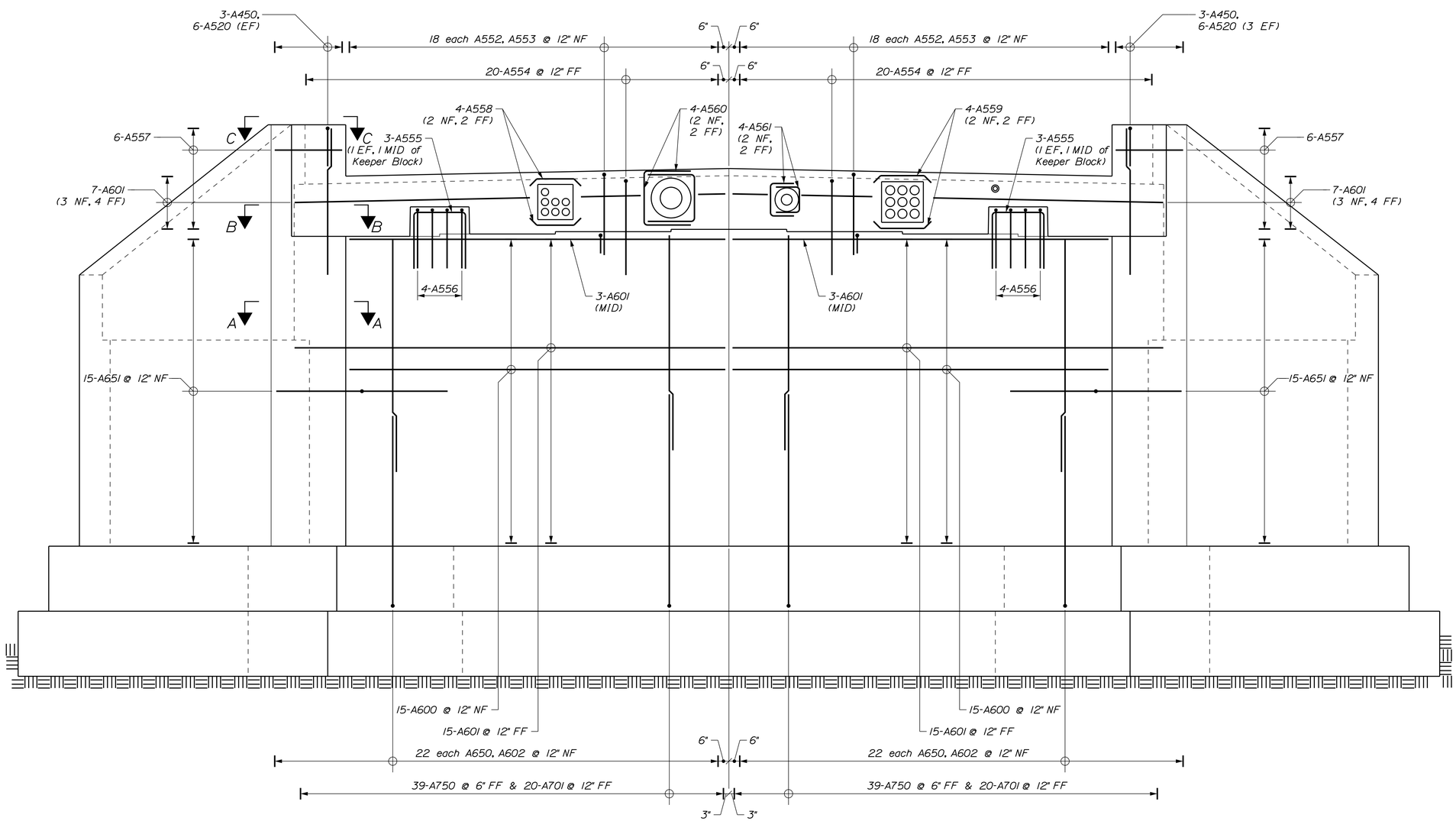

ELEVATION - ABUTMENT NO. 1 REINFORCEMENT

LEGEND
NF = Near Face
FF = Far Face
EF = Each Face
MID = Middle

Stantec

STATE OF MAINE
DEPARTMENT OF TRANSPORTATION

STP-1928(200)

WIN 19282.00

BRIDGE NO. 5661

BRIDGE PLANS

		BY	DATE
PROJ. MANAGER	NATE BENOIT		
DESIGN-DETAILED	DOT	JTS	SEPT 2014
CHECKED-REVIEWED	JRH	DOT/TWM	SEPT 2014
DESIGN2-DETAILED2			
DESIGN3-DETAILED3			
REVISIONS 1			
REVISIONS 2			
REVISIONS 3			
REVISIONS 4			
FIELD CHANGES			

SIGNATURE

P.E. NUMBER

DATE

BRIDGE STREET BRIDGE
PRESUMPSCOT RIVER
WESTBROOK CUMBERLAND COUNTY

ABUT. NO. 1 REINFORCEMENT

SHEET NUMBER
41
OF 74

Filename: ...\MSTA\041_S_Abut_1_Reinf.dgn Division: BRIDGE Username: common Date:9/15/2014

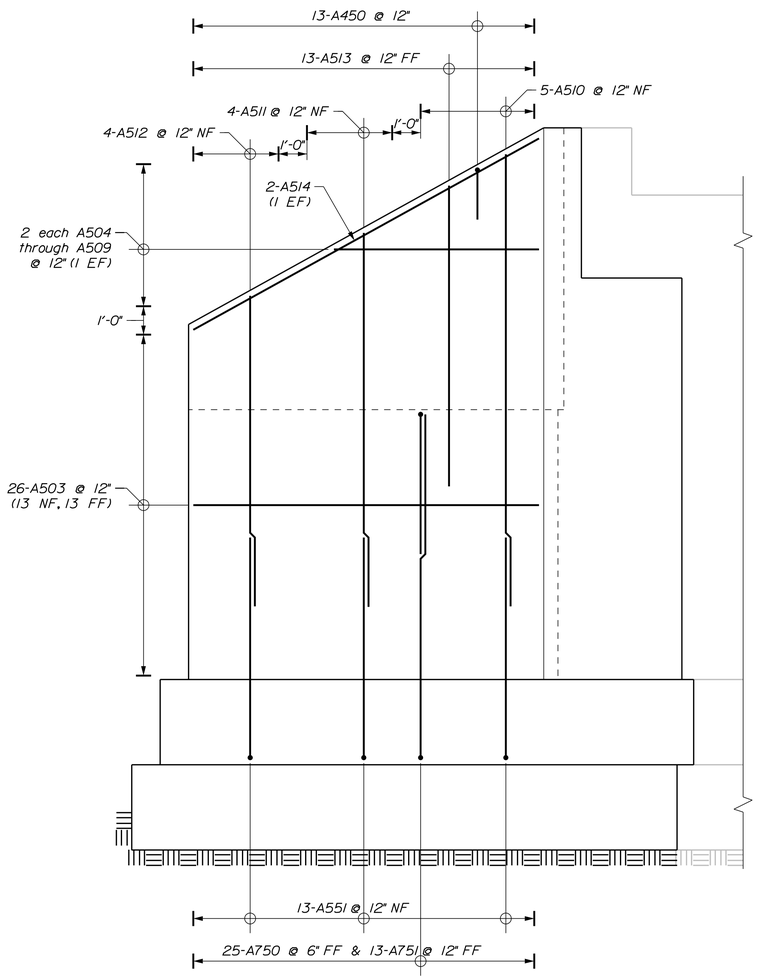

ABUTMENT NO. 1 SOUTHEAST WINGWALL REINFORCING ELEVATION

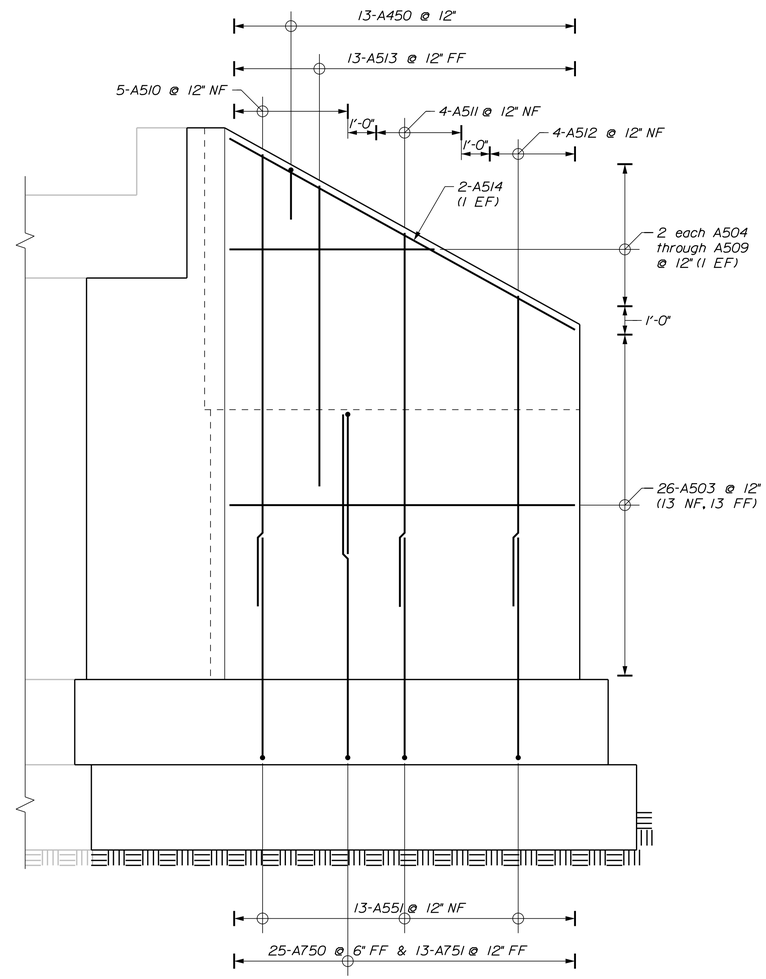

ABUTMENT NO. 1 SOUTHWEST WINGWALL REINFORCING ELEVATION

LEGEND
NF = Near Face
FF = Far Face
EF = Each Face
MID = Middle

Stantec

STATE OF MAINE
DEPARTMENT OF TRANSPORTATION

STP-1928(200)

WIN 19282.00

BRIDGE NO. 5661

BRIDGE PLANS

PROJ. MANAGER	NATE BENOIT	BY	DATE
DESIGN-DETAILED	DOT	JTS	SEPT 2014
CHECKED-REVIEWED	JHH	DOT/TWM	SEPT 2014
DESIGN2-DETAILED2			
DESIGN3-DETAILED3			
REVISIONS 1			
REVISIONS 2			
REVISIONS 3			
REVISIONS 4			
FIELD CHANGES			

SIGNATURE

P.E. NUMBER

DATE

BRIDGE STREET BRIDGE
PRESUMPSCOT RIVER
WESTBROOK CUMBERLAND COUNTY

ABUT. NO. 1 WINGWALL REINF.

SHEET NUMBER
42
OF 74

Filename: ...\MSTA\042_S_Abut_1_WW_Reinf.dgn Division: BRIDGE Username: common Date:9/15/2014

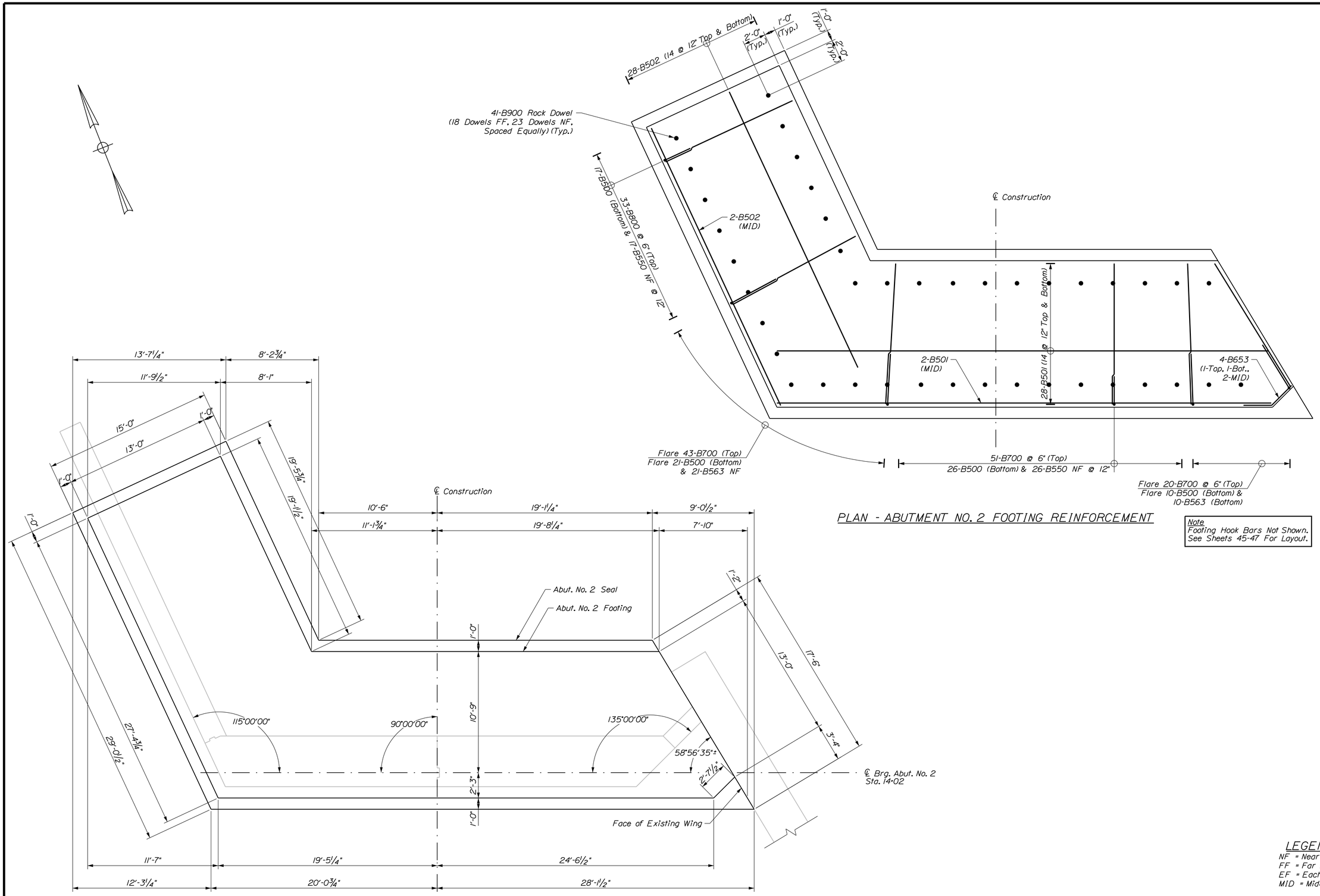

PLAN - ABUTMENT NO. 2 FOOTING REINFORCEMENT

Note
Footing Hook Bars Not Shown.
See Sheets 45-47 For Layout.

PLAN - ABUTMENT NO. 2 SEAL & FOOTING

LEGEND
NF = Near Face
FF = Far Face
EF = Each Face
MID = Middle

Stantec

STATE OF MAINE
DEPARTMENT OF TRANSPORTATION

STP-1928(200)

WIN 19282.00

BRIDGE NO. 5661

BRIDGE PLANS

PROJ. MANAGER	NATE BENOIT	BY	DATE
DESIGN-DETAILED	DOT	JTS	SEPT 2014
CHECKED-REVIEWED	JRH	DOT/TWM	SEPT 2014
DESIGN2-DETAILED2			
DESIGN3-DETAILED3			
REVISIONS 1			
REVISIONS 2			
REVISIONS 3			
REVISIONS 4			
FIELD CHANGES			

SIGNATURE

P.E. NUMBER

DATE

BRIDGE STREET BRIDGE
PRESUMPSCOT RIVER
WESTBROOK CUMBERLAND COUNTY

ABUT. NO. 2 SEAL & FOOTING

SHEET NUMBER
43
OF 74

Filename: ...\MSTA\043_N_Abut_2_Ftg.dgn Division: BRIDGE Username: common Date:9/15/2014

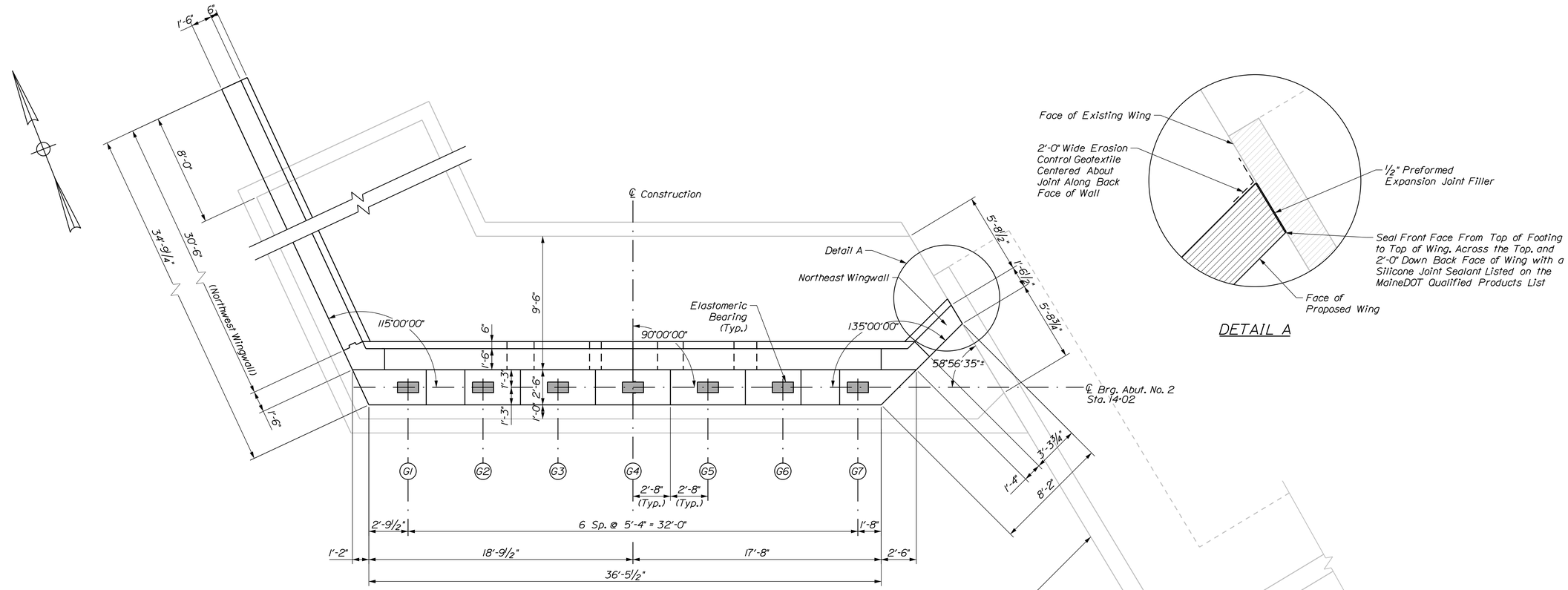

PLAN - ABUTMENT NO. 2

DETAIL A

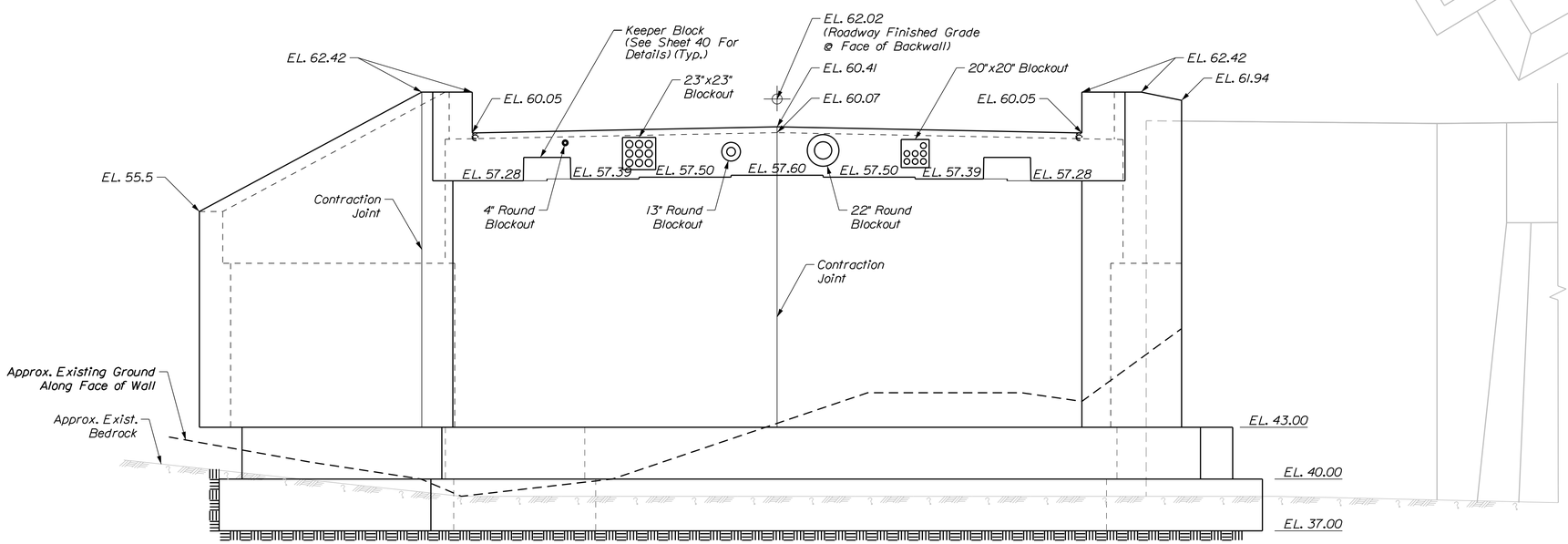

ELEVATION - ABUTMENT NO. 2

Stantec

STATE OF MAINE
DEPARTMENT OF TRANSPORTATION

STP-1928(200)

WIN 19282.00

BRIDGE NO. 5661

BRIDGE PLANS

PROJ. MANAGER	NATE BENOIT		
DESIGN-DETAILED	DOT	JTS	SEPT 2014
CHECKED-REVIEWED	JHH	DOT/TWM	SEPT 2014
DESIGN2-DETAILED2			
DESIGN3-DETAILED3			
REVISIONS 1			
REVISIONS 2			
REVISIONS 3			
REVISIONS 4			
FIELD CHANGES			

SIGNATURE

P.E. NUMBER

DATE

BRIDGE STREET BRIDGE
PRESUMPSCOT RIVER
WESTBROOK CUMBERLAND COUNTY

ABUTMENT NO. 2 PLAN

SHEET NUMBER

44

OF 74

Filename: ...\BRIDGE\MSTA\044_N_Abut_2.dgn Division: BRIDGE Username: common Date:9/15/2014

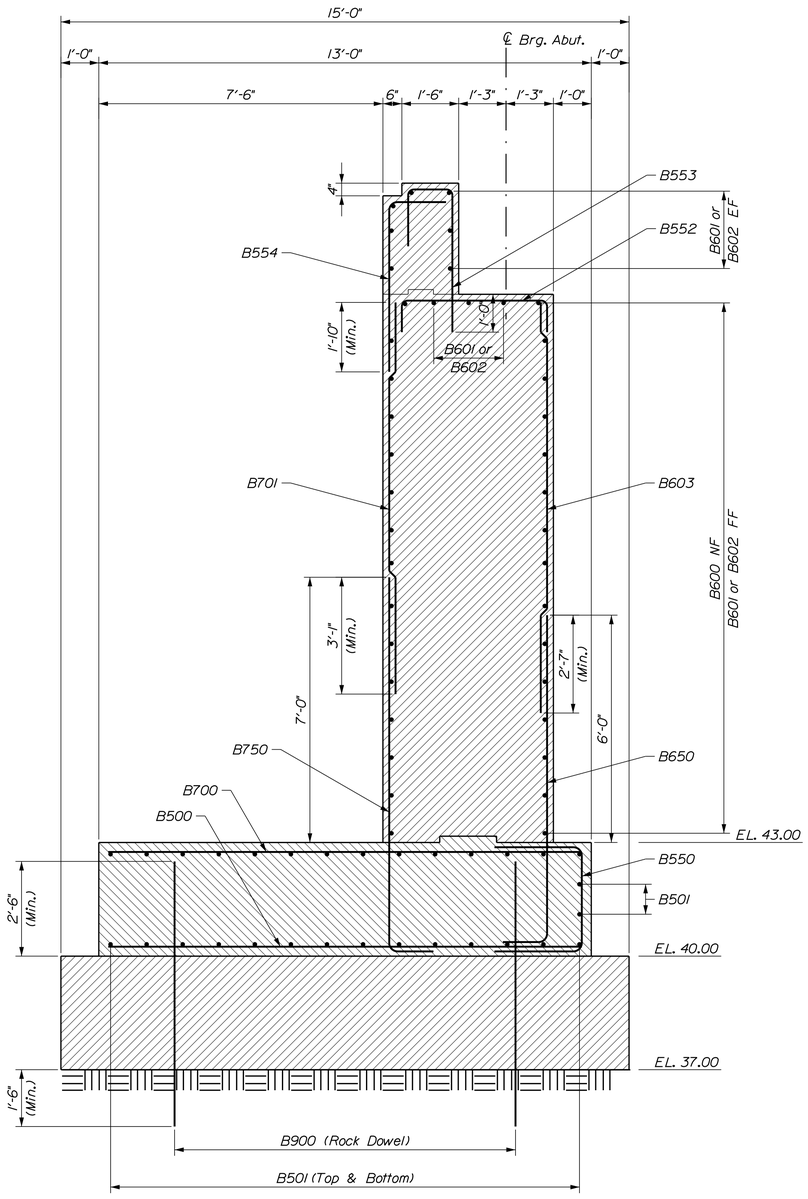

TYPICAL SECTION - ABUTMENT NO. 2

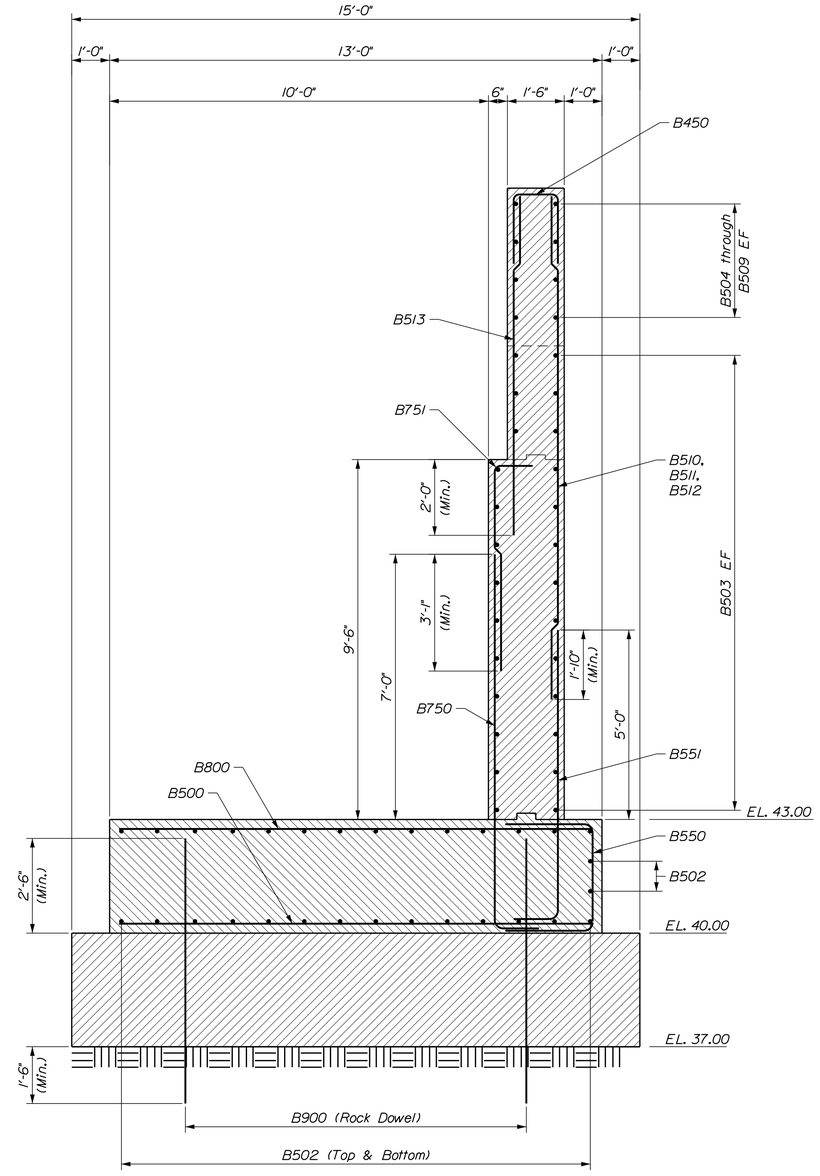

TYPICAL SECTION - ABUTMENT NO. 2 WINGWALL

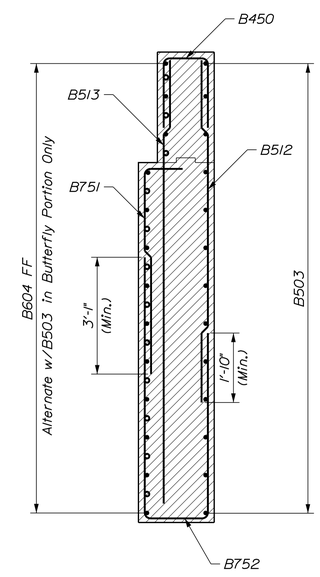

SECTION - BUTTERFLY WING

LEGEND
NF = Near Face
FF = Far Face
EF = Each Face
MID = Middle

Stantec

STATE OF MAINE
DEPARTMENT OF TRANSPORTATION

STP-1928(200)

WIN 19282.00

BRIDGE NO. 5661

BRIDGE PLANS

PROJ. MANAGER	NATE BENOIT	BY	DATE
DESIGN-DETAILED	DOT	JTS	SEPT 2014
CHECKED-REVIEWED	JHH	DOT/TWM	SEPT 2014
DESIGN2-DETAILED2			
DESIGN3-DETAILED3			
REVISIONS 1			
REVISIONS 2			
REVISIONS 3			
REVISIONS 4			
FIELD CHANGES			

SIGNATURE

P.E. NUMBER

DATE

BRIDGE STREET BRIDGE
PRESUMPSCOT RIVER
WESTBROOK CUMBERLAND COUNTY

ABUTMENT NO. 2 SECTIONS

SHEET NUMBER

45

OF 74

Filename: ...\MSTA\045_Abut_2_Reinf_Sec.dgn Division: BRIDGE Username: common Date:9/15/2014

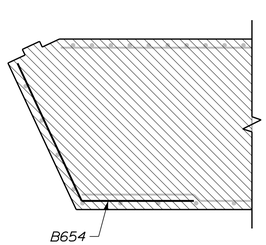

SECTION A-A

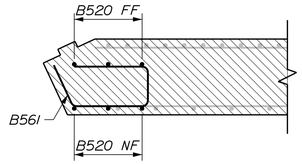

SECTION B-B

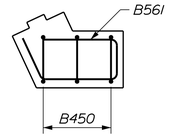

SECTION C-C

NORTHWEST CORNER REINFORCEMENT

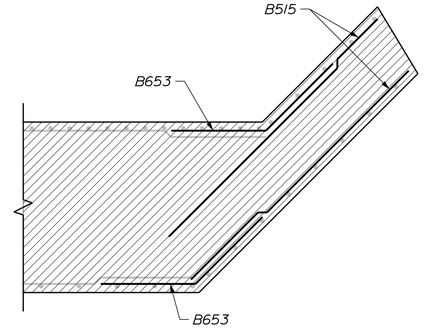

SECTION D-D

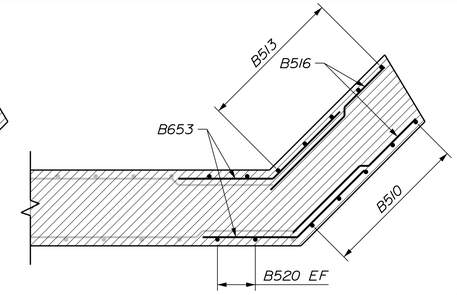

SECTION E-E

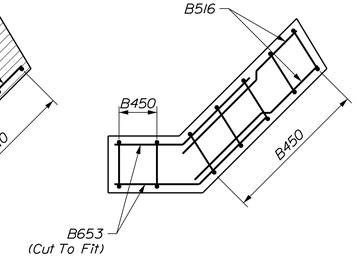

SECTION F-F

NORTHEAST CORNER REINFORCEMENT

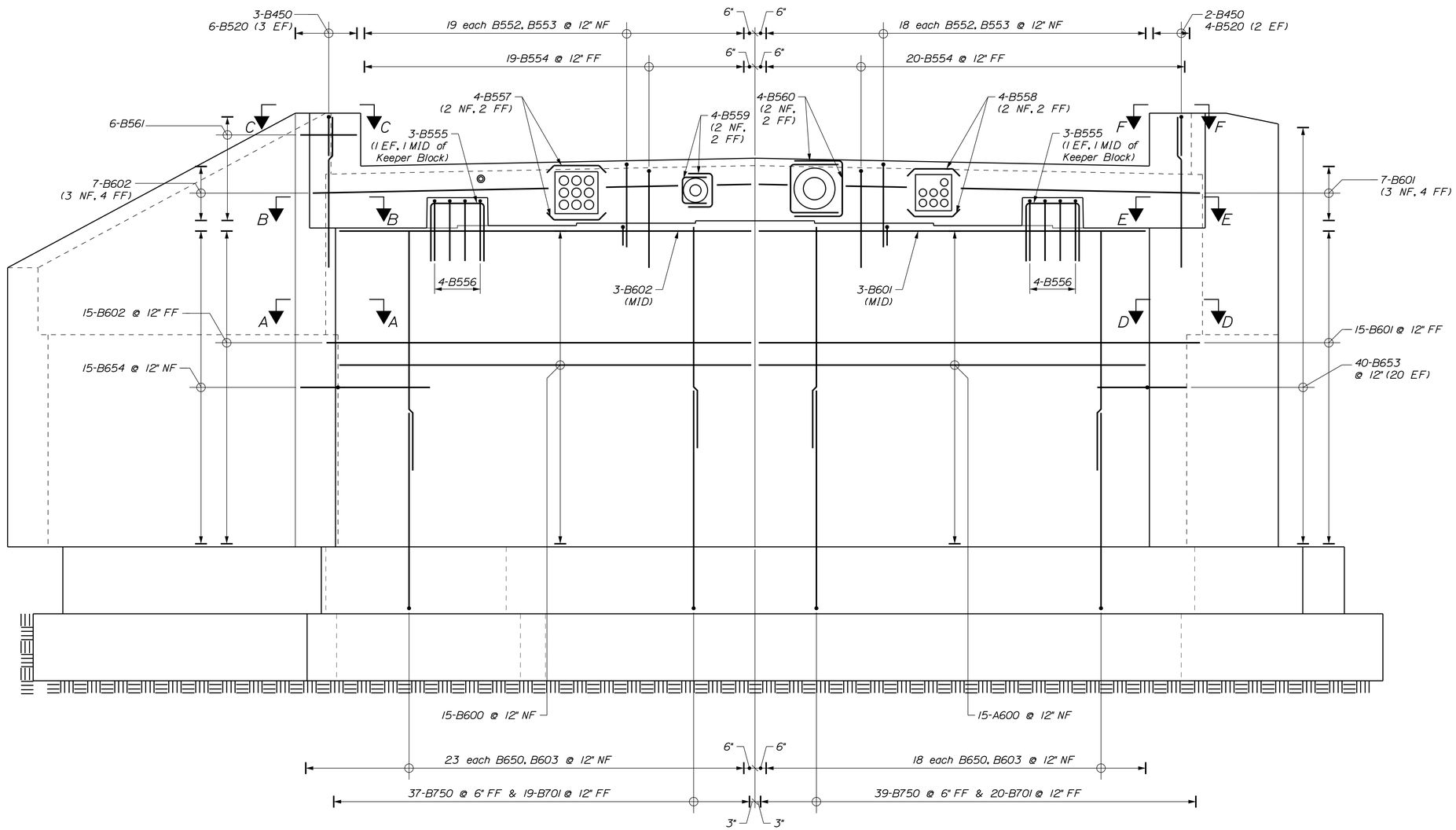

ELEVATION - ABUTMENT NO. 2 REINFORCEMENT

LEGEND
NF = Near Face
FF = Far Face
EF = Each Face
MID = Middle

Stantec

STATE OF MAINE
DEPARTMENT OF TRANSPORTATION

STP-1928(200)

WIN 19282.00

BRIDGE NO. 5661

BRIDGE PLANS

		BY	DATE
PROJ. MANAGER	NATE BENOIT		
DESIGN-DETAILED	DOT	JTS	SEPT 2014
CHECKED-REVIEWED	JHH	DOT/TWM	SEPT 2014
DESIGN2-DETAILED2			
DESIGN3-DETAILED3			
REVISIONS 1			
REVISIONS 2			
REVISIONS 3			
REVISIONS 4			
FIELD CHANGES			

SIGNATURE

P.E. NUMBER

DATE

BRIDGE STREET BRIDGE
PRESUMPSCOT RIVER
WESTBROOK CUMBERLAND COUNTY

ABUT. NO. 2 REINFORCEMENT

SHEET NUMBER
46
OF 74

Filename: ...\MSTA\046_N_Abut_2_Reinf.dgn Division: BRIDGE Username: common Date:9/15/2014

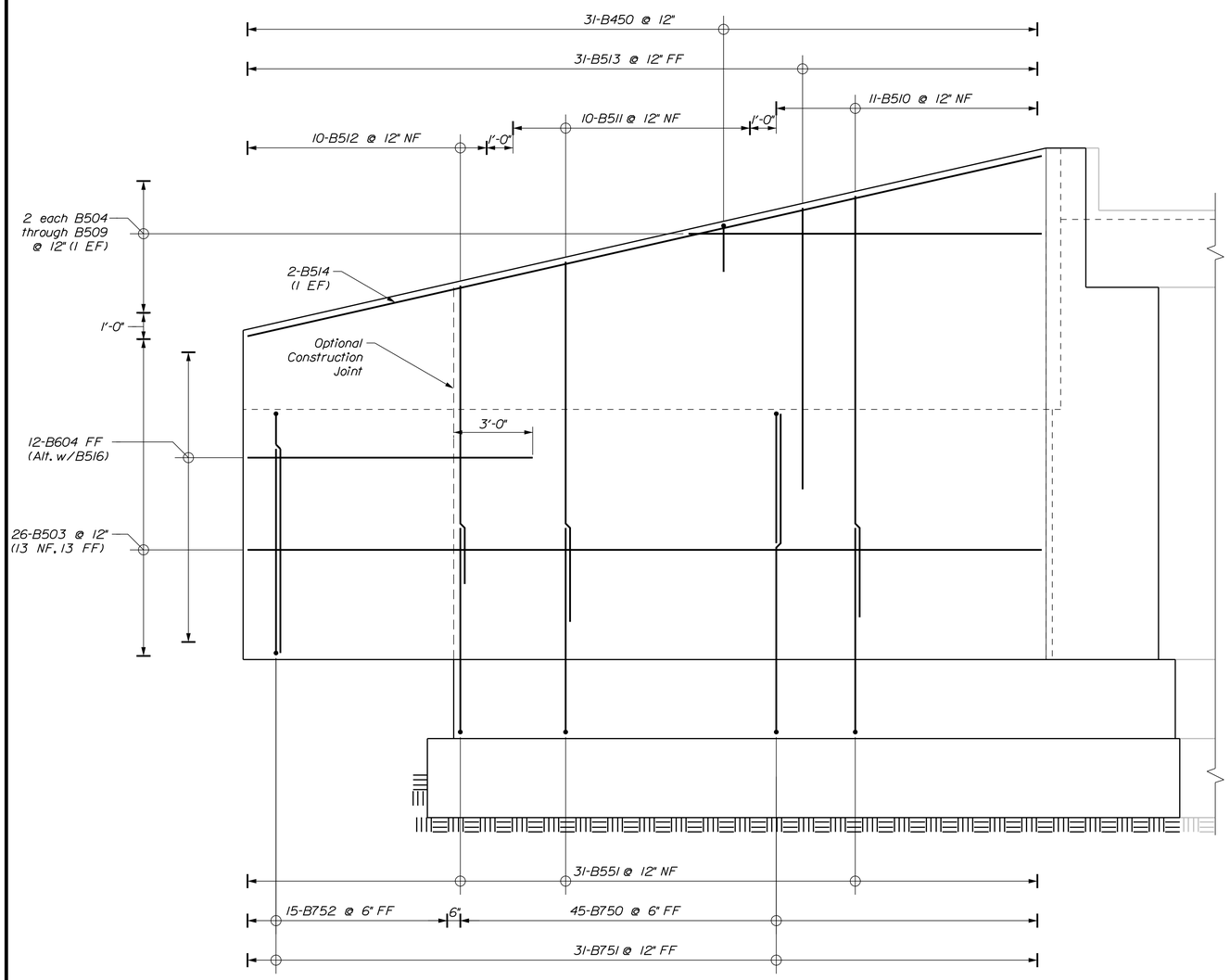

ABUTMENT NO. 2 NORTHWEST WINGWALL REINFORCING ELEVATION

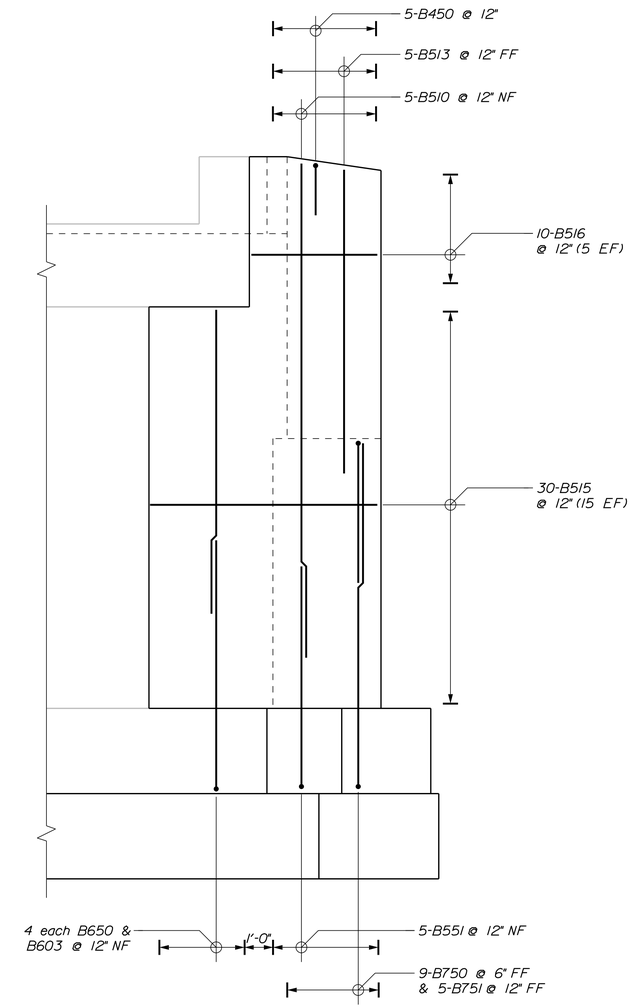

ABUTMENT NO. 2 NORTHEAST WINGWALL REINFORCING ELEVATION

LEGEND
NF = Near Face
FF = Far Face
EF = Each Face
MID = Middle

Stantec

STATE OF MAINE
DEPARTMENT OF TRANSPORTATION

STP-1928(200)

WIN 19282.00

BRIDGE NO. 5661

BRIDGE PLANS

PROJ. MANAGER	NATE BENOIT		
DESIGN-DETAILED	DDT	JTS	SEPT 2014
CHECKED-REVIEWED	JHH	DDT/TWM	SEPT 2014
DESIGN2-DETAILED2			
DESIGN3-DETAILED3			
REVISIONS 1			
REVISIONS 2			
REVISIONS 3			
REVISIONS 4			
FIELD CHANGES			

SIGNATURE

P.E. NUMBER

DATE

BRIDGE STREET BRIDGE
PRESUMPSCOT RIVER
WESTBROOK CUMBERLAND COUNTY

ABUT. NO. 2 WINGWALL REINF.

SHEET NUMBER
47
OF 74

Filename: ...\MSTA\047_N_Abut_2_WW_Reinf.dgn Division: BRIDGE Username: common Date:9/15/2014

PIER DESIGN CRITERIA

1. Critical AASHTO Load Combination: Maine-Modified Strength I with Ice

2. Buoyancy: Q1.1 - Water level assumed at EL. 43.0.
Q50 - Water level assumed at EL. 53.1

3. Stream flow: Q1.1 - Velocity of 2.8 fps
Q50 - Velocity of 6.6 fps
Applied parallel to longitudinal centerline of pier.
Debris loading accounted for by increasing exposed surface area of pier by 25%.

4. Wind: 100 mph.

5. Ice: Q1.1 - Thickness 1'-6", pressure 28.8 ksf
(2'-6" thickness at Extreme Event II)
Q50 - Thickness of 1'-6", pressure 14.4 ksf
(2'-6" thickness at Extreme Event II)
30% of nose force applied transverse to pier.

PIER SEAL COFFERDAM NOTES

1. When sheet piling is used for seal cofferdams, appropriate rolled corners shall be used, and the inside face of the sheet piling shall be at or outside of the seal concrete dimensions shown.

2. The seal concrete placement dimensions shown represent the minimum seal size necessary to meet design requirements and are not based on the use of any particular sheet pile section.

3. The horizontal pay limit for seal concrete will be to the dimensions shown on the plans. No additional payment will be made for concrete placed outside these limits.

4. The depth of the seal is set for a maximum water elevation of 50.0. At this water elevation, in order to provide sufficient resistance to buoyancy, the top of seal elevations require that the maximum average bottom of seal elevation be less than or equal to EL. 30.0. If the water elevation at the time of construction is higher or the elevation of the bottom of seal differs from the elevations noted, the depth of the seal shall be adjusted.

5. If the average elevation of the bottom surface of the seal exceeds the respective limits, the pertinent information shall be forwarded to the Resident for new seal depth design. The Contractor shall adequately vent the cofferdams to ensure the maximum water surface elevation remains at 50.0 feet or below.

6. The method of placing dowels in the seal concrete shall be approved by the Resident.

PIER NOTES

1. The maximum factored applied footing pressure is 13.3 ksf.

2. The maximum factored applied seal pressure is 13.6 ksf.

3. Reinforcing steel shall have a minimum concrete cover of 3 inches unless otherwise noted.

4. The bedrock will vary in nature, slope, and degree of fracturing. Bearing surface elevations shown are estimated based on the boring information. Actual rock elevations may vary. After the foundation excavations are completed and all unsound bedrock removed, the Contractor shall survey the foundation bedrock and provide the exact bedrock elevations to the Resident for review and approval by the Engineer.

5. If the bedrock excavations vary from the elevations assumed in the development of the plan set, the pier may need to be modified. The Contractor shall grant the Department seven (7) Calendar Days to modify the plans from the date the Resident accepts the bedrock survey.

6. Foundation concrete shall be placed on sound bedrock cleaned of all loose, weathered or fractured rock and loose soil. Prior to placing the footing/seal, the bearing surface shall be washed with high pressure water and air, and smooth bedrock shall be roughened. Where the bedrock surface slope exceeds 4H:1V the bedrock surface shall be benched in level steps or made less steep than 4H:1V.

7. Cofferdam excavation inspection shall be the responsibility of the Contractor and shall be conducted in accordance with Special Provision 511 Cofferdams. An inspection report shall be submitted to the Resident for review. The report shall include bedrock elevation measurements and observations and shall assess the levelness, cleanliness and sediment thickness. Sediment measurements and bedrock elevation measurements shall be taken at a minimum of 20 evenly distributed locations.

8. When the prepared bedrock surface is below the bottom of the footing elevation shown on the plans concrete fill may be placed to fill the void if constructed in the-dry. Concrete fill shall be Class A concrete. Alternatively the footing thickness may be increased up to an additional 1 foot as approved by the Resident. If the footing thickness is increased, the top of footing elevation shall be as shown on the plans.

9. When bedrock protrudes above the bottom of the footing, the footing may be raised and vertical reinforcing may be cut in the field with the approval of the Resident. The minimum allowable footing thickness is shown on the plans. Payment for adjusting footing depth and adjusting reinforcing steel will be considered incidental to related contact items. No separate payment will be made.

10. At the option of the Resident, bedrock that protrudes above the bottom of the footing/seal elevation may be removed. Payment for bedrock removal will be made under Item No. 206.11, Structural Rock Excavation - Piers.

PIER NOSE ARMOR NOTES

1. Payment for furnishing and placing the concrete anchors and pier nose shall be incidental to the unit price bid for the concrete pier.

2. Pier Nose Protection shall be extended from top of footing to EL. 57.0.

3. Nose armor, including anchor studs, shall be cleaned and galvanized in accordance with Section 506 of the Contract Special Provisions and included in Pay Item 502.239 - Structural Concrete Piers.

ROCK DOWEL NOTES

1. The connection between the concrete seal and the pier footing shall be doweled.

2. The method of installing anchor dowels in the concrete seal shall be approved by the Resident.

3. All cost for installation of the anchor dowels shall be incidental to Item No. 503.12 - Reinforcing Steel, Fabricated and Delivered.

4. The anchoring material shall be one of the products listed on the MaineDOT List of Prequalified Grout Materials for Keyways and Anchoring and shall have a maximum water-cement ratio of 0.45 by weight and a minimum unconfined compressive strength of 4.35 ksi at the time of testing. Installation shall be in conformance with the manufacturer's recommendations. The anchor material chosen shall be submitted to the Resident prior to installation.

5. Holes drilled for the dowel reinforcing steel shall be a minimum diameter of 2½ inches.

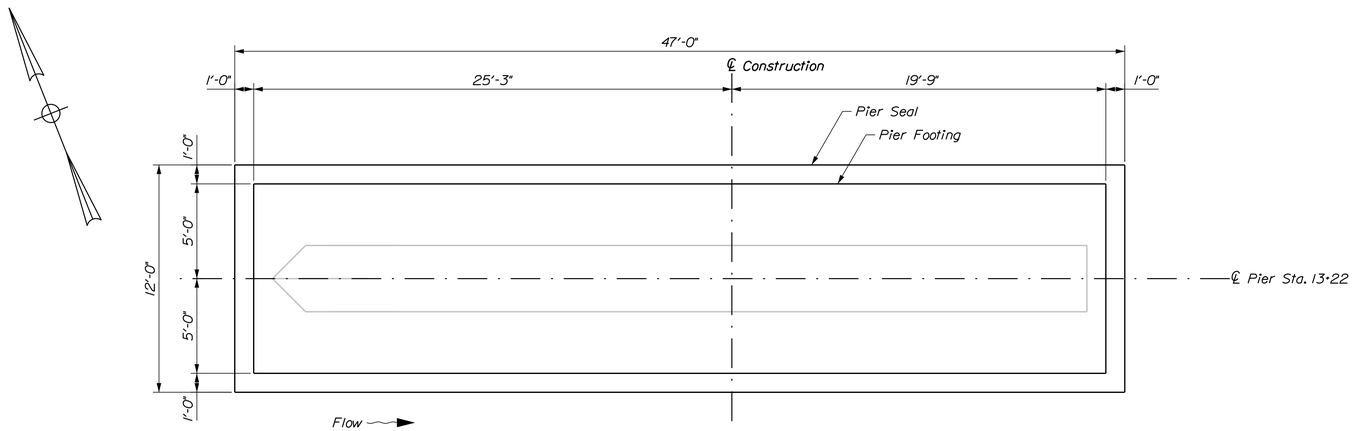

PLAN - PIER SEAL & FOOTING

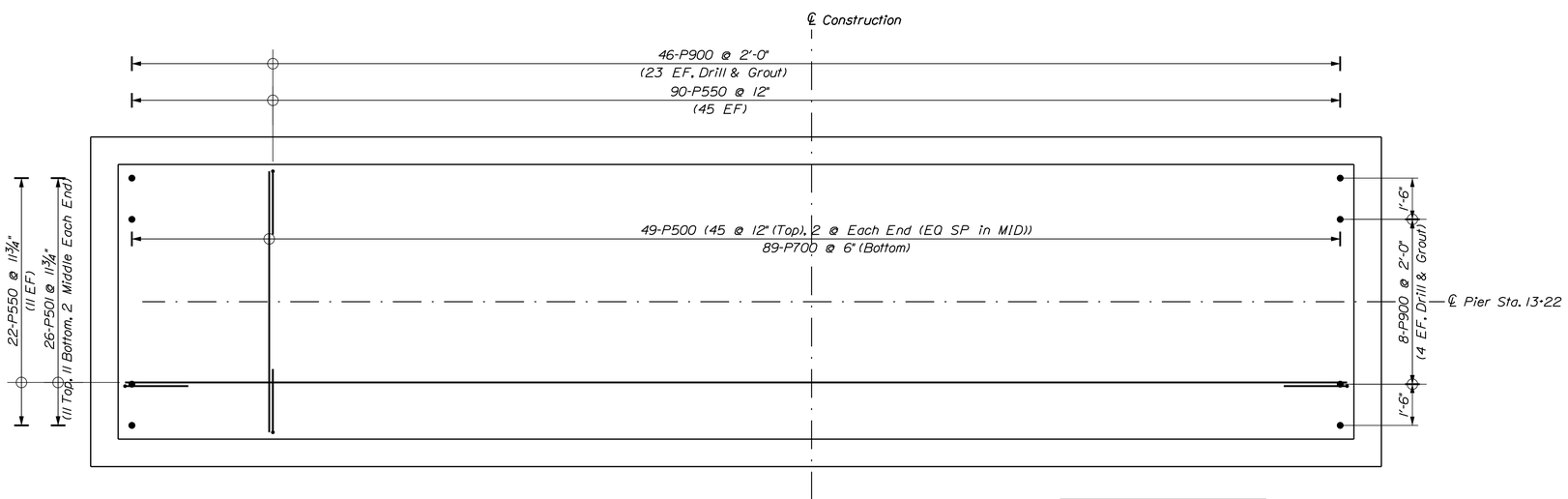

PLAN - PIER FOOTING REINFORCEMENT

Note
Footing Hook Bars Not Shown.
See Sheet 50 For Layout.

Stantec

STATE OF MAINE
DEPARTMENT OF TRANSPORTATION

STP-1928(200)

WIN 19282.00

BRIDGE NO. 5661

BRIDGE PLANS

PROJ. MANAGER	NATE BENOIT			
DESIGN-DETAILED	DOT	JTS	SEPT 2014	
CHECKED-REVIEWED	MJC	DOT/TWM	SEPT 2014	
DESIGN2-DETAILED2				
DESIGN3-DETAILED3				
REVISIONS 1				
REVISIONS 2				
REVISIONS 3				
REVISIONS 4				
FIELD CHANGES				

SIGNATURE

P.E. NUMBER

DATE

BRIDGE STREET BRIDGE
PRESUMPSCOT RIVER
WESTBROOK CUMBERLAND COUNTY

PIER SEAL & FOOTING

SHEET NUMBER

48

OF 74

Filename: ...\BRIDGE\MSTA\048_Pier_sht1.dgn Division: BRIDGE Username: common Date:9/15/2014

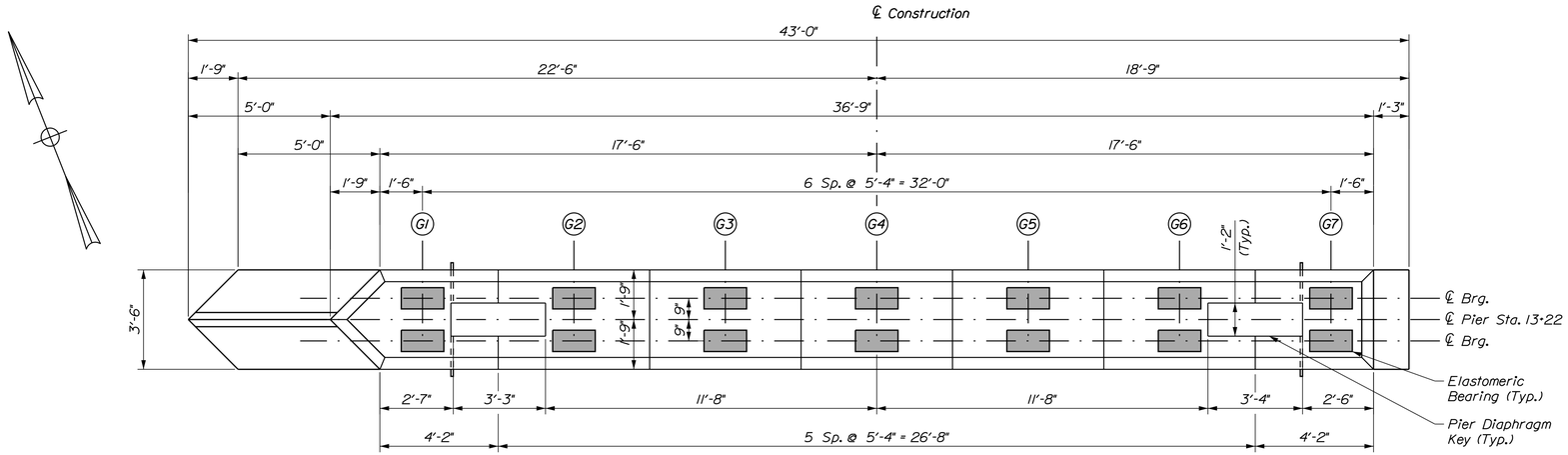

PLAN - PIER SHAFT

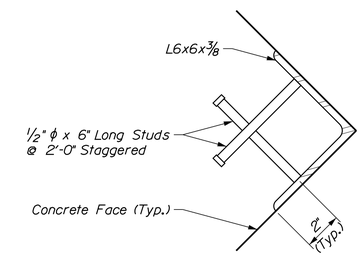

NOSE ARMOR DETAIL

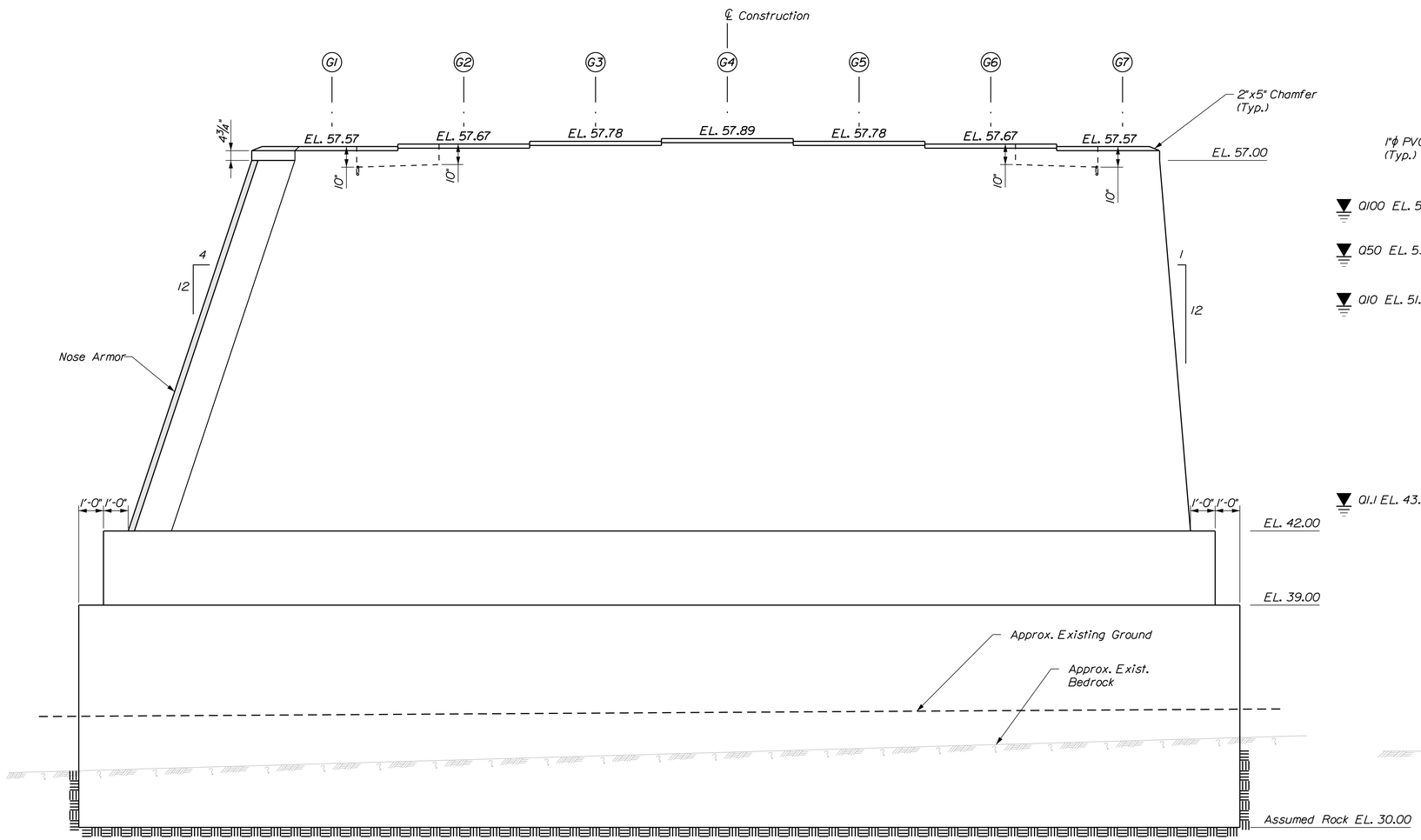

ELEVATION - PIER

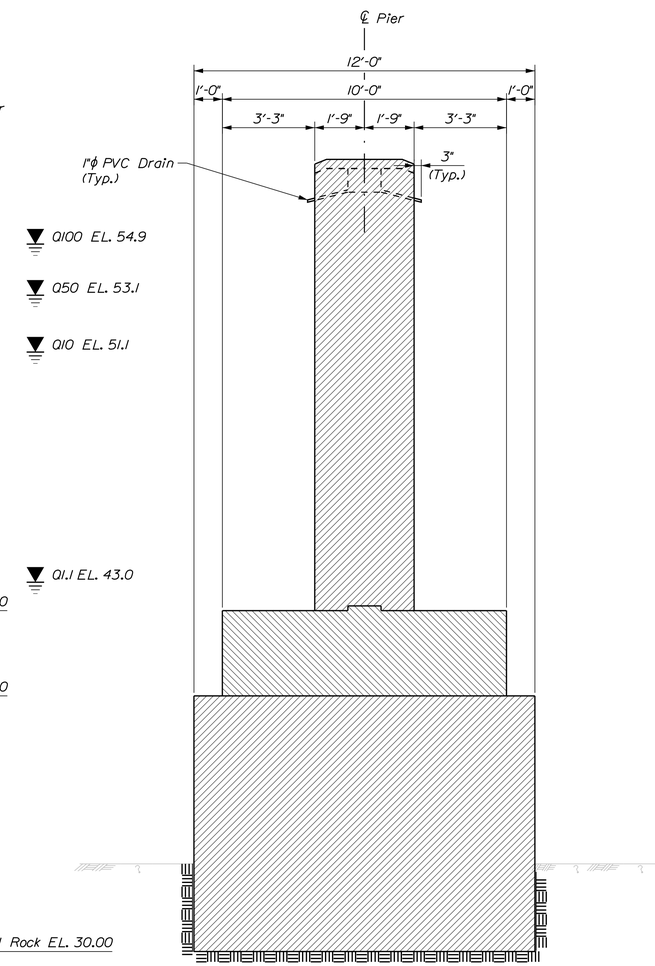

SECTION - PIER

Stantec

STATE OF MAINE
DEPARTMENT OF TRANSPORTATION

STP-1928(200)

WIN 19282.00

BRIDGE NO. 5661

BRIDGE PLANS

PROJ. MANAGER	NATE BENOIT	BY	DATE
DESIGN-DETAILED	DOT	JTS	SEPT 2014
CHECKED-REVIEWED	MJC	DOT/TWM	SEPT 2014
DESIGN2-DETAILED2			
DESIGN3-DETAILED3			
REVISIONS 1			
REVISIONS 2			
REVISIONS 3			
REVISIONS 4			
FIELD CHANGES			

SIGNATURE

P.E. NUMBER

DATE

BRIDGE STREET BRIDGE
PRESUMPSCOT RIVER
WESTBROOK CUMBERLAND COUNTY

PIER PLAN

SHEET NUMBER

49

OF 74

Filename: ...\BRIDGE\MSTA\049_Pier_sh12.dgn Division: BRIDGE Username: common Date:9/15/2014

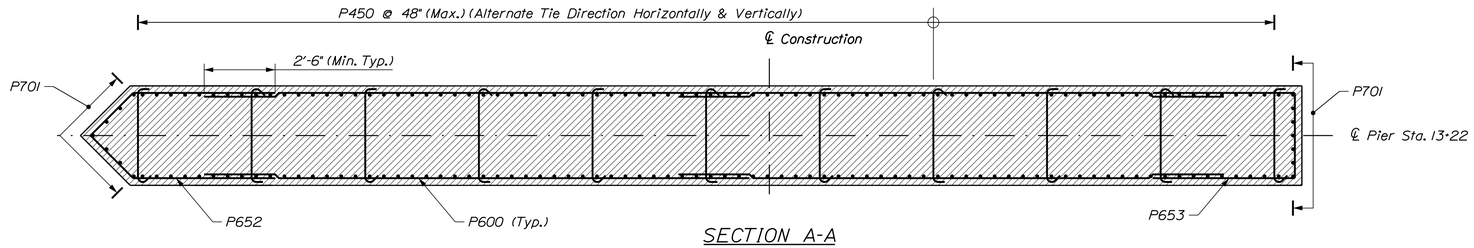

SECTION A-A

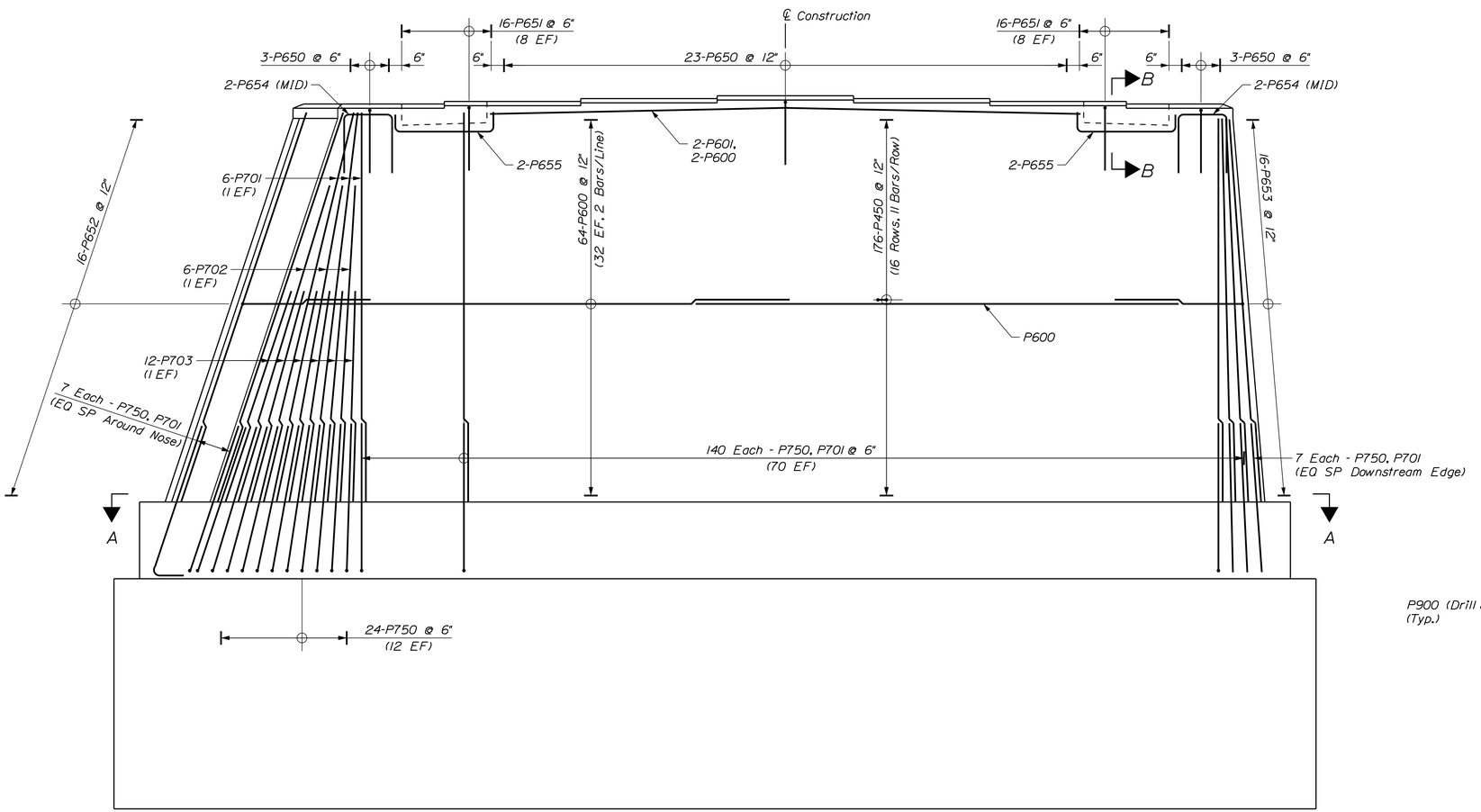

ELEVATION - PIER REINFORCING

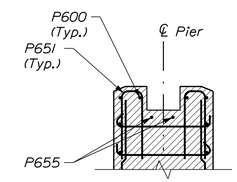

SECTION B-B

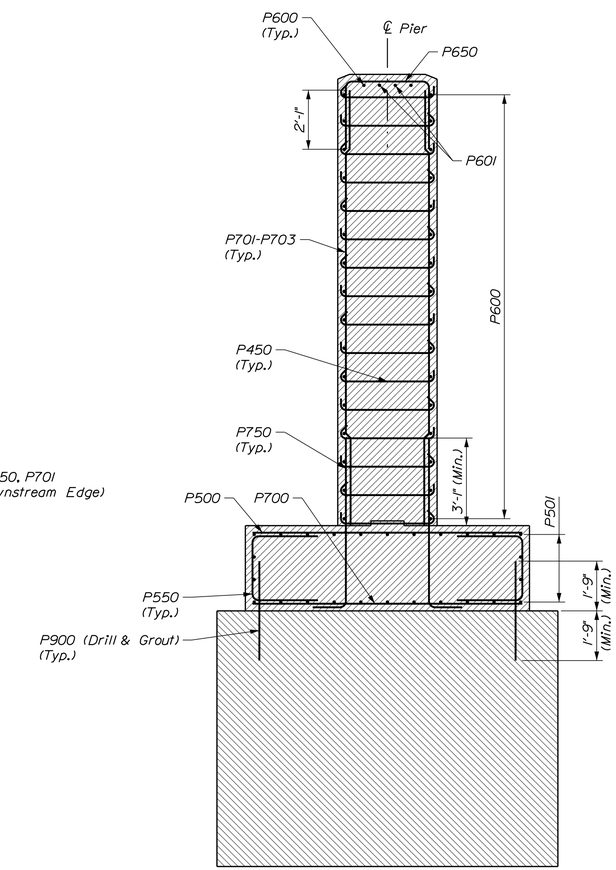

SECTION - PIER REINFORCING

LEGEND
NF = Near Face
FF = Far Face
EF = Each Face
MID = Middle

Stantec

STATE OF MAINE
DEPARTMENT OF TRANSPORTATION

STP-1928(200)

WIN 19282.00

BRIDGE NO. 5661

BRIDGE PLANS

		BY	DATE
PROJ. MANAGER	NATE BENOIT		
DESIGN-DETAILED	DDT	DDT	SEPT 2014
CHECKED-REVIEWED	MJC	DDT/TWM	SEPT 2014
DESIGN2-DETAILED2			
DESIGN3-DETAILED3			
REVISIONS 1			
REVISIONS 2			
REVISIONS 3			
REVISIONS 4			
FIELD CHANGES			

SIGNATURE

P.E. NUMBER

DATE

BRIDGE STREET BRIDGE
PRESUMPSCOT RIVER
WESTBROOK CUMBERLAND COUNTY

PIER REINFORCMENT

SHEET NUMBER

50

OF 74

Filename: ...\BRIDGE\MSTA\050_Pier_sht3.dgn Division: BRIDGE Username: common Date:9/15/2014

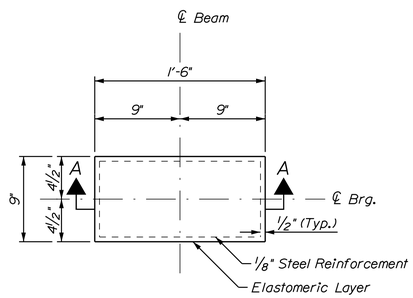

ELASTOMERIC BEARING PLAN
(28 Required, 7 at Each Abutment, 14 at Pier)

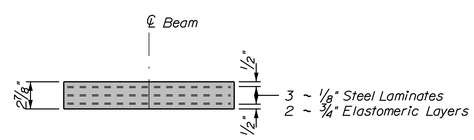

SECTION A-A

ELASTOMERIC BEARING NOTES

1. The elastomer shall have a nominal hardness of 60 durometer on the Hardness (Shore A) Scale (shear modulus 130 to 200 psi).

2. Vulcanizing of the elastomer to the steel plates shall be done during the primary mold process.

3. All bearings shall be marked prior to shipping. The marks shall include the bearing location on the bridge and a direction arrow that points upstation. All marks shall be permanent and shall be visible after the bearing is installed.

4. Bearings shall be covered during transit.

5. The bearings are designed so that the superstructure may be erected when the ambient air temperature is within the range of 65 °F and 90 °F. If the ambient air temperature is outside this range, the bearings shall be reset as directed by the Resident.

STATE OF MAINE
DEPARTMENT OF TRANSPORTATION

STP-1928(200)

WIN 19282.00

BRIDGE NO. 5661

BRIDGE PLANS

PROJ. MANAGER	NATE BENOIT	BY	DATE
DESIGN-DETAILED	DDT	DDT	SEPT 2014
CHECKED-REVIEWED	JHH	DDT/TWM	SEPT 2014
DESIGN2-DETAILED2			
DESIGN3-DETAILED3			
REVISIONS 1			
REVISIONS 2			
REVISIONS 3			
REVISIONS 4			
FIELD CHANGES			

SIGNATURE

P.E. NUMBER

DATE

BRIDGE STREET BRIDGE
PRESUMPSCOT RIVER
WESTBROOK CUMBERLAND COUNTY

BEARING DETAILS

SHEET NUMBER
51
OF 74

Stantec

Filename: ...\BRIDGE\MSTA\051_Bearings.dgn Division: BRIDGE Username: common Date:9/15/2014

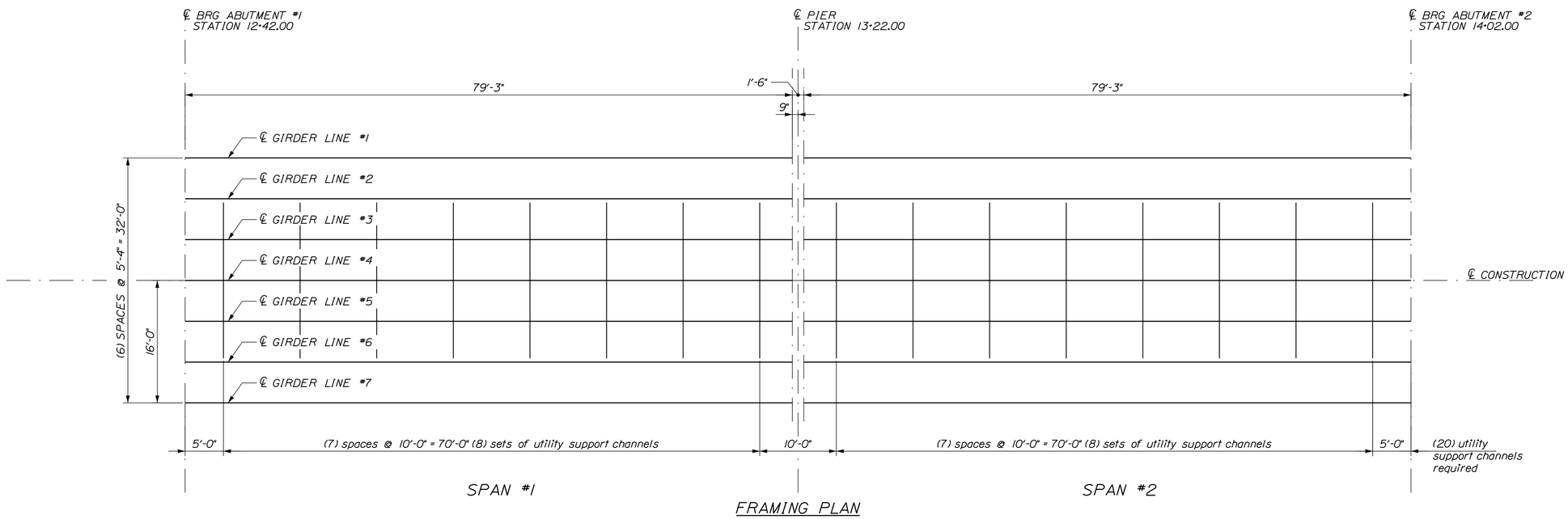

FRAMING PLAN

HYBRID-COMPOSITE BEAM NOTES

1. Hybrid-Composite Beam Notes pertain to this sheet and the next 4 sheets.

2. Cost of Shear connectors shall be considered incidental to Hybrid-Composite beams (HCB's), no separate payment shall be made.

3. The concrete compression reinforcement in the HCB's shall be furnished and installed by the contractor. The compression reinforcement will not be paid for separately, and shall be included in the cost of the Hybrid-Composite Beams.

4. Compression reinforcement in the HCB shall be Self-Consolidating Concrete (SCC), f'_c = 6,000 psi See Special Provision. Compression reinforcement shall reach a minimum strength of 3,750 psi prior to casting the deck concrete.

5. Tension reinforcement in the HCB shall be ½" diameter 270 ksi strands meeting the requirements of ASTM A416 Seven Wire Prestressing strands. The Strands shall be galvanized in accordance with ASTM A475.

6. Shear Connectors shall be ASTM A615 Reinforcing Steel and shall be Galvanized in accordance with ASTM A767.

7. The FRP shell Laminate shall be a glass reinforced, vinyl ester polymer conforming to the requirements of the Special Provision for the Hybrid Composite Beams.

8. The compression reinforcement may be precast at the contractors option, if the compression reinforcment is precast the beams may only be lifted from the chimneys at each end of the beam, the design of the lifting device shall be the responsibility of the contractor. Lifting devices to be left within the permanent structure of the beam shall be hot dip galvanized. Lifting may be done with a sling angle of 60° or greater from the horizontal.

9. The weight of a single FRP HC Beam shell, with steel strands, but without the compression reinforcement is approximately 6,000 lbs. The weight of an HC Beam with the compression reinforcement is approximately 19,000 lbs

10. The 0-Axis of the quad weave fabric shall be oriented along the longitudinal axis of the beams in building up the FRP Shell.

11. Place shear connectors, arch reinforcement, continuity bars, pier and abutment diaphragm bars through chimneys, and utility support anchor rods prior to placing SCC for compression reinforcement.

12. See Special Provision Section 509 for details on the requirements of the Hybrid-Composite Beam Demonstration Project that involves FRP witness panels, live load deflection testing and survey, and camber and deflection measurements at various construction stages.

STATE OF MAINE
DEPARTMENT OF TRANSPORTATION

STP-1928(200)

WIN 19282.00

BRIDGE NO. 5681

BRIDGE PLANS

STATE OF MAINE
ERIC T. CALDERWOOD
No. 9099
LICENSED
PROFESSIONAL ENGINEER

SIGNATURE			
P.E. NUMBER			
DATE			

PROJ. MANAGER STEPHEN BODGE			
DESIGN-DETAILED	ETC	ETC	MAR. 2013
CHECKED-REVIEWED	DOT	DOT/TWM	OCT. 2013
DESIGN2-DETAILED2			
DESIGN3-DETAILED3			
REVISIONS 1			
REVISIONS 2			
REVISIONS 3			
REVISIONS 4			
FIELD CHANGES			

BRIDGE STREET BRIDGE
PRESUMPSCOT RIVER
WESTBROOK CUMBERLAND COUNTY

FRAMING PLAN

SHEET NUMBER

52

OF 74

Stantec

CALDERWOOD ENGINEERING
P.O. BOX 1 - 225 RIVER ROAD
N.W. RICHMOND, ME 04357
TEL (207) 737-2007 FAX (207) 737-2008

Filename: ...\MSTA\052_HCBeam_Details1.dgn Division: BRIDGE Username: common Date:9/15/2014

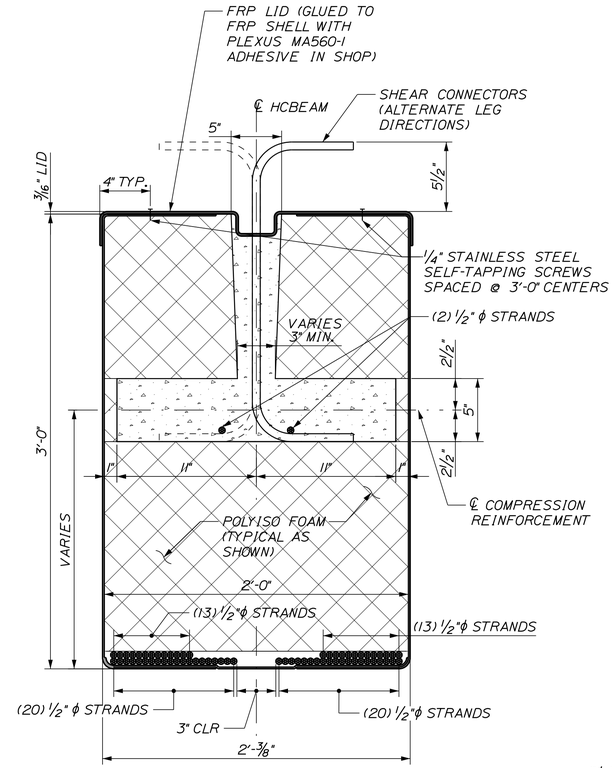

SECTION A-A

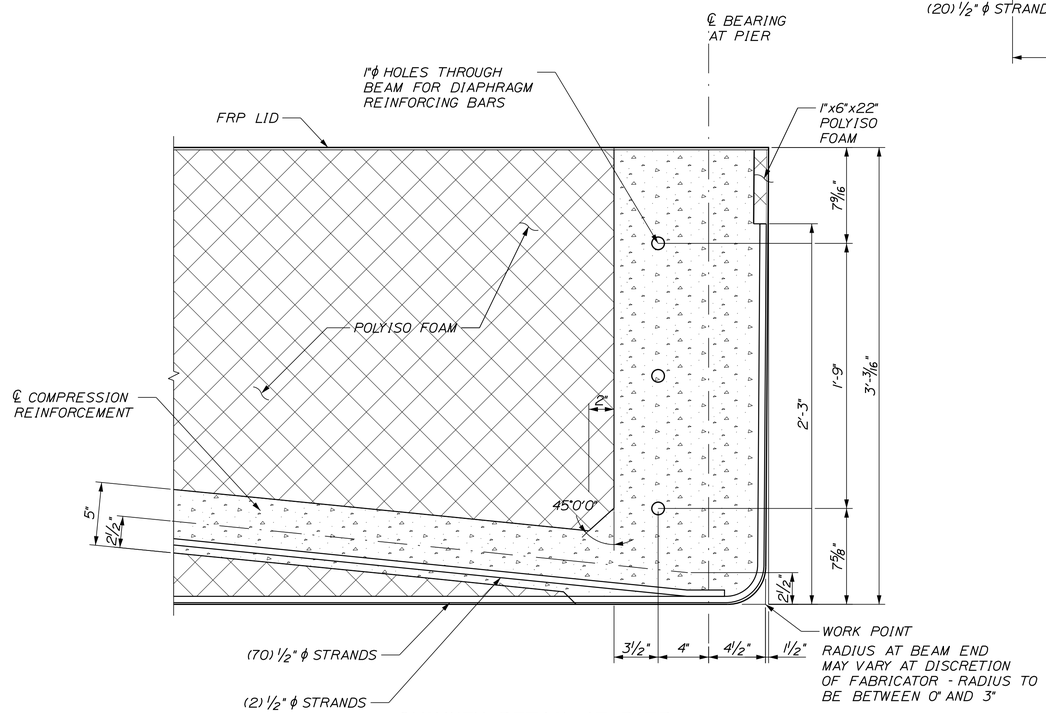

CHIMNEY DETAIL AT PIER

(note 1 1/2" dimension is without any deflection, as measured in mold)

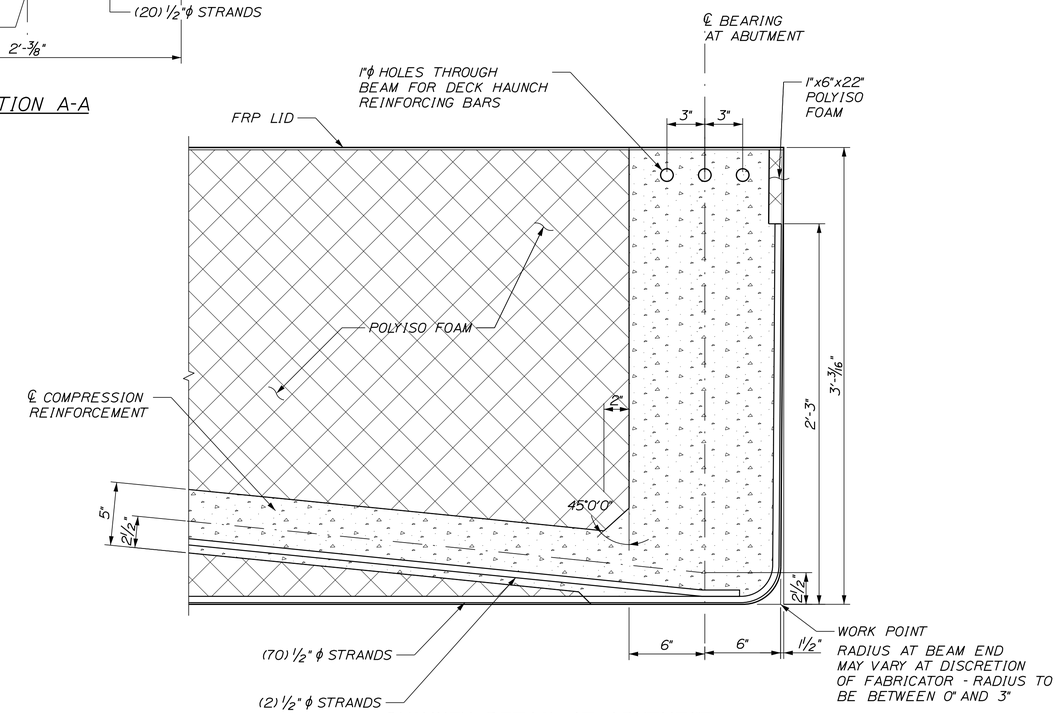

CHIMNEY DETAIL AT ABUTMENT

(note 1 1/2" dimension is without any deflection, as measured in mold)

Stantec

CALDERWOOD ENGINEERING
P.O. BOX 222 RIVER ROAD
W. RICHMOND, ME 04357
PH. (207) 737-2007 FAX (207) 737-2008

STATE OF MAINE
DEPARTMENT OF TRANSPORTATION

STP-1928(200)

WIN 19282.00

BRIDGE PLANS

BRIDGE NO.: 5661

STATE OF MAINE
ERIC T. CALDERWOOD
No. 5098
LICENSED
PROFESSIONAL ENGINEER

SIGNATURE		
P.E. NUMBER		
DATE		

PROJ. MANAGER	STEPHEN BODGE	
DESIGN-DETAILED	ETC	MAR. 2013
CHECKED-REVIEWED	DOT	OCT 2013
DESIGN2-DETAILED2	ETC	DOT/TWM
DESIGN3-DETAILED3	DOT	
REVISIONS 1		
REVISIONS 2		
REVISIONS 3		
REVISIONS 4		
FIELD CHANGES		

BRIDGE STREET BRIDGE
PRESUMPSCOT RIVER
WESTBROOK CUMBERLAND COUNTY

HCB TYPICAL SECTIONS AND CHIMNEY DETAILS

SHEET NUMBER

53

OF 74

Filename: ...\MSTA\053_HCBeam_Details2.dgn Division: BRIDGE Username: common Date:9/15/2014

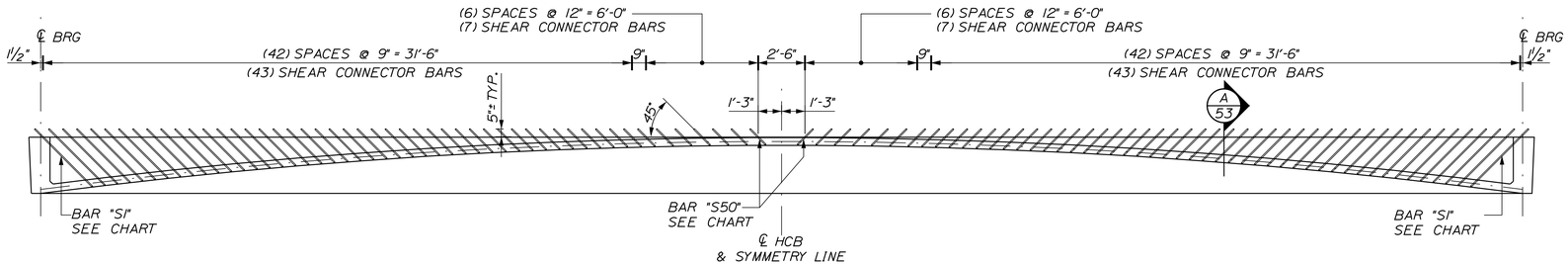

REINFORCING BEAM ELEVATION

ALL G6XX BARS TO BE
HOT DIP GALVANIZED (HDG)

SHEAR CONNECTORS

BAR	PC. MK.	'A'	LENGTH	BAR	PC. MK.	'A'	LENGTH
S1	G650	4'-4½"	5'-5½"	S26	G673	2'-1¾"	3'-2¾"
S2	G651	4'-3¼"	5'-4¼"	S27	G674	2'-0"	3'-1"
S3	G652	4'-2"	5'-3"	S28	G674	2'-0"	3'-1"
S4	G653	4'-½"	5'-11½"	S29	G675	1'-11"	3'-0"
S5	G654	3'-11¼"	5'-1¼"	S30	G675	1'-11"	3'-0"
S6	G655	3'-10"	4'-11"	S31	G676	1'-9½"	2'-10½"
S7	G656	3'-8½"	4'-9½"	S32	G676	1'-9½"	2'-10½"
S8	G657	3'-7½"	4'-8½"	S33	G677	1'-8½"	2'-9½"
S9	G658	3'-6¼"	4'-7¼"	S34	G677	1'-8½"	2'-9½"
S10	G659	3'-5"	4'-6"	S35	G678	1'-7¼"	2'-8¼"
S11	G660	3'-4"	4'-5"	S36	G678	1'-7¼"	2'-8¼"
S12	G661	3'-2¾"	4'-3¾"	S37	G679	1'-6¼"	2'-7¼"
S13	G662	3'-1½"	4'-2½"	S38	G679	1'-6¼"	2'-7¼"
S14	G663	3'-½"	4'-1½"	S39	G680	1'-5½"	2'-6½"
S15	G664	2'-11½"	3'-0½"	S40	G680	1'-5½"	2'-6½"
S16	G665	2'-10½"	3'-11½"	S41	G681	1'-4½"	2'-5½"
S17	G666	2'-9½"	3'-10½"	S42	G681	1'-4½"	2'-5½"
S18	G667	2'-8½"	3'-9½"	S43	G681	1'-4½"	2'-5½"
S19	G668	2'-7½"	3'-8½"	S44	G682	1'-3½"	2'-4½"
S20	G669	2'-6½"	3'-7½"	S45	G682	1'-3½"	2'-4½"
S21	G670	2'-5½"	3'-6½"	S46	G682	1'-3½"	2'-4½"
S22	G671	2'-4¾"	3'-5¾"	S47	G683	1'-2½"	2'-3½"
S23	G672	2'-3½"	3'-4½"	S48	G683	1'-2½"	2'-3½"
S24	G672	2'-3½"	3'-4½"	S49	G683	1'-2½"	2'-3½"
S25	G673	2'-1¾"	3'-2¾"	S50	G683	1'-2½"	2'-3½"

REBAR QUANTITIES

BENT BARS

PC. MK.	QUANTITY (per BEAM)	TOTAL (for ALL BEAMS)	PC. MK.	QUANTITY (per BEAM)	TOTAL (for ALL BEAMS)
G650	2	28	G667	2	28
G651	2	28	G668	2	28
G652	2	28	G669	2	28
G653	2	28	G670	2	28
G654	2	28	G671	2	28
G655	2	28	G672	4	56
G656	2	28	G673	4	56
G657	2	28	G674	4	56
G658	2	28	G675	4	56
G659	2	28	G676	4	56
G660	2	28	G677	4	56
G661	2	28	G678	4	56
G662	2	28	G679	4	56
G663	2	28	G680	4	56
G664	2	28	G681	6	84
G665	2	28	G682	6	84
G666	2	28	G683	8	112

DIAPHRAGM & DECK HAUNCH THROUGH CHIMNEY BARS

PC. MK.	QUANTITY (per BEAM)	TOTAL (for ALL BEAMS)	LENGTH
G601	3	42	5'-0"
G682	3	42	4'-7"

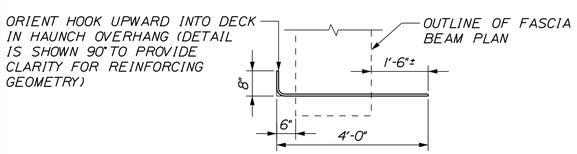

FASCIA DIAPHRAGM & DECK HAUNCH THROUGH BARS (HOT DIP GALV.) INSERT THROUGH CHIMNEY. PRIOR TO CASTING COMPRESSION REINFORCING CONCRETE

G682

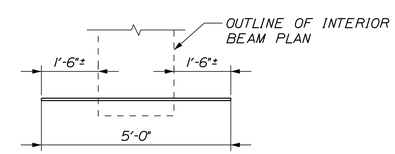

BEAMS G2 THROUGH G6 DIAPHRAGM & DECK HAUNCH THROUGH BARS (HOT DIP GALV.) INSERT THROUGH CHIMNEY. PRIOR TO CASTING COMPRESSION REINFORCING CONCRETE

G601

STATE OF MAINE
DEPARTMENT OF TRANSPORTATION

STP-1928(200)

WIN 19282.00

BRIDGE PLANS

BRIDGE NO.: 5681

STATE OF MAINE
ERIC T. CALDERWOOD
No. 14098
LICENSED
PROFESSIONAL ENGINEER

PROJ. MANAGER STEPHEN BODGE	BY	DATE
DESIGN-DETAILED	ETC	MAR 2013
CHECKED-REVIEWED	DOT	OCT 2013
DESIGN2-DETAILED2	DOT/TWM	
DESIGN3-DETAILED3		
REVISIONS 1		
REVISIONS 2		
REVISIONS 3		
REVISIONS 4		
FIELD CHANGES		

SIGNATURE

P.E. NUMBER

DATE

BRIDGE STREET BRIDGE
PRESUMPSCOT RIVER
WESTBROOK CUMBERLAND COUNTY

HCB REINFORCING DETAILS

Stantec

CALDERWOOD ENGINEERING
222 RIVER ROAD
RICHMOND, ME 04357
PH. (207) 737-2007 FAX (207) 737-2008

SHEET NUMBER

54

OF 74

Filename: ...\MSTA\054_HCBeam_Details3.dgn Division: BRIDGE Username: common Date:9/15/2014

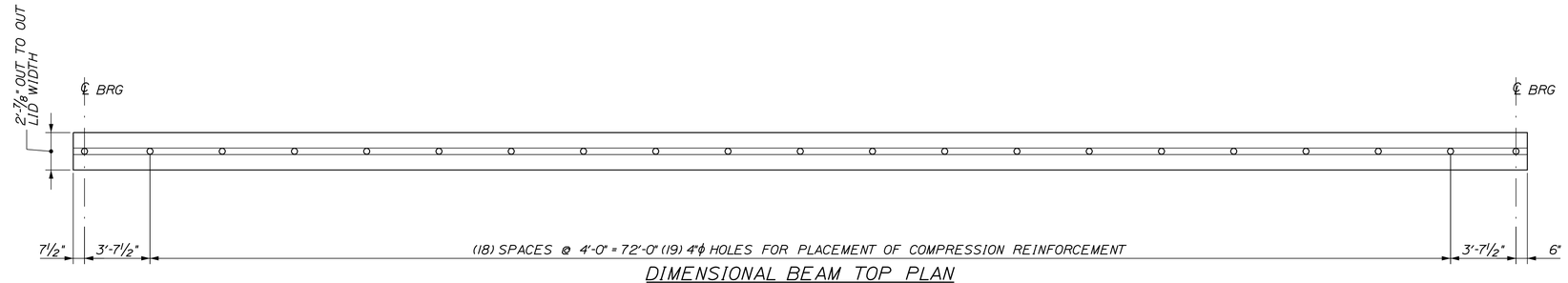

DIMENSIONAL BEAM TOP PLAN

1" HOLES FOR INSTALLATION OF SHEAR REINFORCING AND FOR THREADROD TO SUPPORT UTILITY SUPPORT CHANNELS ARE NOT SHOWN. ALIGN HOLES FOR SHEAR REINFORCING AS DIMENSIONED IN THE REINFORCING ELEVATION DETAIL ALIGN HOLES FOR UTILITY SUPPORT CHANNELS WITH UTILITY SUPPORT DETAILS AND FRAMING PLAN

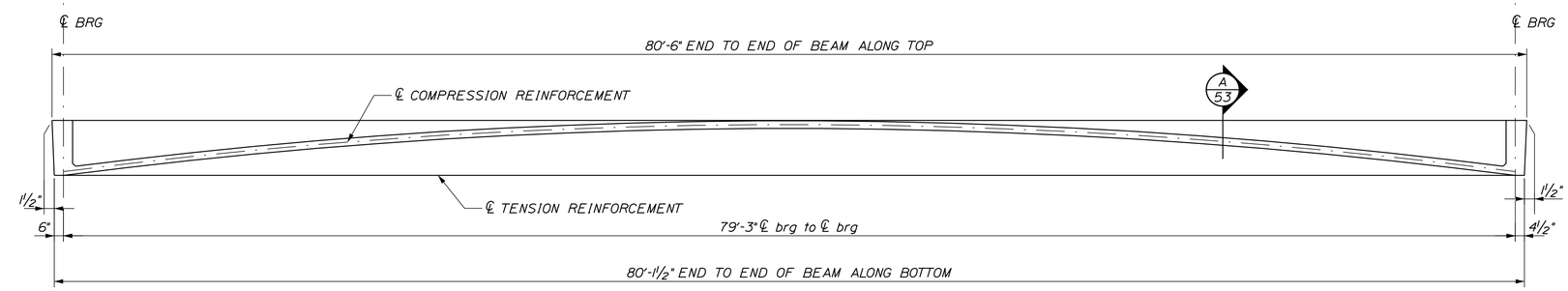

DIMENSIONAL BEAM ELEVATION

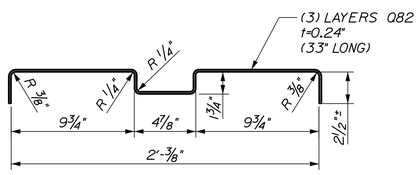

FRP LID LAYUP

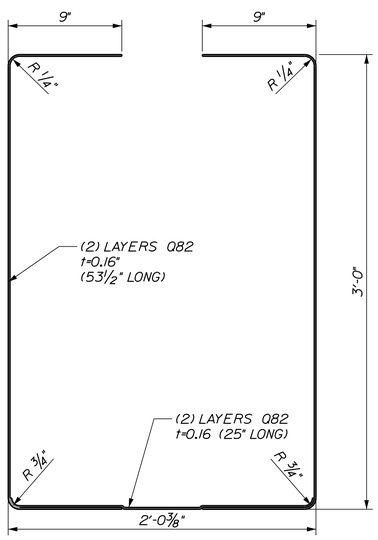

FRP SHELL LAYUP

BOTTOM OF SLAB ELEVATIONS

					Span #1						
	Abut #1										Pier #1
	CL Brg	8.00	16.00	24.00	32.00	40.00	48.00	56.00	64.00	72.00	Cl Pier
G1	60.70	60.86	61.00	61.10	61.17	61.21	61.23	61.21	61.16	61.08	60.99
G2	60.81	61.01	61.17	61.29	61.37	61.41	61.42	61.39	61.33	61.23	61.09
G3	60.92	61.11	61.28	61.40	61.48	61.51	61.53	61.50	61.44	61.33	61.20
G4	61.02	61.22	61.38	61.50	61.58	61.62	61.63	61.60	61.54	61.44	61.31
G5	60.92	61.11	61.28	61.40	61.48	61.51	61.53	61.50	61.44	61.33	61.20
G6	60.81	61.01	61.17	61.29	61.37	61.41	61.42	61.39	61.33	61.23	61.09
G7	60.70	60.86	61.00	61.10	61.17	61.21	61.23	61.21	61.16	61.08	60.99

					Span #2						
	Pier #1										Abut #2
	Cl Pier	8.00	16.00	24.00	32.00	40.00	48.00	56.00	64.00	72.00	CL Brg
G1	60.99	61.08	61.16	61.21	61.23	61.21	61.17	61.10	61.00	60.86	60.70
G2	61.09	61.23	61.33	61.39	61.42	61.41	61.37	61.29	61.17	61.01	60.81
G3	61.20	61.33	61.44	61.50	61.53	61.51	61.48	61.40	61.28	61.11	60.92
G4	61.31	61.44	61.54	61.60	61.63	61.62	61.58	61.50	61.38	61.22	61.02
G5	61.20	61.33	61.44	61.50	61.53	61.51	61.48	61.40	61.28	61.11	60.92
G6	61.09	61.23	61.33	61.39	61.42	61.41	61.37	61.29	61.17	61.01	60.81
G7	60.99	61.08	61.16	61.21	61.23	61.21	61.17	61.10	61.00	60.86	60.70

Stantec

CALDERWOOD ENGINEERING
222 RIVER ROAD
RICHMOND, ME 04357
PH. (207) 737-2007 FAX (207) 737-2008

STATE OF MAINE
DEPARTMENT OF TRANSPORTATION

STP-1928(200)

WIN 19282.00

BRIDGE PLANS

BRIDGE NO.: 5661

STATE OF MAINE
ERIC T. CALDERWOOD
No. 9099
LICENSED
PROFESSIONAL ENGINEER

SIGNATURE
P.E. NUMBER
DATE

		BY	DATE
PROJ. MANAGER	STEPHEN BOGGE		
DESIGN-DETAILED		ETC	MAR 2013
CHECKED-REVIEWED		DOT	OCT 2013
DESIGN2-DETAILED2			
DESIGN3-DETAILED3			
REVISIONS 1			
REVISIONS 2			
REVISIONS 3			
REVISIONS 4			
FIELD CHANGES			

BRIDGE STREET BRIDGE
PRESUMPSCOT RIVER
WESTBROOK CUMBERLAND COUNTY

FRP LAYUPS, BEAM PLAN & EL. & BOTTOM OF SLAB ELEVATIONS

SHEET NUMBER
55
OF 74

Filename: ...\MSTA\055_HCBeam_Details4.dgn Division: BRIDGE Username: common Date:9/15/2014

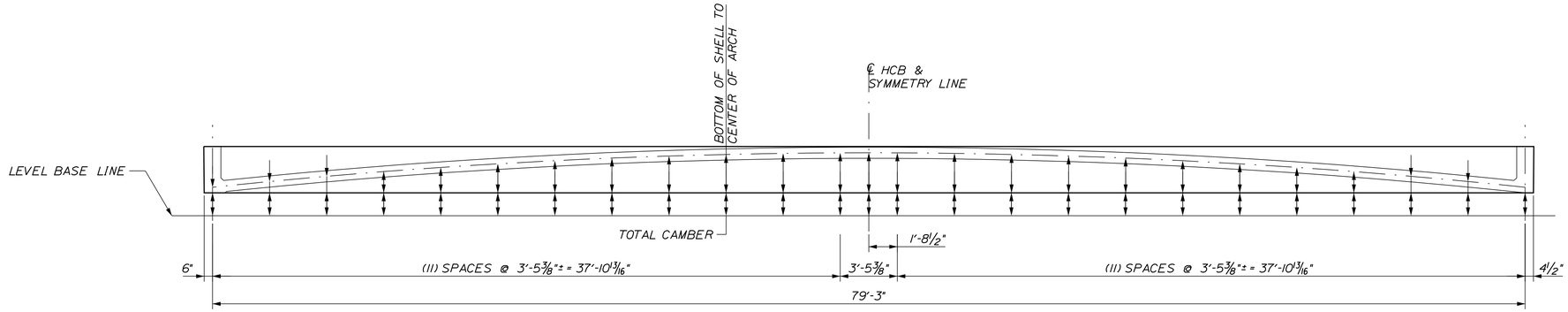

CAMBER DIAGRAM

SEE TABLES THIS SHEET FOR CAMBER AND ARCH INFORMATION DETAIL IS NOT TO SCALE

TABLE of CAMBER & DEFLECTIONS

GIRDER		ABUT ℄ BRG.	3.45'	*6.89'	10.34'	*13.78'	17.23'	*20.67'	24.12'	*27.57'	31.01'	*34.46'	37.90'	*39.63' ½ SPAN	41.34'	*44.79'	48.24'	*51.68'	55.13'	*58.58'	62.02'	*65.47'	68.91'	*72.36'	75.80'	PIER ℄ BRG.
G1 & G7	SHELL	0	0.21	0.42	0.62	0.81	0.98	1.14	1.27	1.37	1.46	1.51	1.54	1.54	1.54	1.51	1.45	1.37	1.27	1.14	0.98	0.81	0.62	0.42	0.21	0
	ARCH	0	0.66	1.31	1.93	2.51	3.04	3.52	3.92	4.25	4.51	4.68	4.77	4.78	4.77	4.68	4.51	4.25	3.92	3.52	3.04	2.51	1.93	1.31	0.66	0
	DECK	0	0.52	1.01	1.45	1.84	2.17	2.46	2.68	2.86	2.99	3.08	3.12	3.13	3.12	3.08	2.99	2.86	2.68	2.46	2.17	1.84	1.45	1.01	0.52	0
	SIDC + DW	0	0.07	0.13	0.19	0.25	0.30	0.34	0.37	0.39	0.40	0.41	0.40	0.39	0.38	0.36	0.33	0.29	0.25	0.21	0.16	0.12	0.08	0.04	0.02	0
	RESIDUAL	0	0.04	0.07	0.08	0.08	0.08	0.07	0.08	0.07	0.07	0.06	0.06	0.07	0.08	0.11	0.15	0.17	0.20	0.20	0.22	0.21	0.19	0.16	0.09	0
	VERTICAL CURVE	0	0.19	0.25	0.38	0.50	0.56	0.63	0.69	0.75	0.81	0.81	0.88	0.94	0.88	0.81	0.81	0.75	0.69	0.63	0.56	0.50	0.38	0.25	0.19	0
	TOTAL CAMBER	0	1.69	3.19	4.65	5.99	7.13	8.16	9.01	9.69	10.24	10.55	10.77	10.85	10.77	10.55	10.24	9.69	9.01	8.16	7.13	5.99	4.65	3.19	1.69	0
G2 - G6	SHELL	0	0.21	0.42	0.62	0.81	0.98	1.14	1.27	1.37	1.46	1.51	1.54	1.54	1.54	1.51	1.45	1.37	1.27	1.14	0.98	0.81	0.62	0.42	0.21	0
	ARCH	0	0.66	1.31	1.93	2.51	3.04	3.52	3.92	4.25	4.51	4.68	4.77	4.78	4.77	4.68	4.51	4.25	3.92	3.52	3.04	2.51	1.93	1.31	0.66	0
	DECK	0	0.57	1.10	1.56	1.96	2.30	2.59	2.82	2.99	3.12	3.21	3.25	3.26	3.25	3.21	3.12	2.99	2.82	2.59	2.30	1.96	1.56	1.10	0.57	0
	SIDC + DW	0	0.06	0.11	0.16	0.21	0.25	0.28	0.31	0.33	0.34	0.34	0.33	0.33	0.32	0.30	0.27	0.24	0.21	0.17	0.13	0.10	0.06	0.04	0.02	0
	RESIDUAL	0	0.00	0.00	0.00	0.00	0.00	0.00	0.00	0.00	0.00	0.00	0.00	0.00	0.01	0.04	0.08	0.09	0.10	0.11	0.12	0.11	0.10	0.07	0.04	0
	VERTICAL CURVE	0	0.19	0.25	0.38	0.50	0.56	0.63	0.69	0.75	0.81	0.81	0.88	0.94	0.88	0.81	0.81	0.75	0.69	0.63	0.56	0.50	0.38	0.25	0.19	0
	TOTAL CAMBER	0	1.69	3.19	4.65	5.99	7.13	8.16	9.01	9.69	10.24	10.55	10.77	10.85	10.77	10.55	10.24	9.69	9.01	8.16	7.13	5.99	4.65	3.19	1.69	0

-CAMBERS & DEFLECTION DIMENSIONS ARE IN INCHES
-HORIZONTAL DIMENSIONS ARE IN FEET

DIMENSIONS FROM BOTTOM of SHELL to CENTROID OF ARCH

	0' ℄ BRG.	3.45'	6.89'	10.34'	13.78'	17.23'	20.67'	24.12'	27.57'	31.01'	34.46'	37.90'	39.63' ½ SPAN	41.34'	44.79'	48.24'	51.68'	55.13'	58.58'	62.02'	65.47'	68.91'	72.36'	75.80'	79.25' ℄ BRG.
TYPICAL ALL GIRDERS	2.50	7.62'	12.27	16.46	20.18	23.43	26.22	28.55	30.41	31.81	32.74	33.20	33.26	33.20	32.74	31.81	30.41	28.55	26.22	23.43	20.18	16.46	12.27	7.62	2.50

-DIMENSIONS TO CENTROID ARE IN INCHES
-HORIZONTAL DIMENSIONS ARE IN FEET

CAMBER & DEFLECTION NOTES

1. Beam camber and deflections shall be measured by the Contractor at the span locations marked with an (*) in the Table of Camber & Deflections.

2. Deflection measurements shall be taken at the following phases:
   - After erection.
   - After compression reinforcement placement.
   - After concrete deck placement.
   - After curb, railing, and wearing surface placement.

3. Deflection measurements shall be kept in a log with a format approved by the Resident Engineer, with a copy submitted to the Resident Engineer.

4. The Contractor shall measure live load deflections during the live load testing performed by MaineDOT. See Special Provision Section 509 for further details..

Stantec

CALDERWOOD ENGINEERING
222 RIVER ROAD
P.O. BOX 1 - 7
RICHMOND, ME 04357
PH. (207) 737-2007 FAX (207) 737-2008

STATE OF MAINE
DEPARTMENT OF TRANSPORTATION

STP-1928(200)

WIN 19282.00

BRIDGE NO.: 5681

BRIDGE PLANS

STATE OF MAINE
ERIC T. CALDERWOOD
No. 8098
LICENSED PROFESSIONAL ENGINEER

	BY	DATE
PROJ. MANAGER STEPHEN BODGE		
DESIGN-DETAILED	ETC	MAR. 2013
CHECKED-REVIEWED	DOT	DOT/TWM	OCT 2013
DESIGN2-DETAILED2		
DESIGN3-DETAILED3		
REVISIONS 1		
REVISIONS 2		
REVISIONS 3		
REVISIONS 4		
FIELD CHANGES		

SIGNATURE

P.E. NUMBER

DATE

BRIDGE STREET BRIDGE
PRESUMPSCOT RIVER
WESTBROOK CUMBERLAND COUNTY

CAMBER, DEFLECTIONS & ARCH DIMENSIONS

SHEET NUMBER

56

OF 74

Filename: ...\MSTA\056_HCBeam_Details5.dgn Division: BRIDGE Username: common Date:9/15/2014

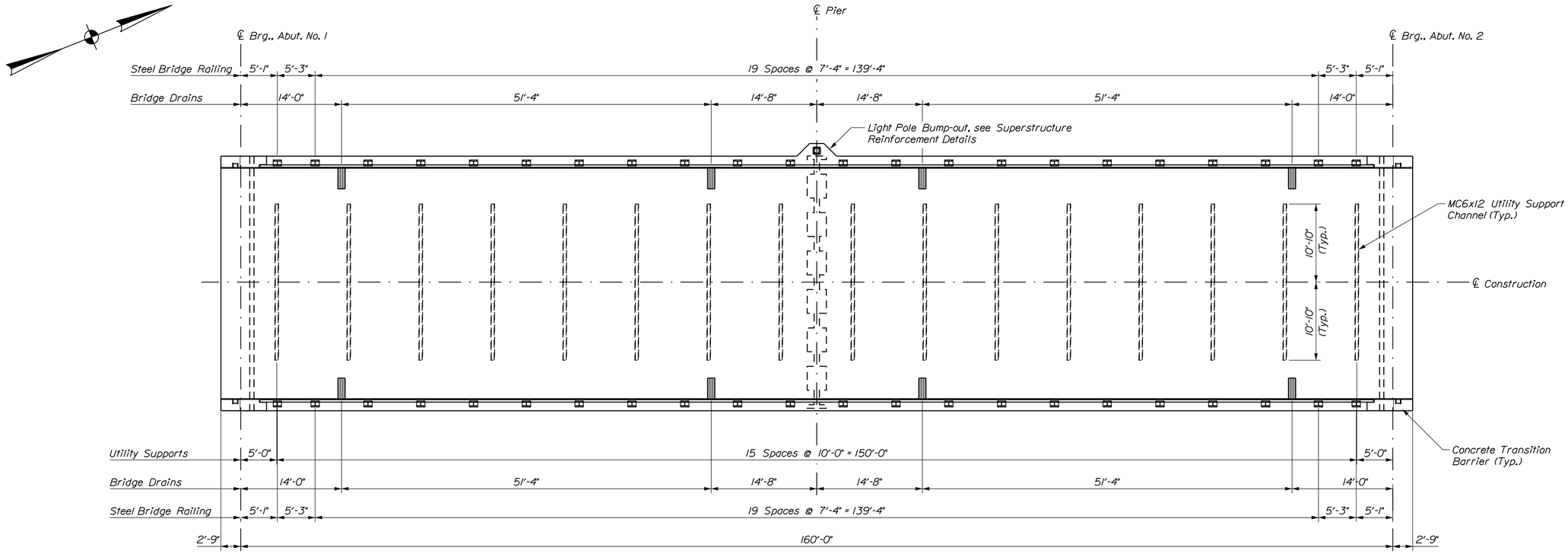

SUPERSTRUCTURE PLAN

SUPERSTRUCTURE NOTES

1. Form a 1 inch V-groove on the fascias at the horizontal joint between the curb and slab.

2. Reinforcing steel shall have a minimum cover of 2 inches unless otherwise noted or shown.

3. All reinforcing steel in the superstructure shall meet the requirements of Special Provision Section 503, Corrosion Resistant Reinforcing.

4. Adjust reinforcing steel to fit around the bridge drains in a manner approved by the Resident. Do not cut transverse reinforcing bars.

5. Provide 3 additional stirrups in the curbs at each rail post and transition barrier location.

6. The contractor shall install Transition Barrier vertical closed stirrups, as shown in the Standard Details Section 526 prior to the placement of the curb concrete.

7. Unless the superstructure slab concrete is placed in one continuous operation, the initial placement shall start at a simply supported end of the deck slab and shall terminate at the completion of a positive moment section. Successive placements shall proceed from the end of the previous placement, terminate at the completion of a positive moment section, and include two or more spans. Concrete in a placement shall be kept plastic one complete span behind the span being placed. A minimum of 5 days shall elapse between successive partial placements. The Resident shall approve the placement sequence of the superstructure slab concrete.

8. After Hybrid Composite Beams have been erected and compression reinforcement has reached a compressive strength of 4,200 PSI, the Contractor shall survey the Top of Beam elevations at intervals indicated in the "Bottom of Slab Elevations" Table. The Top of Beam Elevations shall be submitted to the Resident before setting screed rails.

9. Top of Curb elevations shall be set at 10' intervals based on bridge finish grade profile. The contractor shall submit curb elevations to Resident one week prior to placing curb.

10. Anchor rod shall meet the requirements of ASTM F1544 Gr. 50.

11. All utility support material shall be galvanized in accordance with ASTM A123, except that hardware shall meet the requirements of ASTM A153. All material, except hardware, shall be blast cleaned prior to galvanization in accordance with SSPC-SP6.

12. Bend or cut bars as directed by the Resident Engineer to provide 2" clear cover around the utility blockouts.

13. Payment for reinforcing steel fabricated, delivered and placed in the cast-in-place portion of the structural slab will be considered incidental to the appropriate Standard Specification Section 502 pay item.

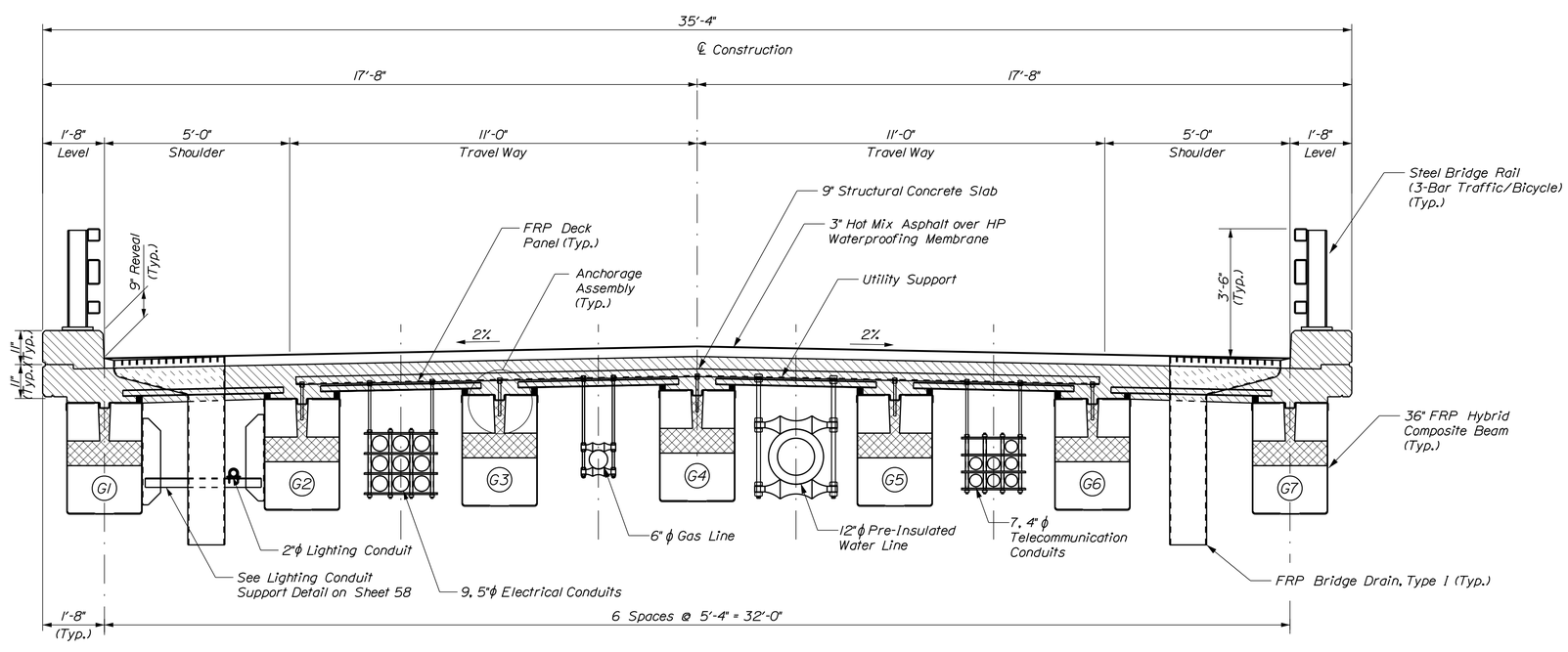

SUPERSTRUCTURE SECTION

Stantec

STATE OF MAINE
DEPARTMENT OF TRANSPORTATION

STP-1928(200)

WIN 19282.00

BRIDGE NO. 5661

BRIDGE PLANS

PROJ. MANAGER	NATE BENOIT		
DESIGN-DETAILED	ODT	JTS	SEPT 2014
CHECKED-REVIEWED	TWM	DOT/TWM	SEPT 2014
DESIGN2-DETAILED2			
DESIGN3-DETAILED3			
REVISIONS 1			
REVISIONS 2			
REVISIONS 3			
REVISIONS 4			
FIELD CHANGES			

SIGNATURE

P.E. NUMBER

DATE

BRIDGE STREET BRIDGE
PRESUMPSCOT RIVER
WESTBROOK CUMBERLAND COUNTY

SUPERSTRUCTURE 1

SHEET NUMBER

57

OF 74

Filename: ...\MSTA\057_Superstructure_1.dgn Division: BRIDGE Username: common Date:9/29/2014

FRP STAY-IN-PLACE FORM NOTES

1. Center FRP Stay-in-Place Form Panel joints about the ℄ utility support channel. Field cut/notch around utility support hanger threaded rods so that the panels can be connected together with a tongue-and-groove connection. Seal space between notch and threaded rod with an Approved caulking material from the MaineDOT Prequalified Materials List. Contractor shall test panel fit up at utility support threaded rods prior to panel bonding to the polystyrene foam temporary supports.

2. High-density expanded polystyrene foam temporary supports shall be attached to the outside edges of the beams with an adhesive applied in accordance with the manufacturer's published recommendations. The foam shall be field-cut to adjust the bottom-of-slab elevations as required.

3. After the FRP panels have been erected, adjusted and sealed, the void between the top of the beams and the bottom of the panels shall be filled with a non-shrink, flowable, cementitious grout with a design compressive strength of 6000 psi. The grout shall be one of the products listed on the Maine Department of Transportation's list of Pre-qualified Grout Materials for Keyways. The grout shall be mixed, placed and cured in accordance with the manufacturer's published recommendations. Vent holes shall be provided at 3 ft intervals to prevent air lock.

4. Mortar to be used for support under the deck panels shall have an approved high range water reducing additive.

5. FRP Stay-in-Place Form deflections shall be measured by the Contractor at 6 interior bay locations, 3 in each span. Measurements shall be located a minimum of 4'-0" from centerline of bearings and at the mid-point of the Stay-In-Place Form span.

6. The Contractor shall submit proposed measurement method and locations to be approved by the Resident. Deflection measurement locations and results shall be kept in a log with a format approved by the Resident, with a copy submitted to the Resident.

7. Deflection measurements shall be taken after concrete deck placement and before curb, railing, and wearing surface placement.

8. See Special Provision Section 530 for further details.

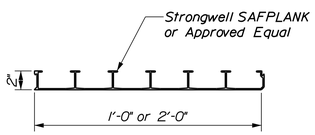

SECTION - FRP STAY-IN-PLACE FORM

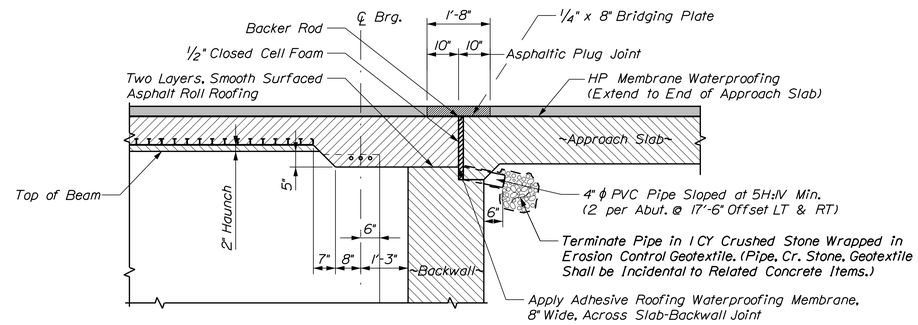

SECTION - TYPICAL END OF DECK

UTILITY SUPPORT NOTES

1. The anchoring material shall be one of the products listed on the Maine Department of Transportation List of Prequalified Type 2 Anchoring Materials. Installation shall be in accordance with the Manufacturer's recommendations.

2. The utility support channel shall be bent or cut and welded at the crown to follow the roadway slope prior to galvanizing at the fabricator's option.

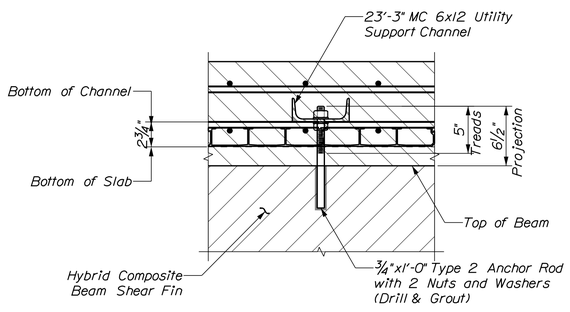

UTILITY ANCHORAGE ASSEMBLY

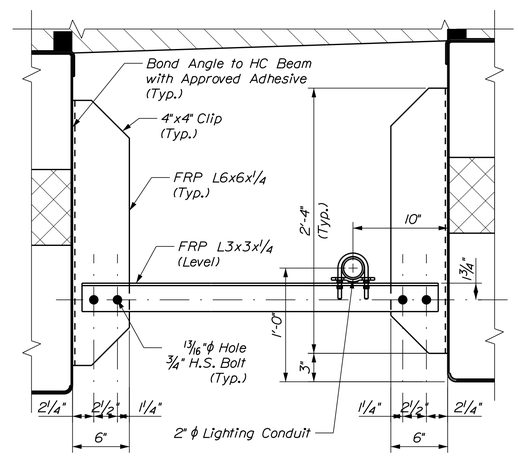

LIGHTING CONDUIT SUPPORT DETAIL

(Space @ 10' w/Utility Support Channels, 16 Support Assemblies Total)
(See Special Provision 509)

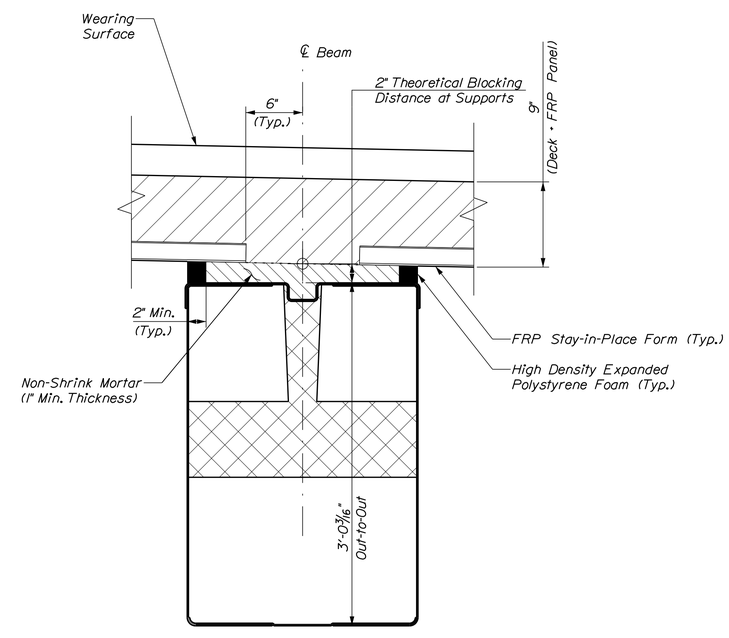

HAUNCH DETAIL

Stantec

STATE OF MAINE
DEPARTMENT OF TRANSPORTATION

STP-1928(200)

WIN 19282.00

BRIDGE NO. 5661

BRIDGE PLANS

PROJ. MANAGER	NATE BENOIT	BY	DATE
DESIGN-DETAILED	ODT	JTS	SEPT 2014
CHECKED-REVIEWED	TWM	DOT/TWM	SEPT 2014
DESIGN2-DETAILED2			
DESIGN3-DETAILED3			
REVISIONS 1			
REVISIONS 2			
REVISIONS 3			
REVISIONS 4			
FIELD CHANGES			

SIGNATURE

P.E. NUMBER

DATE

BRIDGE STREET BRIDGE
PRESUMPSCOT RIVER
WESTBROOK CUMBERLAND COUNTY

SUPERSTRUCTURE 2

SHEET NUMBER

58

OF 74

Filename: ...\MSTA\058_Superstructure_2.dgn Division: BRIDGE Username: common Date:9/15/2014

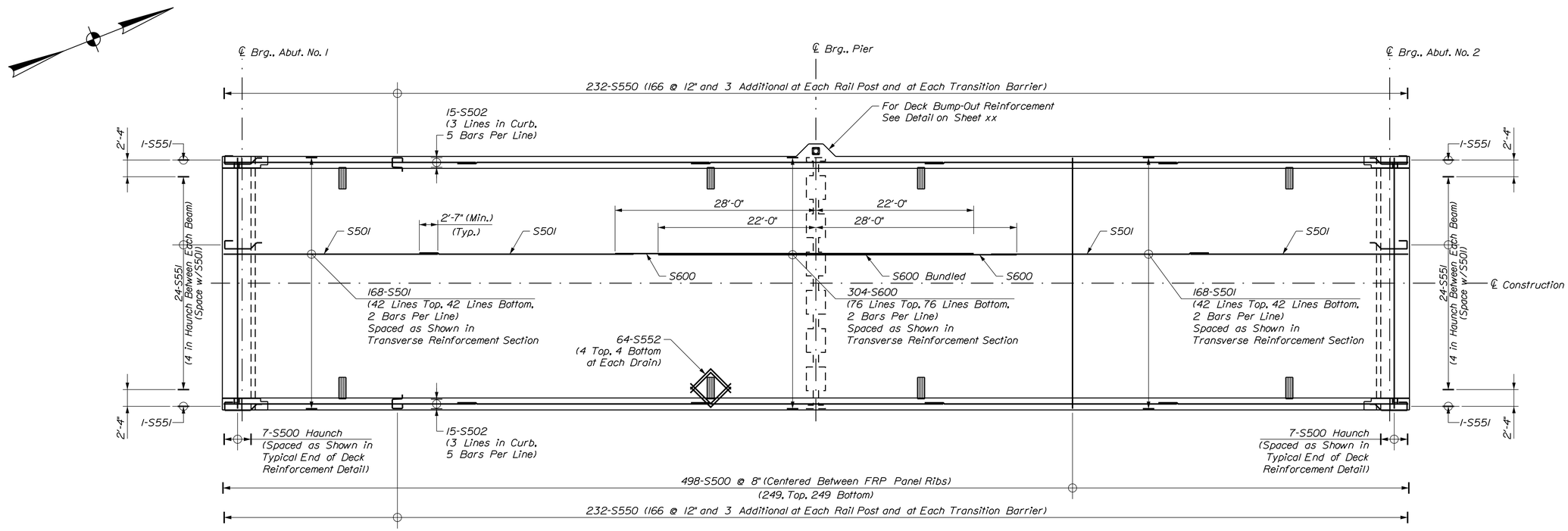

SUPERSTRUCTURE REINFORCEMENT PLAN

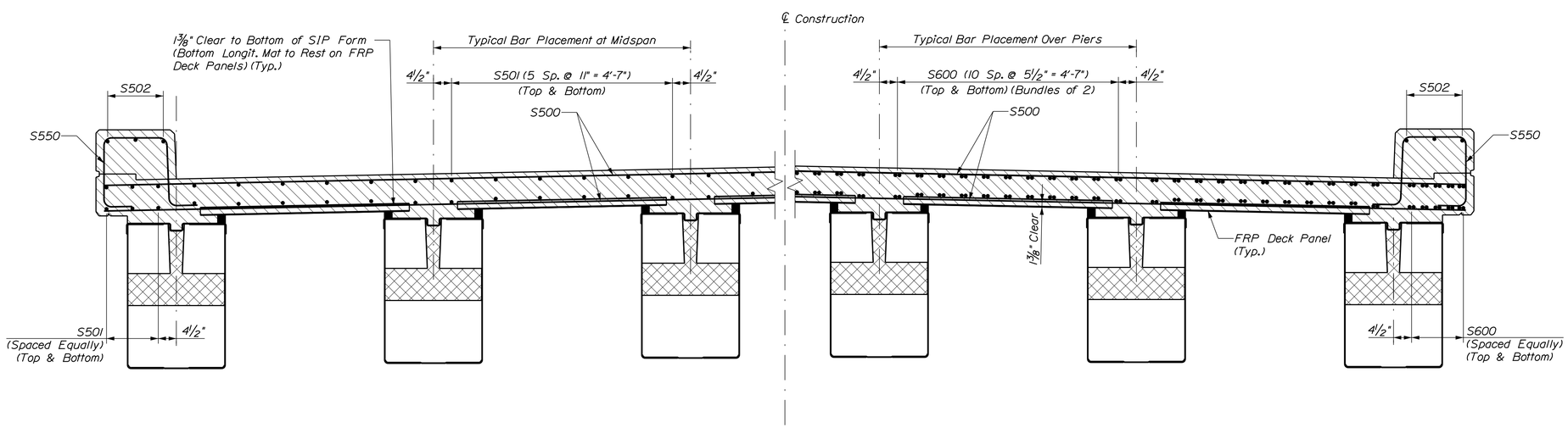

TRANSVERSE REINFORCEMENT SECTION

Stantec

STATE OF MAINE
DEPARTMENT OF TRANSPORTATION

STP-1928(200)

WIN 19282.00

BRIDGE NO. 5661

BRIDGE PLANS

PROJ. MANAGER	NATE BENOIT	BY	DATE
DESIGN-DETAILED	DOT	JTS	SEPT 2014
CHECKED-REVIEWED	JHH	DOT/TWM	SEPT 2014
DESIGN2-DETAILED2			
DESIGN3-DETAILED3			
REVISIONS 1			
REVISIONS 2			
REVISIONS 3			
REVISIONS 4			
FIELD CHANGES			

SIGNATURE

P.E. NUMBER

DATE

BRIDGE STREET BRIDGE
PRESUMPSCOT RIVER
WESTBROOK CUMBERLAND COUNTY

SUPERSTRUCTURE REINF. 1

SHEET NUMBER

59

OF 74

Filename: ...\059_Superstructure_Reinf_1.dgn Division: BRIDGE Username: common Date:9/15/2014

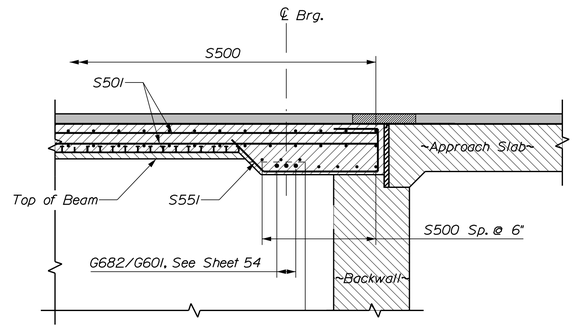

TYPICAL END OF DECK REINFORCEMENT

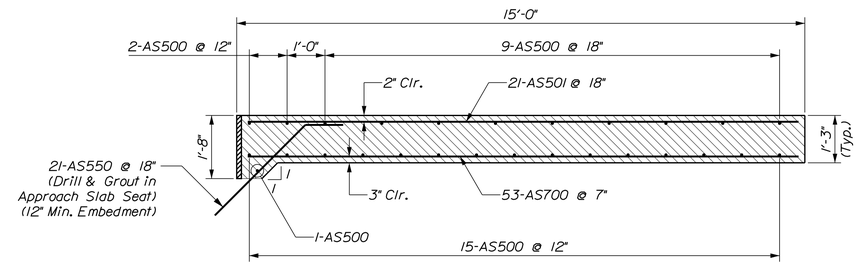

Notes:
1. The approach slab shall be 31'-0" wide, centered about the ℄ Construction.

2. The anchoring material shall be one of the products listed on the Maine Department of Transportation List of Prequalified Type 3 Anchoring Materials. Installation shall be in accordance with Manufacturer's recommendations.

TYPICAL APPROACH SLAB SECTION

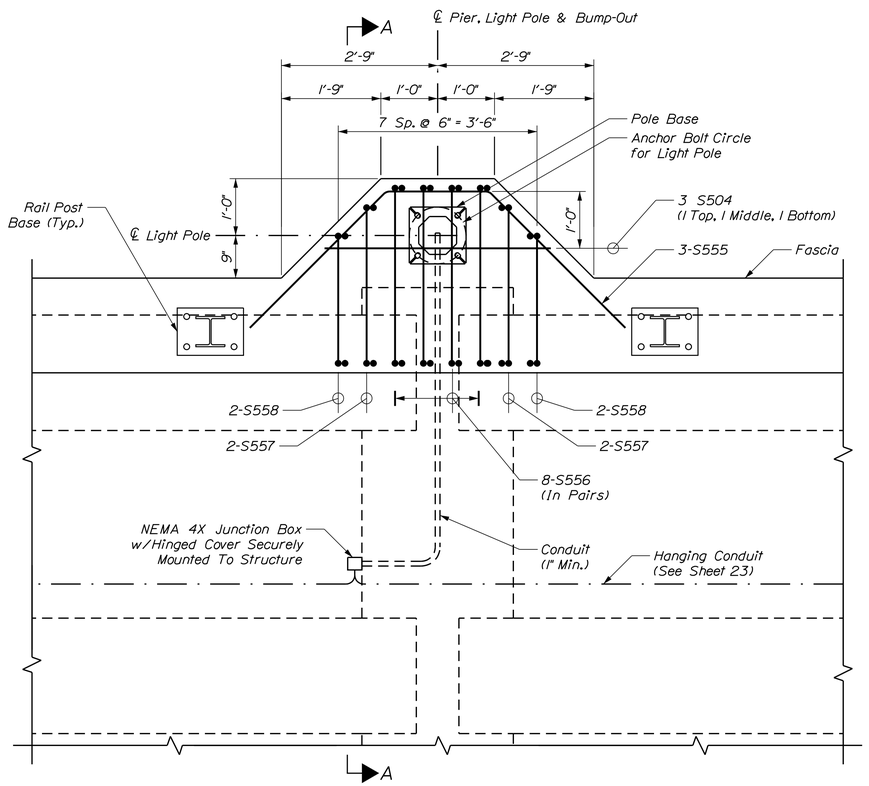

PLAN - LIGHT POLE BUMP-OUT
(Adjust Reinforcement to Avoid Anchor Rods and Conduits)
(Typical Deck Reinforcement Not Shown for Clarity)

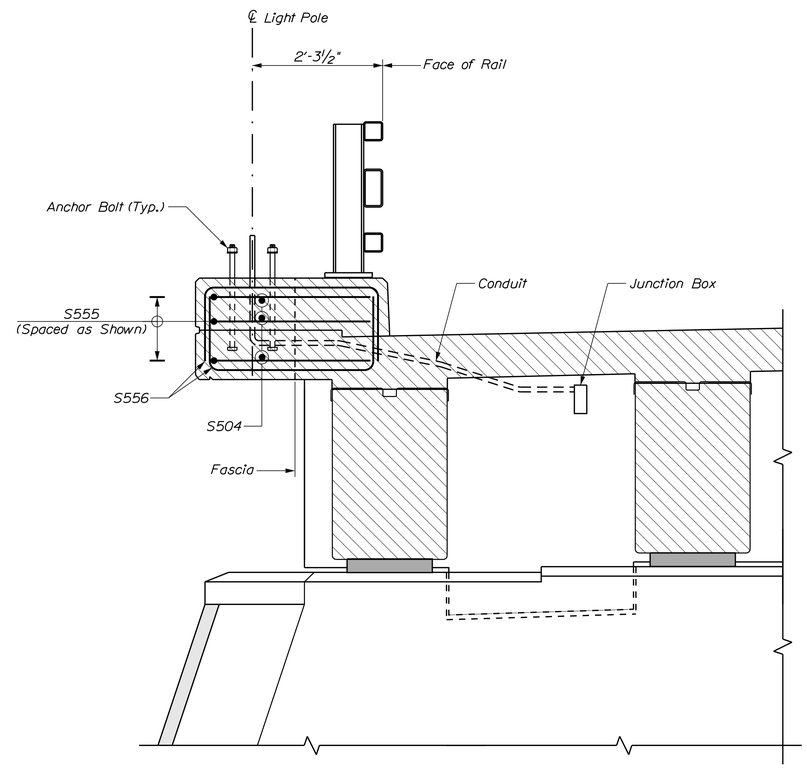

SECTION A-A
(Pole Base Not Shown)
(Adjust Reinforcement to Avoid Anchor Rods and Conduits)

Stantec

STATE OF MAINE
DEPARTMENT OF TRANSPORTATION

STP-1928(200)

WIN 19282.00

BRIDGE NO. 5661

BRIDGE PLANS

PROJ. MANAGER	NATE BENOIT	BY	DATE
DESIGN-DETAILED	DOT	JTS	SEPT 2014
CHECKED-REVIEWED	JRH	DOT/TWM	SEPT 2014
DESIGN2-DETAILED2			
DESIGN3-DETAILED3			
REVISIONS 1			
REVISIONS 2			
REVISIONS 3			
REVISIONS 4			
FIELD CHANGES			

SIGNATURE

P.E. NUMBER

DATE

BRIDGE STREET BRIDGE
PRESUMPSCOT RIVER
WESTBROOK CUMBERLAND COUNTY

SUPERSTRUCTURE REINF. 2

SHEET NUMBER
60
OF 74

Filename: ...\060_Superstructure_Reinf_2.dgn Division: BRIDGE Username: common Date:9/15/2014

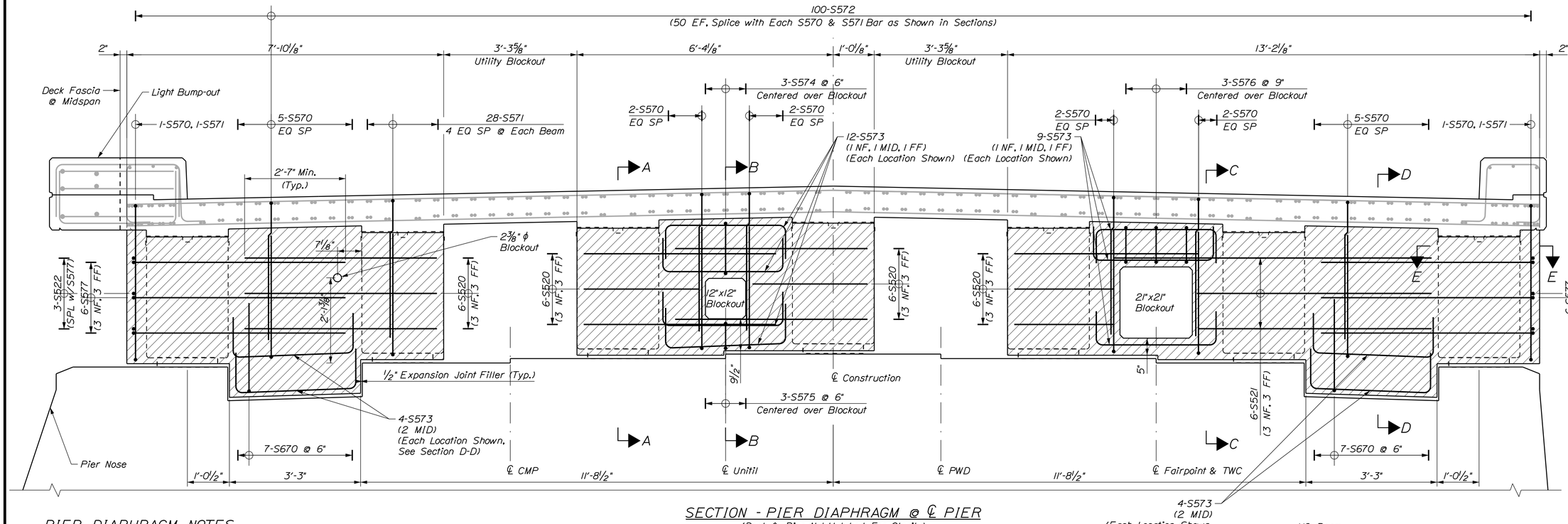

SECTION - PIER DIAPHRAGM @ ℄ PIER

(Deck & Pier Not Hatched For Clarity)

PIER DIAPHRAGM NOTES

1. Pier diaphragm concrete shall be paid for under Item No. 502.25 - Structural Concrete Superstructure Slab.

2. The 1/2" plain elastomeric pad between the top of the pier and bottom of the diaphragm shall be installed in conformance with Section 523 - Bearings. Plain Elastomeric Bearings (shear modulus 130-200 psi, 60 Durometer Hardness Shore A) and shall be installed as shown. Elastomeric pads will not be paid for directly, but will be considered incidental to Item No. 502.25.

3. Reinforcing steel shall have a minimum concrete cover of 2 inches unless otherwise noted.

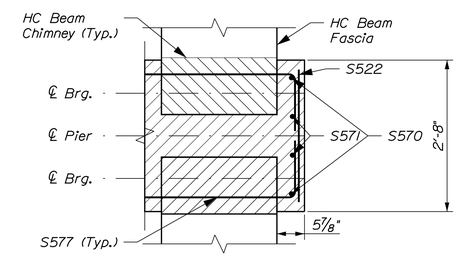

SECTION E-E

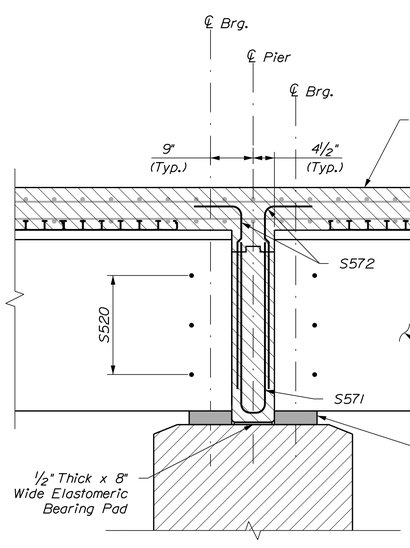

SECTION A-A

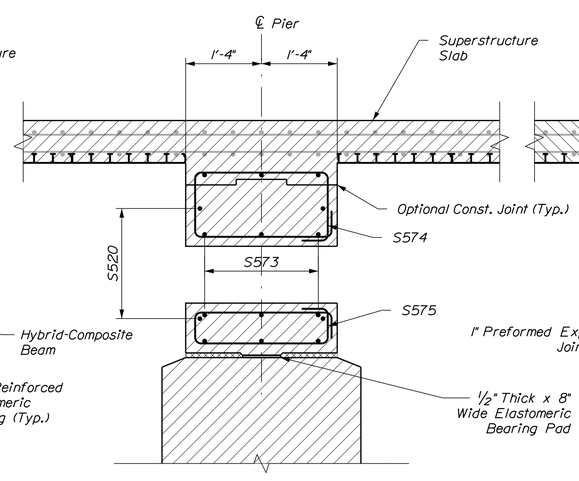

SECTION B-B

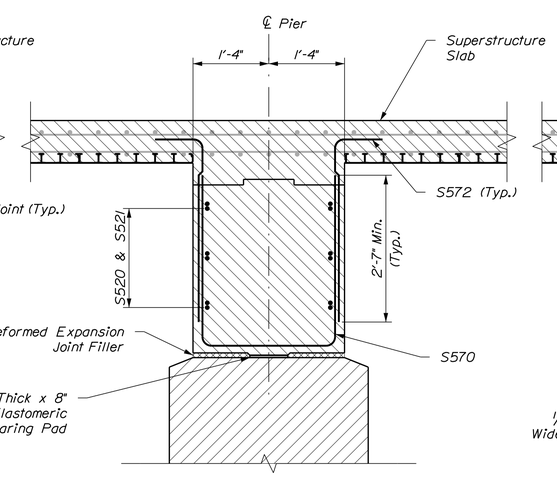

SECTION C-C

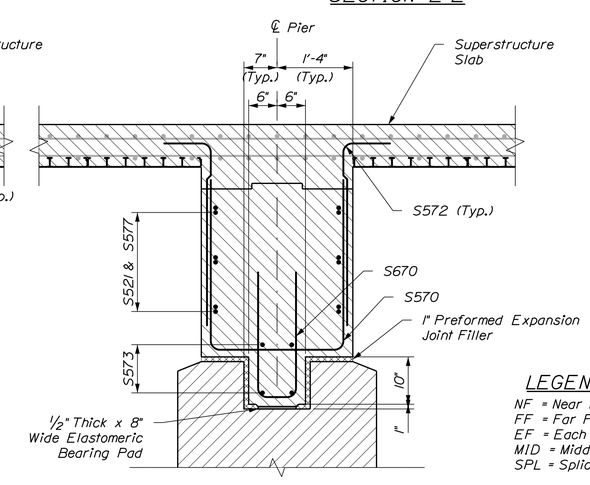

SECTION D-D

LEGEND

NF = Near Face
FF = Far Face
EF = Each Face
MID = Middle
SPL = Splice

Stantec

STATE OF MAINE
DEPARTMENT OF TRANSPORTATION

STP-1928(200)

WIN 19282.00

BRIDGE NO. 5661

BRIDGE PLANS

PROJ. MANAGER	NATE BENOIT	BY	DATE
DESIGN-DETAILED	DDT	DDT	SEPT 2014
CHECKED-REVIEWED	JRH	DDT/TWM	SEPT 2014
DESIGN2-DETAILED2			
DESIGN3-DETAILED3			
REVISIONS 1			
REVISIONS 2			
REVISIONS 3			
REVISIONS 4			
FIELD CHANGES			

SIGNATURE

P.E. NUMBER

DATE

BRIDGE STREET BRIDGE
PRESUMPSCOT RIVER
WESTBROOK CUMBERLAND COUNTY

PIER DIAPHRAGM

SHEET NUMBER

61

OF 74

Filename: ...\MSTA\061_Pier_Diaphragm.dgn Division: BRIDGE Username: common Date:9/15/2014

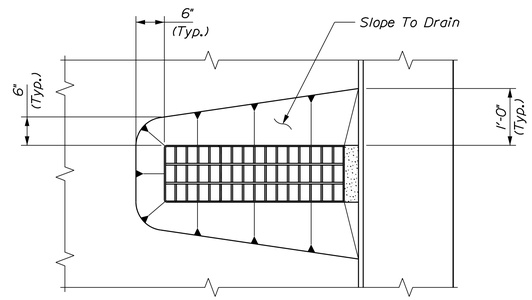

BRIDGE DRAIN PLAN

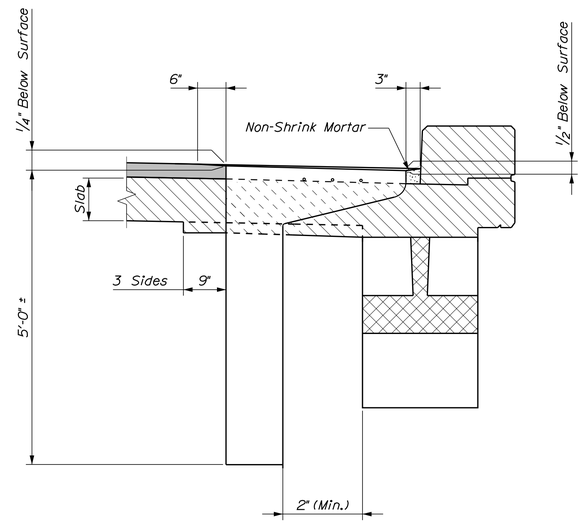

BRIDGE DRAIN ELEVATION

BRIDGE DRAIN NOTES

1. FRP Bridge Drains shall be designed and detailed based on the dimensions for the bridge drain details shown, and in accordance with Special Provisions Section 502, Fiber Reinforced Polymer Bridge Drains and Downspouts.

2. Shear connector bars extending from the beams may require adjustment to clear the bridge drains. No extra payment will be made for needed adjustments to the bars.

STATE OF MAINE
DEPARTMENT OF TRANSPORTATION

STP-1928(200)

WIN 19282.00

BRIDGE NO. 5661

BRIDGE PLANS

PROJ. MANAGER	NATE BENOIT	BY	DATE
DESIGN-DETAILED	MED	MED	SEPT 2014
CHECKED-REVIEWED	AML	DOT/TWM	SEPT 2014
DESIGN2-DETAILED2			
DESIGN3-DETAILED3			
REVISIONS 1			
REVISIONS 2			
REVISIONS 3			
REVISIONS 4			
FIELD CHANGES			

SIGNATURE

P.E. NUMBER

DATE

BRIDGE STREET BRIDGE
PRESUMPSCOT RIVER
WESTBROOK CUMBERLAND COUNTY

BRIDGE DRAINS

SHEET NUMBER
62
OF 74

Stantec

Filename: ...\MSTA\062_Bridge Drains.dgn Division: BRIDGE Username: common Date:10/2/2014

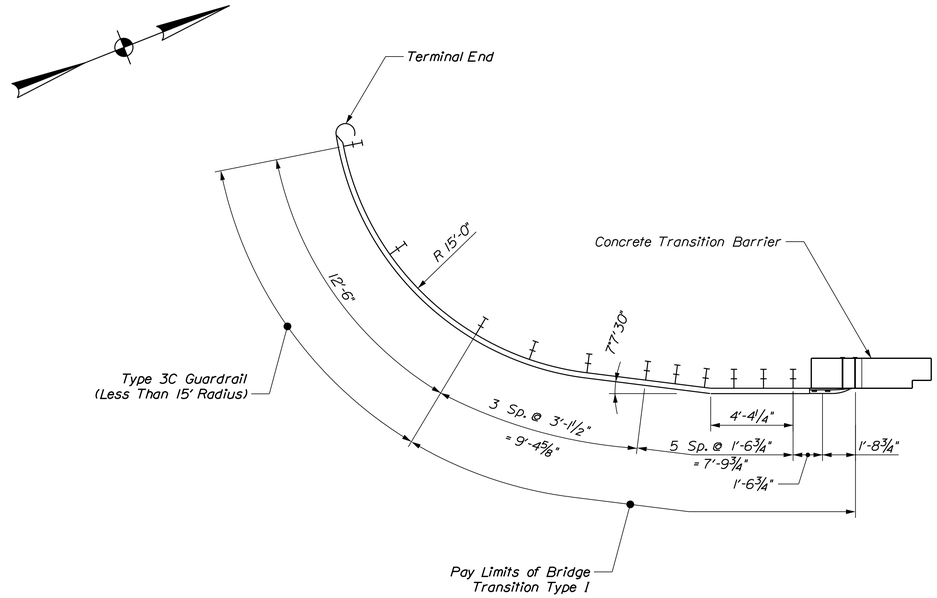

SOUTHWEST PLAN - RAIL TRANSITION

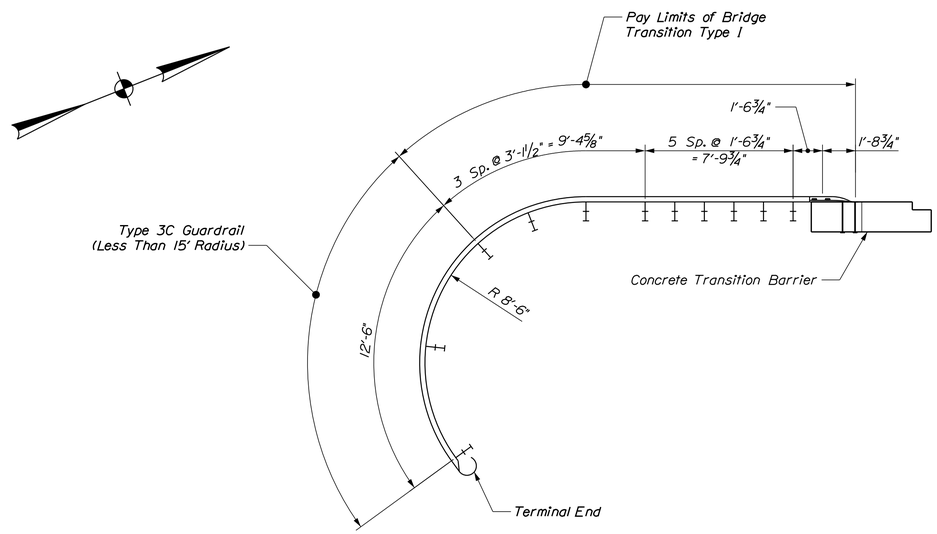

SOUTHEAST PLAN - RAIL TRANSITION

Stantec

STATE OF MAINE
DEPARTMENT OF TRANSPORTATION

STP-1928(200)

WIN 19282.00

BRIDGE NO. 5661

BRIDGE PLANS

PROJ. MANAGER	NATE BENOIT	BY	DATE
DESIGN-DETAILED	TPL	JTS	SEPT 2014
CHECKED-REVIEWED	DOT	DOT/TWM	SEPT 2014
DESIGN2-DETAILED2			
DESIGN3-DETAILED3			
REVISIONS 1			
REVISIONS 2			
REVISIONS 3			
REVISIONS 4			
FIELD CHANGES			

SIGNATURE

P.E. NUMBER

DATE

BRIDGE STREET BRIDGE
PRESUMPSCOT RIVER
WESTBROOK CUMBERLAND COUNTY

APPROACH RAIL DETAILS

SHEET NUMBER

63

OF 74

Filename: ...\MSTA\063_Rail_Approach.dgn Division: BRIDGE Username: common Date:9/15/2014

STRAIGHT BARS

MARK	QTY.	LENGTH	LOCATION	MARK	QTY.	LENGTH	LOCATION
			Abutment No. 1				**Abutment No. 2**
A500	74	12'-6"	Transverse - Footing (Bottom)	B500	74	12'-6"	Transverse - Footing (Bottom)
A501	30	36'-0"	Longitudinal - Footing (Top & Bot.)	B501	30	43'-11"	Longitudinal - Footing (Top & Bot.)
A502	60	18'-5"	Longitudinal - Footing (Top & Bot.)	B502	30	27'-1"	Longitudinal - Footing (Top & Bot.)
A503	52	12'-2"	Horizontal - Wingwall (EF)	B503	26	30'-2"	Horizontal - Wingwall (EF)
A504	4	10'-10"	Horizontal - Wingwall (EF)	B504	2	26'-8"	Horizontal - Wingwall (EF)
A505	4	9'-0"	Horizontal - Wingwall (EF)	B505	2	22'-3"	Horizontal - Wingwall (EF)
A506	4	7'-2"	Horizontal - Wingwall (EF)	B506	2	17'-10"	Horizontal - Wingwall (EF)
A507	4	5'-4"	Horizontal - Wingwall (EF)	B507	2	13'-5"	Horizontal - Wingwall (EF)
A508	4	3'-6"	Horizontal - Wingwall (EF)	B508	2	9'-0"	Horizontal - Wingwall (EF)
A509	4	1'-9"	Horizontal - Wingwall (EF)	B509	2	4'-7"	Horizontal - Wingwall (EF)
A510	10	16'-0"	Vertical - Wingwall (NF)	B510	16	16'-0"	Vertical - Wingwall (NF)
A511	8	13'-3"	Vertical - Wingwall (NF)	B511	10	13'-8"	Vertical - Wingwall (NF)
A512	8	11'-0"	Vertical - Wingwall (NF)	B512	10	11'-4"	Vertical - Wingwall (NF)
A513	26	11'-9"	Vertical - Wingwall (FF)	B513	36	11'-9"	Vertical - Wingwal (FF)
A514	4	14'-0"	Horizontal - Wingwall (Top, EF)	B514	2	30'-11"	Horizontal - Wingwall (Top EF)
				B515	30	8'-0"	Horizontal - Wingwall (EF)
				B516	10	4'-6"	Horizontal - Wingwall (EF)
A520	12	6'-9"	Vertical - Backwall	B520	6	6'-9"	Vertical - Backwall
A600	30	17'-5"	Horizontal - Breastwall (NF)	B600	30	18'-6"	Horizontal - Breastwall (NF)
A601	50	19'-11"	Horizontal - Breastwall (FF)	B601	25	19'-9"	Horizontal - Breastwall (FF)
A602	36	11'-3"	Vertical - Breastwall (NF)	B602	25	19'-0"	Horizontal - Breastwall (FF)
				B603	41	11'-3"	Vertical - Breastwall (NF)
				B604	12	11'-0"	Vertical - Wingwall Alt. Bar (FF)
A700	113	12'-6"	Transverse - Footing (Top)	B700	114	12'-6"	Transverse - Footing (Top)
A701	40	10'-6"	Vertical - Breastwall (FF)	B701	39	10'-6"	Vertical - Breastwall (FF)
A800	46	12'-6"	Transverse - Footing (Top)	B800	33	12'-6"	Transverse - Footing (Top)
A900	44	7'-0"	Rock Dowel - Seal Footing	B900	41	7'-0"	Rock Dowel - Seal Footing
			Pier				
P500	49	9'-6"	Transverse - Pier Footing (Top)				
P501	26	44'-6"	Longitudinal - Pier Footing (Top & Bot.)				
P600	64	19'-3"	Longitudinal - Pier (EF)				
P601	2	22'-10"	Longitudinal - Pier (Top)				
P700	89	9'-6"	Transverse - Pier Footing (Bot.)				
P701	160	15'-4"	Vertical - Pier (EF)				
P702	6	12'-6"	Vertical - Pier (EF)				
P703	12	8'-3"	Vertical - Pier (EF)				
P900	54	3'-6"	Rock Dowel - Seal Footing				

BENT BARS

MARK	QTY.	LENGTH	TYPE	A	B	C	D	E	F	G	H	O	R	LOCATION
								Abutment No. 1						
A450	32	4'-10"	U		1'-10"	1'-2"	1'-10"							Backwall & Wingwall (Top)
A550	46	7'-6"	U		2'-6"	2'-6"	2'-6"							Vertical - Footing (Toe)
A551	26	8'-7"	L	7'-9"	10"									Vertical - Wingwall (NF)
A552	36	5'-10"	U		10"	4'-2"	10"							Horizontal - Beam Seat
A553	36	6'-8"	U		1'-6"	1'-2"	4'-0"							Vertical - Backwall (NF)
A554	40	6'-0"	L	4'-6"	1'-6"									Vertical - Backwall (FF)
A555	6	7'-9"	U		2'-8"	2'-5"	2'-8"							Keeper Block
A556	8	9'-6"	U		2'-8"	4'-2"	2'-8"							Keeper Block
A557	12	6'-9"	SJ		1'-1"	2'-3"	1'-2"	2'-3"						Horizontal - Abutment Corner
A558	4	4'-8"	W				1'-6"	1'-8"	1'-6"					Utility Blockout
A559	4	5'-0"	W				1'-6"	2'-0"	1'-6"					Utility Blockout
A560	4	6'-6"	U		2'-2"	2'-2"	2'-2"							Utility Blockout
A561	4	3'-6"	U		1'-2"	1'-2"	1'-2"							Utility Blockout
A562	30	11'-6"	U		4'-6"	2'-6"	4'-6"							Vertical - Footing (Corner Toe)
A650	44	9'-9"	L	8'-9"	1'-0"									Vertical - Breastwall (NF)
A651	30	9'-0"	V				4'-6"	4'-6"			3'-3"			Horizontal - Corner (NF)
A750	128	10'-11"	L	9'-9"	1'-2"									Vertical - Breastwall/Wingwall (FF)
A751	26	6'-7"	L	5'-5"	1'-2"									Vertical - Wingwall (FF)
								Abutment No. 2						
B450	41	4'-10"	U		1'-10"	1'-2"	1'-10"							Backwall & Wingwall (Top)
B550	43	7'-6"	U		2'-6"	2'-6"	2'-6"							Vertical - Footing (Toe)
B551	36	8'-7"	L	7'-9"	10"									Vertical - Wingwall (NF)
B552	37	5'-10"	U		10"	4'-2"	10"							Horizontal - Beam Seat
B553	37	6'-8"	U		1'-6"	1'-2"	4'-0"							Vertical - Backwall (NF)
B554	39	6'-0"	L	4'-6"	1'-6"									Vertical - Backwall (FF)
B555	6	7'-9"	U		2'-8"	2'-5"	2'-8"							Keeper Block
B556	8	9'-6"	U		2'-8"	4'-2"	2'-8"							Keeper Block
B557	4	4'-8"	W				1'-6"	1'-8"	1'-6"					Utility Blockout
B558	4	5'-0"	W				1'-6"	2'-0"	1'-6"					Utility Blockout
B559	4	3'-6"	U		1'-2"	1'-2"	1'-2"							Utility Blockout
B560	4	6'-6"	U		2'-2"	2'-2"	2'-2"							Utility Blockout
B561	6	6'-4"	16	2'-0"	1'-2"	2'-0"	1'-2"				1'-1"	6"		Horizontal - Corner
B563	31	11'-6"	U		4'-6"	2'-6"	4'-6"							Vertical - Footing (Corner Toe)
B650	45	9'-9"	L	8'-9"	1'-0"									Vertical - Breastwall (NF)
B653	44	5'-0"	V				2'-6"	2'-6"			1'-9"			Horizontal - Corner (FF)
B654	15	7'-0"	V				3'-0"	4'-0"						Horizontal - Corner (NF)
B750	130	10'-11"	L	9'-9"	1'-2"									Vertical - Breastwall/Wingwall (FF)
B751	30	6'-8"	L	5'-6"	1'-2"									Vertical - Wingwall (FF)
B752	15	13'-8"	U		7'-0"	1'-8"	5'-0"							Vertical - Wingwall
								Pier						
P450	176	3'-9"	P3	4 1/2"	3'-0"	4 1/2"								Pier - Tie
P550	112	7'-6"	U		2'-6"	2'-6"	2'-6"							Pier Footing/Seal
P650	29	7'-10"	U		2'-5"	3'-0"	2'-5"							Pier - Top
P651	32	5'-6"	U		2'-5"	8"	2'-5"							Pier - Top (Pier Diaphragm key)
P652	16	12'-1"	PA	5'-0"	2'-1"	5'-0"					1'-6"	3'-0"		Pier - Nose
P653	16	13'-0"	U		5'-0"	3'-0"	5'-0"							Pier - Downstream Edge
P654	4	6'-10"	U		2'-5"	2'-0"	2'-5"							Pier - Nose (Top)
P655	4	5'-6"	U		10"	3'-10"	10"							Pier - Downstream Edge (Top)
P750	178	7'-2"	L	6'-0"	1'-2"									Vertical - Pier Footing/Seal

TYPE - BENDING DIAGRAMS

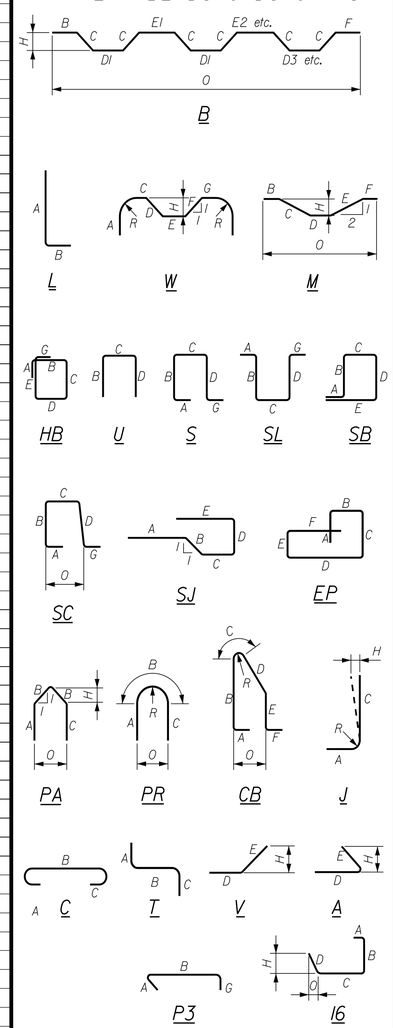

All dimensions are out-to-out of bar.

Bending details and hooks shall conform to the recommendations of the current revision of ACI Standard 318.

Reinforcing Bar: ASTM A615/A615M, Grade 420

GENERAL NOTES

1. The first two digits following the letter(s) of the mark indicate the size of the bar:

   Mark "A1602" = bar size #16
   Mark "P2501" = bar size #25
   Mark "S1950" = bar size #19

2. Each crank bar, Type B, may be replaced by two (2) straight bars (one top and one bottom) of the same bar size as the crank bar. Payment in either case shall be based on crank bars as schedule on the plans.

Stantec

STATE OF MAINE
DEPARTMENT OF TRANSPORTATION

STP-1928(200)

WIN 19282.00

BRIDGE NO. 5661

BRIDGE PLANS

PROJ. MANAGER		BY	DATE
DESIGN-DETAILED	JTS	JTS	SEPT 2014
CHECKED-REVIEWED	DDT	JTS/DDT	SEPT 2014
DESIGN2-DETAILED2			
DESIGN3-DETAILED3			
REVISIONS 1			
REVISIONS 2			
REVISIONS 3			
REVISIONS 4			
FIELD CHANGES			

SIGNATURE

P.E. NUMBER

DATE

BRIDGE STREET BRIDGE
PRESUMPSCOT RIVER
WESTBROOK CUMBERLAND COUNTY

REINFORCEMENT SCHEDULE 1

SHEET NUMBER

64

OF 74

Filename: ...\MSTA\064_Reinf_Sched_1.dgn Division: BRIDGE Username: common Date:9/15/2014

STRAIGHT BARS

MARK	QTY.	LENGTH	LOCATION	MARK	QTY.	LENGTH	LOCATION
			Superstructure				
*S500	512	35'-0"	Transverse - Top & Bottom				
*S501	336	29'-11"	Longitudinal - Top & Bottom				
*S502	30	35'-2"	Curb				
*S504	3	4'-0"	Light Bump-out				
*S520	24	4'-9"	Pier Diaphragm				
*S521	6	7'-10"	Pier Diaphragm				
*S522	6	2'-4"	Pier Diaphragm				
*S600	304	50'-0"	Longitudinal - Over Pier				
			Approach Slab				
AS500	54	30'-6"	Transverse - Top & Bottom				
AS501	42	14'-6"	Longitudinal - Top				
AS700	106	14'-6"	Longitudinal - Bottom				

BENT BARS

MARK	QTY.	LENGTH	TYPE	A	B	C	D	E	F	G	H	O	R	LOCATION
							Superstructure							
*S550	464	5'-9"	SC	10"	1'-5"	1'-2"	1'-6"			10"		1'-4 1/4"		Curb
*S551	52	6'-11"	SJ	10"	1'-4"	3'-0"	11"	10"						End Haunch
*S552	64	8'-0"	L	4'-0"	4'-0"									Drains
*S555	3	8'-9 1/2"	W				3'-6"	1'-9 1/2"	3'-6"		2'-6"			Light Bump-out
*S556	8	5'-11"	U		1'-5"	3'-1"	1'-5"							Light Bump-out
*S557	4	5'-7"	U		1'-5"	2'-9"	1'-5"							Light Bump-out
*S558	4	5'-1"	U		1'-5"	2'-3"	1'-5"							Light Bump-out
*S570	20	8'-4"	U		3'-0"	2'-4"	3'-0"							Pier Dia. - Between Beams
*S571	30	6'-5"	U		3'-0"	5"	3'-0"							Pier Dia. - Between Beams
*S572	100	4'-2"	L		10"	3'-4"								Pier Dia. - Between Beams
*S573	29	4'-7"	U		10"	2'-11"	10"							Pier Diaphragm
*S574	3	8'-0"	HB	6"	2'-4"	1'-2"	2'-4"	1'-2"		6"				Pier Dia. - Utility Bay
*S575	3	6'-7"	HB	6"	2'-4"	5 1/2"	2'-4"	5 1/2"		6"				Pier Dia. - Utility Bay
*S576	3	7'-2"	HB	6"	2'-4"	9"	2'-4"	9"		6"				Pier Dia. - Utility Bay
*S577	12	6'-5"	L	5'-5"	1'-0"									Pier Dia. - Fascia Beam
*S670	14	5'-0"	U		2'-2"	8"	2'-2"							Pier Dia. - Shear Key
							Approach Slab							
AS550	42	4'-2"	V				3'-2"	1'-0"			8 1/2"			Approach Slab Seat

MARK | QTY. | LENGTH | LOCATION | MARK | QTY. | LENGTH | LOCATION | MARK | QTY. | LENGTH | TYPE | A | B | C | D | E | F | G | H | O | R | LOCATION

TYPE - BENDING DIAGRAMS

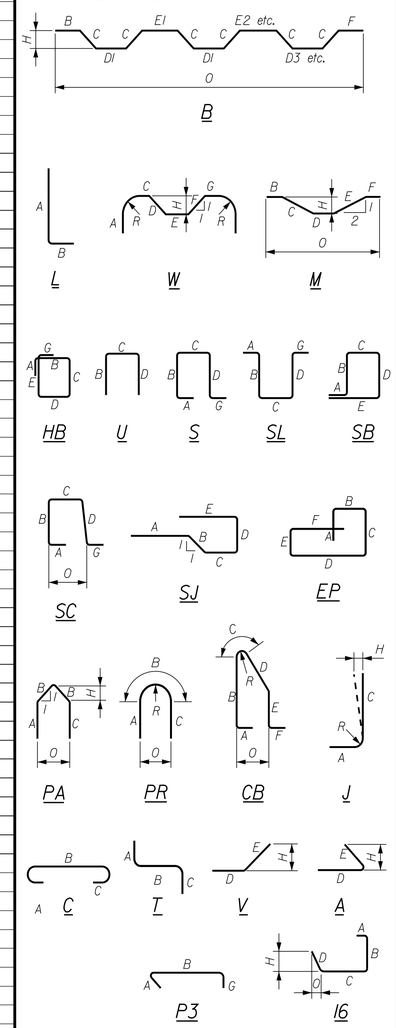

All dimensions are out-to-out of bar.

Bending details and hooks shall conform to the recommendations of the current revision of ACI Standard 318.

Reinforcing Bar: ASTM A615/A615M, Grade 420

GENERAL NOTES

1. The first two digits following the letter(s) of the mark indicate the size ofthe bar:

   Mark "A1602" = bar size #16
   Mark "P2501" = bar size #25
   Mark "S1950" = bar size #19

2. Each crank bar, Type B, may be replaced by two (2) straight bars (one top and one bottom) of the same bar size as the crank bar. Payment in either case shall be based on crank bars as schedule on the plans.

3. Bars marked (•) are part of the corrosion resistant reinforcing system, see Special Provision section 503.

Stantec

STATE OF MAINE
DEPARTMENT OF TRANSPORTATION

STP-1928(200)

WIN 19282.00

BRIDGE PLANS

BRIDGE NO. 5661

PROJ. MANAGER	NATE BENOIT	BY	DATE
DESIGN-DETAILED	JTS	JTS	SEPT 2014
CHECKED-REVIEWED	DDT	JTS/DDT	SEPT 2014
DESIGN2-DETAILED2			
DESIGN3-DETAILED3			
REVISIONS 1			
REVISIONS 2			
REVISIONS 3			
REVISIONS 4			
FIELD CHANGES			

SIGNATURE

P.E. NUMBER

DATE

BRIDGE STREET BRIDGE
PRESUMPSCOT RIVER
WESTBROOK CUMBERLAND COUNTY

REINFORCEMENT SCHEDULE 2

SHEET NUMBER

65

OF 74

Filename: ...\MSTA\065_Reinf_Sched_2.dgn Division: BRIDGE Username: common Date:10/1/2014

DESIGN REQUIREMENTS

1. The Prefabricated Bridge shall be designed in accordance with the AASHTO LRFD Bridge Design Specifications, Sixth Edition 2012, and the AASHTO LRFD Guide Specification for Pedestrian Bridges.

2. The Prefabricated Bridge shall be designed to carry a pedestrian loading of 90 psf combined with a single vehicle load of 10,000 lb.. No reduction in the pedestrian live load intensity shall be taken.

3. The Construction, handling, and assembly of the prefabricated Bridge shall be in accordance with Special Provision Sections 104 and 504, and with the manufacturer's specification, as applicable.

DESIGN LOADING

Live Load ..... 90 p.s.f. (pedestrian)
10,000 lb. (single vehicle loading)

GENERAL NOTES

1. Wood handrail on riverwalk railing shall be continuous over prefabricated bridge, with a maximum gap in handrail from adjacent railing panels of 1/4" (as measured at the time of construction).

2. Lights shall be located at the railing posts nearest to the third-points of the bridge span. Four (4) total lights shall be installed on the bridge, two (2) per truss, in accordance with the details on the referenced plans.

3. Post layout for riverwalk railing shall be symmetric about midspan of the prefabricated bridge.

4. The prefabricated bridge and riverwalk railing shall be galvanized and painted in accordance with the project specifications. The finish color shall be Federal Standard 34062 or RAL6005 (with the design intent of matching the green finish on the existing riverwalk railing).

5. Dimensions denoted with this symbol (*) are approximate and are subject to change based on the final geometry of the multi-use bridge.

HYDROLOGIC DATA

Drainage Area ..... 577 sq mi
Design Discharge (Q50) ..... 15,700 cfs
Check Discharge (Q100) ..... 18,900 cfs
Headwater Elevation (Q50) ..... 52.5 ft
Headwater Elevation (Q100) ..... 54.2 ft
Discharge Velocity (Q50) ..... 13.6 fps
Discharge Velocity (Q100) ..... 15.3 fps

MATERIALS

Concrete: (Unless noted otherwise) ..... Class "A"
Reinforcing Steel: ..... ASTM A615/A615M, Grade 60
Structural Steel: ..... ASTM A709/A709M (galvanized and painted)

BASIC DESIGN STRESSES

Concrete: ..... f 'c = 4,350 psi
Reinforcing Steel: ..... 60,000 psi
Structural Steel: ..... 50,000 psi

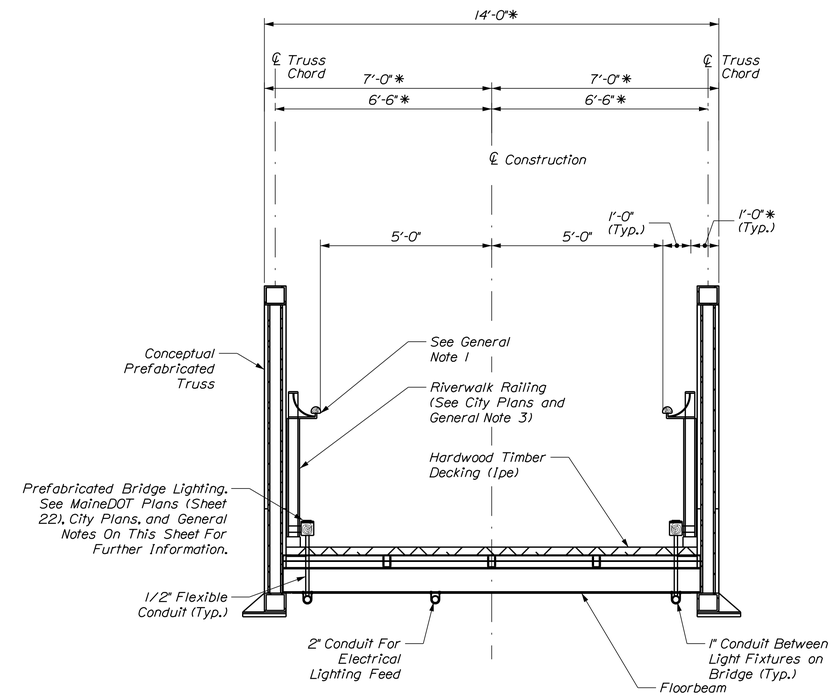

SECTION - MULTI-USE BRIDGE

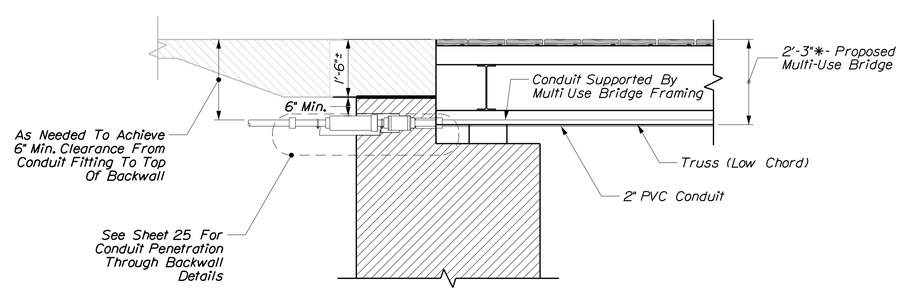

BACKWALL CONDUIT PENETRATION DETAIL - MULTI-USE BRIDGE ABUTMENT

Stantec

STATE OF MAINE
DEPARTMENT OF TRANSPORTATION

STP-1928(200)

WIN 19282.00

BRIDGE NO. 5661

BRIDGE PLANS

PROJ. MANAGER	NATE BENOIT		
DESIGN-DETAILED	AML	BY	DATE
CHECKED-REVIEWED	DOT	TJA	SEPT 2014
DESIGN2-DETAILED2		AML/TWM	SEPT 2014
DESIGN3-DETAILED3			
REVISIONS 1			
REVISIONS 2			
REVISIONS 3			
REVISIONS 4			
FIELD CHANGES			

SIGNATURE

P.E. NUMBER

DATE

BRIDGE STREET BRIDGE
PRESUMPSCOT RIVER
WESTBROOK CUMBERLAND COUNTY

MULTI-USE BRIDGE

SHEET NUMBER

66

OF 74

Filename: ...\MSTA\066_MultiUseBridge.dgn Division: BRIDGE Username: common Date:9/15/2014

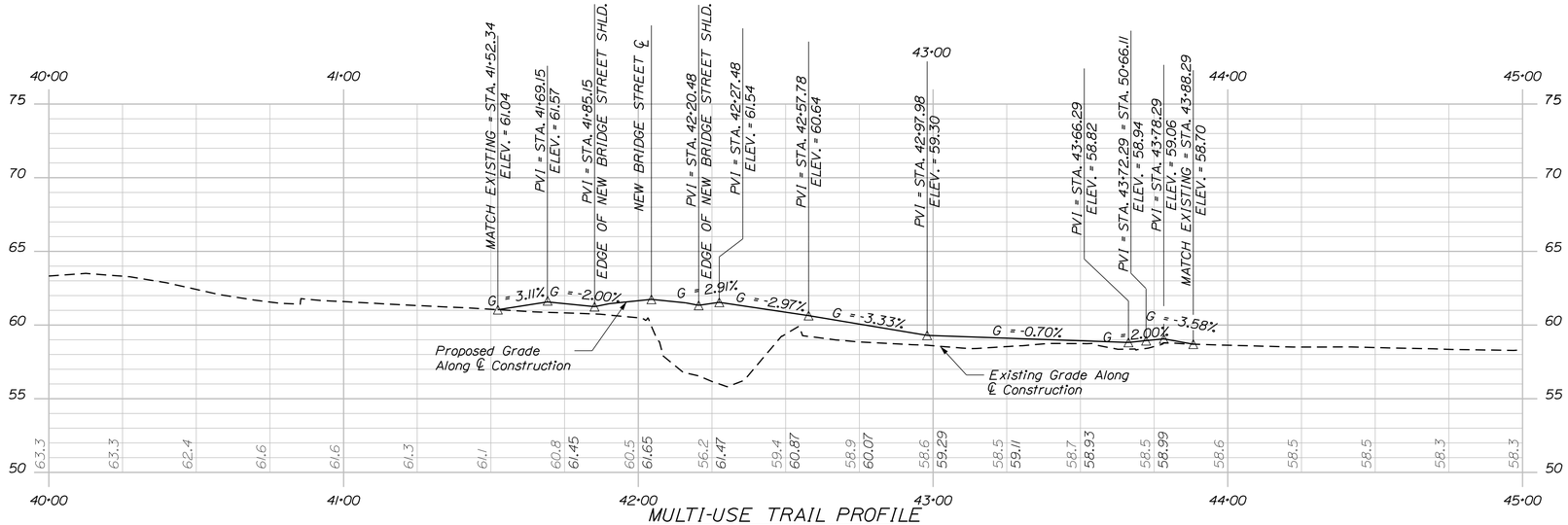

MULTI-USE TRAIL PROFILE
EAST-WEST SECTION

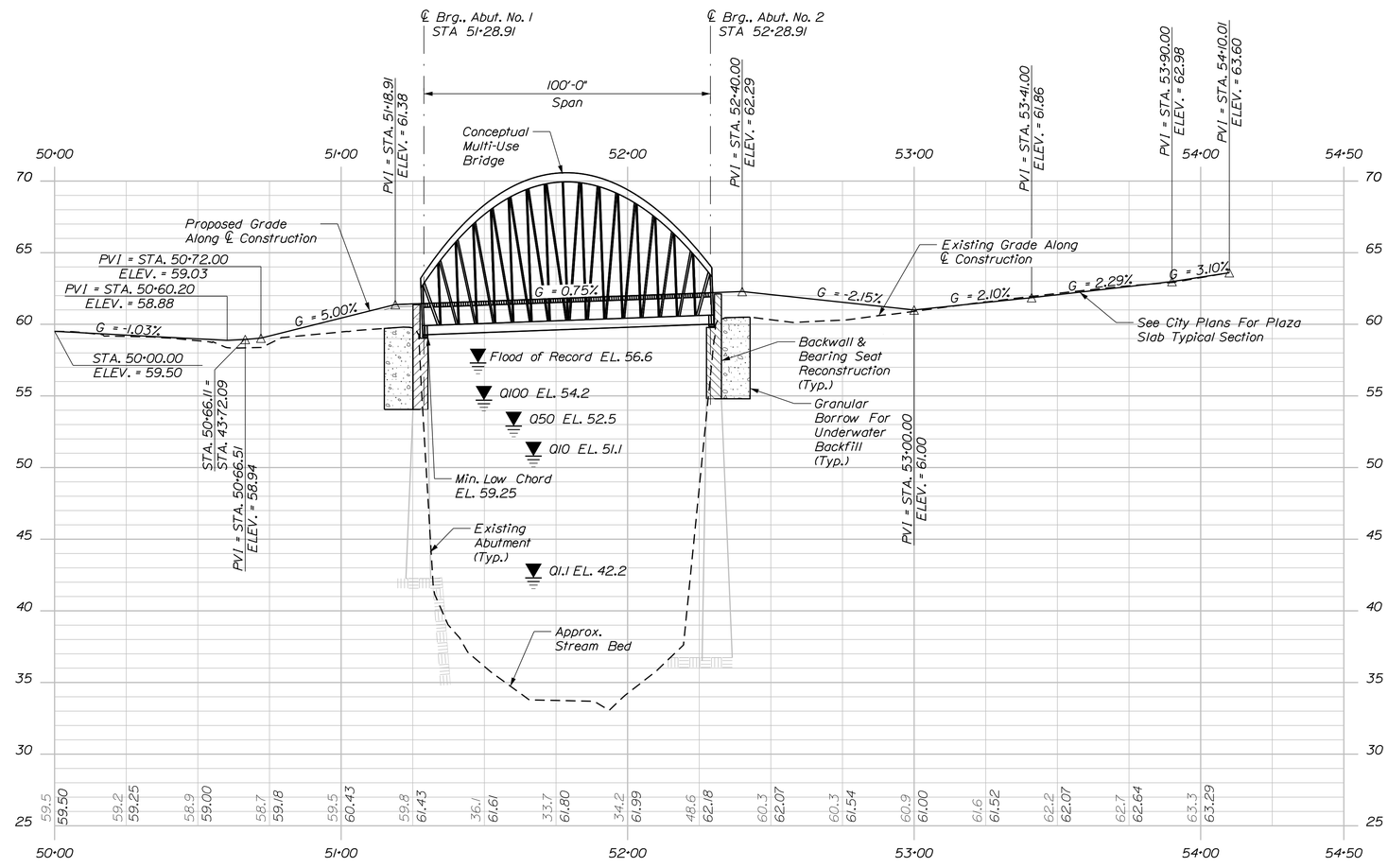

MULTI-USE TRAIL PROFILE
NORTH-SOUTH SECTION

PROFILE

Horiz. 25 0 25 50

Vert. 5 0 5 10

STATE OF MAINE
DEPARTMENT OF TRANSPORTATION

STP-1928(200)

WIN 19282.00

BRIDGE NO. 5661

BRIDGE PLANS

PROJ. MANAGER	NATE BENOIT		
DESIGN-DETAILED	AML	T.J.A.	SEPT 2014
CHECKED-REVIEWED	DDT	AML/TWM	SEPT 2014
DESIGN2-DETAILED2	TPL	ISM	SEPT 2014
DESIGN3-DETAILED3			
REVISIONS 1			
REVISIONS 2			
REVISIONS 3			
REVISIONS 4			
FIELD CHANGES			

SIGNATURE

P.E. NUMBER

DATE

BRIDGE STREET BRIDGE
PRESUMPSCOT RIVER
WESTBROOK CUMBERLAND COUNTY

MULTI-USE TRAIL
PROFILE

Stantec

SHEET NUMBER

67

OF 74

Filename: ...\MSTA\067_TrailProfile.dgn Division: BRIDGE Username: common Date:9/15/2014

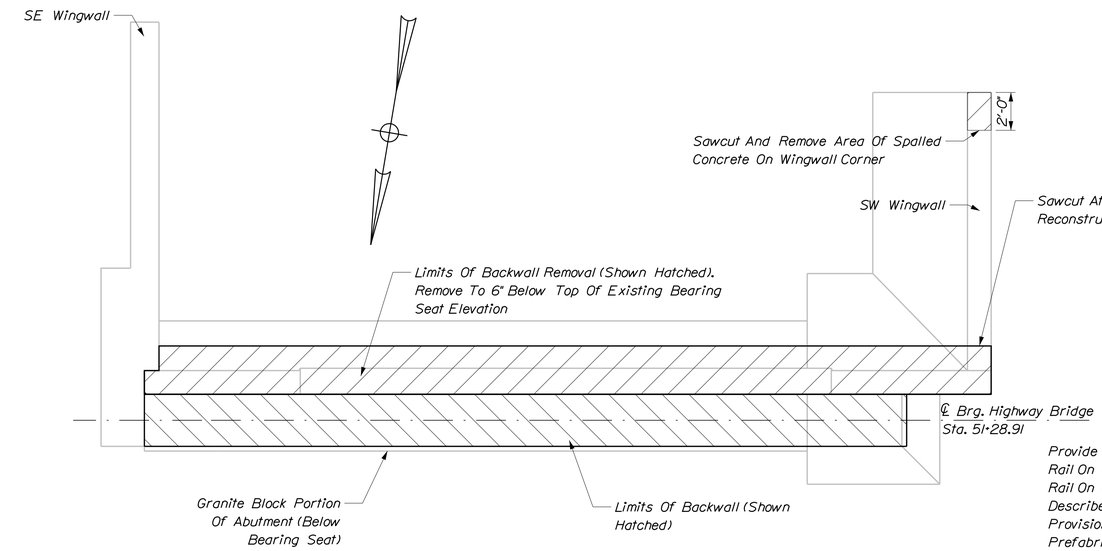

PLAN - EXISTING ABUTMENT NO. 1 REMOVAL

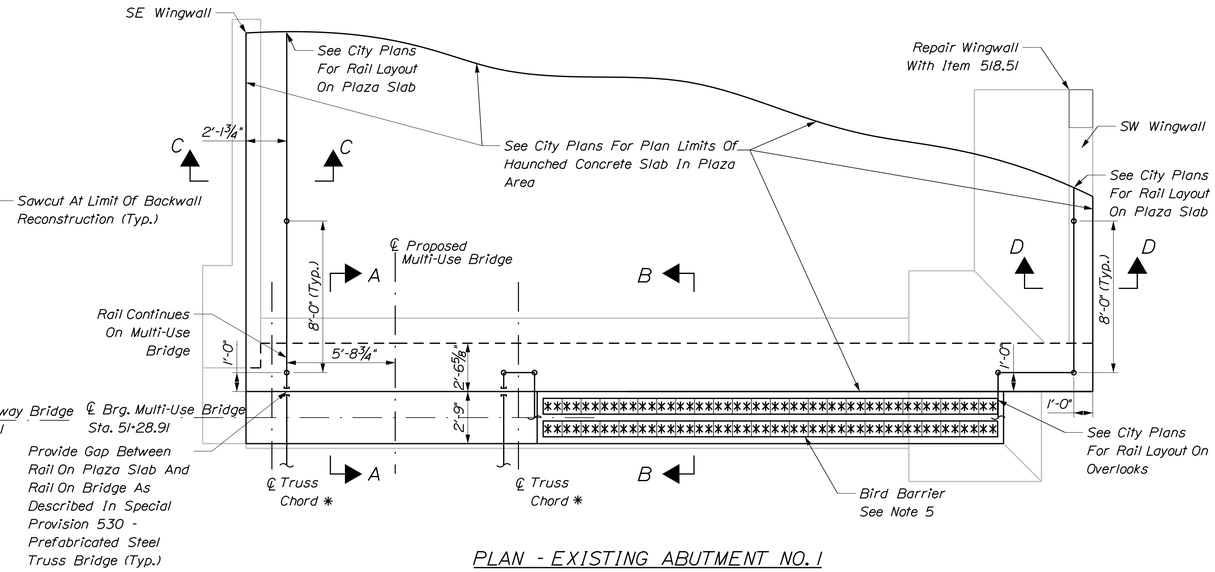

PLAN - EXISTING ABUTMENT NO. 1 RECONSTRUCTION

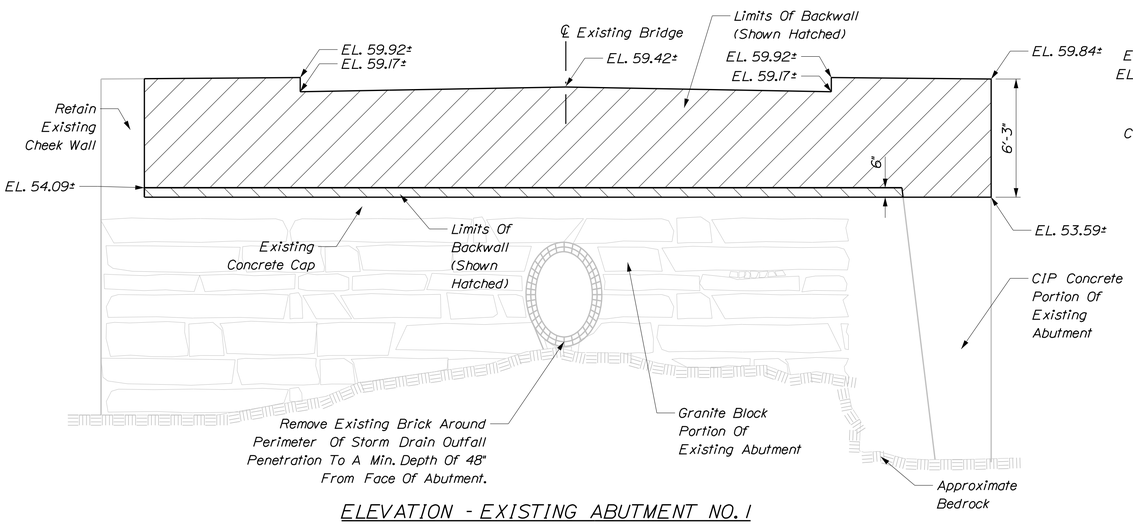

ELEVATION - EXISTING ABUTMENT NO. 1 REMOVAL

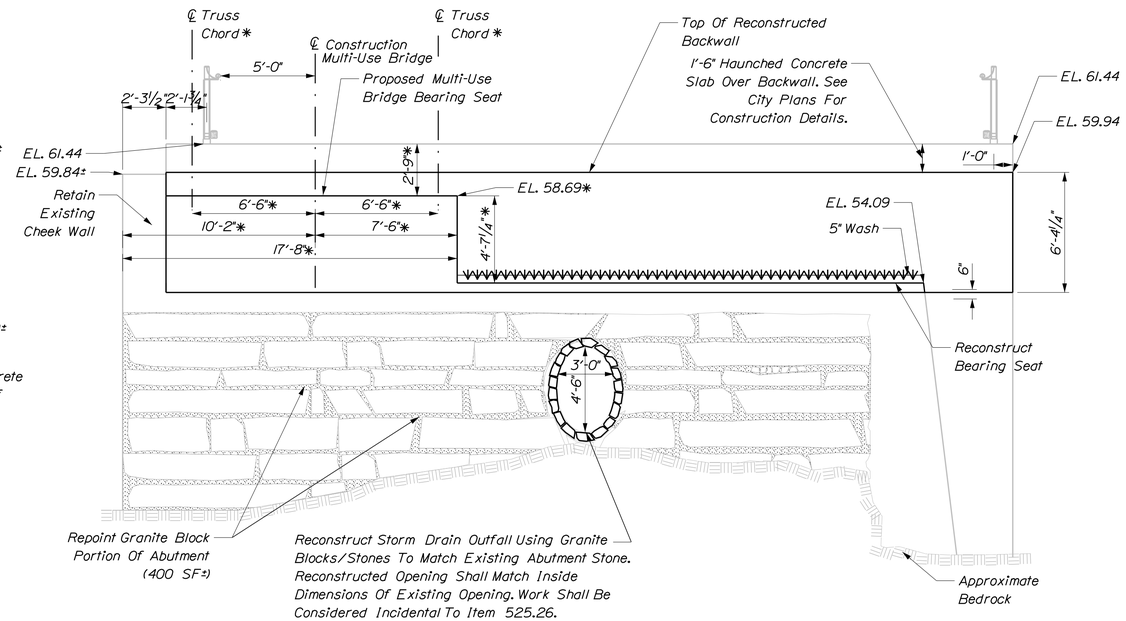

ELEVATION - EXISTING ABUTMENT NO. 1 RECONSTRUCTION

NOTES:

1. Dimensions denoted with this symbol (✱) are approximate and are subject to change based on final geometry of the multi-use bridge. Final dimensions shall be submitted to the Department by the Contractor during the shop drawing review process and shall be approved prior to commencement of concrete construction. Contractor shall confirm existing abutment elevations and dimensions prior to preparing bridge shop drawings.

2. Areas of concrete repairs noted on plans are approximate and do not necessarily represent all areas requiring repair. All abutment and wingwall concrete shall be evaluated by the resident engineer and repaired as necessary. payment for concrete repair work will be made under item 518.51, repair of upward faces surf-below REINFORCING steel, item 518.6, repair of vertical surfaces < 7.9 in., item 518.61, repair of vertical surfaces > 7.9 in. and item 518.8, crack repair.

3. Remove existing bridge approach rail and existing timber guardrail as needed to construct proposed improvements.

4. For Sections A-A, B-B, C-C, and D-D see sheet 71.

5. Install Bird Barrier in accordance with Special Provision 607 - Bird Barrier. Coordinate installation with construction of River Overlooks (part of City Project) to avoid conflicts between overlook framing and Bird Barrier. Number of rows of Bird Barrier required to protect abutment may vary depending on selected product/manufacturer.

Stantec

STATE OF MAINE
DEPARTMENT OF TRANSPORTATION

STP-1928(200)

WIN 19282.00

BRIDGE NO. 5661

BRIDGE PLANS

PROJ. MANAGER	NATE BENOIT	BY	DATE
DESIGN-DETAILED	AML	TJA	SEPT 2014
CHECKED-REVIEWED	DOT	AML/TWM	SEPT 2014
DESIGN2-DETAILED2			
DESIGN3-DETAILED3			
REVISIONS 1			
REVISIONS 2			
REVISIONS 3			
REVISIONS 4			
FIELD CHANGES			

SIGNATURE

P.E. NUMBER

DATE

BRIDGE STREET BRIDGE
PRESUMPSCOT RIVER
WESTBROOK CUMBERLAND COUNTY

EXIST. ABUTMENT NO. 1
MODIFICATIONS AND REPAIRS

SHEET NUMBER

68

OF 74

Filename: ...\MSTA\068_S_Exist_Abut_1.dgn Division: BRIDGE Username: common Date:9/15/2014

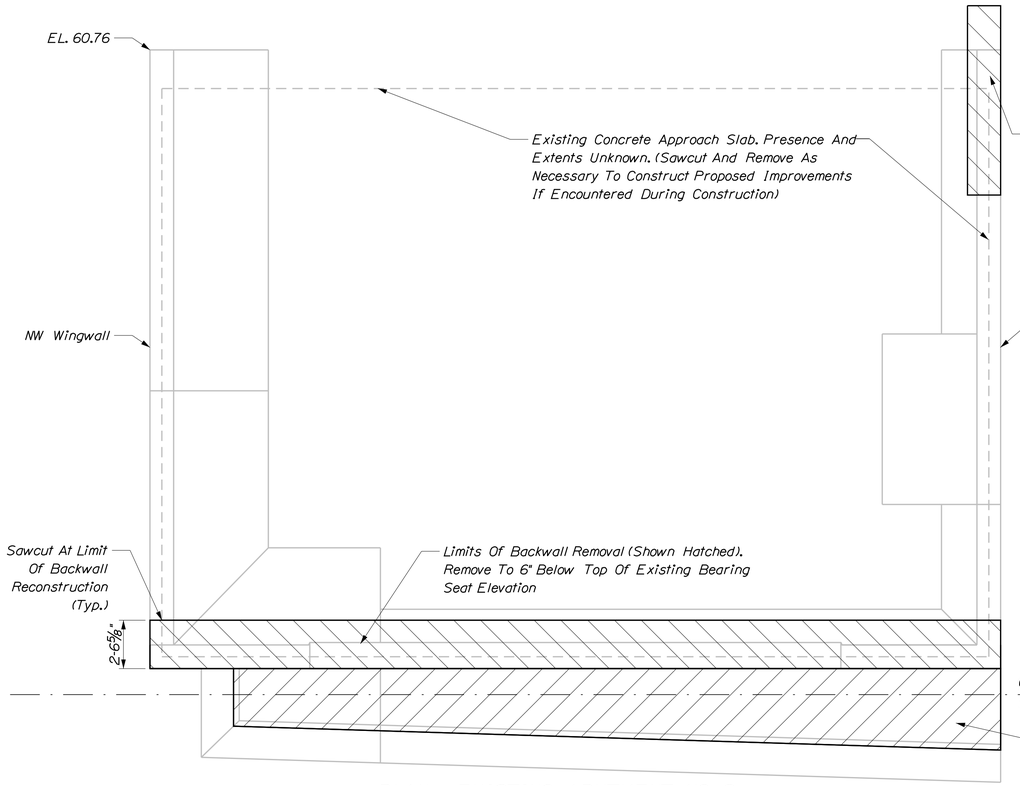

PLAN - EXISTING ABUTMENT NO. 2
REMOVAL

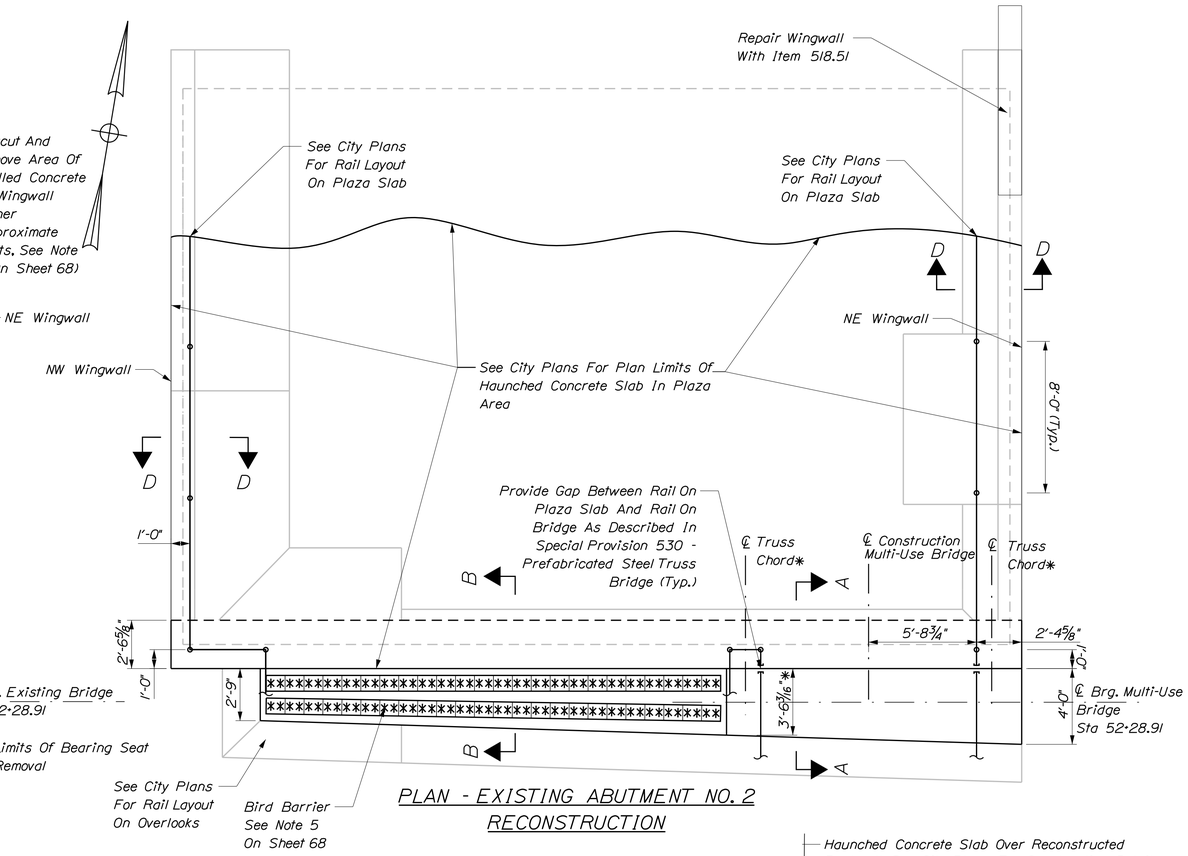

PLAN - EXISTING ABUTMENT NO. 2
RECONSTRUCTION

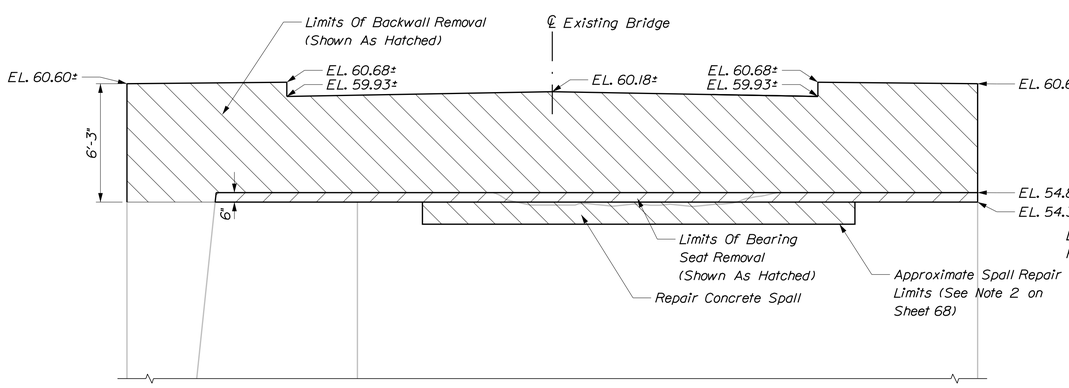

ELEVATION - EXISTING ABUTMENT NO. 2
REMOVAL

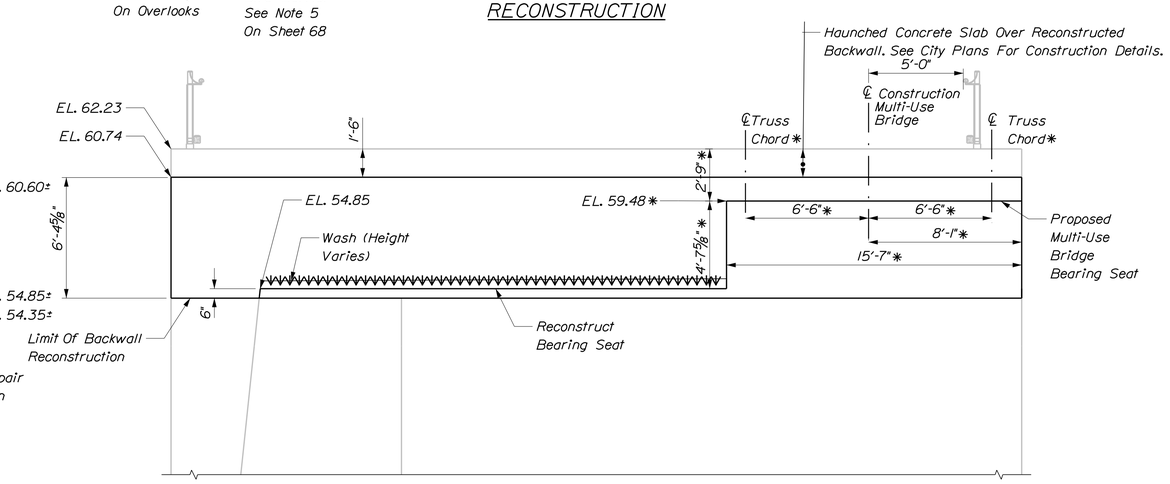

ELEVATION - EXISTING ABUTMENT NO. 2
RECONSTRUCTION

NOTES:
1. See Notes 1 - 3 on Sheet 68.

2. For Sections A-A, B-B, and D-D See Sheet 71.

Stantec

STATE OF MAINE
DEPARTMENT OF TRANSPORTATION

STP-1928(200)

WIN 19282.00

BRIDGE NO. 5661

BRIDGE PLANS

PROJ. MANAGER	NATE BENOIT		
DESIGN-DETAILED	AML	TJA	SEPT 2014
CHECKED-REVIEWED	DOT	AML/TWM	SEPT 2014
DESIGN2-DETAILED2			
DESIGN3-DETAILED3			
REVISIONS 1			
REVISIONS 2			
REVISIONS 3			
REVISIONS 4			
FIELD CHANGES			

SIGNATURE

P.E. NUMBER

DATE

BRIDGE STREET BRIDGE
PRESUMPSCOT RIVER
WESTBROOK CUMBERLAND COUNTY

EXIST. ABUTMENT NO. 2
MODIFICATIONS AND REPAIRS

SHEET NUMBER
69
OF 74

Filename: ...\MSTA\069_N_Exist_Abut_2.dgn Division: BRIDGE Username: common Date:9/15/2014

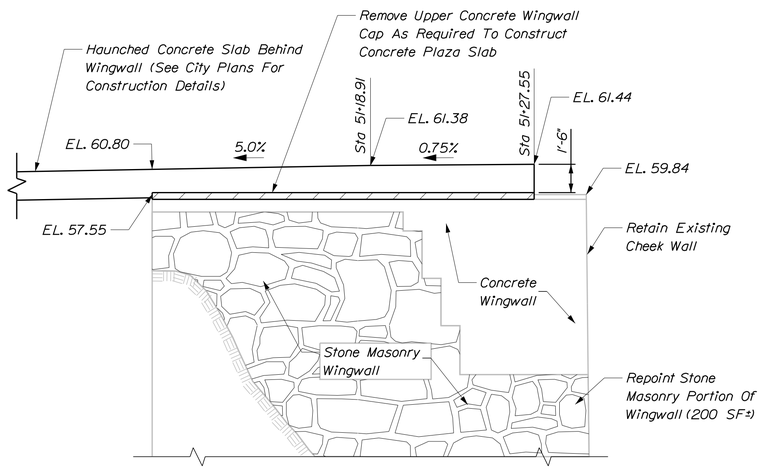

ELEVATION - EXISTING SOUTHEAST WINGWALL

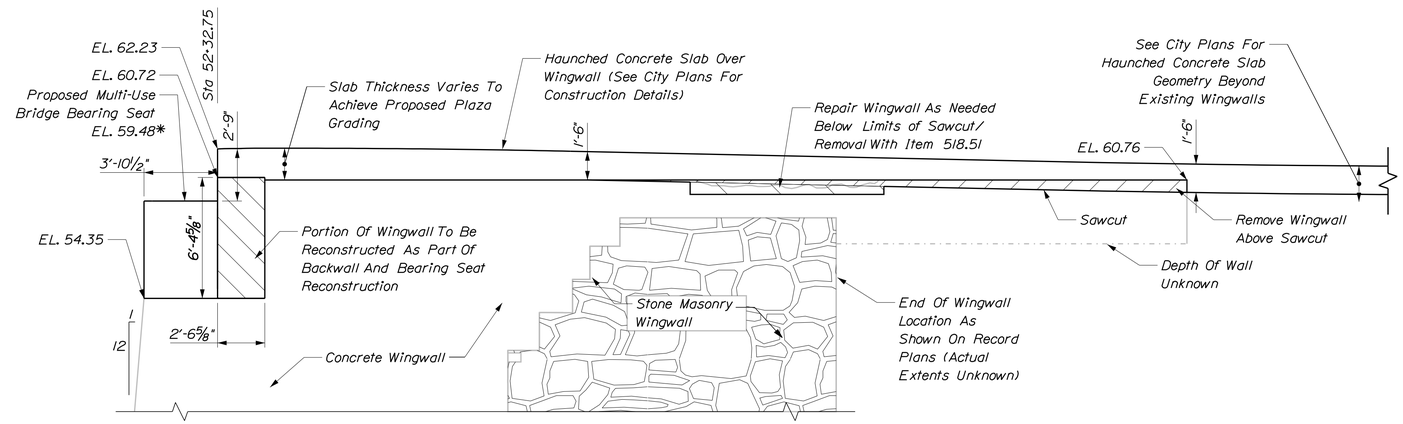

ELEVATION - EXISTING NORTHEAST WINGWALL

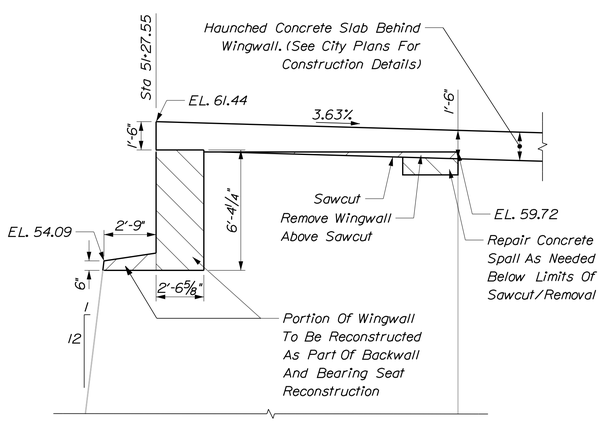

ELEVATION - EXISTING SOUTHWEST WINGWALL

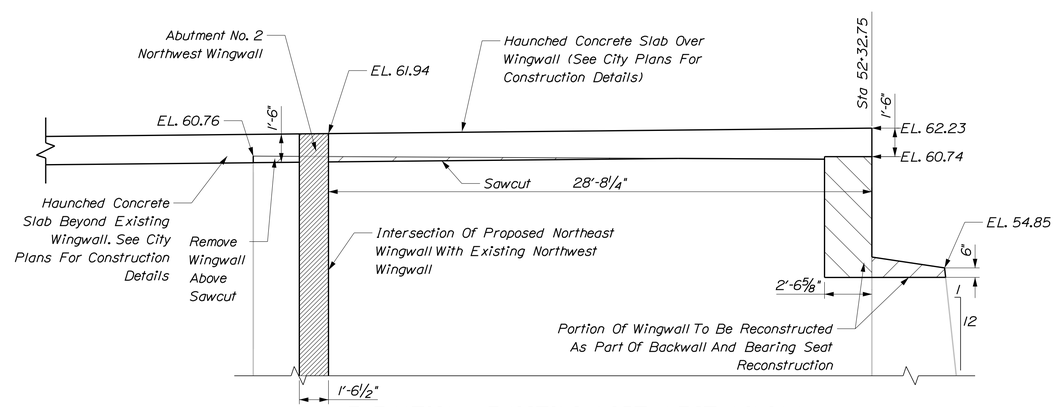

ELEVATION - EXISTING NORTHWEST WINGWALL

Notes:

1. Dimensions denoted with this symbol (✱) are approximate and are subject to change based on final geometry of the multi-use bridge. Final dimensions shall be submitted to the Department by the Contractor during the shop drawing review process and shall be approved prior to commencement of concrete construction. Contractor shall confirm existing abutment elevations and dimensions prior to preparing bridge shop drawings.

2. Riverwalk railing to be installed in haunched concrete slab over wingwalls. See city plans for location of rail and installation details. Railing omitted from elevations for clarity.

3. Torch cut existing rail anchor bolts to a minimum distance of 1/2" below surface of existing/remaining concrete. Patch area around anchor bolts with product(s) from the MaineDOT Qualified Products List for Concrete and Bridge Items. as Directed by the Resident Engineer.

Stantec

STATE OF MAINE
DEPARTMENT OF TRANSPORTATION

STP-1928(200)

WIN 19282.00

BRIDGE NO. 5661

BRIDGE PLANS

PROJ. MANAGER	NATE BENOIT		
DESIGN-DETAILED	AML	TJA	SEPT 2014
CHECKED-REVIEWED	DOT	AML/TWM	SEPT 2014
DESIGN2-DETAILED2			
DESIGN3-DETAILED3			
REVISIONS 1			
REVISIONS 2			
REVISIONS 3			
REVISIONS 4			
FIELD CHANGES			

SIGNATURE

P.E. NUMBER

DATE

BRIDGE STREET BRIDGE
PRESUMPSCOT RIVER
WESTBROOK CUMBERLAND COUNTY

EXIST. WINGWALLS
MODIFICATIONS AND REPAIRS

SHEET NUMBER

70

OF 74

Filename: ...\MSTA\070_S_Exist_Abut_1_WW.dgn Division: BRIDGE Username: common Date:9/15/2014

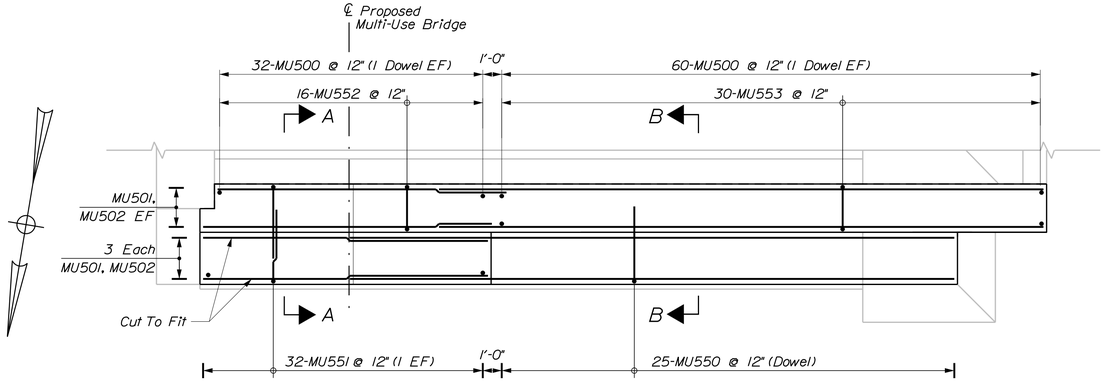

PLAN - EXISTING ABUTMENT NO. 1
REINFORCING LAYOUT

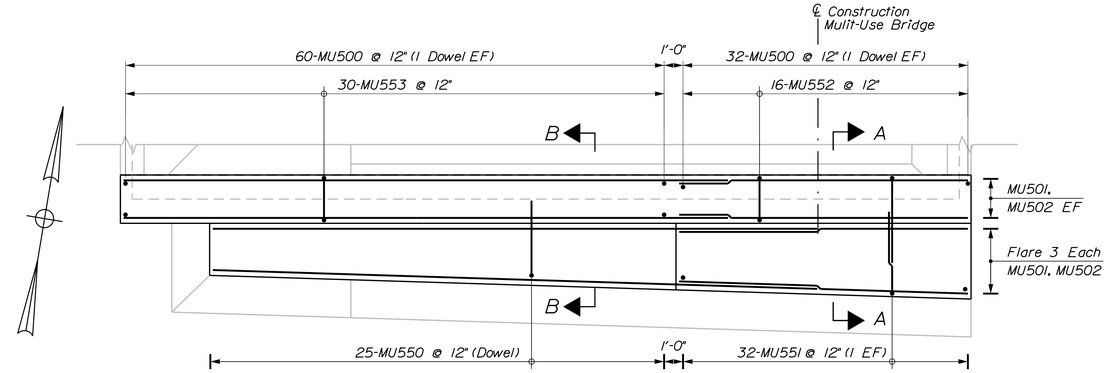

PLAN - EXISTING ABUTMENT NO. 2
REINFORCING LAYOUT

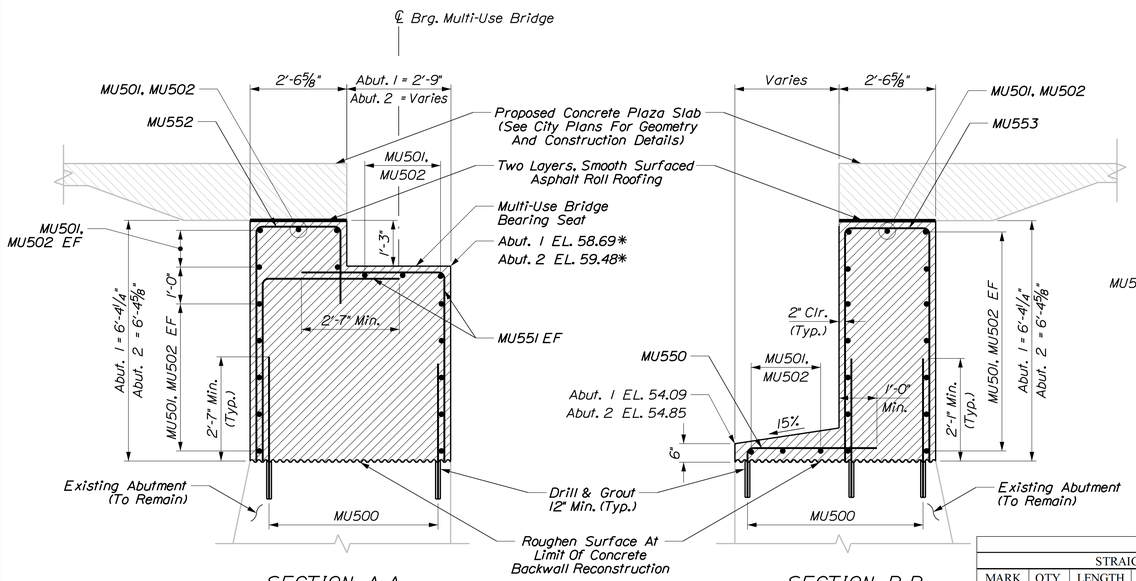

SECTION A-A

SECTION B-B

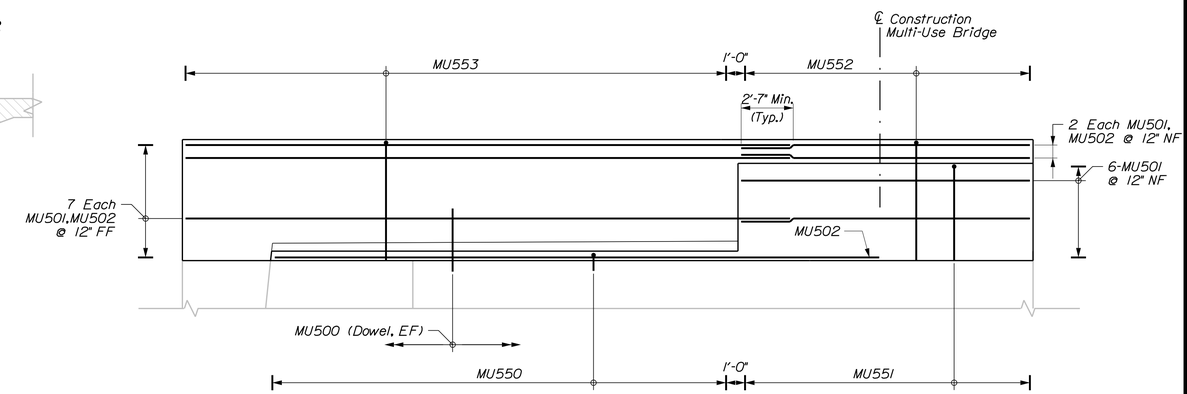

ELEVATION - TYPICAL EXISTING ABUTMENT
REINFORCING LAYOUT
(Abutment No. 2 Shown, Abutment No. 1 Similar)

*Indicates dimensions are approximate and are subject to change based on final geometry of the multi-use bridge. Final dimensions shall be submitted to the Department by the Contractor during the shop drawing review process and shall be approved prior to commencement of construction.

ABUTMENT REINFORCING STEEL

STRAIGHT BARS				BENT BARS													
MARK	QTY.	LENGTH	LOCATION	MARK	QTY.	LENGTH	TYPE	A	B	C	D	E	F	G	H	O	R	LOCATION
Abutment No. 1				**Abutment No. 1**														
MU500	92	3'-9"	Dowel	MU550	25	5'-8"	L	4'-4"	1'-4"									Dowel
MU501	18	15'-3"	Longitudinal - Horizontal	MU551	16	10'-7"	U		6'-2"	2'-4"	2'-1"							Vertical - Beam Seat (NF & FF)
MU502	18	31'-9"	Longitudinal - Horizontal	MU552	32	9'-5"	L	5'-0"	4'-5"									Vertical - Backwall
				MU553	30	14'-8"	U	6'-2"	2'-4"	6'-2"								Vertical - Backwall
Abutment No. 2				**Abutment No. 2**														
MU500	92	3'-9"	Dowel	MU550	25	5'-8"	L	4'-4"	1'-4"									Dowel
MU501	18	15'-3"	Longitudinal - Horizontal	MU551	16	10'-7"	U		6'-2"	2'-4"	2'-1"							Vertical - Beam Seat (NF & FF)
MU502	18	31'-9"	Longitudinal - Horizontal	MU552	32	9'-5"	L	5'-0"	4'-5"									Vertical - Backwall
				MU553	30	14'-8"	U	6'-2"	2'-4"	6'-2"								Vertical - Backwall

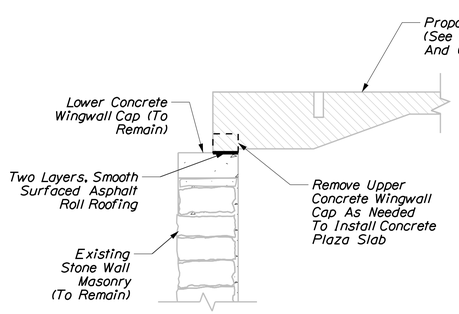

SECTION C-C

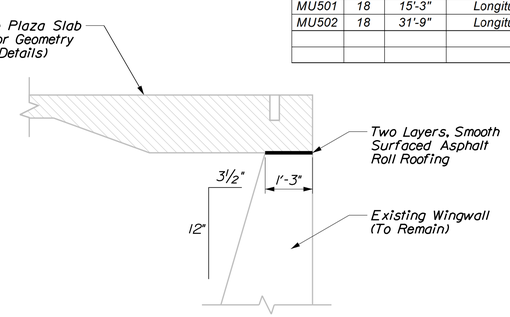

SECTION D-D

TYPE L

TYPE U

LEGEND
NF = Near Face
FF = Far Face
EF = Each Face

Note

1. The anchoring material shall be one of the products listed on the MaineDOT List of Prequalified Type 3 Anchoring Materials. Installation shall be in accordance with the manufacturer's recommendations. The minimum unconfined pullout strength shall be the 18 kips. All cost for installation of the anchor dowels shall be incidental to item 503.12 Reinforcing Steel, Fabricated and Delivered.

Stantec

STATE OF MAINE
DEPARTMENT OF TRANSPORTATION
STP-1928(200)
WIN 19282.00
BRIDGE NO. 5861
BRIDGE PLANS

PROJ. MANAGER	NATE BENOIT	BY	DATE
DESIGN-DETAILED	AML	JTS	SEPT 2014
CHECKED-REVIEWED	DOT	AML/TWM	SEPT 2014
DESIGN2-DETAILED2			
DESIGN3-DETAILED3			
REVISIONS 1			
REVISIONS 2			
REVISIONS 3			
REVISIONS 4			
FIELD CHANGES			

SIGNATURE
P.E. NUMBER
DATE

BRIDGE STREET BRIDGE
PRESUMPSCOT RIVER
WESTBROOK CUMBERLAND COUNTY

EXIST. ABUTMENT & WINGWALLS DETAILS

SHEET NUMBER
71
OF 74

Filename: ...\071_Exist_Wing_Details 1.dgn Division: BRIDGE Username: common Date:9/15/2014

EXISTING RIGHT OF WAY REFERENCES
1) BRIDGE STREET
A) PLAN OF BRIDGE STREET AS REDEFINED BY THE COMMISSIONERS OF CUMBERLAND COUNTY DATED - MAY 20, 1959 BY H.I. & E.C. JORDAN SURVEYORS CUMBERLAND COUNTY COMMISSIONERS PLAN BOOK 7, PAGE 50
B) CUMBERLAND COUNTY COMMISSIONERS RECORDS VOLUME 23D, PAGE 1278 (1961) VARIABLE WIDTH
C) PLAN SHOWING PART OF THE OLD WINDHAM ROAD NOW KNOWN AS BRIDGE AND PIERCE STREETS SURVEYED OCT. 1894 BY H.W. FOSTER CUMBERLAND COUNTY COMMISSIONERS PLAN BOOK 3, PAGE 39
D) CUMBERLAND COUNTY COMMISSIONERS RECORDS VOLUME 16, PAGE 803 (1894) VARIABLE WIDTH
E) CUMBERLAND COUNTY COMMISSIONERS RECORDS VOLUME 9, PAGE 41 (1848) 4 RODS (66') WIDE, 2 RODS (33') WIDE OVER RIVER
F) YORK COUNTY COMMISSIONERS RECORDS VOLUME 11 PAGE 33 (1757) 4 RODS (66') WIDE
2) MAIN STREET
A) PLAN OF THE COUNTY ROAD BETWEEN THE DEERING LINE AND THE GORHAM LINE VIA CUMBERLAND MILLS AND SACCARAPPA VILLAGES SURVEYED BY E.C. JORDAN DATED - 1881 TRACED IN 1884 BY GEO. N. FERNALD CUMBERLAND COUNTY COMMISSIONERS PLAN BOOK 2, PAGE 55
B) CUMBERLAND COUNTY COMMISSIONERS RECORDS VOLUME 15 PAGE 309 (1882) VARIABLE WIDTH
NOTE: THE RIGHT OF WAY FOR MAIN STREET WAS DEFINED BY USING A 3' OFFSET FROM EXISTING MONUMENTATION, AS SHOWN ON THE FOLLOWING PLANS BY OWEN HASKELL:
1. PLAN ON MAIN STREET FOR HENRY GAGNON, BY OWEN HASKELL, DATED 2/24/87, JOB# 86199WE
2. PLAN OF PARCEL 13, BY OWEN HASKELL, DATED 7/5/74 REV. 9/4/75, JOB# 7399WE, DRWG.# 2
3. PLAN OF PARCEL 5 AND EASEMENTS I & II, BY OWEN HASKELL, DATED 8/7/75, JOB# 7399WE, DRWG.# 7
4. ALTA/ACSM SURVEY FOR WINNER PROPERTIES, BY OWEN HASKELL, 10/15/97, JOB# 97242, DRWG.# 1
5. C.C.R.D. PLAN BOOK 197, PAGE 103, BY SEBAGO TECHNICS
3) DANA COURT
A) C.C.R.D PLAN BOOK 203, PAGE 311.
B) C.C.R.D PLAN BOOK 205, PAGE 742 & 743
4) DANA STREET
A) CITY OF WESTBROOK RECORDS ACCEPTED NOVEMBER 13, 1959 30 FEET WIDE, 267 FEET IN LENGTH
B) C.C.R.D. PLAN BOOK 211, PAGE 289
C) C.C.R.D. PLAN BOOK 210, PAGE 191
D) C.C.R.D. PLAN BOOK 189, PAGE 60
E) C.C.R.D. PLAN BOOK 11, PAGE 85
5) MECHANIC STREET
A) PLAN OF DEVELOPMENT PARCELS NO. 16 & 17 WESTBROOK DOWNTOWN PROJECT ME. R-27 BY OWEN HASKELL DATED - FEBRUARY 10, 1975 LAST REVISED OCTOBER 10, 1978 JOB NO. 7399WE, DRWG. NO. 4
B) CITY OF WESTBROOK, BOOK OF STREETS, PAGE 2 (ON FILE WITH THE CITY CLERK) TITLED "PART OF MECHANIC STREET" DATED - JULY 17, 1905 VARIABLE WIDTH

NOTE: NO ACCEPTANCE OR LAYOUT OF THE BRIDGE STREET SPUR WAS FOUND ON FILE WITH THE CITY OF WESTBROOK. SEE PLAN OF LAND IN WESTBROOK, MAINE FOR WESTBROOK URBAN RENEWAL AUTHORITY, BY OWEN HASKELL, DATED FEBRUARY 25, 1976 JOB NO. 7399WE, DRWG. NO. 11, FOR SPUR LOCATION.

HORIZONTAL DATUM - US STATE PLANE NAD83 (1996)
ZONE - MAINE 2000 WEST ZONE
VERTICAL DATUM - NAVD88
COMBINED SCALE FACTOR - 0.9999770

NOTE: PRESCRIPTIVE EASEMENT FOR HIGHWAY PURPOSES WITHIN LIMITS OF WROUGHT PORTION (L.O.W.P.)

CURVE DATA
PI = 22+62.04
D = 1°30'28.0"
Δ = 7°17'04.3" RT.
R = 3800.00
L = 483.12
T = 241.89
E = 7.69

PLAN OF DEVELOPMENT PARCELS NO. 16 & 17 WESTBROOK DOWNTOWN PROJECT ME. R-27 BY OWEN HASKELL, INC. PLAN DATE - FEBRUARY 10, 1975 LAST REVISED - OCTOBER 10, 1978 JOB NO. 7399WE, DRWG. NO. 4

SYMBOLS
● IP or ● P/P (IRON PIPE or PIN FOUND)
□ S.T. (SEPTIC TANK)
▣ (ROW MONUMENT)
&BM (TRAVERSE POINT)
WELL (WELL)
GRADING LIMIT LINE
CONSTRUCTION LIMIT LINE
PROPERTY LINE
LIMITS OF WROUGHT PORTION (L.O.W.P.)
EXISTING RIGHT OF WAY
NEW RIGHT OF WAY
NEW ROW WITHIN EXIST. ROW
CONTROL OF ACCESS
WATER LINE
GAS LINE
ELECTRIC LINE
TELEPHONE LINE
SEWER LINE

ITEM	TECH	CHECKED
BASE MAP		
EXIST. R/W	N.B.D./N.T.A.	C.W.K.
PROP. LINES	N.B.D.	N.T.A.
AREAS	N.T.A.	G.L.L.

STATE OF MAINE
DEPARTMENT OF TRANSPORTATION
16 STATE HOUSE STATION - AUGUSTA, ME 04333-0016
WESTBROOK
RIGHT OF WAY MAP

REVISIONS

NO.	DATE	DESCRIPTION	BY

PLAN FILED IN PLAN BOOK		PAGE	COUNTY RECORD		
NO.	GRANTOR	INSTRUMENT	DATE	BOOK	PAGE

DAVID BERNHARDT
COMMISSIONER
JOYCE NOEL TAYLOR
CHIEF ENGINEER
DATE

STATE OF MAINE
CHRISTOPHER W. KNIGHT 2257
PROFESSIONAL LAND SURVEYOR

To the best of my knowledge and belief the Highway Right of Way lines depicted hereon are based upon a survey conforming to the Standards of Practice promulgated by the Maine Board of Licensure for Professional Land Surveyors 02-360 CMR, Chapter 90; Exceptions: (1) No separate survey report, (2) Monumentation only as shown on plan. See sheet X of this plan set for coordinates. (3) Other boundary lines, including lines between abutters are approximate and for general reference purposes only.

STATE HIGHWAY "12" A
MAIN STREET / ROUTE 25B
WESTBROOK CUMBERLAND COUNTY
FEDERAL AID PROJECT NO. STP-1928(200)

SEPTEMBER 2014	RIGHT-OF-WAY MAP	D.O.T. FILE NO. 3-592
SCALE 1" = 25'	SHEET 1 OF 3	

SHEET NUMBER
72
OF 74

Filename: ...\00\row\msta\072_RWPLAN1.dgn Division: ROW Username: Nicholas.Acheson Date:9/17/2014

Filename: ...\00\row\msto\073_RWPLAN2.dgn Division: ROW Username: Nicholas.Acheson Date:9/17/2014

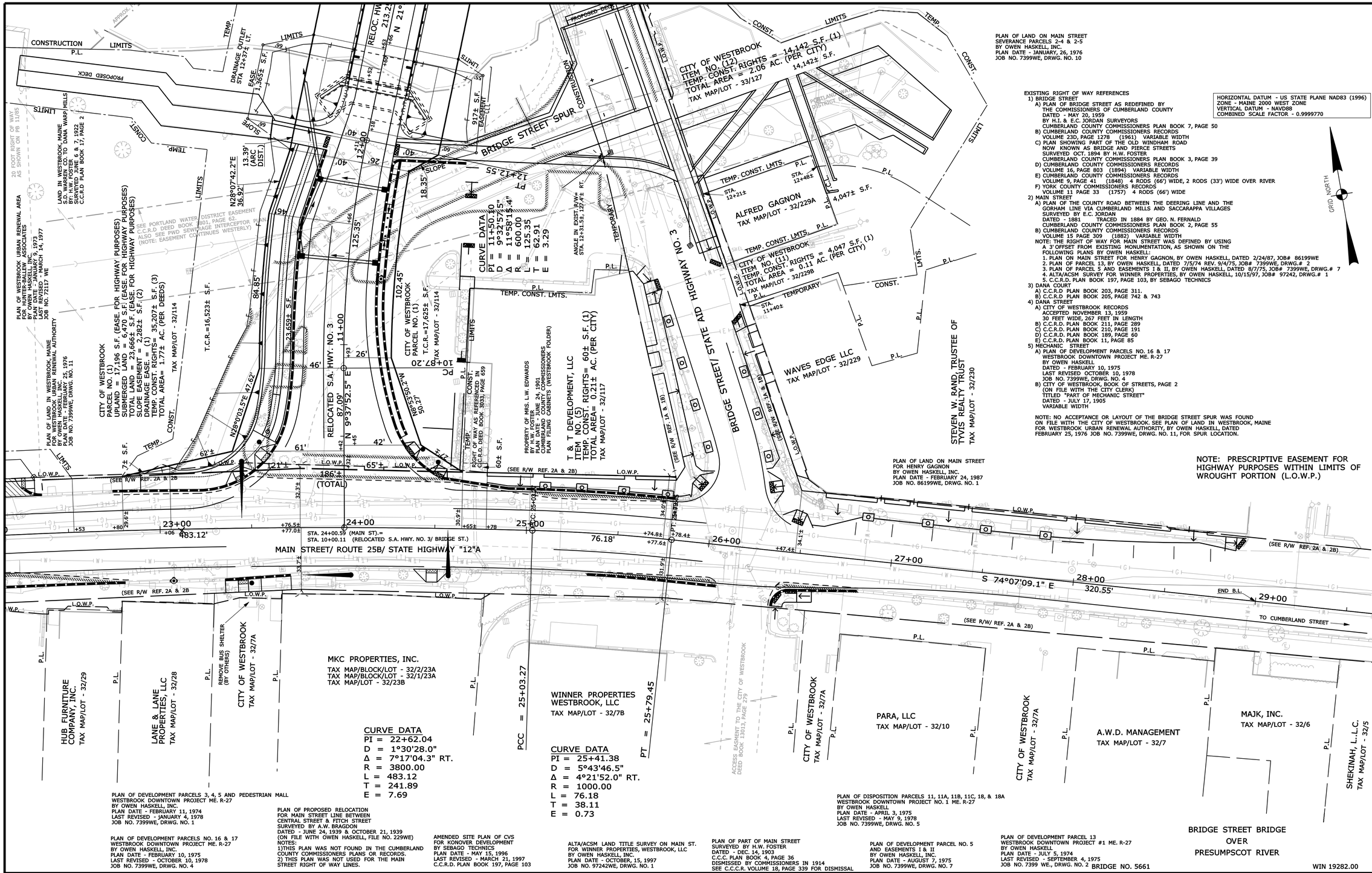

PLAN OF LAND ON MAIN STREET
SEVERANCE PARCELS 2-4 & 2-5
BY OWEN HASKELL, INC.
PLAN DATE - JANUARY, 26, 1976
JOB NO. 7399WE, DRWG. NO. 10

HORIZONTAL DATUM - US STATE PLANE NAD83 (1996)
ZONE - MAINE 2000 WEST ZONE
VERTICAL DATUM - NAVD88
COMBINED SCALE FACTOR - 0.9999770

EXISTING RIGHT OF WAY REFERENCES
1) BRIDGE STREET
A) PLAN OF BRIDGE STREET AS REDEFINED BY THE COMMISSIONERS OF CUMBERLAND COUNTY DATED - MAY 20, 1959 BY H.I. & E.C. JORDAN SURVEYORS CUMBERLAND COUNTY COMMISSIONERS PLAN BOOK 7, PAGE 50
B) CUMBERLAND COUNTY COMMISSIONERS RECORDS VOLUME 23D, PAGE 1278 (1961) VARIABLE WIDTH
C) PLAN SHOWING PART OF THE OLD WINDHAM ROAD NOW KNOWN AS BRIDGE AND PIERCE STREETS SURVEYED OCT. 1894 BY H.W. FOSTER CUMBERLAND COUNTY COMMISSIONERS PLAN BOOK 3, PAGE 39
D) CUMBERLAND COUNTY COMMISSIONERS RECORDS VOLUME 16, PAGE 803 (1894) VARIABLE WIDTH
E) CUMBERLAND COUNTY COMMISSIONERS RECORDS VOLUME 9, PAGE 41 (1848) 4 RODS (66') WIDE, 2 RODS (33') WIDE OVER RIVER
F) YORK COUNTY COMMISSIONERS RECORDS VOLUME 11 PAGE 33 (1757) 4 RODS (66') WIDE
2) MAIN STREET
A) PLAN OF THE COUNTY ROAD BETWEEN THE DEERING LINE AND THE GORHAM LINE VIA CUMBERLAND MILLS AND SACCARAPPA VILLAGES SURVEYED BY E.C. JORDAN DATED - 1881 TRACED IN 1884 BY GEO. N. FERNALD CUMBERLAND COUNTY COMMISSIONERS PLAN BOOK 2, PAGE 55
B) CUMBERLAND COUNTY COMMISSIONERS RECORDS VOLUME 15 PAGE 309 (1882) VARIABLE WIDTH
NOTE: THE RIGHT OF WAY FOR MAIN STREET WAS DEFINED BY USING A 3' OFFSET FROM EXISTING MONUMENTATION, AS SHOWN ON THE FOLLOWING PLANS BY OWEN HASKELL:
1. PLAN ON MAIN STREET FOR HENRY GAGNON, BY OWEN HASKELL, DATED 2/24/87, JOB# 86199WE
2. PLAN OF PARCEL 13, BY OWEN HASKELL, DATED 7/5/74 REV. 9/4/75, JOB# 7399WE, DRWG.# 2
3. PLAN OF PARCEL 5 AND EASEMENTS I & II, BY OWEN HASKELL, DATED 8/7/75, JOB# 7399WE, DRWG.# 7
4. ALTA/ACSM SURVEY FOR WINNER PROPERTIES, BY OWEN HASKELL, 10/15/97, JOB# 97242, DRWG.# 1
5. C.C.R.D. PLAN BOOK 197, PAGE 103, BY SEBAGO TECHNICS
3) DANA COURT
A) C.C.R.D PLAN BOOK 203, PAGE 311.
B) C.C.R.D PLAN BOOK 205, PAGE 742 & 743
4) DANA STREET
A) CITY OF WESTBROOK RECORDS ACCEPTED NOVEMBER 13, 1959 30 FEET WIDE, 267 FEET IN LENGTH
B) C.C.R.D. PLAN BOOK 211, PAGE 289
C) C.C.R.D. PLAN BOOK 210, PAGE 191
D) C.C.R.D. PLAN BOOK 189, PAGE 60
E) C.C.R.D. PLAN BOOK 11, PAGE 85
5) MECHANIC STREET
A) PLAN OF DEVELOPMENT PARCELS NO. 16 & 17 WESTBROOK DOWNTOWN PROJECT ME. R-27 BY OWEN HASKELL DATED - FEBRUARY 10, 1975 LAST REVISED OCTOBER 10, 1978 JOB NO. 7399WE, DRWG. NO. 4
B) CITY OF WESTBROOK, BOOK OF STREETS, PAGE 2 (ON FILE WITH THE CITY CLERK) TITLED "PART OF MECHANIC STREET" DATED - JULY 17, 1905 VARIABLE WIDTH

NOTE: NO ACCEPTANCE OR LAYOUT OF THE BRIDGE STREET SPUR WAS FOUND ON FILE WITH THE CITY OF WESTBROOK. SEE PLAN OF LAND IN WESTBROOK, MAINE FOR WESTBROOK URBAN RENEWAL AUTHORITY, BY OWEN HASKELL, DATED FEBRUARY 25, 1976 JOB NO. 7399WE, DRWG. NO. 11, FOR SPUR LOCATION.

NOTE: PRESCRIPTIVE EASEMENT FOR HIGHWAY PURPOSES WITHIN LIMITS OF WROUGHT PORTION (L.O.W.P.)

PLAN OF LAND ON MAIN STREET
FOR HENRY GAGNON
BY OWEN HASKELL, INC.
PLAN DATE - FEBRUARY 24, 1987
JOB NO. 86199WE, DRWG. NO. 1

PLAN OF DEVELOPMENT PARCELS 3, 4, 5 AND PEDESTRIAN MALL
WESTBROOK DOWNTOWN PROJECT ME. R-27
BY OWEN HASKELL, INC.
PLAN DATE - FEBRUARY 11, 1974
LAST REVISED - JANUARY 4, 1978
JOB NO. 7399WE, DRWG. NO. 1

PLAN OF DEVELOPMENT PARCELS NO. 16 & 17
WESTBROOK DOWNTOWN PROJECT ME. R-27
BY OWEN HASKELL, INC.
PLAN DATE - FEBRUARY 10, 1975
LAST REVISED - OCTOBER 10, 1978
JOB NO. 7399WE, DRWG. NO. 4

PLAN OF PROPOSED RELOCATION
FOR MAIN STREET LINE BETWEEN
CENTRAL STREET & FITCH STREET
SURVEYED BY A.W. BRAGDON
DATED - JUNE 24, 1939 & OCTOBER 21, 1939
(ON FILE WITH OWEN HASKELL, FILE NO. 229WE)
NOTES:
1)THIS PLAN WAS NOT FOUND IN THE CUMBERLAND COUNTY COMMISSIONERS PLANS OR RECORDS.
2) THIS PLAN WAS NOT USED FOR THE MAIN STREET RIGHT OF WAY LINES.

AMENDED SITE PLAN OF CVS
FOR KONOVER DEVELOPMENT
BY SEBAGO TECHNICS
PLAN DATE - MAY 15, 1996
LAST REVISED - MARCH 21, 1997
C.C.R.D. PLAN BOOK 197, PAGE 103

ALTA/ACSM LAND TITLE SURVEY ON MAIN ST.
FOR WINNER PROPERTIES, WESTBROOK, LLC
BY OWEN HASKELL, INC.
PLAN DATE - OCTOBER, 15, 1997
JOB NO. 97242WE, DRWG. NO. 1

PLAN OF PART OF MAIN STREET
SURVEYED BY H.W. FOSTER
DATED - DEC. 14, 1903
C.C.C. PLAN BOOK 4, PAGE 36
DISMISSED BY COMMISSIONERS IN 1914
SEE C.C.C.R. VOLUME 18, PAGE 339 FOR DISMISSAL

PLAN OF DISPOSITION PARCELS 11, 11A, 11B, 11C, 18, & 18A
WESTBROOK DOWNTOWN PROJECT NO. 1 ME. R-27
BY OWEN HASKELL
PLAN DATE - APRIL 3, 1975
LAST REVISED - MAY 9, 1978
JOB NO. 7399WE, DRWG. NO. 5

PLAN OF DEVELOPMENT PARCEL NO. 5
AND EASEMENTS I & II
BY OWEN HASKELL, INC.
PLAN DATE - AUGUST 7, 1975
JOB NO. 7399WE, DRWG. NO. 7

PLAN OF DEVELOPMENT PARCEL 13
WESTBROOK DOWNTOWN PROJECT #1 ME. R-27
BY OWEN HASKELL
PLAN DATE - JULY 5, 1974
LAST REVISED - SEPTEMBER 4, 1975
JOB NO. 7399 WE., DRWG. NO. 2

SYMBOLS
IP or IPF (IRON PIPE or PIN FOUND)
ST. (SEPTIC TANK)
&BM (TRAVERSE POINT)
(WELL)
GROUNDING UNIT LINE
CONSTRUCTION LIMIT LINE
PROPERTY LINE
LIMITS OF WROUGHT PORTION (L.O.W.P.)
EXISTING RIGHT OF WAY
NEW RIGHT OF WAY
NEW ROW WITHIN EXIST. ROW
CONTROL OF ACCESS
WATER LINE
GAS LINE
ELECTRIC LINE
TELEPHONE LINE
SEWER LINE

ITEM	TECH	CHECKED
BASE MAP	N.B.D./N.T.A.	C.W.K.
EXIST. R/W	N.B.D.	N.T.A.
PROP. LINES	N.T.A.	G.L.L.
AREAS		

STATE OF MAINE
DEPARTMENT OF TRANSPORTATION
16 STATE HOUSE STATION - AUGUSTA, ME 04333-0016
WESTBROOK
RIGHT OF WAY MAP

REVISIONS

NO.	DATE	DESCRIPTION	BY

PLAN FILED IN PLAN BOOK PAGE COUNTY RECORD

NO.	GRANTOR	INSTRUMENT	DATE	BOOK	PAGE

DAVID BERNHARDT
COMMISSIONER
JOYCE NOEL TAYLOR
CHIEF ENGINEER
DATE

STATE OF MAINE
CHRISTOPHER W. KNIGHT 2027
PROFESSIONAL LAND SURVEYOR

To the best of my knowledge and belief the Highway Right of Way lines depicted hereon are based upon a survey conforming to the Standards of Practice promulgated by the Maine Board of Licensure for Professional Land Surveyors 02-360 CMR, Chapter 90; Exceptions: (1) No separate survey report, (2) Monumentation only as shown on plan. See sheet X of this plan set for coordinates. (3) Other boundary lines, including lines between abutters are approximate and for general reference purposes only.

STATE AID HIGHWAY NO. 3
BRIDGE STREET
WESTBROOK CUMBERLAND COUNTY
FEDERAL AID PROJECT NO. STP-1928(200)

SEPTEMBER 2014	RIGHT-OF-WAY MAP	D.O.T. FILE NO. 3-592
SCALE 1" = 25'	SHEET 2 OF 3	

SHEET NUMBER
73
OF 74

Filename: ...\00\row\mnsto\074_RWPLAN3.dgn Division: ROW Username: Nicholas.Acheson Date:9/17/2014

PLAN OF WESTBROOK URBAN RENEWAL AREA
FOR HUNTER-BALLEW ASSOCIATES
BY OWEN HASKELL, INC.
PLAN DATE - JANUARY 9, 1973
LAST REVISED - MARCH 14, 1977
JOB NO. 72117 WE

PLAN OF LAND IN WESTBROOK, MAINE
FOR WESTBROOK URBAN RENEWAL AUTHORITY
BY OWEN HASKELL, INC.
PLAN DATE - FEBRUARY 25, 1976
JOB NO. 7399WE, DRWG. NO. 11

LAND IN WESTBROOK, MAINE
S.D. WARREN CO. TO DANA WARP MILLS
BY: H.W. FOSTER
SURVEYED JUNE 6 & 7, 1922
C.C.R.D PLAN BOOK 17, PAGE 2

SEE FOLLOWING REFERENCES FOR DAM, WATER POWER, AND RIPARIAN RIGHTS BENEFITING PARCEL NO. (2):
C.C.R.D. DEED BOOK 694, PAGE 1, DATED JULY 10, 1900
C.C.R.D. DEED BOOK 694, PAGE 15, DATED JULY 11, 1900
C.C.R.D. DEED BOOK 964, PAGE 459, DATED JULY 26, 1916
C.C.R.D. DEED BOOK 975, PAGE 128, DATED MAY 8, 1916

SACCARAPPA PROJECT FERC NO. 2897
PLAN OF DAM AND PROJECT LOCATION AREA
S.D. WARREN COMPANY, WESTBROOK, MAINE
BY: SEBAGO TECHNICS
PLAN DATE - MARCH 5, 2012
EXHIBIT G, SHEETS 1 & 2
FERC DWG 2897-1010 & 2897-1011

SACCARAPPA PROJECT FERC NO. 2897
(SEE FERC PLANS BY SEBAGO TECHNICS FOR PROJECT BOUNDARY)

PLAN OF GINGHAM MILL PROPERTY
BY H.W. FOSTER
SURVEYED MAY 17, 1900
C.C.R.D. PLAN BOOK 9, PAGE 37

CITY OF WESTBROOK
PARCEL NO. (1)
UPLAND = 17,196 S.F. (EASE. FOR HIGHWAY PURPOSES)
SUBMERGED LAND = 6,470 S.F. (EASE. FOR HIGHWAY PURPOSES)
TOTAL LAND = 23,666± S.F. (EASE. FOR HIGHWAY PURPOSES)
SLOPE EASEMENT = 2,282± S.F. (2)
DRAINAGE EASE. = (1)
TEMP. CONST. RIGHTS= 35,207± S.F. (3)
TOTAL AREA= 1.77± AC. (PER DEEDS)
TAX MAP/LOT - 32/114

S.D. WARREN COMPANY
A/K/A SAPPI FINE PAPER NORTH AMERICA
PARCEL NO. (2)
UPLAND = 1,691± S.F. (EASE. FOR HIGHWAY PURPOSES)
SUBMERGED LAND = 5,350± S.F. (EASE. FOR HIGHWAY PURPOSES)
TOTAL LAND = 7,041± S.F. (1) (EASE. FOR HIGHWAY PURPOSES)
SLOPE EASEMENT = 83± S.F. (1)
TEMP. CONST. RIGHTS = 3,326± S.F. (2)
TOTAL AREA = VAST HOLDINGS

DWM, LLC
PARCEL NO. (3)
UPLAND = 1,766± S.F. (1) (EASE. FOR HIGHWAY PURPOSES)
SUBMERGED LAND = 32± S.F. (1) (EASE. FOR HIGHWAY PURPOSES)
TOTAL LAND = 1,798± S.F. (1) (EASE. FOR HIGHWAY PURPOSES)
SLOPE EASEMENT = 2,789± S.F. (1)
DRAINAGE EASE. = (1)
TEMP. CONST. RIGHTS = 333± S.F. (1)
TOTAL AREA= 1.70± AC. (PER CITY)
TAX MAP/LOT - 32/121

CURVE DATA
PI = 15+38.50
D = 31°49'51.6"
Δ = 64°06'10.6"
R = 180.00
L = 201.39
T = 112.70
E = 32.37

CITY OF WESTBROOK
PARCEL NO. (1)
T.C.R.=17,625± S.F.
TAX MAP/LOT - 32/114

CURVE DATA
PI = 11+50.10
D = 9°32'57.5"
Δ = 11°58'15.4"
R = 600.00
L = 125.35
T = 62.91
E = 3.29

T & T DEVELOPMENT, LLC
ITEM NO. (5)
TEMP. CONST. RIGHTS= 60± S.F. (1)
TOTAL AREA= 0.21± AC. (PER CITY)
TAX MAP/LOT - 32/117

CITY OF WESTBROOK
ITEM NO. (9)
TEMP. CONST. RIGHTS= 100± S.F. (1)
TOTAL AREA= 100± S.F. (CALC.)

CITY OF WESTBROOK
ITEM NO. (8)
TEMP. CONST. RIGHTS= 690± S.F. (1)
TOTAL AREA= 745± S.F. (CALC.)

PENDLETON WESTBROOK SPE, LLC
ZAK WESTBROOK SPE, LLC
SPC WESTBROOK SPE, LLC
SRA WESTBROOK SPE, LLC
PARIS WESTBROOK SPE, LLC
ITEM NO. (10)
TEMP. CONST. RIGHTS= 735± S.F. (1)
TOTAL AREA= 0.85± AC. (PER CITY)
TAX MAP/LOT - 32/221

CITY OF WESTBROOK
ITEM NO. (6)
TEMP. CONST. RIGHTS= 408± S.F. (1)
TOTAL AREA= 1.47± AC. (PER CITY)

S.D. WARREN COMPANY
A/K/A SAPPI FINE PAPER NORTH AMERICA
ITEM NO. (7)
TEMP. CONST. RIGHTS= 1,370± S.F. (1)
TOTAL AREA= VAST HOLDINGS

CITY OF WESTBROOK
ITEM NO. (2) RIGHTS = 14,142 S.F. (1)
TEMP. CONST. = 2.06 AC. (PER CITY)
TOTAL AREA = 14,142± S.F.
TAX MAP/LOT - 33/127

CITY OF WESTBROOK
ITEM NO. (1) RIGHTS = 4,047 S.F. (1)
TEMP. CONST. = 0.11 AC. (PER CITY)
TOTAL AREA = 4,047± S.F.
TAX MAP/LOT - 32/229B

ALFRED GAGNON
TAX MAP/LOT - 32/229A

WAYES EDGE LLC
TAX MAP/LOT - 32/229

PROPERTY OF MRS. L.W. EDWARDS
BY H.W. FOSTER
PLAN DATE - JUNE 24, 1901
CUMBERLAND COUNTY COMMISSIONERS
PLAN FILING CABINETS (WESTBROOK FOLDER)

UPON COMPLETION OF THE PROJECT, THE DEPARTMENT'S DESIGNATION OF STATE HIGHWAY NO. 3 WILL MOVE FROM THE OLD BRIDGE STREET BRIDGE (OLD RIGHT OF WAY) TO THE NEW BRIDGE STREET BRIDGE (NEW RIGHT OF WAY). THE OLD RIGHT OF WAY WILL BE RECLASSIFIED AS A TOWN WAY AND OWNERSHIP WITHIN THE LIMITS OF THE OLD RIGHT OF WAY, INCLUDING ALL ASSOCIATED STRUCTURES WILL REVERT TO THE CITY OF WESTBROOK. SEE MUNICIPAL/STATE AGREEMENT, DATED 7/8/2014, (TEDOCS #1384429) PAGE 3 OF 5, SUBSECTION K.

ALTA/ACSM LAND TITLE SURVEY FOR
ZAK WESTBROOK SPE, LLC ET AL.
BY TITCOMB ASSOCIATES
PLAN DATE - AUGUST 3, 2004
LAST REVISED- NOVEMBER 11, 2005
C.C.R.D PLAN BOOK 205, PAGE 742 & 743

PLAN OF PROPOSED DANA COURT RELOCATION
FOR ENVIROMENTAL ENGINEERING & REMEDIATION
BY TITCOMB ASSOCIATES
PLAN DATE - FEBRUARY 24, 2003
C.C.R.D PLAN BOOK 203, PAGE 311

PLAN OF PROPERTY AT SACCARAPPA VILLAGE, WESTBROOK
OWNED BY WESBROOK MANUFACTURING CO.
FROM SURVEYS MADE MAY 26, 1858 AND
RESURVEYS MADE MAY 15, 1872
C.C.R.D PLAN BOOK 6, PAGE 45

NOTE: PRESCRIPTIVE EASEMENT FOR HIGHWAY PURPOSES WITHIN LIMITS OF WROUGHT PORTION (L.O.W.P.)

HORIZONTAL DATUM - US STATE PLANE NAD83 (1996)
ZONE - MAINE 2000 WEST ZONE
VERTICAL DATUM - NAVD88
COMBINED SCALE FACTOR - 0.9999770

SEE SHEETS 1 & 2 FOR R/W REFERENCES

PLAN OF LAND CONVEYED BY THE TRUSTEEES ESTATE OF S. D. WARREN TO LYMAN COUSENS & WOODBURY DANA BY H.W. FOSTER
PLAN DATE - AUGUST 1906
C.C.R.D PLAN BOOK 11, PAGE 45

PLAN OF LAND IN WESTBROOK, ME BELONGING TO WOODBURY K. DANA
PLAN DATE - APRIL 10, 1919
C.C.R.D PLAN BOOK 14, PAGE 18

BRIDGE STREET BRIDGE
OVER
PRESUMPSCOT RIVER

BRIDGE NO. 5661 WIN 19282.00

SYMBOLS
• IP or ⊕ P/P (IRON PIPE or PIN FOUND) ○WELL (WELL)
□ S.T. (SEPTIC TANK) GRADING LIMIT LINE
⊠ (ROW MONUMENT) CONSTRUCTION LIMIT LINE
&BM (TRAVERSE POINT) PROPERTY LINE - RE
W WATER LINE LIMITS OF WROUGHT PORTION (L.O.W.P.)
G GAS LINE EXISTING RIGHT OF WAY
E ELECTRIC LINE NEW RIGHT OF WAY
T TELEPHONE LINE NEW ROW WITHIN EXIST. ROW
SEWER LINE CONTROL OF ACCESS

ITEM	TECH	CHECKED
BASE MAP		
EXIST. R/W	N.B.D./N.T.A.	C.W.K.
PROP. LINES	N.B.D.	N.T.A.
AREAS	N.T.A.	G.L.L.

STATE OF MAINE
DEPARTMENT OF TRANSPORTATION
16 STATE HOUSE STATION - AUGUSTA, ME 04333-0016
WESTBROOK
RIGHT OF WAY MAP

REVISIONS

NO.	DATE	DESCRIPTION	BY

PLAN FILED IN PLAN BOOK PAGE COUNTY RECORD

NO.	GRANTOR	INSTRUMENT	DATE	BOOK	PAGE

DAVID BERNHARDT
COMMISSIONER
JOYCE NOEL TAYLOR
CHIEF ENGINEER
DATE

STATE OF MAINE
CHRISTOPHER W. KNIGHT
2257
PROFESSIONAL LAND SURVEYOR

To the best of my knowledge and belief the Highway Right of Way lines depicted hereon are based upon a survey conforming to the Standards of Practice promulgated by the Maine Board of Licensure for Professional Land Surveyors 02-360 CMR, Chapter 90; Exceptions: (1) No separate survey report, (2) Monumentation only as shown on plan. See sheet X of this plan set for coordinates. (3) Other boundary lines, including lines between abutters are approximate and for general reference purposes only.

STATE AID HIGHWAY NO. 3
BRIDGE STREET
WESTBROOK CUMBERLAND COUNTY
FEDERAL AID PROJECT NO. STP-1928(200)

SEPTEMBER 2014 | RIGHT-OF-WAY MAP | D.O.T. FILE NO. 3-592
SCALE 1" = 25' | SHEET 3 OF 3

SHEET NUMBER
74
OF 74

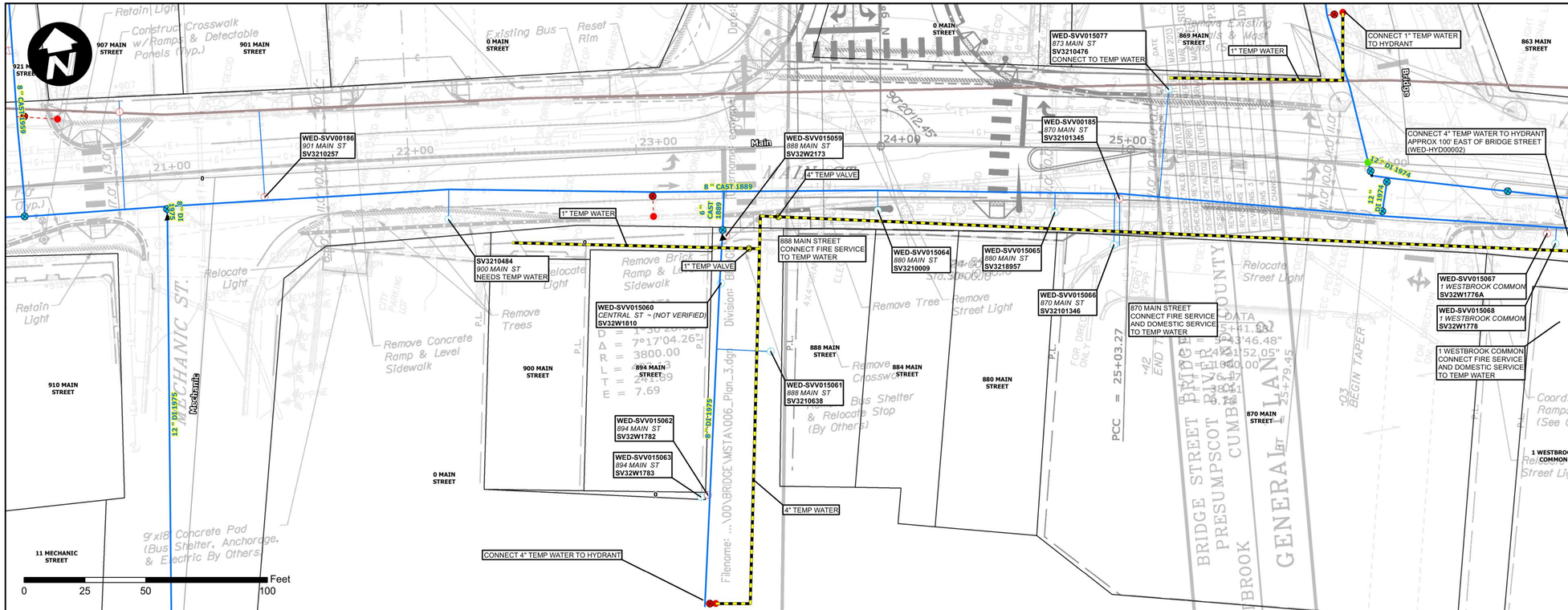

EXISTING AND TEMPORARY MAINS 1 " = 25 '

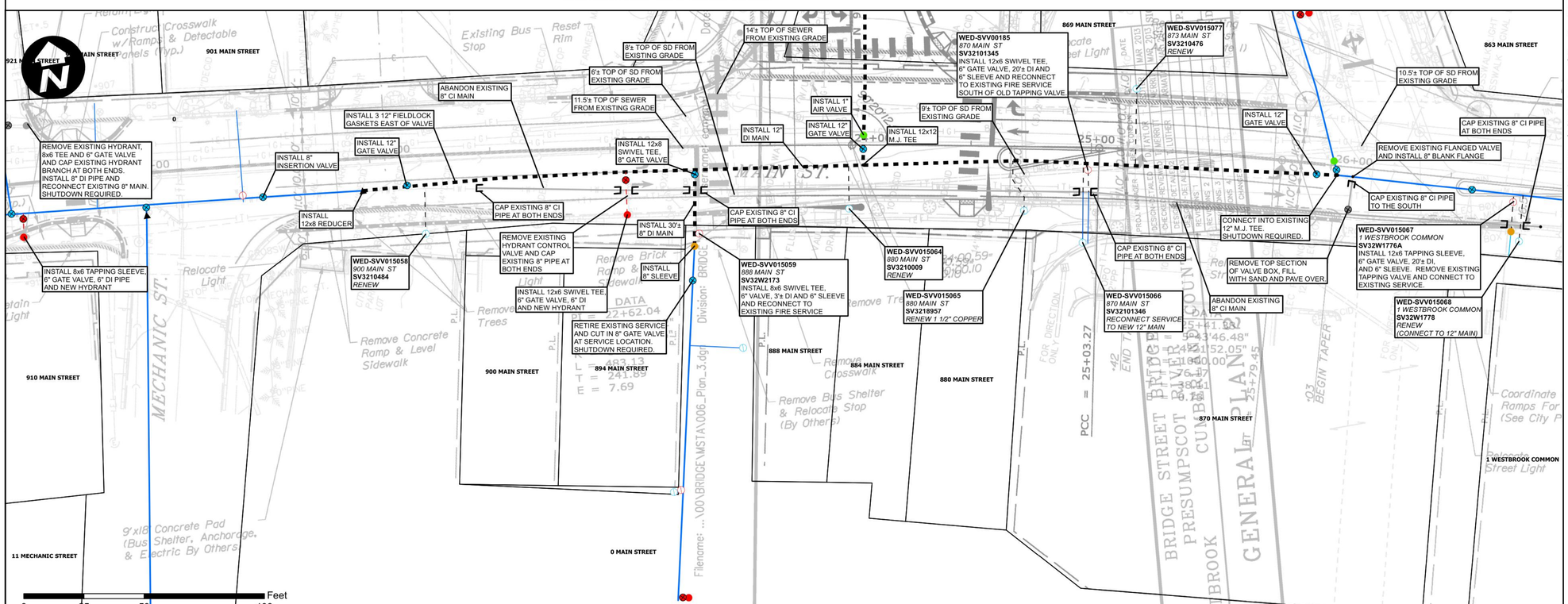

PROPOSED MAINS 1 " = 25 '

1. CONTRACTOR SHALL DISPOSE OF ALL EXCAVATED PIPING AND APPURTENANCES.

2. ALL MAINS AND SERVICES SHALL BE INSTALLED WITH 5.5' OF COVER MEASURED FROM EXISTING OR PROPOSED ROAD GRADE UNLESS SHOWN OTHERWISE.

3. THE PORTLAND WATER DISTRICT WILL NOTIFY CUSTOMERS FOR ALL WORK INVOLVING TEMPORARY SHUT DOWN OF SERVICE. CUSTOMERS MUST RECEIVE AT LEAST 48 HOURS NOTIFICATION PRIOR TO ANY SHUT DOWN. THE DISTRICT MUST RECEIVE NOTICE FROM THE CONTRACTOR OF THE SHUT DOWN AT LEAST 48 HOURS PRIOR TO CUSTOMER NOTIFICATION.

4. ALL DUCTILE IRON PIPE AND FITTINGS SHALL BE POLY-WRAPPED PER SPECIFICATIONS.

5. IF PROPERTIES REQUIRING A TEMPORARY WATER CONNECTION HAVE MALFUNCTIONING SILLCOCKS OR NO EXTERIOR PLUMBING, IT MAY BE NECESSARY TO EXCAVATE AND CONNECT INTO THE EXISTING SERVICE LINE BEHIND THE EXISTING SHUT-OFF VALVE TO PROVIDE TEMPORARY SERVICE.

6. PWD WILL PROVIDE A BACKFLOW DEVICE AND VALVE AT EACH HYDRANT CONNECTED TO A TEMPORARY MAIN.

7. INSTALL 4" TEMPORARY FIRE DEPT CONNECTION (TYP.), 4" GATE VALVE, 90° ELBOW, RISER PIPE, 90° ELBOW, AND 4-½" NPT STEAMER PORT CONNECTION WITH CAP. ALL JOINTS TO BE RESTRAINED. STEAMER PORT AND RISER TO BE ANCHORED TO THE GROUND. OUTLET TO BE BETWEEN 1' AND 2' OFF THE GROUND.

8. REMOVE ALL OLD PIPING NOT EXPLICITLY CALLED OUT FOR ABANDONMENT.

9. TEMPORARY WATER SYSTEM SHALL ONLY BE ACTIVE BETWEEN APRIL 15TH AND OCTOBER 15TH. ALL WATER MAIN, EITHER EXISTING OR NEWLY INSTALLED, MUST BE ACTIVE BETWEEN OCTOBER 16TH AND APRIL 14TH.

10. CONTRACTOR MUST ALLOW OWNER SUFFICIENT TIME TO TRANSFER WATER SERVICES FROM EXISTING WATER MAIN TO TEMPORARY WATER SERVICES INSTALLED BY CONTRACTOR AND TO TRANSFER SERVICE TO NEW WATER MAIN/SERVICE LINE UPON SUCCESSFUL TESTING OF SAMPLE FOR ABSENCE OF BACTERIA. THE CONTRACTOR SHALL NOT CLAIM ANY DELAY RELATED-COSTS OR TIME RELATED TO THIS WORK.

11. THE EXISTING 8" BRIDGE MAIN SHALL BE KEPT ACTIVE THROUGHOUT CONSTRUCTION OF NEW BRIDGE UNTIL FINAL CONNECTION AT STA 15+50.

12. REMOVE ALL GATE BOX TOP SECTIONS ON ABAONDONED GATE VALVES AND FILL WITH SAND.

13. RESTRAINED JOINT BRIDGE PIPING MUST BE EXACT 20' LAYING LENGTHS TO CONFORM TO THE HANGER SUPPORT LAYOUT.

14. INSTALL MJ CAPS ON ALL ABANDONED PIPE ENDS.

15. TEST AND ACTIVATE MAIN STREET WATER MAIN PRIOR TO THE NEW BRIDGE STREET MAIN.

16. ALL SERVICES SHALL BE RENEWED WITH 1" COPPER UNLESS OTHERWISE NOTED.

17. VERTICAL MEASUREMENTS FROM EXISTING GRADE TO SEWER AND STORM DRAINS ON MAIN STREET ARE APPROXIMATE.

18. VARIABLE MESSAGE BOARDS ARE TO BE PROVIDED AT EACH END OF MAIN STREET, IN PLACE AND ACTIVATED AT LEAST ONE WEEK BEFORE CONSTRUCTION STARTS, AND SHALL REMAIN ACTIVE UNTIL THE WORK IS COMPLETED.

LEGEND

- EXISTING WATER MAIN
- PROPOSED WATER MAIN
- TEMPORARY WATER MAIN
- PROPOSED/RENEWED SERVICE
- RECONNECT SERVICE

Project No. 242129

Portland Water District
ASSET MANAGEMENT AND PLANNING DEPARTMENT
225 DOUGLASS STREET, PORTLAND ME 04104
(207) 774-5961 EXT. 3041 • MEANS@PWD.ORG

STATE OF MAINE TIMOTHY J. MCALLEN 9385 LICENSED PROFESSIONAL ENGINEER

DATE	BY		SIGNATURE
			P.E. NUMBER 9385
			DATE 10/16/2013

MAIN ST / BRIDGE ST
WESTBROOK, ME

WATER MAIN REPLACEMENT

SHEET NUMBER

W1 OF 4

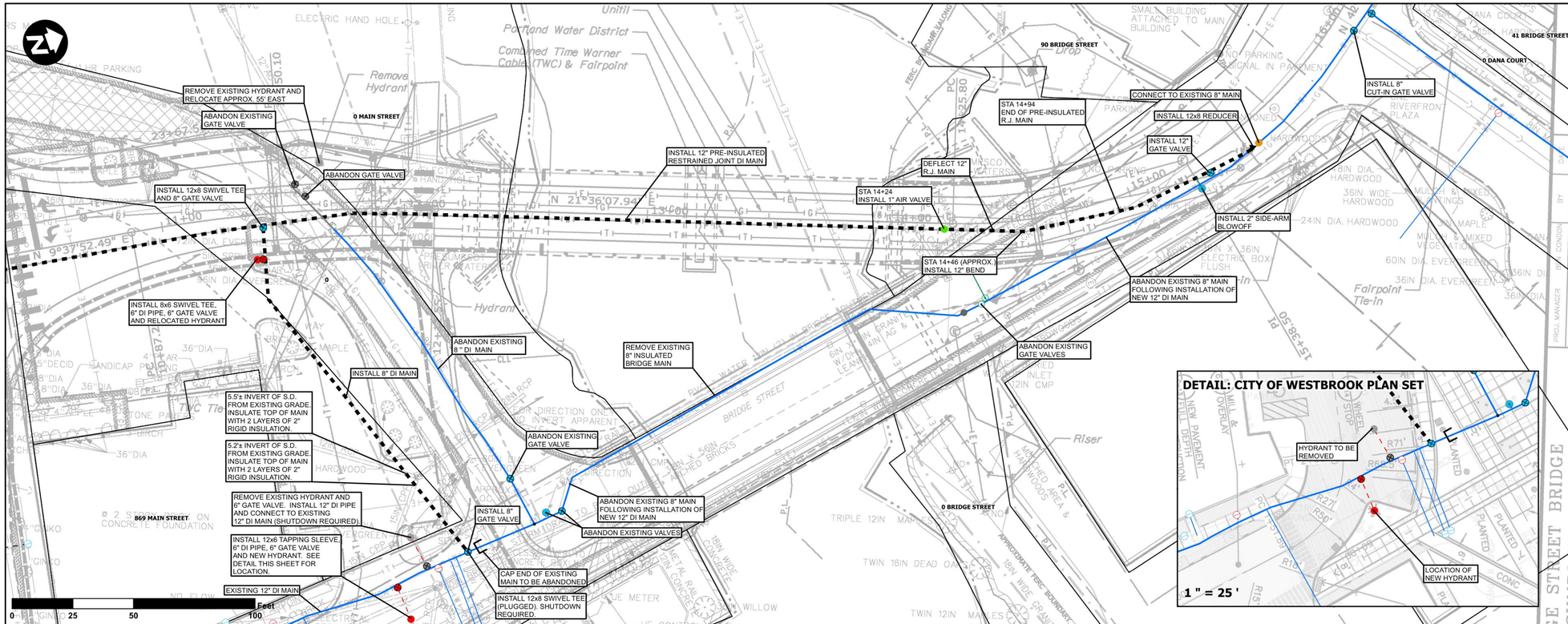

PROPOSED MAINS 1 " = 25 '

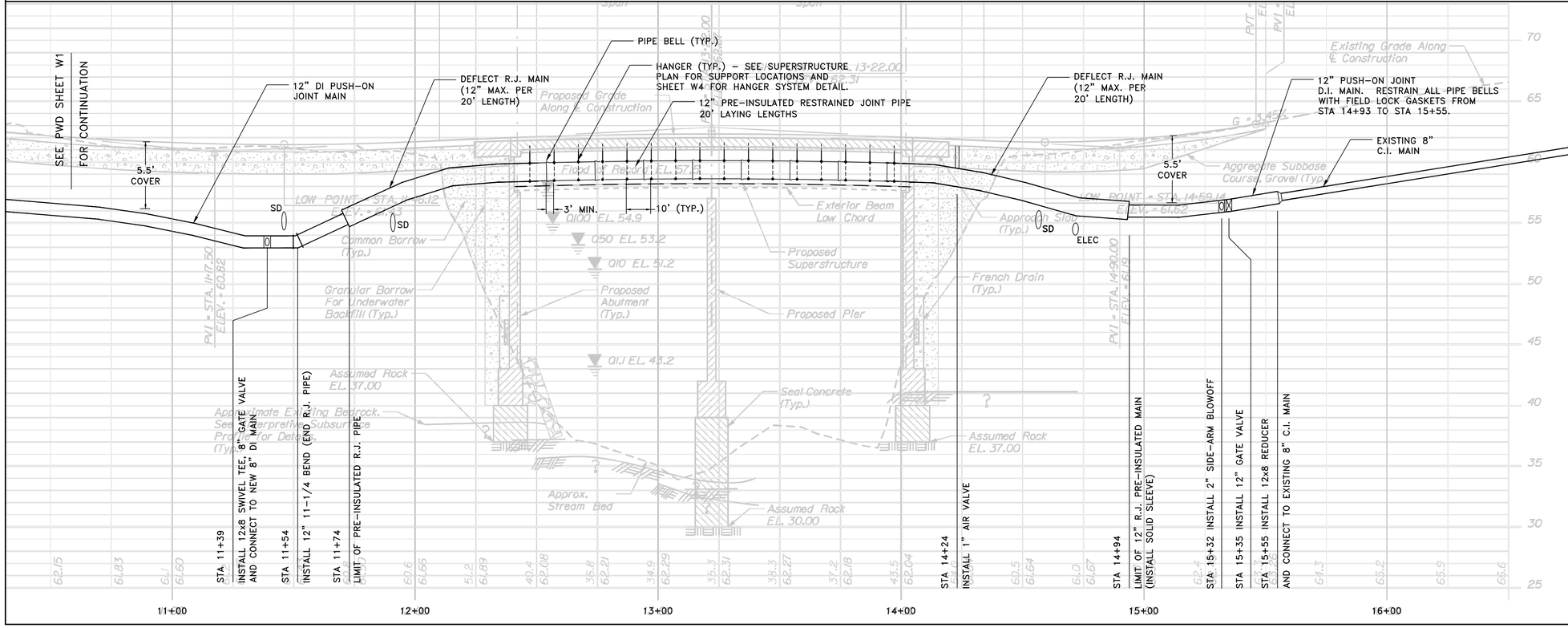

NOTES

1. CONTRACTOR SHALL DISPOSE OF ALL EXCAVATED PIPING AND APPURTENANCES.

2. ALL MAINS AND SERVICES SHALL BE INSTALLED WITH 5.5' OF COVER MEASURED FROM EXISTING OR PROPOSED ROAD GRADE UNLESS OTHERWISE SHOWN IN PROFILE.

3. THE PORTLAND WATER DISTRICT WILL NOTIFY CUSTOMERS FOR ALL WORK INVOLVING TEMPORARY SHUT DOWN OF SERVICE. CUSTOMERS MUST RECEIVE AT LEAST 48 HOURS NOTIFICATION PRIOR TO ANY SHUT DOWN. THE DISTRICT MUST RECEIVE NOTICE FROM THE CONTRACTOR OF THE SHUT DOWN AT LEAST 48 HOURS PRIOR TO CUSTOMER NOTIFICATION.

4. ALL DUCTILE IRON PIPE AND FITTINGS SHALL BE POLY-WRAPPED PER SPECIFICATIONS.

5. IF PROPERTIES REQUIRING A TEMPORARY WATER CONNECTION HAVE MALFUNCTIONING SILLCOCKS OR NO EXTERIOR PLUMBING, IT MAY BE NECESSARY TO EXCAVATE AND CONNECT INTO THE EXISTING SERVICE LINE BEHIND THE EXISTING SHUT-OFF VALVE TO PROVIDE TEMPORARY SERVICE.

6. PWD WILL PROVIDE A BACKFLOW DEVICE AND VALVE AT EACH HYDRANT CONNECTED TO A TEMPORARY MAIN.

7. INSTALL 4" TEMPORARY FIRE DEPT CONNECTION (TYP.), 4" GATE VALVE, 90° ELBOW, RISER PIPE, 90° ELBOW, AND 4-½" NPT STEAMER PORT CONNECTION WITH CAP. ALL JOINTS TO BE RESTRAINED. STEAMER PORT AND RISER TO BE ANCHORED TO THE GROUND. OUTLET TO BE BETWEEN 1' AND 2' OFF THE GROUND.

8. REMOVE ALL OLD PIPING NOT EXPLICITLY CALLED OUT FOR ABANDONMENT.

9. TEMPORARY WATER SYSTEM SHALL ONLY BE ACTIVE BETWEEN APRIL 15TH AND OCTOBER 15TH. ALL WATER MAIN, EITHER EXISTING OR NEWLY INSTALLED, MUST BE ACTIVE BETWEEN OCTOBER 16TH AND APRIL 14TH.

10. CONTRACTOR MUST ALLOW OWNER SUFFICIENT TIME TO TRANSFER WATER SERVICES FROM EXISTING WATER MAIN TO TEMPORARY WATER SERVICES INSTALLED BY CONTRACTOR AND TO TRANSFER SERVICE TO NEW WATER MAIN/SERVICE LINE UPON SUCCESSFUL TESTING OF SAMPLE FOR ABSENCE OF BACTERIA. THE CONTRACTOR SHALL NOT CLAIM ANY DELAY RELATED-COSTS OR TIME RELATED TO THIS WORK.

11. THE EXISTING 8" BRIDGE MAIN SHALL BE KEPT ACTIVE THROUGHOUT CONSTRUCTION OF NEW BRIDGE UNTIL FINAL CONNECTION AT STA 15+50.

12. REMOVE ALL GATE BOX TOP SECTIONS ON ABAONDONED GATE VALVES AND FILL WITH SAND.

13. RESTRAINED JOINT BRIDGE PIPING MUST BE EXACT 20' LAYING LENGTHS TO CONFORM TO THE HANGER SUPPORT LAYOUT.

14. INSTALL MJ CAPS ON ALL ABANDONED PIPE ENDS.

15. TEST AND ACTIVATE MAIN STREET WATER MAIN PRIOR TO THE NEW BRIDGE STREET MAIN.

16. ALL SERVICES SHALL BE RENEWED WITH 1" COPPER UNLESS OTHERWISE NOTED.

17. VERTICAL MEASUREMENTS FROM EXISTING GRADE TO SEWER AND STORM DRAINS ON MAIN STREET ARE APPROXIMATE.

18. VARIABLE MESSAGE BOARDS ARE TO BE PROVIDED AT EACH END OF MAIN STREET, IN PLACE AND ACTIVATED AT LEAST ONE WEEK BEFORE CONSTRUCTION STARTS, AND SHALL REMAIN ACTIVE UNTIL THE WORK IS COMPLETED.

LEGEND

- EXISTING WATER MAIN
- PROPOSED WATER MAIN
- TEMPORARY WATER MAIN
- PROPOSED/RENEWED SERVICE
- RECONNECT SERVICE

Project No. 242129

Portland Water District
ASSET MANAGEMENT AND PLANNING DEPARTMENT
225 DOUGLASS STREET, PORTLAND ME 04104
(207) 774-5961 EXT. 3041 • MEANS@PWD.ORG

STATE OF MAINE TIMOTHY J. MOULLIN 9385 PROFESSIONAL ENGINEER

	BY	DATE
PROJ MANAGER	CONDON	
DESIGN-DETAILED	TAYLOR	

SIGNATURE	
P.E. NUMBER	9385
DATE	10/16/2013

MAIN ST / BRIDGE ST
WESTBROOK, ME

WATER MAIN REPLACEMENT

SHEET NUMBER

W2 OF 4

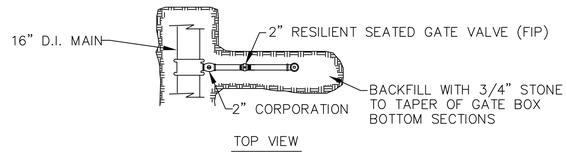

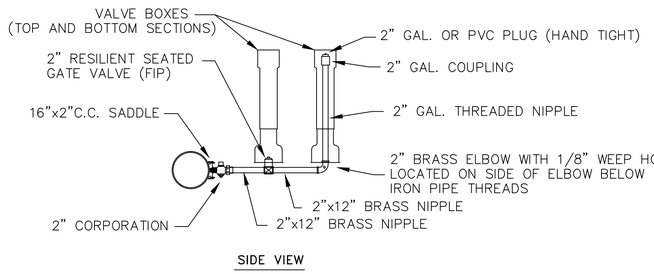

SIDE-ARM BLOW-OFF 4" & LARGER MAINS

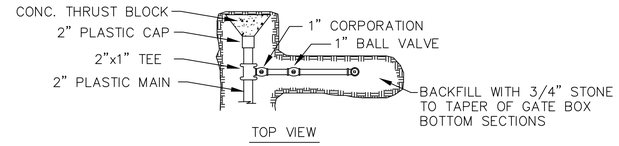

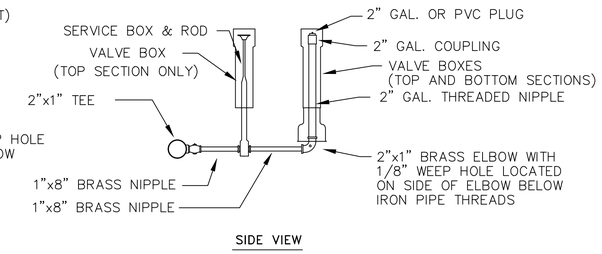

SIDE-ARM BLOW-OFF 2" MAIN

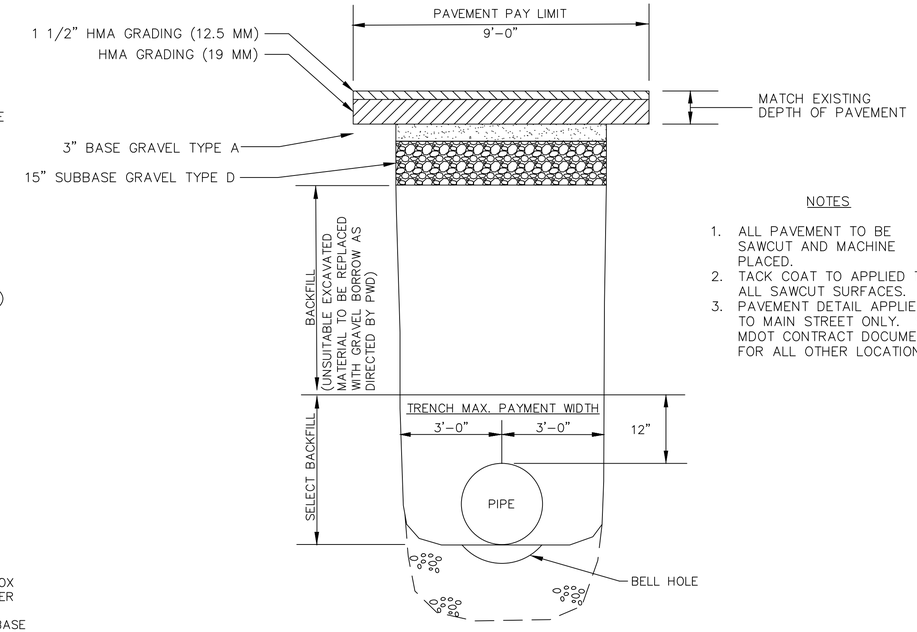

NOTES

1. ALL PAVEMENT TO BE SAWCUT AND MACHINE PLACED.
2. TACK COAT TO APPLIED TO ALL SAWCUT SURFACES.
3. PAVEMENT DETAIL APPLIES TO MAIN STREET ONLY. SEE MDOT CONTRACT DOCUMENTS FOR ALL OTHER LOCATIONS.

SECTION THRU EARTH TRENCH

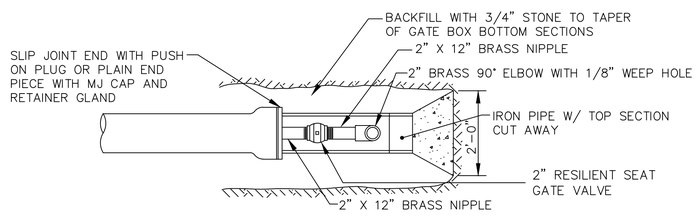

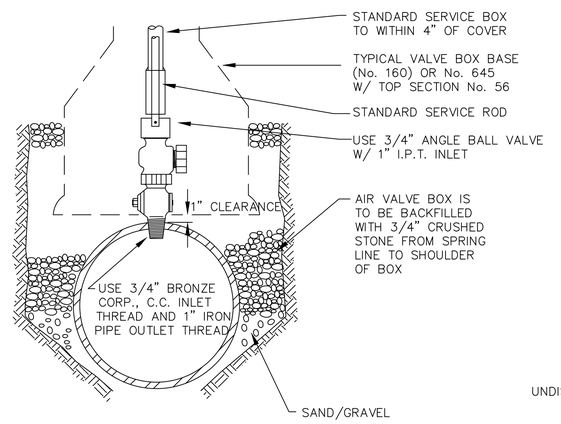

TYPICAL AIR VALVE (1")

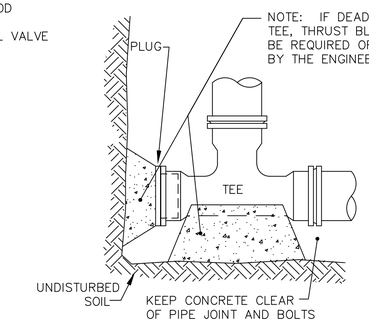

STANDARD TEE BLOCKING

FOR STATE ROADS

SETBACK SHALL CONFORM TO M.D.O.T. POLICY FOR ABOVE GROUND UTILITY LOCATIONS. FOR SPEED LIMITS >35MPH 6 1/2' FROM EDGE OF SHOULDER OR FACE OF CURB. FOR SPEED LIMITS <35MPH 3' FROM EDGE OF SHOULDER OR 1' FROM FACE OF CURB.

FOR CITY OR TOWN ROADS

CHECK WITH MUNICIPALITY FOR REQUIREMENTS

STANDARD 2" BLOW OFF

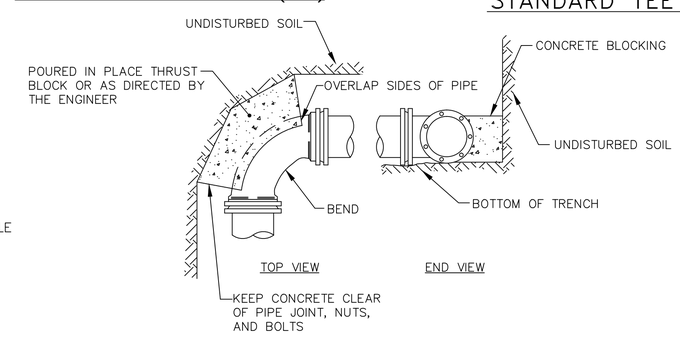

STANDARD BEND BLOCKING

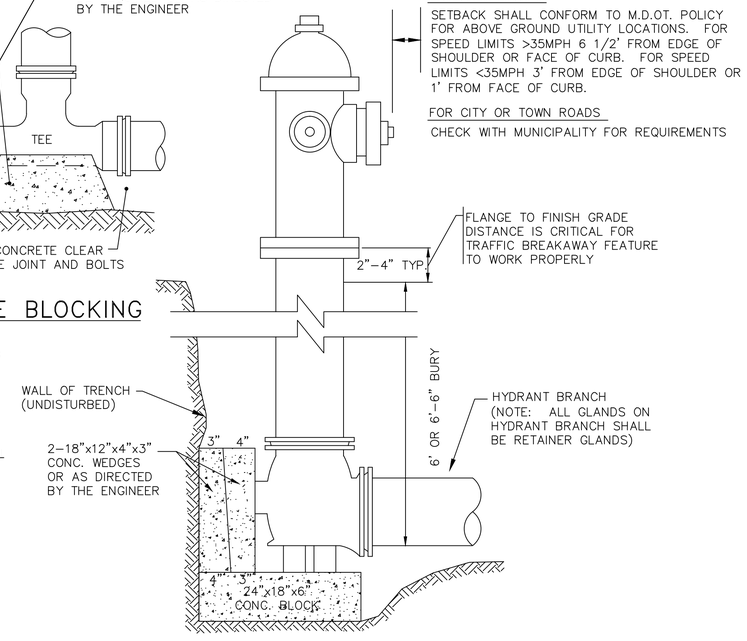

TYPICAL HYDRANT INSTALLATION DETAIL

Project No. 242129

Portland Water District
ASSET MANAGEMENT AND PLANNING DEPARTMENT
225 DOUGLASS STREET, PORTLAND ME 04104
(207) 774-5961 EXT. 3041 • MEANS@PWD.ORG

STATE OF MAINE TIMOTHY J. MOULLIN 9385 PROFESSIONAL ENGINEER

DATE	BY	
		SIGNATURE
		P.E. NUMBER 9385
		DATE 10/16/2013

MAIN ST / BRIDGE ST
WESTBROOK, ME

WATER MAIN REPLACEMENT

SHEET NUMBER

W3 OF 4

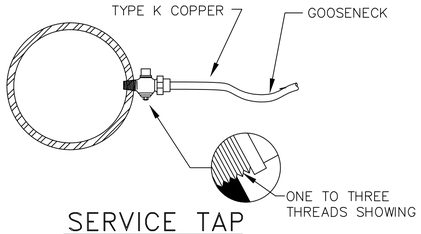

SERVICE TAP
(3/4" AND 1" C.C. THREAD)

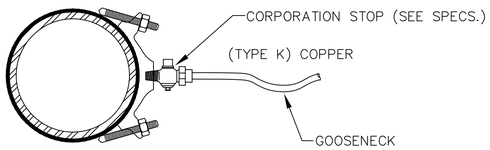

SERVICE SADDLE
(1-1/2" AND 2" C.C. THREAD)

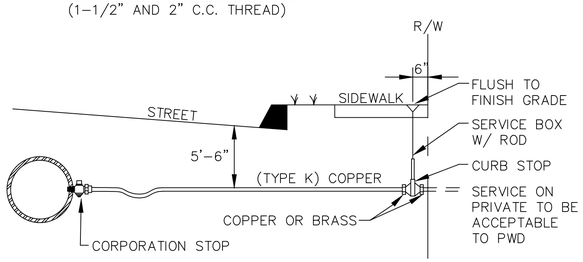

TYPICAL SERVICE CONNECTION

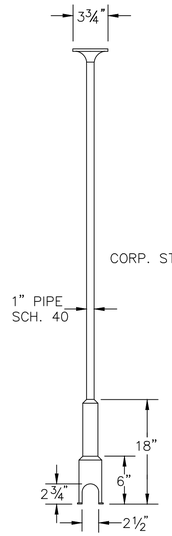

SERVICE BOX

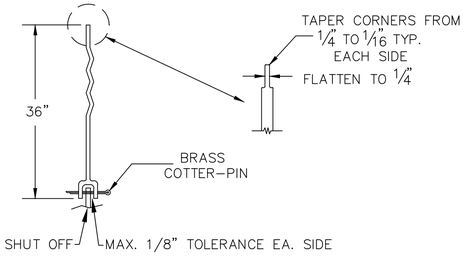

SERVICE ROD

COVER

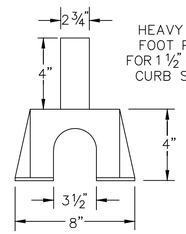

FOOT PIECE

NOTE : ANY EXTENSION OF SERVICE BOX REQUIRES:
1) 1" FEMALE IRON PIPE COUPLING
2) 1" THREADED PIPE

(THIS IS TO BE A NON-WELDED, TWO PIECE ARRANGEMENT. SLIP ON ADAPTERS ARE NOT PERMISSIBLE.)

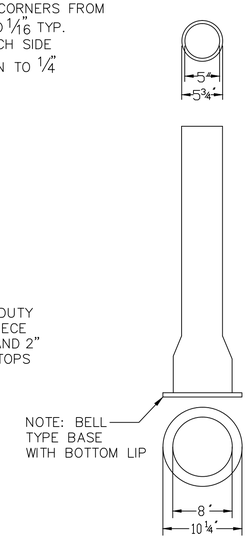

BASE SECTION NO. 645

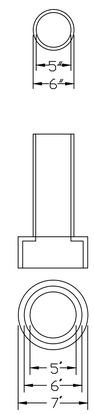

INTERMEDIATE SECTION NO.58

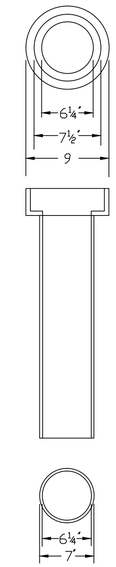

TOP SECTION NO.56

VALVE BOX & COVER

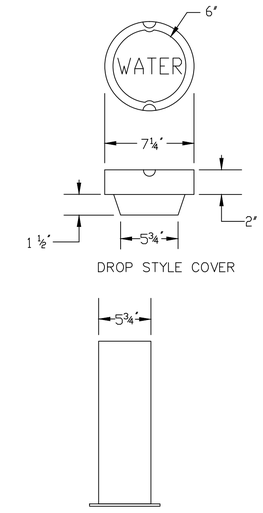

DROP STYLE COVER

(NUMBERS ARE FOR 5 1/4" BUFFALO VALVE BOXES) (BASE SECTION MAY BE USED AS INTERMEDIATE SECTION)

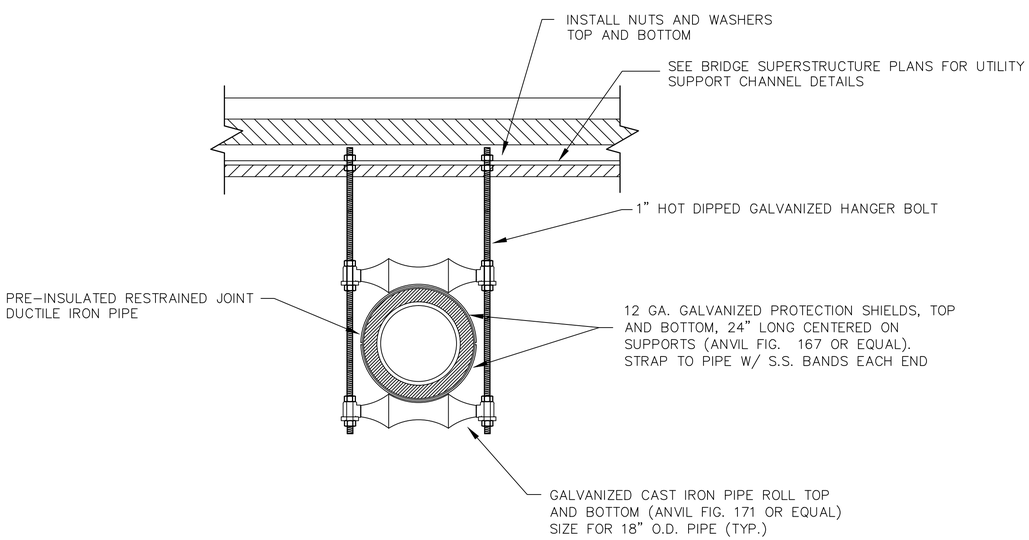

TYPICAL WATER MAIN SUPPORT
1" = 1'-0"

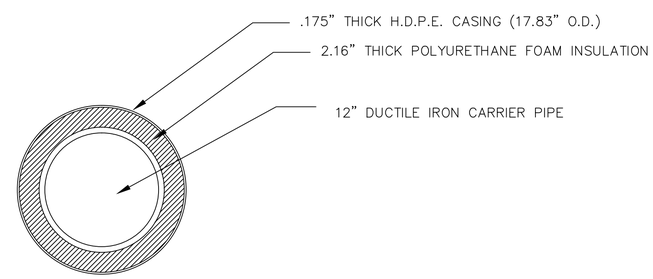

PRE-INSULATED WATER MAIN DETAIL
NTS

Project No. 242129

Portland Water District
ASSET MANAGEMENT AND PLANNING DEPARTMENT
225 DOUGLASS STREET, PORTLAND ME 04104
(207) 774-5961 EXT. 3041 • MEANS@PWD.ORG

STATE OF MAINE
TIMOTHY J. MOULLIN
9385
PROFESSIONAL ENGINEER

DATE	BY	
		SIGNATURE
		P.E. NUMBER 9385
		DATE 10/16/2013

MAIN ST / BRIDGE ST
WESTBROOK, ME

WATER MAIN REPLACEMENT

SHEET NUMBER

W4 OF 4

Unitil

Northern Utilities, Inc.

BRIDGE STREET BRIDGE CROSSING

BRIDGE STREET BRIDGE
OVER PRESUMPSCOT RIVER
WESTBROOK, MAINE

INDEX OF SHEETS

NUMBER	NAME	TITLE
1	T01	COVER SHEET
2	C01	SITE MAP
3	Y01	PROFILE
4	C02	DETAILS SHEET 1 OF 3
5	C03	DETAILS SHEET 2 OF 3
6	C04	DETAILS SHEET 3 OF 3
7	C05	BILL OF MATERIALS

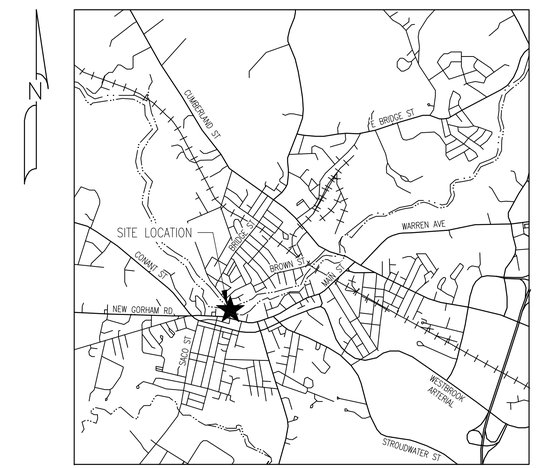

LOCUS
SCALE: NTS

ISSUED FOR CONSTRUCTION

	ISSUE STATUS	DATE	REVIEWED	CHECKED	APPROVED
	25% SUBMISSION				
	50% SUBMISSION				
	75% SUBMISSION				
	90% SUBMISSION	07/02/13			
	ISSUED FOR BID				
■	ISSUED FOR CONSTRUCTION	08/14/13			
	AS CONSTRUCTED				

FILE NAME: C00.DWG	SIZE	SHEET	REV
PLOT DATE: 09/27/2013 10:53 AM	22X34	T01	F
	SHEET 1 OF 7		

PROCESS PIPELINE SERVICES
1600 Providence Highway
Walpole, MA 02081
781.829.0524
processpipelineservices.com

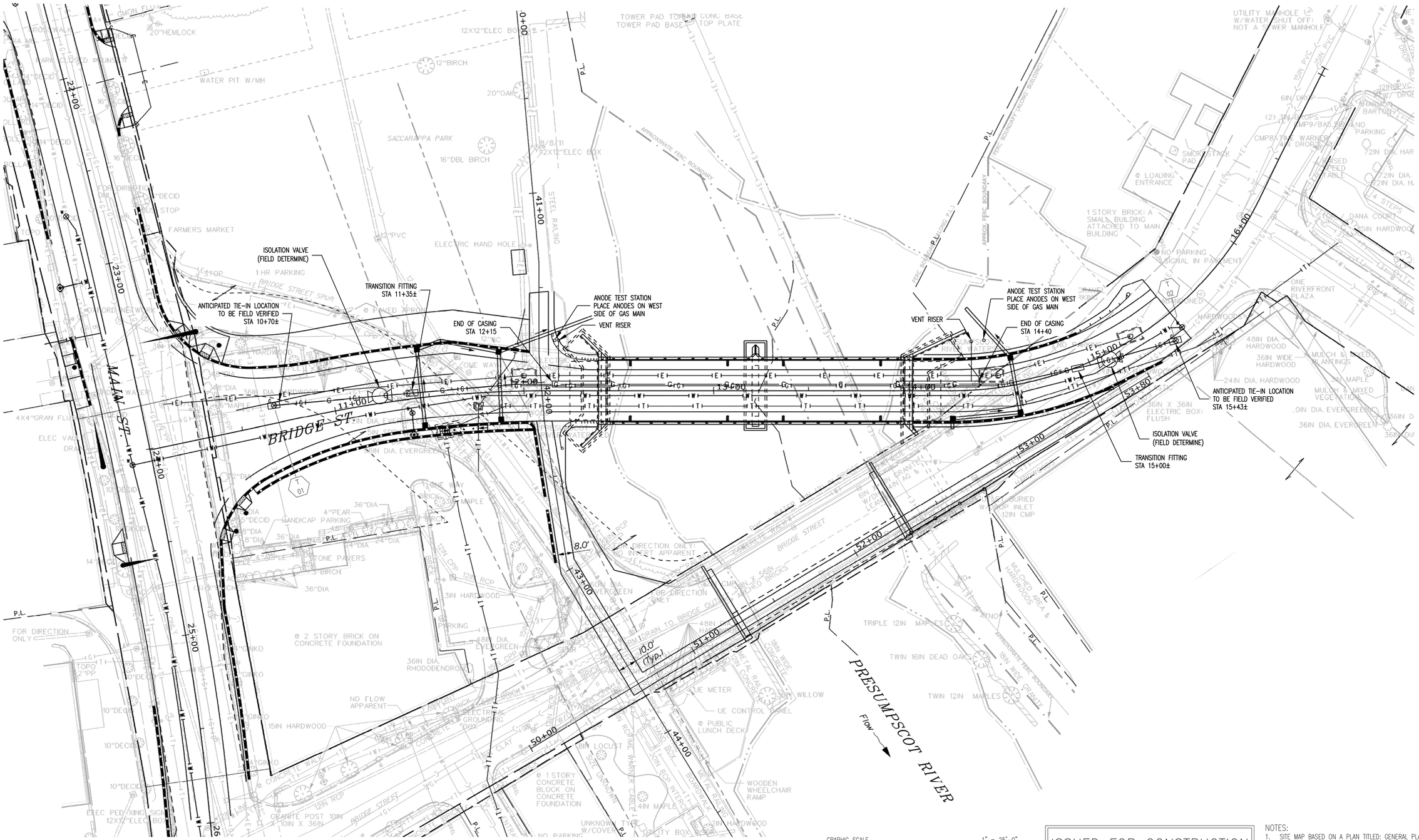

GRAPHIC SCALE 1" = 25'-0"
25' 12.5' 0 25' 50' 75'

ISSUED FOR CONSTRUCTION

NOTES:
1. SITE MAP BASED ON A PLAN TITLED: GENERAL PLAN 1; PROJECT: BRIDGE STREET BRIDGE, PRESUMPSCOT RIVER; LOCATED: WESTBROOK, CUMBERLAND COUNTY; CREATED FOR: STATE OF MAINE, DEPARTMENT OF TRANSPORTATION; DATED: MAR 2013; SHEET NUMBER: 2 OF 34.

REV	BY	DATE	DESCRIPTION	DWG NO.	REFERENCE DRAWINGS

SEAL AND SIGNATURE

PRJ MANAGER: MARK D. WOOD
PRJ ENGINEER: STEPHEN M. READE
PRJ NAME: BRIDGE STREET BRIDGE CROSSING
PRJ NUMBER: 5106
PRJ MILESTONE: ISSUED FOR CONSTRUCTION
PRJ PHASE: ISSUED FOR CONSTRUCTION

DESIGNED BY:	MDW	08/14/13
DRAFTED BY:	RPG	08/14/13
CHECKED BY:	SMR	08/14/13
APPROVED BY:	MDW	08/14/13

CLIENT INFORMATION
Unitil
Northern Utilities, Inc.

DESIGN MANAGER: XXXX
DESIGN ENGINEER: XXXX
ACTIVATION ORDER:
REVIEWED BY:
CHECKED BY:
APPROVED BY:

SHEET TITLE
SITE MAP

PROJECT NAME
BRIDGE STREET BRIDGE CROSSING

PROJECT LOCATION
BRIDGE STREET BRIDGE
OVER PRESUMPSCOT RIVER
WESTBROOK, MAINE

PROCESS PIPELINE SERVICES
1600 Providence Highway
Walpole, MA 02081
781.829.0524
processpipelineservices.com

FILE NAME: C00.DWG
PLOT DATE: 09/27/2013 10:53 AM
SCALE: 1" = 25'-0"

SIZE	SHEET	REV
22X34	C01	F

SHEET 2 OF 7

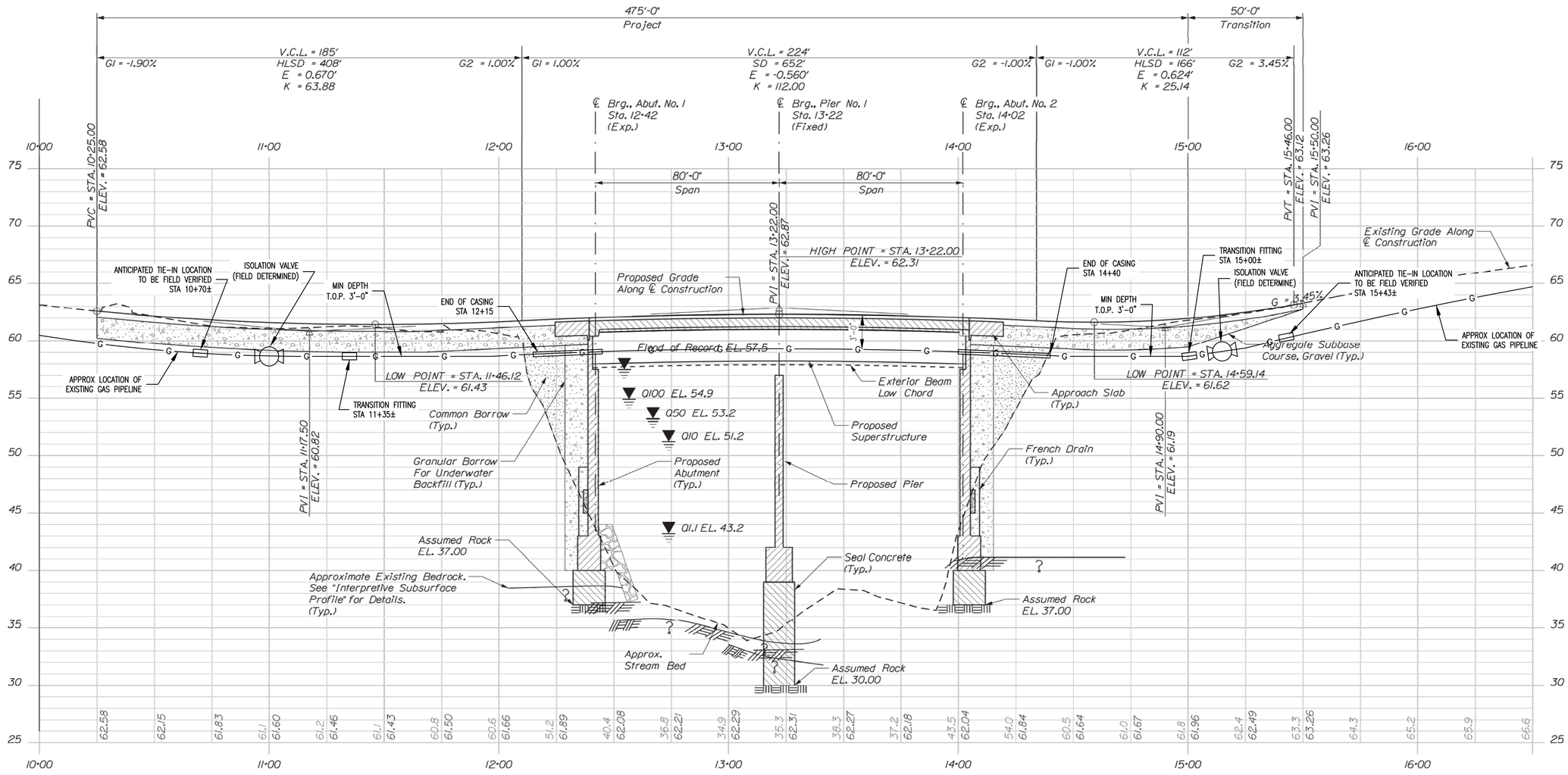

PROFILE

Horiz. 25 0 25 50

Vert. 5 0 5 10

ISSUED FOR CONSTRUCTION

NOTES:

1. PROFILE BASED ON A PLAN TITLED: BRIDGE STREET PROFILE; PROJECT: BRIDGE STREET BRIDGE, PRESUMPSCOT RIVER; LOCATED: WESTBROOK, CUMBERLAND COUNTY; CREATED FOR: STATE OF MAINE, DEPARTMENT OF TRANSPORTATION; DATED: MAR 2013; SHEET NUMBER: 5 OF 34.

REV	BY	DATE	DESCRIPTION	DWG NO.	REFERENCE DRAWINGS

SEAL AND SIGNATURE

PRJ MANAGER: MARK D. WOOD		
PRJ ENGINEER: STEPHEN M. READE		
PRJ NAME: BRIDGE STREET BRIDGE CROSSING		
PRJ NUMBER: 5106		
PRJ MILESTONE: ISSUED FOR CONSTRUCTION		
PRJ PHASE: ISSUED FOR CONSTRUCTION		
DESIGNED BY:	MDW	08/14/13
DRAFTED BY:	RPG	08/14/13
CHECKED BY:	SMR	08/14/13
APPROVED BY:	MDW	08/14/13

CLIENT INFORMATION

Unitil
Northern Utilities, Inc.

DESIGN MANAGER: XXXX	REVIEWED BY:		
DESIGN ENGINEER: XXXX	CHECKED BY:		
ACTIVATION ORDER:	APPROVED BY:		

SHEET TITLE: PROFILE

PROJECT NAME: BRIDGE STREET BRIDGE CROSSING

PROJECT LOCATION: BRIDGE STREET BRIDGE OVER PRESUMPSCOT RIVER WESTBROOK, MAINE

PROCESS PIPELINE SERVICES

1600 Providence Highway
Walpole, MA 02081
781.829.0524
processpipelineservices.com

FILE NAME: C00.DWG
PLOT DATE: 09/27/2013 10:53 AM
SCALE: 1" = 25'-0"

SIZE	SHEET	REV
22X34	Y01	F

SHEET 3 OF 7

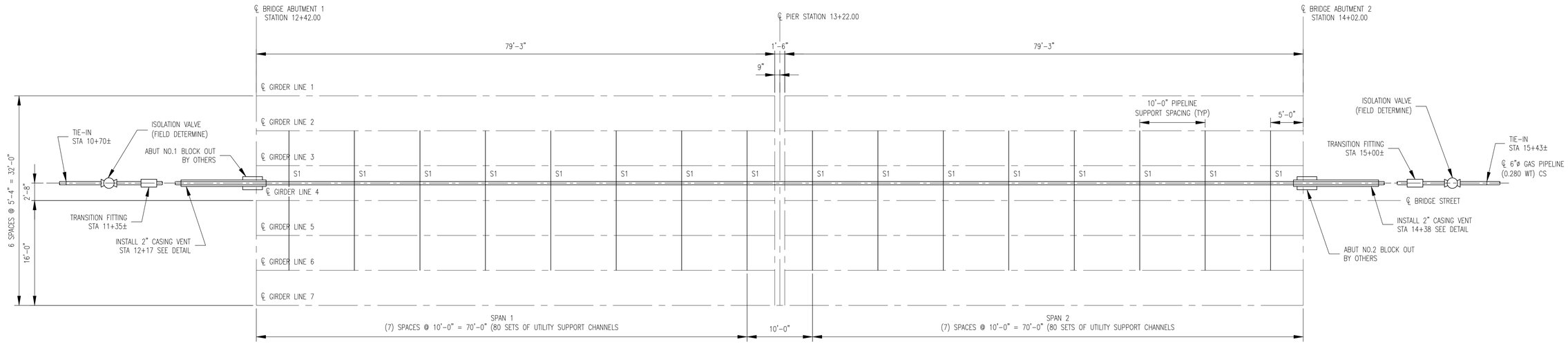

PLAN VIEW
SCALE: 1/8" = 1'-0"

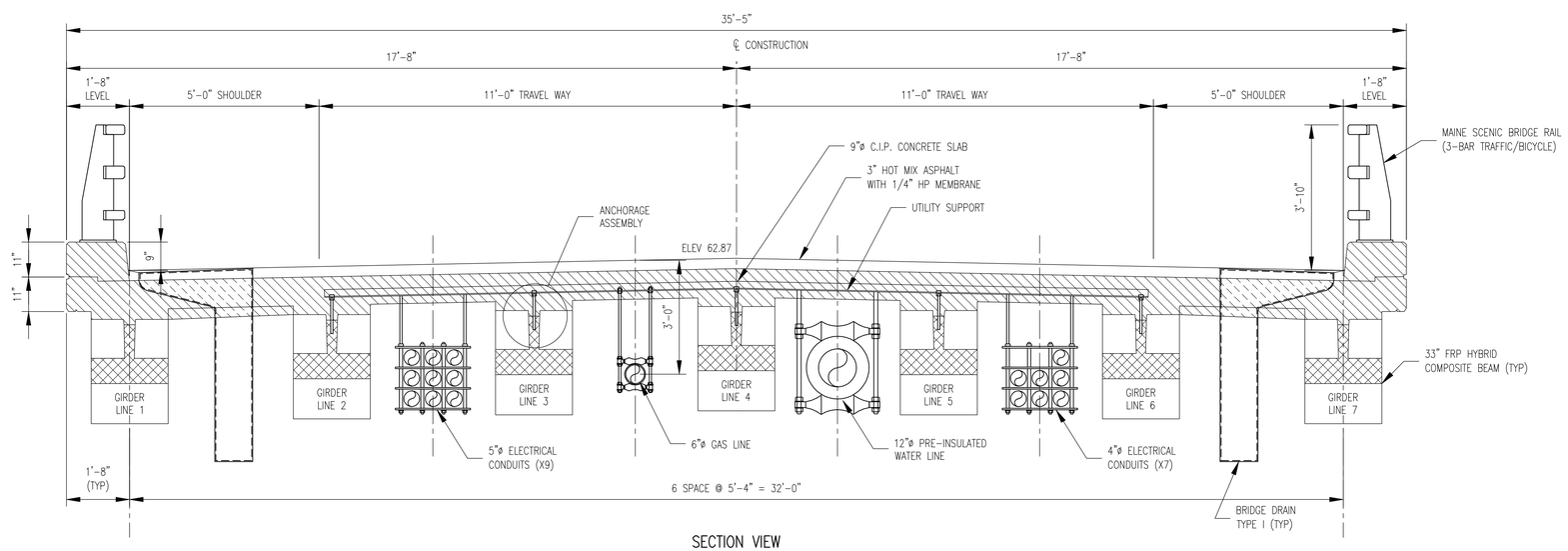

SECTION VIEW
SCALE: 1/2" = 1'-0"

ISSUED FOR CONSTRUCTION

REV	BY	DATE	DESCRIPTION	DWG NO.	REFERENCE DRAWINGS	SEAL AND SIGNATURE

PRJ MANAGER: MARK D. WOOD		
PRJ ENGINEER: STEPHEN M. READE		
PRJ NAME: BRIDGE STREET BRIDGE CROSSING		
PRJ NUMBER: 5106		
PRJ MILESTONE: ISSUED FOR CONSTRUCTION		
PRJ PHASE: ISSUED FOR CONSTRUCTION		
DESIGNED BY:	MDW	08/14/13
DRAFTED BY:	RPC	08/14/13
CHECKED BY:	SMR	08/14/13
APPROVED BY:	MDW	08/14/13

CLIENT INFORMATION
Unitil
Northern Utilities, Inc.

DESIGN MANAGER: XXXX	REVIEWED BY:
DESIGN ENGINEER: XXXX	CHECKED BY:
ACTIVATION ORDER:	APPROVED BY:

SHEET TITLE
DETAILS SHEET 1 OF 3

PROJECT NAME
BRIDGE STREET BRIDGE CROSSING

PROJECT LOCATION
BRIDGE STREET BRIDGE
OVER PRESUMPSCOT RIVER
WESTBROOK, MAINE

PROCESS PIPELINE SERVICES
1600 Providence Highway
Walpole, MA 02081
781.829.0524
processpipelineservices.com

FILE NAME: C00.DWG
PLOT DATE: 09/27/2013 10:53 AM
SCALE: AS SHOWN

SIZE	SHEET	REV
22X34	C02	F

SHEET 4 OF 7

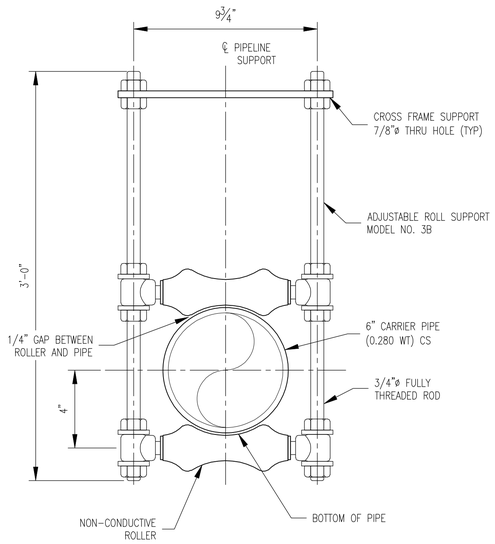

PIPELINE SUPPORT (S1)
SCALE: 3" = 1'-0"

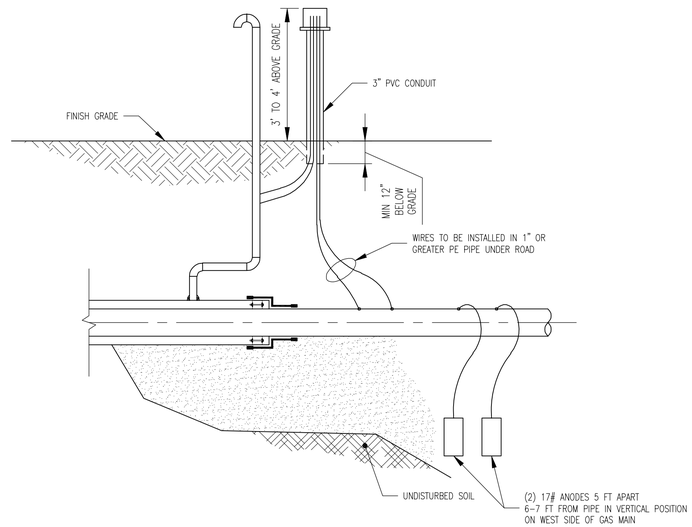

ANODE TEST STATION
SCALE: 1/2" = 1'-0"

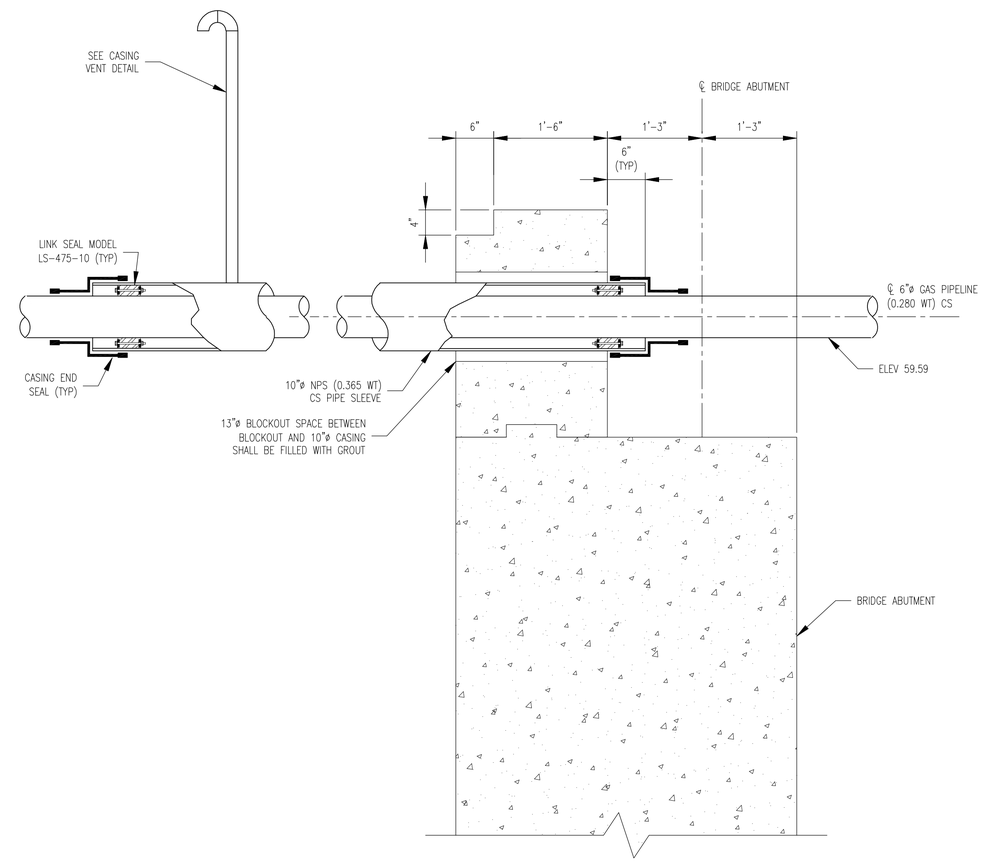

ABUTMENT PENETRATION DETAIL
SCALE: 1" = 1'-0"
(TYP X 2)

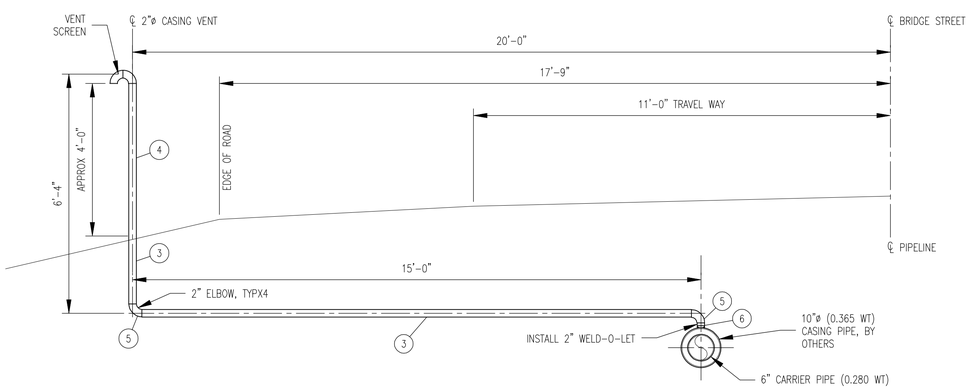

CASING VENT DETAIL
SCALE: 1/2" = 1'-0"
(TYP X 2)

ISSUED FOR CONSTRUCTION

REV	BY	DATE	DESCRIPTION	DWG NO.	REFERENCE DRAWINGS

SEAL AND SIGNATURE

PRJ MANAGER: MARK D. WOOD
PRJ ENGINEER: STEPHEN M. READE
PRJ NAME: BRIDGE STREET BRIDGE CROSSING
PRJ NUMBER: 5106
PRJ MILESTONE: ISSUED FOR CONSTRUCTION
PRJ PHASE: ISSUED FOR CONSTRUCTION

DESIGNED BY:	MDW	08/14/13
DRAFTED BY:	RPG	08/14/13
CHECKED BY:	SMR	08/14/13
APPROVED BY:	MDW	08/14/13

CLIENT INFORMATION
Unitil
Northern Utilities, Inc.

DESIGN MANAGER: XXXX
DESIGN ENGINEER: XXXX
ACTIVATION ORDER:
REVIEWED BY:
CHECKED BY:
APPROVED BY:

SHEET TITLE
DETAILS SHEET 2 OF 3

PROJECT NAME
BRIDGE STREET BRIDGE CROSSING

PROJECT LOCATION
BRIDGE STREET BRIDGE
OVER PRESUMPSCOT RIVER
WESTBROOK, MAINE

PROCESS PIPELINE SERVICES
1600 Providence Highway
Walpole, MA 02081
781.829.0524
processpipelineservices.com

FILE NAME: C00.DWG
PLOT DATE: 09/27/2013 10:53 AM
SCALE: AS SHOWN

SIZE	SHEET	REV
22X34	C03	F

SHEET 5 OF 7

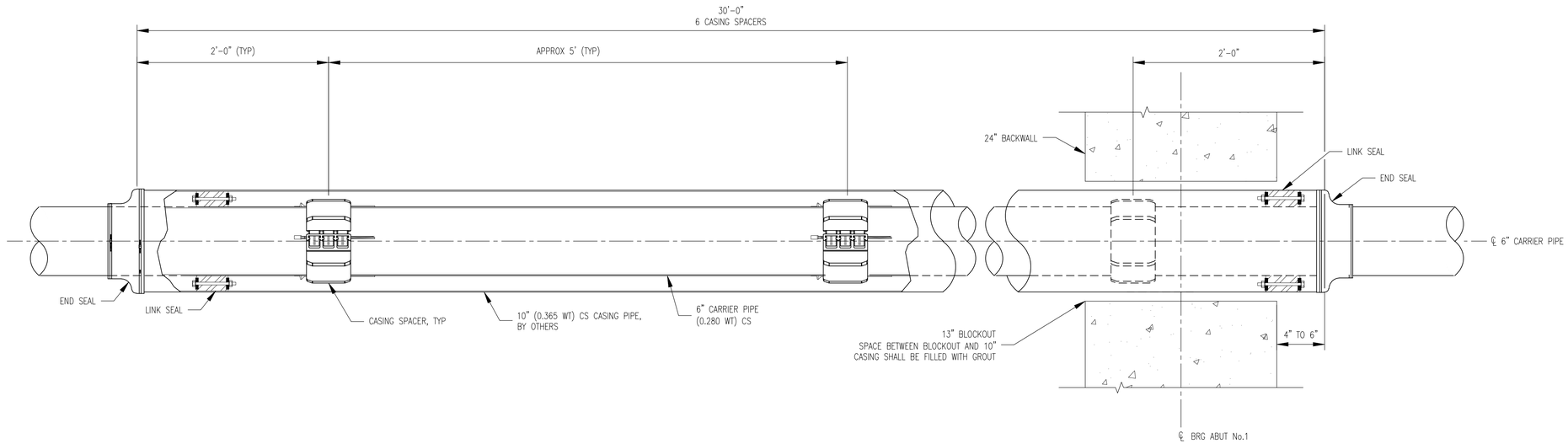

BRIDGE ABUT No. 1
CASING SPACER DETAIL (PLAN VIEW)
SCALE: 1-1/2" = 1'-0"

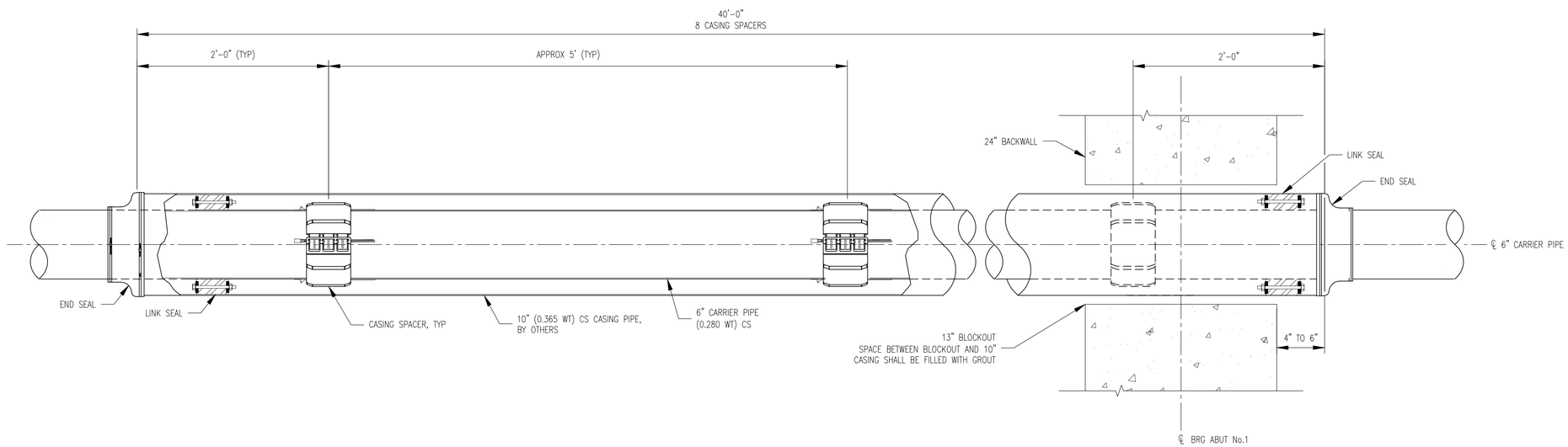

BRIDGE ABUT No. 2
CASING SPACER DETAIL (PLAN VIEW)
SCALE: 1-1/2" = 1'-0"

CASING SPACER NOTES:

1. CASING SPACERS
   1.1. THE CONTRACTOR SHALL FURNISH AND BOLTLESS CASING SPACERS ON THE CARRIER PIPE. CASING SPACERS SHALL BE SPACED NO LESS THEN FIVE (5) FEET APART WITH A MAXIMUM SPACING OF EIGHT (8) FEET BETWEEN ANY TWO CASING SPACERS. TWO (2) CASING SPACERS SHALL BE INSTALLED WITHIN TWO (2) FEET AT EACH END OF THE CARRIER PIPE. WOOD SKIDS ARE NOT AN ACCEPTABLE METHOD OF SUPPORTING THE CARRIER PIPE.
   1.2. THE CASING SPACERS SHALL BE THE PSI RANGER II CASING SPACERS, MODEL MINI AS MANUFACTURED BY PIPELINE SEAL AND INSULATOR, INC., HOUSTON, TEXAS.
2. END SEALS
   2.1. AFTER INSERTION OF THE CARRIER PIPE INTO THE CASING, THE ENDS OF THE CASING SHALL BE CLOSED BY INSTALLING 1/8" THICK SYNTHETIC RUBBER END SEALS EQUAL TO THE PSI MODEL "C" END SEAL AS MANUFACTURED BY PIPELINE SEAL AND INSULATOR, INC., HOUSTON, TEXAS.

ISSUED FOR CONSTRUCTION

REV	BY	DATE	DESCRIPTION	DWG NO.	REFERENCE DRAWINGS

SEAL AND SIGNATURE

PRJ MANAGER: MARK D. WOOD		
PRJ ENGINEER: STEPHEN M. READE		
PRJ NAME: BRIDGE STREET BRIDGE CROSSING		
PRJ NUMBER: 5106		
PRJ MILESTONE: ISSUED FOR CONSTRUCTION		
PRJ PHASE: ISSUED FOR CONSTRUCTION		
DESIGNED BY:	MDW	08/14/13
DRAFTED BY:	RPG	08/14/13
CHECKED BY:	SMR	08/14/13
APPROVED BY:	MDW	08/14/13

CLIENT INFORMATION: Unitil Northern Utilities, Inc.

DESIGN MANAGER: XXXX	REVIEWED BY:
DESIGN ENGINEER: XXXX	CHECKED BY:
ACTIVATION ORDER:	APPROVED BY:

SHEET TITLE: DETAILS SHEET 3 OF 3

PROJECT NAME: BRIDGE STREET BRIDGE CROSSING

PROJECT LOCATION: BRIDGE STREET BRIDGE OVER PRESUMPSCOT RIVER WESTBROOK, MAINE

PROCESS PIPELINE SERVICES
1600 Providence Highway
Walpole, MA 02081
781.829.0524
processpipelineservices.com

FILE NAME: C00.DWG
PLOT DATE: 09/27/2013 10:53 AM
SCALE: AS SHOWN

SIZE	SHEET	REV
22X34	C04	F

SHEET 6 OF 7

BILL OF MATERIALS

ITEM	QTY	UOM	SIZE (IN)	DESCRIPTION	RATING	THICKNESS (IN)	STANDARD	MATERIAL SPEC	MANUFACTURER	HEAT NO/SERIAL NO	NOTES
1	415	LF	6	PIPE	SCHD 80	0.432	–	API 5L, GR B			PRITEC 1080 COATED – UNITIL COATING SPECIFICATIONS
2	75	LF	10	PIPE	SCHD 40	0.365	–	API 5L, GR B			PRITEC 1040 COATED – UNITIL COATING SPECIFICATIONS
3	60	LF	2	PIPE	SCHD 40	0.154	–	API 5L, GR B			PRITEC 1040 COATED – UNITIL COATING SPECIFICATIONS
4	5	LF	2	PIPE	SCHD 40	0.154	–	API 5L, GR B			ABOVE GROUND – UNITIL SPECIFICATION OEP-13
5	8	EA	2	ELB, 90 DEG, LR	–	0.154	ANSI B16.9	ASTM A-234, WPB			
6	2	EA	10 X 2	WELD-O-LET	3000	0.375	ANSI B16.11	ASTM A-105			
7	16	EA	6	ADJUSTABLE ROLLER GUIDE SUPPORT	–	–	–	–	LB&A, INC		MODEL: 3B
8	–	–	–	NOT USED	–	–	–	–			
9	14	EA	6	CASING SPACER	–	–	–	–	PSI, INC		MODEL: PE
10	4	EA	6 X 10	END SEAL	–	–	–	–	PSI, INC		MODEL: C
11	4	EA	10	LINK SEAL	–	–	–	–	PSI, INC		MODEL: LS-475-C-10
12	2	EA	2	VENT SCREEN	–	–	–	–			

ISSUED FOR CONSTRUCTION

NOTES:
1. ALL MATERIALS LISTED IN BOM ARE SUPPLIED BY UNITIL.

REV	BY	DATE	DESCRIPTION	DWG NO.	REFERENCE DRAWINGS	SEAL AND SIGNATURE

PRJ MANAGER: MARK D. WOOD
PRJ ENGINEER: STEPHEN M. READE
PRJ NAME: BRIDGE STREET BRIDGE CROSSING
PRJ NUMBER: 5106
PRJ MILESTONE: ISSUED FOR CONSTRUCTION
PRJ PHASE: ISSUED FOR CONSTRUCTION

DESIGNED BY:	MDW	08/14/13
DRAFTED BY:	RPG	08/14/13
CHECKED BY:	SMR	08/14/13
APPROVED BY:	MDW	08/14/13

CLIENT INFORMATION
Unitil
Northern Utilities, Inc.

DESIGN MANAGER: XXXX
DESIGN ENGINEER: XXXX
ACTIVATION ORDER:
REVIEWED BY:
CHECKED BY:
APPROVED BY:

SHEET TITLE
BILL OF MATERIALS

PROJECT NAME
BRIDGE STREET BRIDGE CROSSING

PROJECT LOCATION
BRIDGE STREET BRIDGE
OVER PRESUMPSCOT RIVER
WESTBROOK, MAINE

PROCESS PIPELINE SERVICES
1600 Providence Highway
Walpole, MA 02081
781.829.0524
processpipelineservices.com

FILE NAME: C00.DWG
PLOT DATE: 09/27/2013 10:53 AM
SCALE: AS SHOWN

SIZE	SHEET	REV
22X34	C05	F

SHEET 7 OF 7

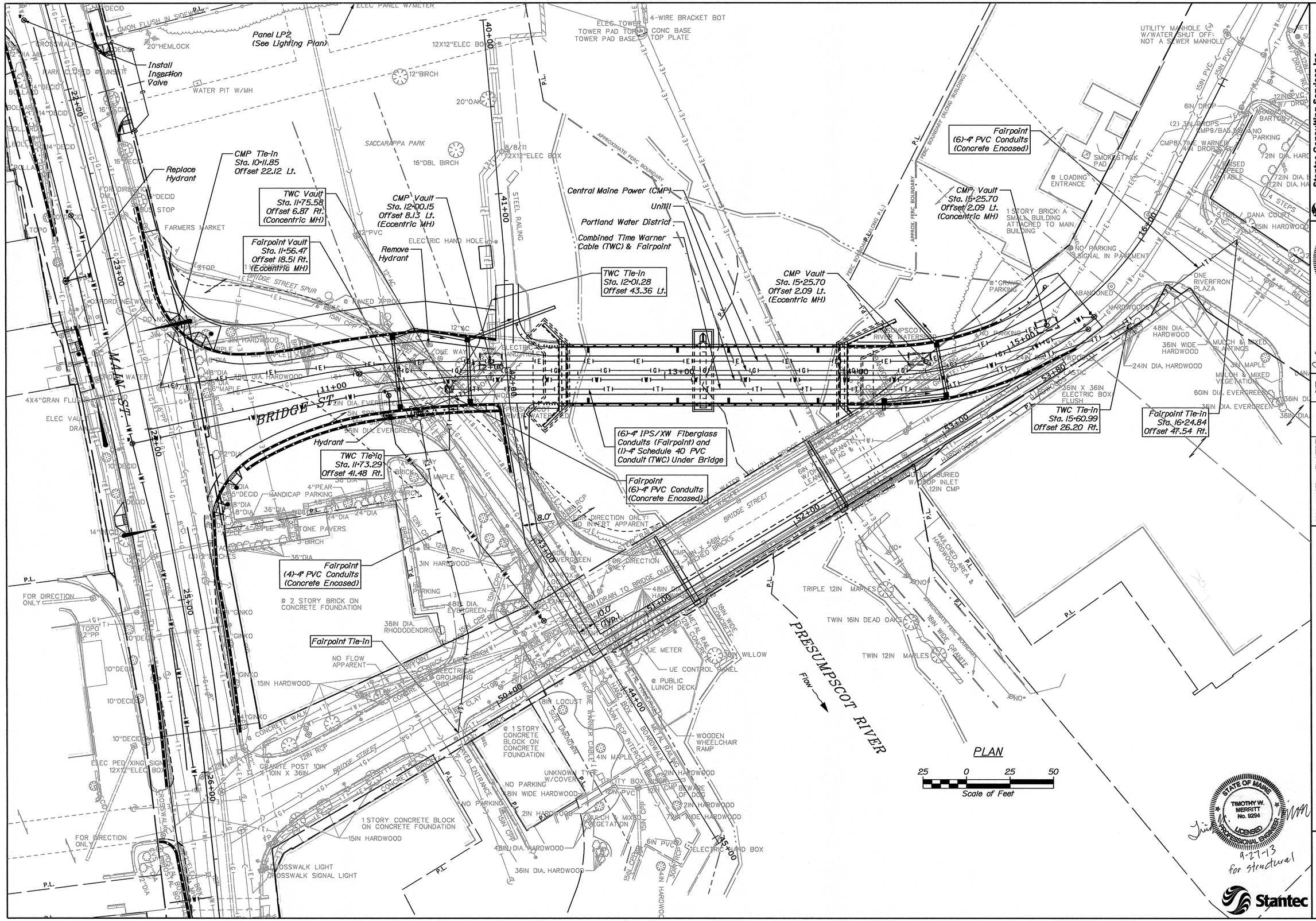

Stantec Consulting Services Inc.
482 Payne Road, Scarborough ME 04074
Tel. 207.883.3355 Fax 207.883.3376 www.stantec.com

Stantec Project No. 198801015

Scale AS NOTED

TIME WARNER CABLE
FAIRPOINT CONDUITS

STATE OF MAINE
RICHARD C. HENDEE, JR.
No. 7674
LICENSED
PROFESSIONAL ENGINEER

SIGNATURE #7674
P.E. NUMBER
9-27-2013
DATE

		DATE
PROJ. MANAGER	TIM MERRITT	
CHECKED BY	D. HENDEE	9-25-13
DESIGNED BY	R. VACHON	9-25-13
DRAWN BY	D. GODFREY	9-25-13

WESTBROOK – BRIDGE STREET BRIDGE
OVER PRESUMPSCOT RIVER

TIME WARNER CABLE
FAIRPOINT CONDUITS

STATE OF MAINE
TIMOTHY W. MERRITT
No. 9294
LICENSED
PROFESSIONAL ENGINEER

9-27-13
for structural

Stantec

SHEET NUMBER
T-1
OF
3

Filename: ...\MSTA\T1_TWC_Fairpoint.dgn Division: BRIDGE Username: common Date:9/25/2013

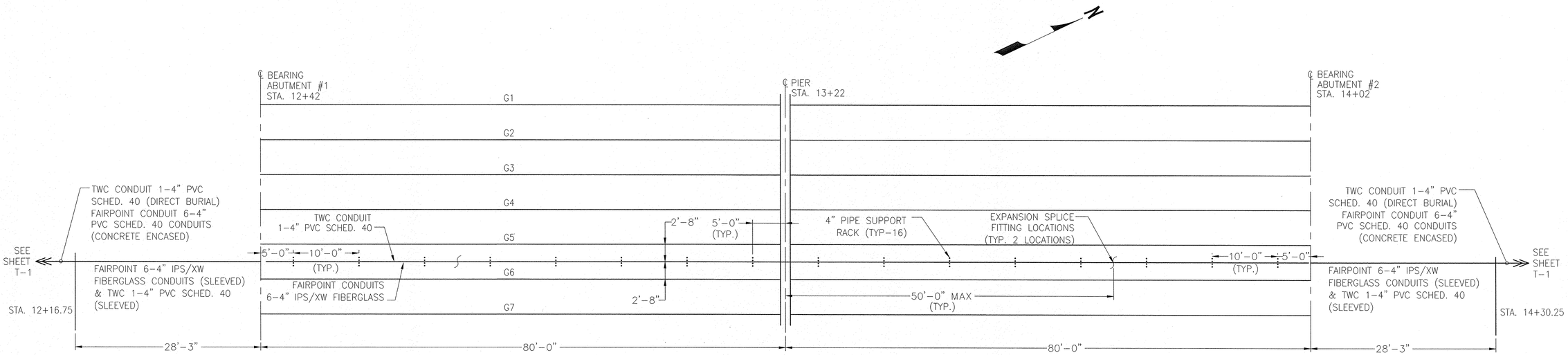

CONDUIT LAYOUT PLAN
SCALE: 1/8"=1'-0"

GENERAL NOTES

1. FAIRPOINT FIBER GLASS CONDUITS STOP 10 FT. BEYOND ENDS OF BRIDGE APPROACH SLABS AND SHALL BE ENCASED IN CONCRETE BEYOND THE BRIDGE APPROACH SLABS. AFTER ENTERING THE CONCRETE THEY SHALL BE HOUSED IN 4" PVC CONDUITS AND SEALED. TOTAL FAIRPOINT RUN IS APPROXIMATELY 755 FEET.
2. TWC CONDUIT CONTINUES TO THE NEAREST MANHOLE AS SHOWN AND BEYOND TO THE WEST AND EAST ON THE SOUTHERN END AND ON THE NORTHERN END, TO THE TIE IN AS SHOWN FOR A TOTAL RUN OF ABOUT 475 FEET. CONDUITS ARE RUN WITHOUT A CONCRETE ENCASEMENT.
3. ALL CONDUITS LOCATED UNDER THE BRIDGE SHALL BE RUN IN FREE AIR AND SUSPENDED BY THEIR INDIVIDUAL RACK ASSEMBLIES AND SHALL BE OF THE TYPE SPECIFIED ON THE DRAWINGS.
4. ALL SLEEVES RUNNING THROUGH THE ABUTMENT BACKWALLS SHALL BE CAST-IN-PLACE OR RUN THROUGH EXISTING BOND-OUTS THEN SEALED OFF WITH A WATERPROOF MORTAR WHEN FINALLY COMPLETED.
5. CONDUITS RUN UNDER THE BRIDGE SHALL HAVE EXPANSION JOINTS AS SHOWN.
6. THESE DRAWINGS ARE BASED ON AVAILABLE BRIDGE DESIGN DRAWINGS. CONTRACTOR SHALL VERIFY ALL DIMENSIONS BEFORE FABRICATION AND INSTALLATION OF CONDUITS AND SUPPORTS.
7. FIBERGLASS DUCT SUPPORTS ARE DESIGNED FOR A MAXIMUM CABLE LOAD OF 8.0 LBS PER FOOT PER 4" DUCT. THE TOTAL CONDUIT LOAD AT A SUPPORT IS 800 LBS MAXIMUM.
8. 4" STRAIGHT COUPLINGS SHALL BE INSTALLED AS REQUIRED.
9. THE CONTRACTOR IS REQUIRED TO COMPLY WITH ALL NATIONALLY ACCEPTED SAFETY PRACTICES, OSHA AND ANY OTHER SAFETY REQUIREMENTS IMPOSED BY THE OWNER, AGENCY OR ANY OTHER PARTIES WHICH MAY HAVE JURISDICTION OVER SAFETY.
10. ALL CONNECTIONS BETWEEN DUCT SECTIONS, EXPANSION JOINTS, ADAPTERS AND COUPLINGS ARE TO BE BONDED. REFER TO MANUFACTURER'S INSTRUCTIONS FOR BONDING PROCEDURES.
11. CAP THE ENDS OF THE DUCTS IF THE UNDERGROUND PORTION OF THE WORK IS NOT DONE AT THE SAME TIME AS THE BRIDGE PORTION.
12. ALL ATTACHMENT RODS, SPACER RODS, NUTS, LOCK AND FLAT WASHERS TO BE ZINC PLATED.
13. THIS DESIGN IS FOR THE EXPRESS PURPOSE FOR USE ON THE BRIDGE OVER THE PRESUMPSCOT RIVER ON BRIDGE STREET IN WESTBROOK MAINE.
14. SIX OF THE 4" CONDUITS TO BE UTILIZED BY BY FAIRPOINT COMMUNICATIONS. THE ONE 4" CONDUIT IS TO BE UTILIZED BY TIME WARNER CABLE AS SHOWN.

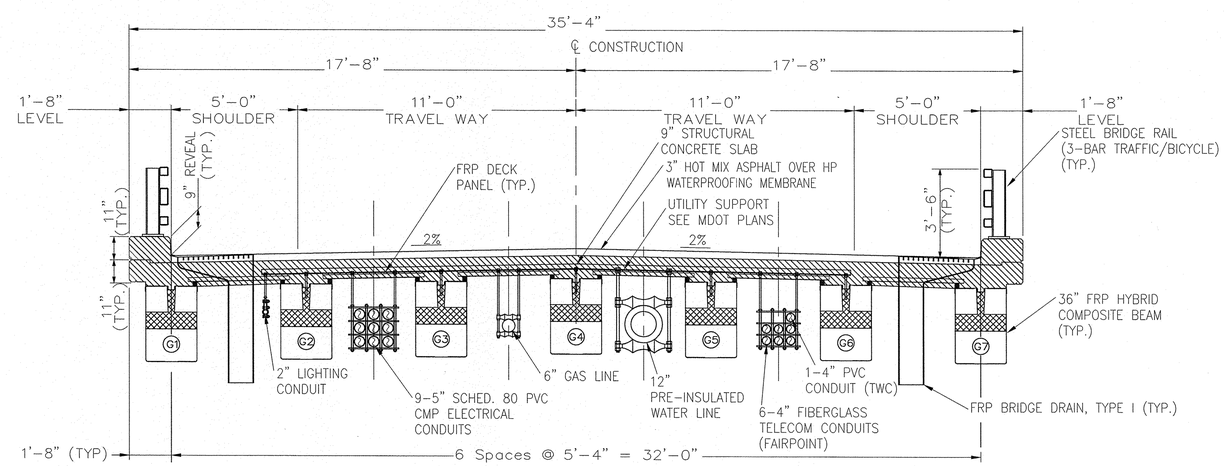

SUPERSTRUCTURE SECTION
SCALE: 3/16"=1'-0"

STATE OF MAINE
TIMOTHY W. MERRITT
No. 9294
LICENSED
PROFESSIONAL ENGINEER
9-27-13
for structural

Stantec Consulting Services Inc.
482 Payne Road, Scarborough ME 04074
Tel. 207.883.3355 Fax. 207.883.3376 www.stantec.com

Project No. 198801015
Scale (AS NOTED)

TWC-FAIRPOINT CONDUIT LAYOUT

STATE OF MAINE
RICHARD C. HENDEE, JR.
No. 7674
LICENSED
PROFESSIONAL ENGINEER

		DATE
SIGNATURE #7674		9-25-13
P.E. NUMBER		9-25-13
9-27-2013		9-25-13
DATE		

PROJ. MANAGER	TIM MERRITT
CHECKED BY:	D. HENDEE
DESIGNED BY:	R. WACHON
DRAWN BY:	D. GODFREY

WESTBROOK-BRIDGESTREET BRIDGE OVER PRESUMPSCOT RIVER

TWC-FAIRPOINT CONDUIT LAYOUT

SHEET NUMBER
T-2
OF
3

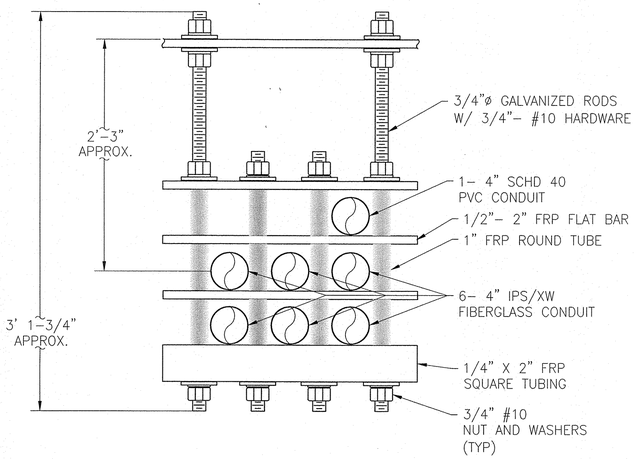

TWC/FAIRPOINT
CONDUIT AND GALVANIZED HANGER
ELEVATION VIEW
N.T.S.

NOTE: ASSEMBLY TO BE SET LEVEL

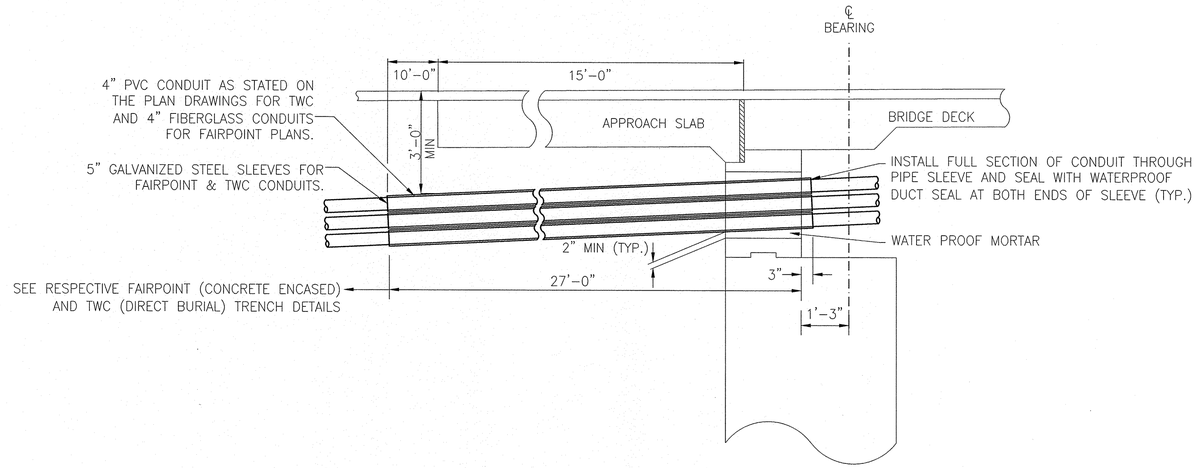

TYPICAL CONDUIT AT ABUTMENT
ELEVATION VIEW
NTS

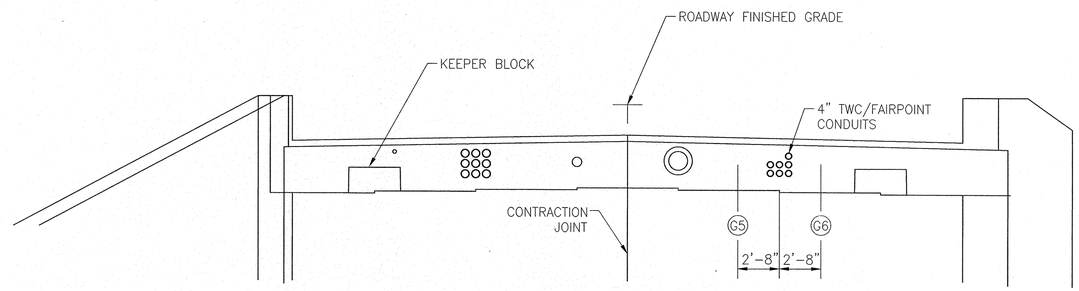

ABUTMENT 2
ELEVATION VIEW
LOOKING NORTH
N.T.S.

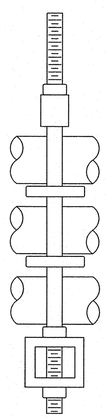

NOTE:
ALL HARDWARE AND RODS TO
BE HOT DIP GALVANIZED.

TYPICAL CONDUIT
GALVANIZED HANGER
PROFILE ELEVATION VIEW
N.T.S.

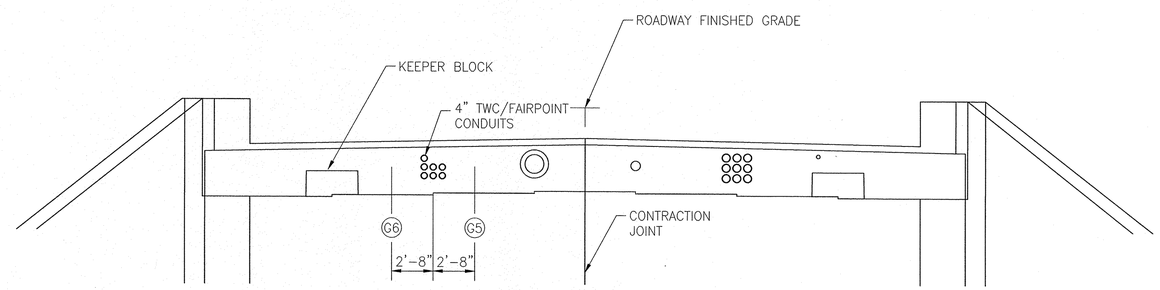

ABUTMENT 1
ELEVATION VIEW
LOOKING SOUTH
N.T.S.

STATE OF MAINE
TIMOTHY W.
MERRITT
No. 9294
LICENSED
PROFESSIONAL ENGINEER
9-27-13
for structural

Stantec Consulting Services Inc.
482 Payne Road, Scarborough ME. 04074
Tel. 207.883.3355 Fax. 207.883.3376 www.stantec.com

Project No. 198801015
Scale (AS NOTED)

TWC-FAIRPOINT DETAILS

STATE OF MAINE
RICHARD C.
HENDEE, JR.
No. 7674
LICENSED
PROFESSIONAL ENGINEER

PROJ. MANAGER	TIM MERRITT	
CHECKED BY	D. HENDEE	9-23-13
DESIGNED BY	R. VACHON	9-23-13
DRAWN BY	D. GODFREY	9-23-13

SIGNATURE #7674
P.E. NUMBER
9-27-2013
DATE

WESTBROOK-BRIDGESTREET BRIDGE
OVER PRESUMPSCOT RIVER

TWC-FAIRPOINT DETAILS

SHEET NUMBER
T-3
OF
3

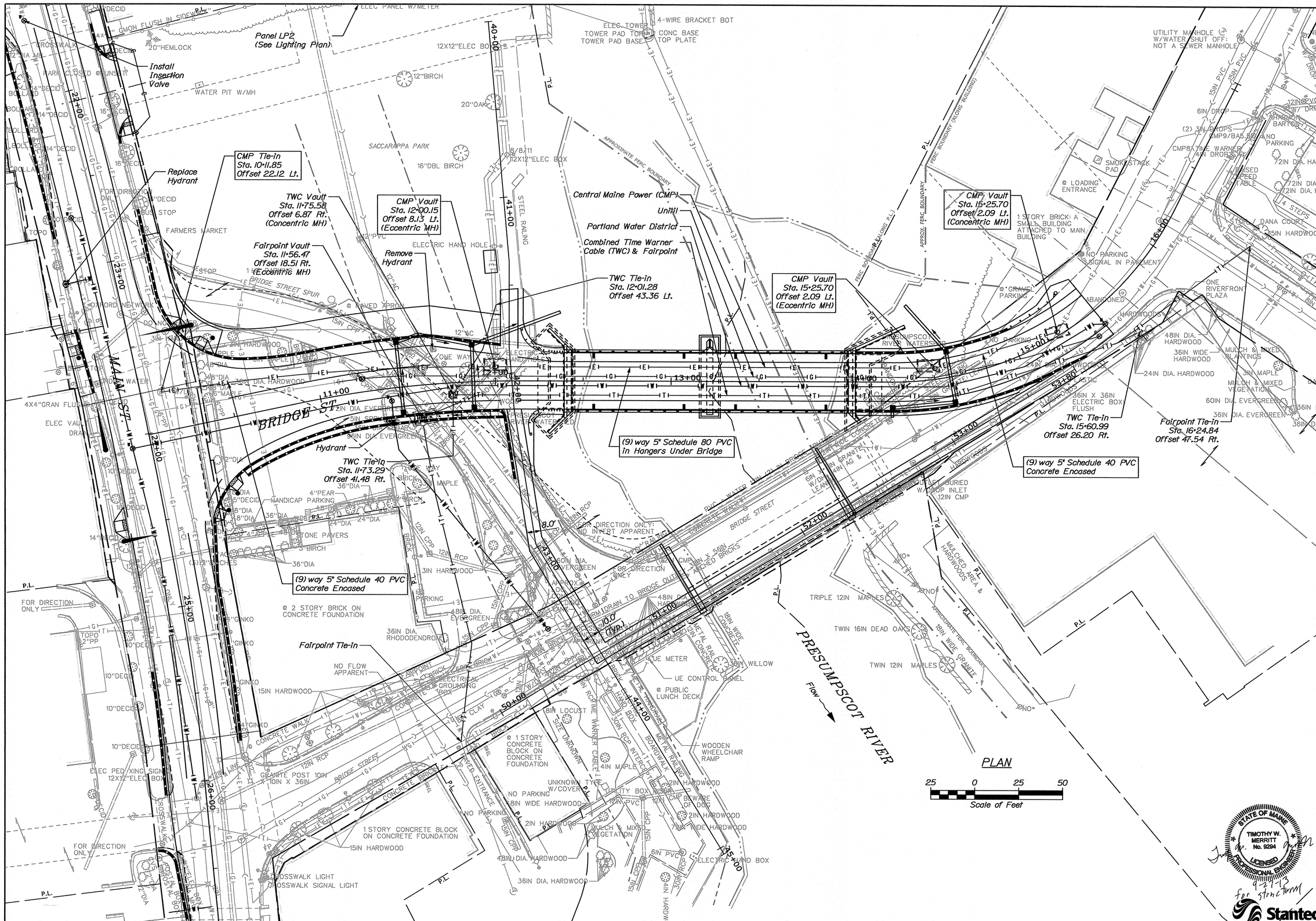

Stantec Consulting Services Inc.
40 Longwater Drive, Scarborough, ME 04074
Tel. 207.883.3355 Fax 207.883.3976 www.stantec.com

Project No. 198801015

Scale AS NOTED

CENTRAL MAINE POWER CONDUITS

STATE OF MAINE — RICHARD C. HENDEE, JR. No. 7674 — LICENSED PROFESSIONAL ENGINEER

		DATE
PROJ. MANAGER	TIM MERRITT	
CHECKED BY	D. HENDEE	9-25-13
DESIGNED BY	R. VACHON	9-25-13
DRAWN BY	D. GODFREY	9-25-13

SIGNATURE

P.E. NUMBER #7674

DATE 9-27-2013

WESTBROOK – BRIDGE STREET BRIDGE OVER PRESUMPSCOT RIVER

CENTRAL MAINE POWER CONDUIT LAYOUT

STATE OF MAINE — TIMOTHY W. MERRITT No. 9294 — LICENSED PROFESSIONAL ENGINEER

9-27-13

for structures

Stantec

SHEET NUMBER E-1 OF 3

Filename: ...\00\BRIDGE\MSTA\E1_CMP.dgn Division: BRIDGE Username: common Date:9/25/2013

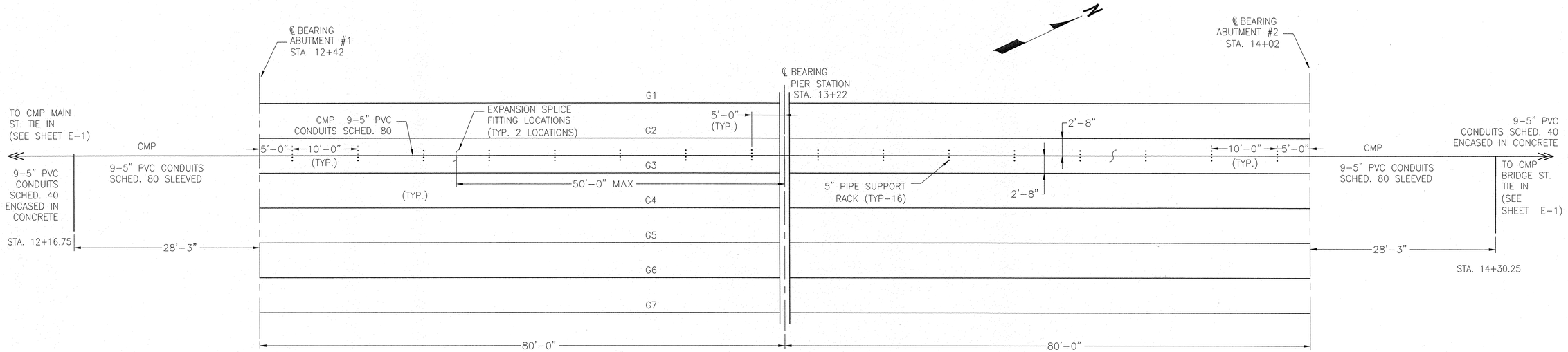

CONDUIT LAYOUT PLAN
SCALE: 1/8"=1'-0"

GENERAL NOTES

1. CMP CONDUITS RUN SOUTH TO A MANHOLE ON MAIN ST. AND NORTH TO A MANHOLE ON NORTH BRIDGE ST. AS SHOWN FOR A TOTAL RUN OF APPROXIMATELY 500 FEET OF CONDUITS SHALL BE ENCASED IN CONCRETE.
2. CONDUITS RUN UNDER THE BRIDGE SHALL BE SCHEDULE 80 AS SHOWN, AND STOP AT THE NEAREST MANHOLE. CONDUITS RUN UNDER THE STREET FROM EACH LOCAL BRIDGE MANHOLE TO THE NEXT FURTHEST MANHOLE SHALL BE SCHEDULE 40.
3. ALL CONDUITS LOCATED UNDER THE BRIDGE SHALL BE RUN IN FREE AIR AND SUSPENDED BY THEIR INDIVIDUAL RACK ASSEMBLIES AND SHALL BE OF THE TYPE SPECIFIED ON THE DRAWINGS.
4. ALL SLEEVES RUNNING THRU THE ABUTMENT BACKWALLS SHALL BE CAST-IN-PLACE OR RUN THROUGH EXISTING BOND-OUTS THEN SEALED OFF WITH A WATERPROOF MORTAR WHEN FINALLY COMPLETED.
5. CONDUITS RUN UNDER THE BRIDGE SHALL HAVE EXPANSION JOINTS LOCATED AS SHOWN.
6. THESE DRAWINGS ARE BASED ON AVAILABLE BRIDGE DESIGN DRAWINGS. CONTRACTOR SHALL VERIFY ALL DIMENSIONS BEFORE FABRICATION AND INSTALLATION OF CONDUITS AND SUPPORTS.
7. FIBERGLASS DUCT SUPPORTS ARE DESIGNED FOR A MAXIMUM CABLE AND CONDUIT LOAD OF 112 LBS PER FOOT TOTAL. THE TOTAL CONDUIT LOAD AT A SUPPORT IS 1500 LBS MAXIMUM.
8. 5" STRAIGHT COUPLINGS SHALL BE INSTALLED AS REQUIRED.
9. THE CONTRACTOR IS REQUIRED TO COMPLY WITH ALL NATIONALLY ACCEPTED SAFETY PRACTICES, OSHA AND ANY OTHER SAFETY REQUIREMENTS IMPOSED BY THE OWNER, AGENCY OR ANY OTHER PARTIES WHICH MAY HAVE JURISDICTION OVER SAFETY.
10. ALL CONNECTIONS BETWEEN DUCT SECTIONS, EXPANSION JOINTS, ADAPTERS AND COUPLINGS ARE TO BE BONDED. REFER TO MANUFACTURER'S INSTRUCTIONS FOR BONDING PROCEDURES.
11. CAP THE ENDS OF THE DUCTS IF THE UNDERGROUND PORTION OF THE WORK IS NOT DONE AT THE SAME TIME AS THE BRIDGE PORTION.
12. ALL ATTACHMENT RODS, SPACER RODS, NUTS, LOCK AND FLAT WASHERS TO BE ZINC PLATED.
13. THIS DESIGN IS FOR THE EXPRESS PURPOSE FOR USE ON THE BRIDGE OVER THE PRESUMPSCOT RIVER ON BRIDGE STREET IN WESTBROOK MAINE.
14. ALL OF THE 5" CONDUIT TO BE UTILIZED BY CENTRAL MAINE POWER.

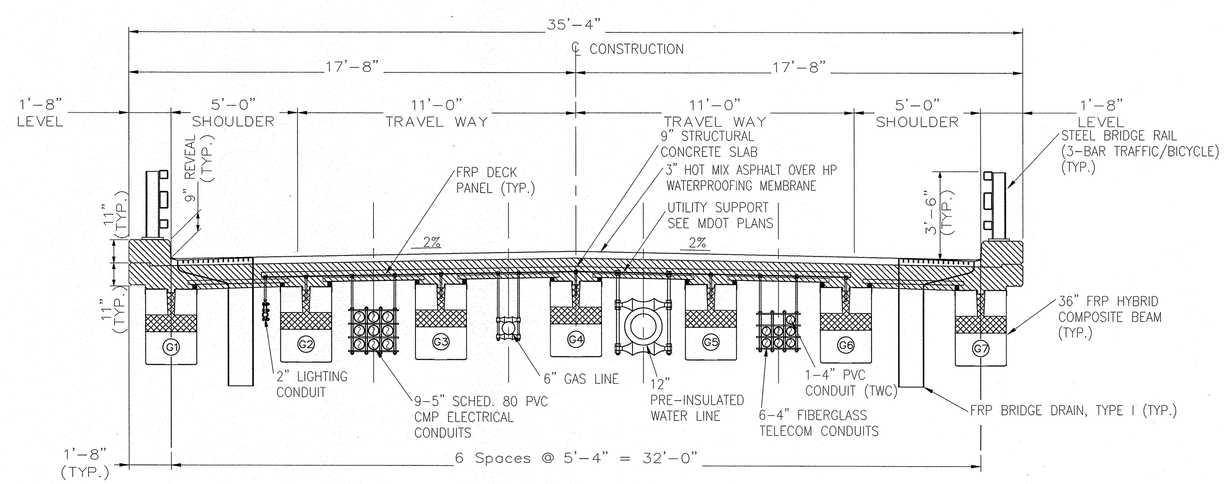

SUPERSTRUCTURE SECTION
SCALE: 3/16"=1'-0"

STATE OF MAINE
TIMOTHY W. MERRITT
No. 9294
LICENSED
PROFESSIONAL ENGINEER
9-27-13
for structural

Stantec Consulting Services Inc.
482 Payne Road, Scarborough ME, 04074
Tel. 207.883.3355 Fax. 207.883.3376 www.stantec.com

Stantec
Project No. 198801015
Scale (AS NOTED)

CMP CONDUIT LAYOUT

STATE OF MAINE
RICHARD C. FREYSE JR.
No. 7674
LICENSED
PROFESSIONAL ENGINEER

		DATE
PROJ. MANAGER	TIM MERRITT	
CHECKED BY	D. HENDEE	9-25-13
DESIGNED BY	R. VACHON	9-25-13
DRAWN BY	D. GOUTREY	9-25-13

SIGNATURE
#7674
P.E. NUMBER
9-27-2013
DATE

WESTBROOK-BRIDGESTREET BRIDGE
OVER PRESUMPSCOT RIVER

CMP CONDUIT LAYOUT

SHEET NUMBER
E-2
OF
3

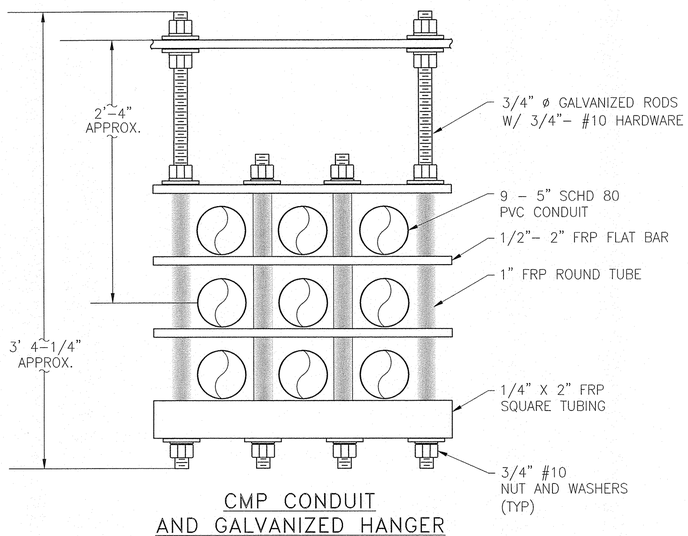

CMP CONDUIT
AND GALVANIZED HANGER
ELEVATION VIEW
N.T.S.
NOTE: ASSEMBLY TO BE SET LEVEL

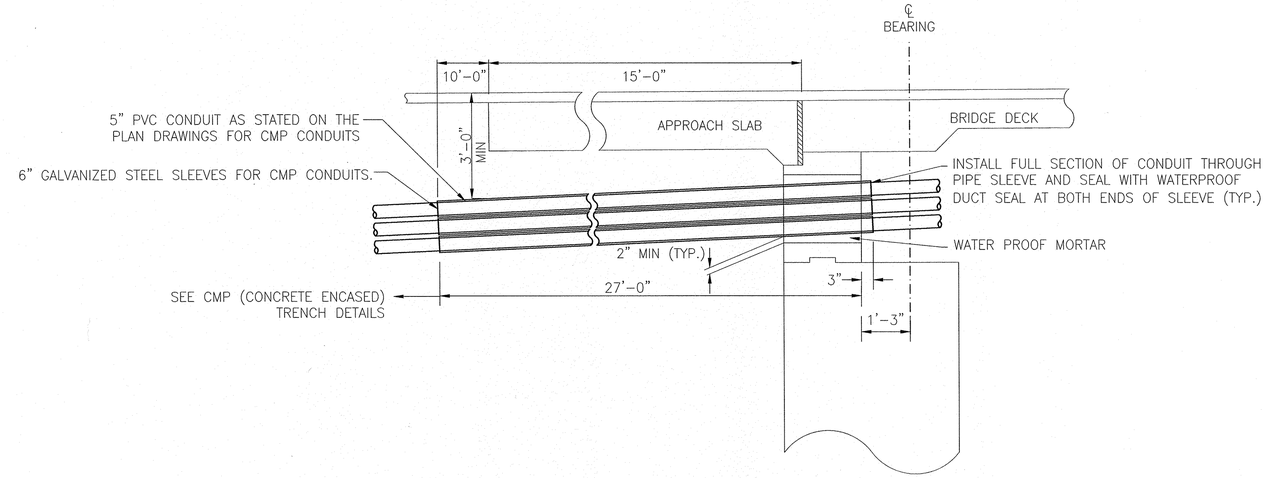

TYPICAL CONDUIT AT ABUTMENT
ELEVATION VIEW
NTS

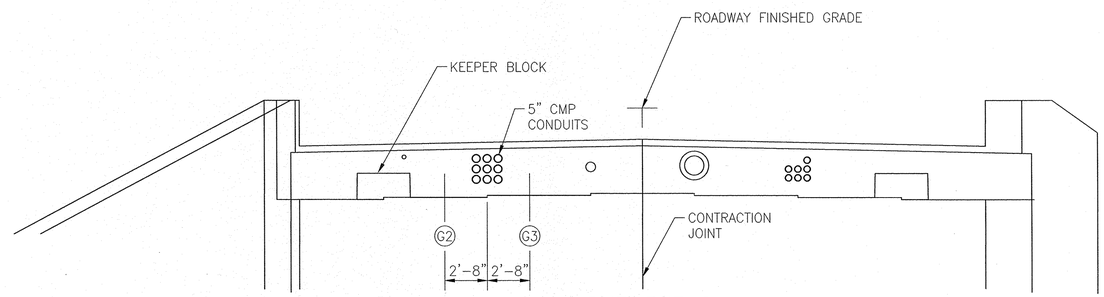

ABUTMENT 2
ELEVATION VIEW
LOOKING NORTH
N.T.S.

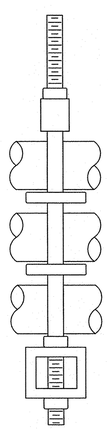

NOTE:
ALL HARDWARE AND RODS TO BE HOT DIP GALVANIZED.

TYPICAL CONDUIT
GALVANIZED HANGER
PROFILE ELEVATION VIEW
N.T.S.

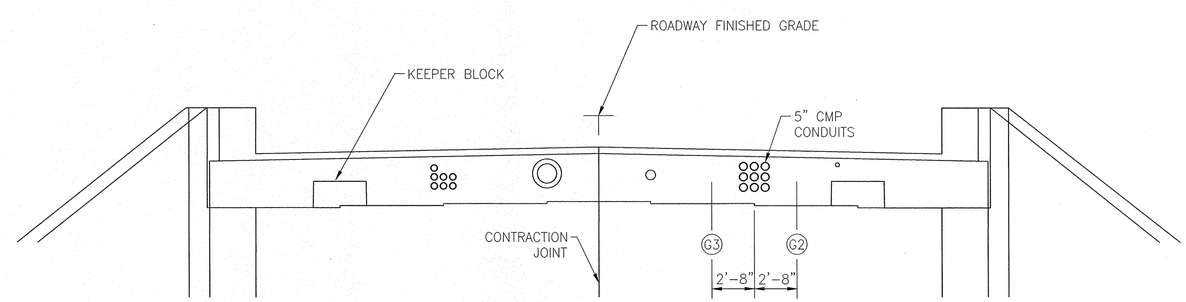

ABUTMENT 1
ELEVATION VIEW
LOOKING SOUTH
N.T.S.

STATE OF MAINE
TIMOTHY W. MERRITT
No. 9294
LICENSED
PROFESSIONAL ENGINEER
9-27-13
for structural

Stantec Consulting Services Inc.
482 Payne Road, Scarborough ME 04074
Tel. 207.883.3355 Fax. 207.883.3376 www.stantec.com

Project No. 198801015
Scale (AS NOTED)

CMP CONDUIT DETAILS

STATE OF MAINE
RICHARD C. HENDEE, JR.
No. 7614
LICENSED
PROFESSIONAL ENGINEER

		DATE
PROJ. MANAGER	TIM MERRITT	
CHECKED BY	D. HENDEE	9-25-13
DESIGNED BY	R. VACHON	9-25-13
DRAWN BY	D. GODFREY	9-25-13

P.E. NUMBER #7674
SIGNATURE
DATE 9-27-2013

WESTBROOK-BRIDGESTREET BRIDGE
OVER PRESUMPSCOT RIVER

CMP CONDUIT DETAILS

SHEET NUMBER
E-3
OF
3

Stantec

ENGINEERING, PERMITTING & LANDSCAPE ARCHITECTURE

STANTEC CONSULTING SERVICES INC.
482 PAYNE ROAD SCARBOROUGH ME U.S.A. 04074
Tel. 207.883.3355
Fax. 207.883.3376
www.stantec.com

GENERAL NOTES:

1. PROJECT IS LOCATED WITHIN THE CITY OF WESTBROOK – CITY CENTER DISTRICT, GENERAL DEVELOPMENT DISTRICT, SHORELAND, DOWNTOWN HOUSING DISTRICT AND VILLAGE OVERLAY DISTRICT.
2. SURVEY PROVIDED BY MAINEDOT 2011.
   COORDINATE SYSTEM: NAD 83(96) ME 2000 WEST ZONE
   VERTICAL DATUM: NAVD 88. COORDINATE WITH MAINE DOT FOR VERTICAL AND HORIZONTAL BENCHMARKS, REFERENCES AND CONTROLS.
3. THE PROJECT IS SUBJECT TO SITE PLAN REVIEW AND VILLAGE OVERLAY DISTRICT REVIEW BY THE CITY OF WESTBROOK.
4. THE CONTRACTOR SHALL BE RESPONSIBLE FOR NOTIFYING "DIG–SAFE" AND LOCAL UTILITY COMPANIES AT LEAST 3 BUSINESS DAYS, BUT NOT MORE THAN 30 CALENDAR DAYS, PRIOR TO THE COMMENCEMENT OF ANY EXCAVATION, OR AS OTHERWISE REQUIRED BY MAINE STATE LAW.
5. THE CONTRACTOR SHALL BE SOLELY RESPONSIBLE FOR ALL MEANS, METHODS AND TECHNIQUES EMPLOYED TO PERFORM THE WORK SHOWN ON THESE PLANS.
6. ALL WORK SHALL COMPLY WITH ALL LOCAL, STATE, AND FEDERAL SAFETY REGULATIONS.
7. EXISTING & PROPOSED UTILITIES ARE SHOWN FOR REFERENCE ONLY. THE CONTRACTOR IS RESPONSIBLE FOR VERIFYING ALL EXISTING UTILITIES PRIOR TO COMMENCING WORK.
8. ALL UTILITY FACILITIES SHALL BE COORDINATED WITH OR ADJUSTED BY THE RESPECTIVE UTILITIES UNLESS OTHERWISE NOTED.
9. ALL WORK SHALL BE IN CONFORMANCE WITH MAINEDOT, CITY OF WESTBROOK, AND ALL UTILITY COMPANIES STANDARDS.
10. CONTRACTOR SHALL VERIFY LOCATIONS AND DEPTHS OF ALL UTILITIES WITH THE RESPECTIVE COMPANY PRIOR TO THE START OF CONSTRUCTION. IF ANY DISCREPANCIES OR CONFLICTS ARE FOUND, THE CONTRACTOR SHALL NOTIFY THE ENGINEER AND OWNER PRIOR TO PROCEEDING.
11. THE CONTRACTOR SHALL SECURE ALL NECESSARY CONSTRUCTION ACTIVITY PERMITS FOR THE WORK SHOWN ON THESE PLANS PRIOR TO CONSTRUCTION.
12. ALL PAVEMENT CUTS SHALL BE SAW CUT TO RESULT IN CLEAN EDGES. A TACK COAT SHALL BE APPLIED ALONG THE CUT EDGES AND NEW PAVEMENT BUTTED TO IT, UNLESS OTHERWISE DIRECTED BY THE ENGINEER.
13. SAW CUTTING INCIDENTAL TO CONTRACT ITEMS.
14. ANY NECESSARY CLEANING OF EXISTING PAVEMENT PRIOR TO PAVING SHALL BE INCIDENTAL TO THE RELATED PAVING ITEMS.
15. CONDUIT SHALL BE USED FOR ELECTRIC, TELEPHONE, AND TV IN ACCORDANCE WITH THE RESPECTIVE COMPANIES' REQUIREMENTS.
16. RIGHT OF WAY AND PROPERTY RIGHTS HAVE BEEN SECURED BY MAINEDOT FOR THE CITY PROJECT. SEE MAINEDOT RIGHT OF WAY PLANS.
17. ALL CLEARING SHALL BE CONSIDERED INCIDENTAL TO THE CONTRACT AND NO SEPARATE PAYMENT WILL BE MADE. THE ACTUAL LINES FOR CLEARING SHALL BE ESTIMATED IN THE FIELD BY THE RESIDENT. INDIVIDUAL TREES LARGER THAN 12 DIA. TO BE REMOVED INCLUDING STUMPS SHALL BE PAID FOR UNDER PAY ITEMS 201.23 AND 201.24.
18. NO EXISTING DRAINAGE SHALL BE ABANDONED, REMOVED, OR PLUGGED WITHOUT PRIOR APPROVAL OF THE RESIDENT.
19. ANY DAMAGE TO THE EXISTING SLOPES OUTSIDE OF THE DESIGNATED SLOPE LIMITS CAUSED BY THE CONTRACTOR'S EQUIPMENT, PERSONNEL, OR OPERATION SHALL BE REPAIRED TO THE SATISFACTION OF THE RESIDENT. ALL WORK, EQUIPMENT, AND MATERIALS REQUIRED TO MAKE SUCH REPAIRS SHALL BE AT THE CONTRACTOR'S EXPENSE.
20. THIS PROJECT SHALL BE COORDINATED WITH AND MAKES REFERENCES TO DRAWINGS PREPARED SEPARATELY FOR STATE OF MAINE DEPARTMENT OF TRANSPORTATION ENTITLED "WESTBROOK, CUMBERLAND COUNTY, BRIDGE STREET BRIDGE OVER PRESUMPSCOT RIVER, REFERENCES, OCTOBER 2013, HEREIN TO MDOT OR MAINE DOT PLANS OR DRAWINGS SHALL REFER TO SAME.
21. THIS PROJECT SHALL BE COORDINATED WITH AND MAKES REFERENCES TO DRAWINGS PREPARED SEPARATELY BY PORTLAND WATER DISTRICT, ENTITLED "MAIN STREET/BRIDGE STREET, WESTBROOK, WATER MAIN REPLACEMENT. REFERENCES MADE HEREIN TO PORTLAND WATER DISTRICT OR PWD PLANS SHALL REFER TO SAME.

UTILITIES:

ELECTRIC
CENTRAL MAINE POWER CO. (ELECTRIC)
CONTACT: MARSHALL RIPLEY (TEL. 791–1022)

WATER
PORTLAND WATER DISTRICT (WATER)
CONTACT: TIM MCMULLIN (TEL. 524–5242)

NATURAL GAS
UNITIL (NATURAL GAS)
CONTACT: LYNN BEST (TEL. 603–294–5117)

CABLE
TV TIME WARNER (CABLE TV)
CONTACT: MARK PELLETIER (TEL. 253–2324)

TELEPHONE
FAIRPOINT COMMUNICATIONS
CONTACT: MARTIN PEASE (TEL. 797–1119)

PROJECT LOCATION

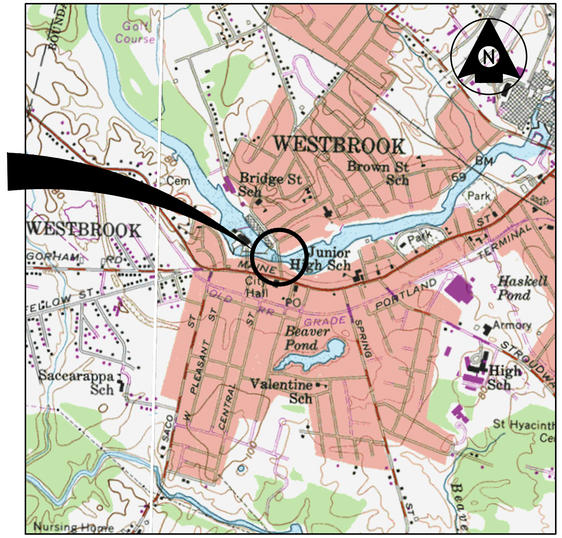

VICINITY MAP
NOT TO SCALE

HEART OF DOWNTOWN
STREETSCAPE IMPROVEMENTS
MAIN AND OLD BRIDGE STREET
WESTBROOK, MAINE 04092

PREPARED FOR:
CITY OF WESTBROOK
2 YORK STREET
WESTBROOK, MAINE 04092

PERMITS REQUIRED:	DATE RECEIVED
CITY OF WESTBROOK–	AUGUST 06, 2013
SITE PLAN REVIEW APPROVAL	
VILLAGE OVERLAY DISTRICT REVIEW	

LEGEND

EXISTING		PROPOSED
	GRANITE CURB	
SS	SANITARY SEWER	SS
SD	STORM DRAIN	SD
GAS	GAS	GAS
W	WATER MAIN (P)=POTABLE,(F)=FIRE	W
OHW	OVERHEAD WIRE	OHW
	UNDERGRND ELEC, TELEPHONE & CATV	E
	UTILITY POLE	
	CATCH BASIN	
	MANHOLE	
	HYDRANT	
	GATE VALVE	
	TRANSFORMER	
	SIDEWALK RAMP	
	EROSION CONTROL MATTING	
	AREA LIGHT	
	STREET LIGHT	A
	RIVERWALK RAILING	
	RIGHT OF WAY	
PL	PROPERTY LINE	

STATE OF MAINE
PATRICK L. CLARK
No. 5749
LICENSED
PROFESSIONAL ENGINEER

INDEX OF DRAWINGS:

DWG. #	
C–0	COVER SHEET
C–0.1	ESTIMATED QUANTITIES
C–1	EXISTING CONDITIONS AND REMOVALS SHEET 1 OF 2
C–2	EXISTING CONDITIONS AND REMOVALS SHEET 2 OF 2
C–3	SITE LAYOUT AND UTILITIES SHEET 1 OF 2
C–4	SITE LAYOUT AND UTILITIES SHEET 2 OF 2
C–5	SITE GRADING AND DRAINAGE SHEET 1 OF 2
C–6	SITE GRADING AND DRAINAGE SHEET 2 OF 2
C–6A	NORTH AND SOUTH PLAZAS DETAILED LAYOUT AND GRADING
C–7	PLANTING SHEET 1 OF 2
C–8	PLANTING SHEET 2 OF 2
C–9	PLANTING DETAILS SHEET
C–10	DRAINAGE SYSTEM DETAILS SHEET
C–11	EROSION CONTROL DETAILS SHEET
C–12	SIDEWALK AND PAVEMENT DETAILS SHEET
C–13	PAVEMENT AND SITE DETAILS SHEET
C–14	CURBING AND SITE DETAILS SHEET
C–15	SITE FEATURE DETAILS SHEET
C–16	RIVERWALK OVERLOOKS SHEET 1 OF 1
C–17	RIVERWALK EXPANSION AND REDECKING SHEET 1 OF 2
C–18	RIVERWALK EXPANSION AND REDECKING SHEET 2 OF 2
C–19	PRECAST CONCRETE WALL RECONSTRUCTION DETAILS
C–20	ORNAMENTAL RAILING DETAILS SHEET 1 OF 2
C–21	ORNAMENTAL RAILING DETAILS SHEET 2 OF 2

OUTLINE OF WORK

STREETSCAPE IMPROVEMENTS & ENHANCEMENTS AT OLD BRIDGE STREET AND PORTIONS OF MAIN STREET

PARKING LOT RECONFIGURATION AND PAVEMENT

RIVERWALK EXTENSION AND OVERLOOKS

NORTH–SOUTH TRAIL (CONCRETE WALKS) AND PAVED PLAZA WITH PLANTINGS AND SITE FURNISHINGS.

ORNAMENTAL LIGHTING NEW AND RELOCATION

DRAINAGE IMPROVEMENTS

STRIPING AND SIGNAGE

MAP 32/33 LOTS 114/127 SEPTEMBER 5, 2014

210800963 P-D_TITLE_SHEET

SECTION 1 – ESTIMATED QUANTITIES HEART OF DOWNTOWN STREETSCAPE IMPROVEMENT

ITEM NO.	DESCRIPTION	QTY	UNIT
201.23	REMOVING SINGLE TREE TOP ONLY	12	EA
201.24	REMOVING STUMP	12	EA
201.30	TREE GRATE	32	EA
201.31	TREE GUARD	32	EA
202.111	REMOVING OF CONCRETE SIDEWALK	780	SY
202.15	REM MANHOLE OR CATCH BASIN	1	EA
202.202	REMOVING PAVEMENT SURFACE	500	SY
203.20	COMMON EXCAVATION	1518	CY
203.2333	DISPOSAL OF SPECIAL EXCAVATION	50	T
206.061	STR EARTH BELOW GRADE STR	35	CY
304.09	AGGR BASE CRS - CRUSHED	105	CY
304.10	AGGR SUBB COURSE - GRAVEL	883	CY
403.209	HOT MIX ASPHALT 9.5 MM (INCIDENTALS)	23	T
403.210	HOT MIX ASPHALT 9.5 MM	146	T
403.213	HOT MIX ASPHALT 12.5 MM BASE	178	T
409.15	BITUMINOUS TACK COAT - APPLIED	77	G
421.30	BRICK PAVERS	590	SY
424.3331	ASPHALT LOW MODULUS CRACK SEALER, APP	100	LB
502.341	STR CONC ROADWAY MEDIAN	8	CY
507.0842	ORNAMENTAL PEDESTRIAN RAILING (300 LF)	1	LS
603.159	12" CULV PIPE OPTION III	70	LF
604.072	CATCH BASIN TYPE A1-C	1	EA
604.16	ALTER CATCH BASIN TO MANHOLE	2	EA
604.18	ADJUST MANHOLE OR CB TO GRADE	20	EA
604.182	CLEAN EXISTING C.B. AND MANHOLE	10	EA
604.247	CATCH BASIN TYPE F5-C	2	EA
604.249	CATCH BASIN TYPE F6-C	1	EA
604.30	SPECIAL CATCH BASIN	11	EA
605.07	4" UNDERDRAIN PIPE	220	LF

ITEM NO.	DESCRIPTION	QTY	UNIT
608.08	REINFORCED CONCRETE SIDEWALK - 5" CITY SIDEWALK	1790	SY
608.08	REINFORCED CONCRETE SIDEWALK - 6" CITY PLAZA	864	SY
608.26	CURB RAMP DETECTABLE WARNING FIELD	144	SF
609.11	VERT CURB TYPE 1	223	LF
609.12	VERT CURB TYPE 1- CIRCULAR	266	LF
609.237	TERMINAL CURB TYPE 1 - 7 FOOT	15	EA
609.2371	TERMINAL CURB TYPE 1- 7 FT - CIRCULAR	10	EA
609.312	SPECIAL CURB - WHEEL STOP	96	LF
609.38	RESET CURB TYPE 1	325	LF
609.441	CURBING REMOVED AND STACKED	462	LF
610.18	STONE DITCH PROTECTION	20	CY
613.319	EROSION CONTROL BLANKET	110	SY
615.07	LOAM	283	CY
616.08	SODDING	177	SY
617.30	COMPOSTED BARK MIX	74	CY
618.1401	SEEDING METHOD NUMBER 2 - PLAN QUANTITY	4.5	UN
618.25	APPLIED WATER	10	MGAL
619.12	MULCH	4.5	UN
620.58	EROSION CONTROL GEOTEXTILE	120	SY
621.132	SM DECID TR (1"-1.50" CAL) GP A	32	EA
621.273	LG DECID TR (2"-2.50" CAL) GP A	26	EA
621.395	DWF EVERGREENS (18"-24") GP A	14	EA
621.513	HYBRID RHODODENDRON (2.50'-3')	13	EA
621.552	DECID SHRUBS (3'-4') GP A	3	EA
621.71	HERBACEOUS PERENNIALS GP A	198	EA
621.713	HERBACEOUS PERENNIALS & GROUND COVER	43	EA
621.80	ESTABLISHMENT PERIOD	1	LS
623.09	REMOVE AND RELOCATE STATUE	1	EA
627.733	4" WHITE OR YELLOW PAINTED PAVE MRK LINE	1696	LF
627.75	WHITE OR YELLOW PAVEMENT & CURB MARKING	851	SF
627.77	REMOVING PAVEMENT MARKINGS	287	SF

ITEM NO.	DESCRIPTION	QTY	UNIT
637.071	DUST CONTROL	1	LS
641.12	BENCH	9	EA
641.34	TRASH RECEPTACLE	5	EA
645.103	DEMOUNT GUIDE SIGN	13	EA
645.113	REINSTALL GUIDE SIGN	12	EA
645.292	REG,WARN,CONF,RT SIGNS TYPE II	17	SF
652.312	TYPE III BARRICADE	8	EA
652.33	DRUM	10	EA
652.34	CONE	20	EA
652.35	CONSTRUCTION SIGNS	250	SF
652.38	FLAGGER	500	HR
656.75	TEMP SOIL EROSION & WATER POLLUTION CTRL	1	LS
659.10	MOBILIZATION	1	LS
823.332	GATE VALVE BOX, ADJUST TO GRADE	15	EA
824.32	REMOVE/RESET HYDRANT	1	EA
841.48	BOLLARDS	15	EA
910.301	SPECIAL WORK - RIVERWALK OVERLOOKS	1	LS
	CITY WATER MAIN (PWD)		
203.25	GRANULAR BORROW	25	CY
822.3405	8" CL 52 DI PIPE PUSH ON JOINT	160	LF
823.325	8" GATE VALVE	2	EA
	SECTION 2 - RIVERWALK EXPANSION/REDECKING		
501.20	TIMBER PILE TREATED	400	LF
910.301	SPECIAL WORK - RIVERWALK EXPANSION AND REDECKING	1	LS

Stantec Consulting Services Inc.
482 Payne Road, Scarborough ME. 04074
Tel. 207.883.3355 Fax. 207.883.3376 www.stantec.com

Project No. 21800963
Scale (AS NOTED)

CITY OF WESTBROOK

STATE OF MAINE
PATRICK L. CLARK
No. 5749
LICENSED
PROFESSIONAL ENGINEER

DESIGN–DETAILED	DMG	PLC	9/5/14
CHECKED–REVIEWED	PLC	TWM	9/5/14
DESIGN2–DETAILED2		DMG	9/5/14
DESIGN3–DETAILED3			
REVISIONS 1			
REVISIONS 2			
REVISIONS 3			
REVISIONS 4			
FIELD CHANGES			

SIGNATURE
P.E. NUMBER 5749
DATE SEPTEMBER 5, 2014

HEART OF DOWNTOWN STREETSCAPE IMPROVEMENTS

ESTIMATED QUANTITIES

SHEET NUMBER
C0.1

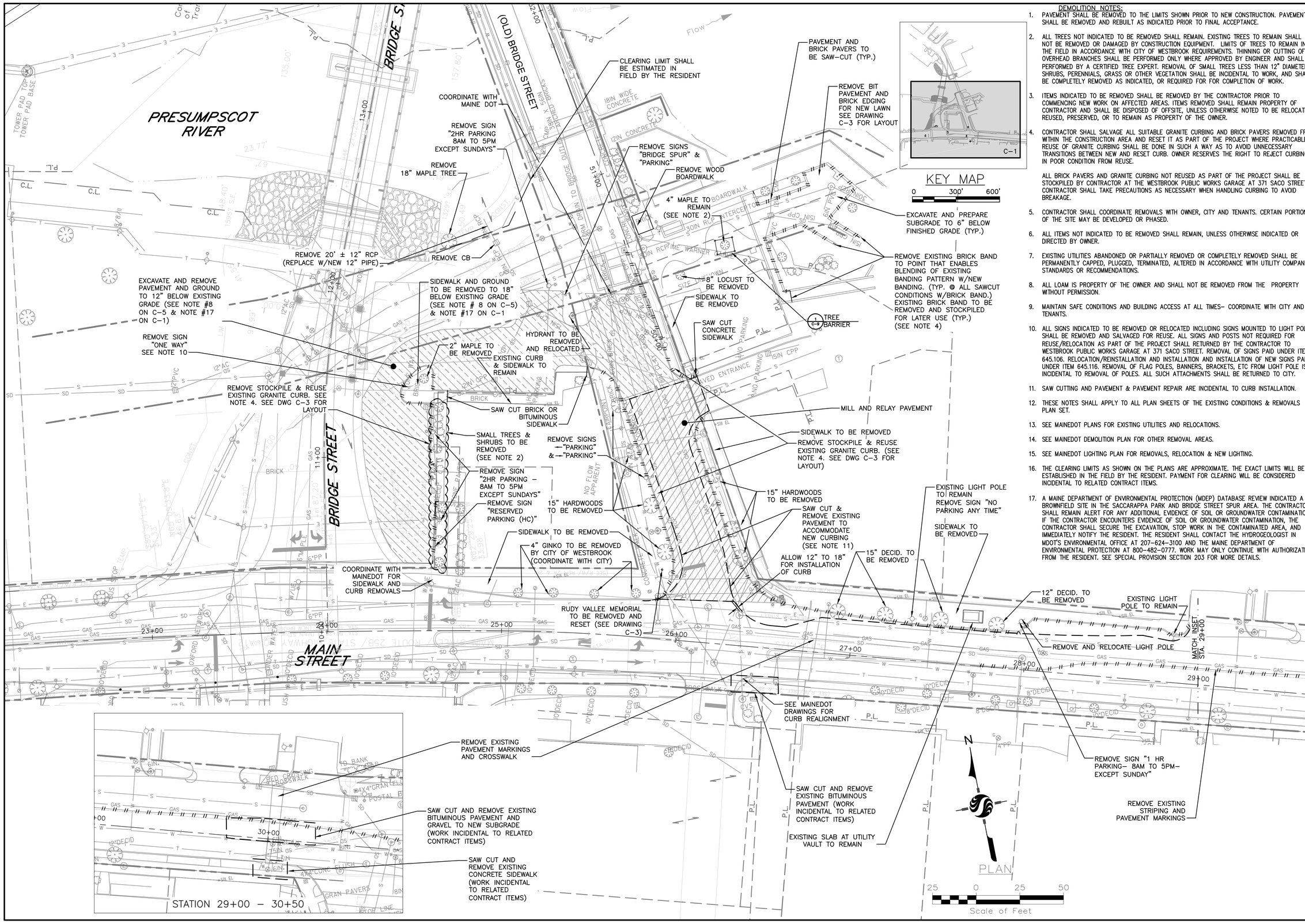

DEMOLITION NOTES:

1. PAVEMENT SHALL BE REMOVED TO THE LIMITS SHOWN PRIOR TO NEW CONSTRUCTION. PAVEMENT SHALL BE REMOVED AND REBUILT AS INDICATED PRIOR TO FINAL ACCEPTANCE.
2. ALL TREES NOT INDICATED TO BE REMOVED SHALL REMAIN. EXISTING TREES TO REMAIN SHALL NOT BE REMOVED OR DAMAGED BY CONSTRUCTION EQUIPMENT. LIMITS OF TREES TO REMAIN IN THE FIELD IN ACCORDANCE WITH CITY OF WESTBROOK REQUIREMENTS. THINNING OR CUTTING OF OVERHEAD BRANCHES SHALL BE PERFORMED ONLY WHERE APPROVED BY ENGINEER AND SHALL BE PERFORMED BY A CERTIFIED TREE EXPERT. REMOVAL OF SMALL TREES LESS THAN 12" DIAMETER, SHRUBS, PERENNIALS, GRASS OR OTHER VEGETATION SHALL BE INCIDENTAL TO WORK, AND SHALL BE COMPLETELY REMOVED AS INDICATED, OR REQUIRED FOR FOR COMPLETION OF WORK.
3. ITEMS INDICATED TO BE REMOVED SHALL BE REMOVED BY THE CONTRACTOR PRIOR TO COMMENCING NEW WORK ON AFFECTED AREAS. ITEMS REMOVED SHALL REMAIN PROPERTY OF CONTRACTOR AND SHALL BE DISPOSED OF OFFSITE, UNLESS OTHERWISE NOTED TO BE RELOCATED, REUSED, PRESERVED, OR TO REMAIN AS PROPERTY OF THE OWNER.
4. CONTRACTOR SHALL SALVAGE ALL SUITABLE GRANITE CURBING AND BRICK PAVERS REMOVED FROM WITHIN THE CONSTRUCTION AREA AND RESET IT AS PART OF THE PROJECT WHERE PRACTICABLE. REUSE OF GRANITE CURBING SHALL BE DONE IN SUCH A WAY AS TO AVOID UNNECESSARY TRANSITIONS BETWEEN NEW AND RESET CURB. OWNER RESERVES THE RIGHT TO REJECT CURBING IN POOR CONDITION FROM REUSE.

   ALL BRICK PAVERS AND GRANITE CURBING NOT REUSED AS PART OF THE PROJECT SHALL BE STOCKPILED BY CONTRACTOR AT THE WESTBROOK PUBLIC WORKS GARAGE AT 371 SACO STREET. CONTRACTOR SHALL TAKE PRECAUTIONS AS NECESSARY WHEN HANDLING CURBING TO AVOID BREAKAGE.
5. CONTRACTOR SHALL COORDINATE REMOVALS WITH OWNER, CITY AND TENANTS. CERTAIN PORTIONS OF THE SITE MAY BE DEVELOPED OR PHASED.
6. ALL ITEMS NOT INDICATED TO BE REMOVED SHALL REMAIN, UNLESS OTHERWISE INDICATED OR DIRECTED BY OWNER.
7. EXISTING UTILITIES ABANDONED OR PARTIALLY REMOVED OR COMPLETELY REMOVED SHALL BE PERMANENTLY CAPPED, PLUGGED, TERMINATED, ALTERED IN ACCORDANCE WITH UTILITY COMPANIES STANDARDS OR RECOMMENDATIONS.
8. ALL LOAM IS PROPERTY OF THE OWNER AND SHALL NOT BE REMOVED FROM THE PROPERTY WITHOUT PERMISSION.
9. MAINTAIN SAFE CONDITIONS AND BUILDING ACCESS AT ALL TIMES– COORDINATE WITH CITY AND TENANTS.
10. ALL SIGNS INDICATED TO BE REMOVED OR RELOCATED INCLUDING SIGNS MOUNTED TO LIGHT POLES SHALL BE REMOVED AND SALVAGED FOR REUSE. ALL SIGNS AND POSTS NOT REQUIRED FOR REUSE/RELOCATION AS PART OF THE PROJECT SHALL RETURNED BY THE CONTRACTOR TO WESTBROOK PUBLIC WORKS GARAGE AT 371 SACO STREET. REMOVAL OF SIGNS PAID UNDER ITEM 645.106. RELOCATION/REINSTALLATION AND INSTALLATION AND INSTALLATION OF NEW SIGNS PAID UNDER ITEM 645.116. REMOVAL OF FLAG POLES, BANNERS, BRACKETS, ETC FROM LIGHT POLE IS INCIDENTAL TO REMOVAL OF POLES. ALL SUCH ATTACHMENTS SHALL BE RETURNED TO CITY.
11. SAW CUTTING AND PAVEMENT & PAVEMENT REPAIR ARE INCIDENTAL TO CURB INSTALLATION.
12. THESE NOTES SHALL APPLY TO ALL PLAN SHEETS OF THE EXISTING CONDITIONS & REMOVALS PLAN SET.
13. SEE MAINEDOT PLANS FOR EXISTING UTILITIES AND RELOCATIONS.
14. SEE MAINEDOT DEMOLITION PLAN FOR OTHER REMOVAL AREAS.
15. SEE MAINEDOT LIGHTING PLAN FOR REMOVALS, RELOCATION & NEW LIGHTING.
16. THE CLEARING LIMITS AS SHOWN ON THE PLANS ARE APPROXIMATE. THE EXACT LIMITS WILL BE ESTABLISHED IN THE FIELD BY THE RESIDENT. PAYMENT FOR CLEARING WILL BE CONSIDERED INCIDENTAL TO RELATED CONTRACT ITEMS.
17. A MAINE DEPARTMENT OF ENVIRONMENTAL PROTECTION (MDEP) DATABASE REVIEW INDICATED A BROWNFIELD SITE IN THE SACCARAPPA PARK AND BRIDGE STREET SPUR AREA. THE CONTRACTOR SHALL REMAIN ALERT FOR ANY ADDITIONAL EVIDENCE OF SOIL OR GROUNDWATER CONTAMINATION. IF THE CONTRACTOR ENCOUNTERS EVIDENCE OF SOIL OR GROUNDWATER CONTAMINATION, THE CONTRACTOR SHALL SECURE THE EXCAVATION, STOP WORK IN THE CONTAMINATED AREA, AND IMMEDIATELY NOTIFY THE RESIDENT. THE RESIDENT SHALL CONTACT THE HYDROGEOLOGIST IN MDOT'S ENVIRONMENTAL OFFICE AT 207-624-3100 AND THE MAINE DEPARTMENT OF ENVIRONMENTAL PROTECTION AT 800-482-0777. WORK MAY ONLY CONTINUE WITH AUTHORIZATION FROM THE RESIDENT. SEE SPECIAL PROVISION SECTION 203 FOR MORE DETAILS.

Stantec Consulting Services Inc.
482 Payne Road, Scarborough ME. 04074
Tel. 207.883.3355 Fax. 207.883.3376 www.stantec.com

Project No. 21080963

Scale (AS NOTED)

CITY OF WESTBROOK

STATE OF MAINE
PATRICK L. CLARK
No. 5749
LICENSED
PROFESSIONAL ENGINEER

	BY	DATE
DESIGN-DETAILED	PLC	OCT2013
CHECKED-REVIEWED	TNE	OCT2013
DESIGN2-DETAILED2	DMG	OCT2013
DESIGN3-DETAILED3		
REVISIONS 1		
REVISIONS 2		
REVISIONS 3		
REVISIONS 4		
FIELD CHANGES		

SIGNATURE

P.E. NUMBER 5749

DATE OCTOBER 11, 2013

HEART OF DOWNTOWN STREETSCAPE IMPROVEMENTS

EXISTING CONDITIONS AND REMOVALS (SHEET 1 of 2)

SHEET NUMBER

C-1

03 OF 24

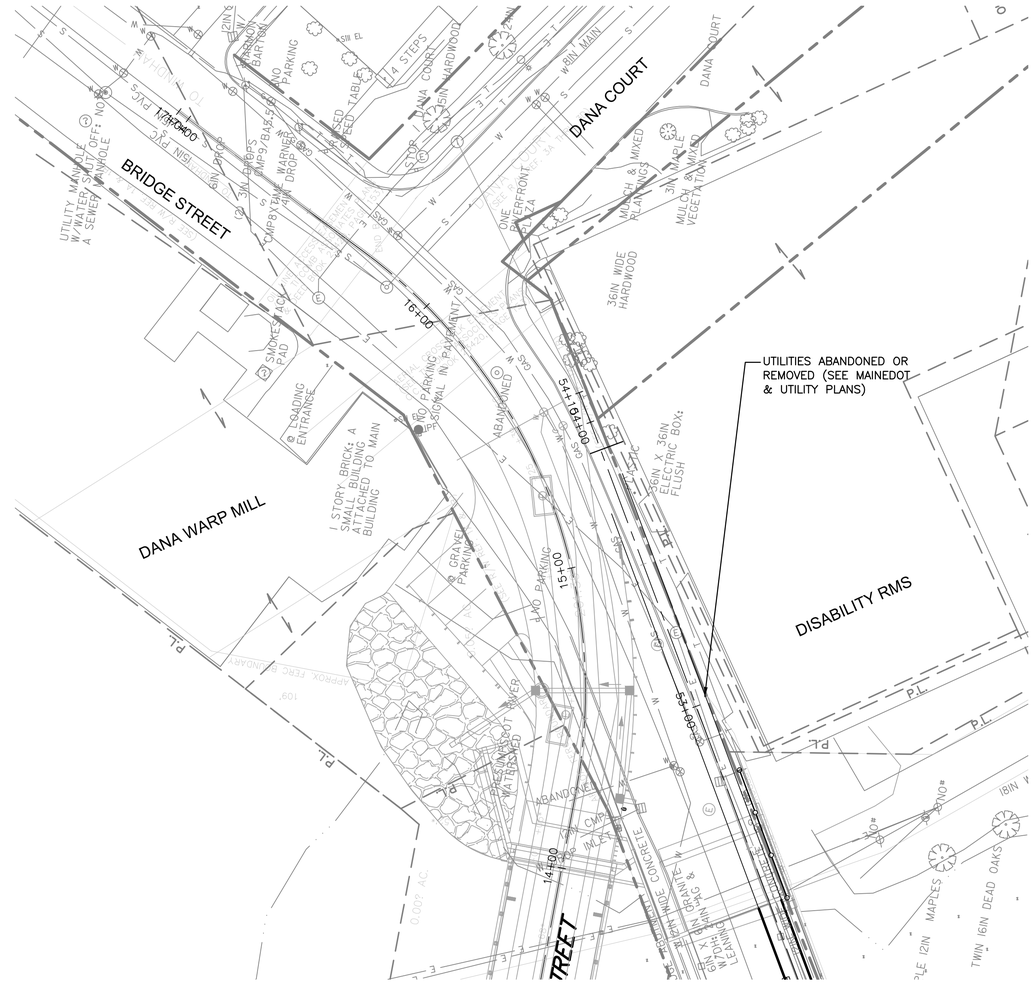

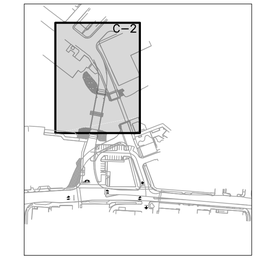

KEY MAP

0 300' 600'

NOTES:

1. SEE DEMOLITION NOTES C-1
2. SEE NOTES COVER SHEET C-0
3. SEE MAINEDOT PLANS FOR REMOVALS AND LIMIT OF WORK FOR BRIDGE PROJECT

N

PLAN

25 0 25 50

Scale of Feet

Stantec Consulting Services Inc.
482 Payne Road, Scarborough ME. 04074
Tel. 207.883.3355 Fax. 207.883.3376 www.stantec.com

Project No. 210800963

Scale (AS NOTED)

CITY OF WESTBROOK

STATE OF MAINE
PATRICK L. CLARK
No. 5749
LICENSED
PROFESSIONAL ENGINEER

	BY	DATE
DESIGN-DETAILED	PLC	9/5/14
CHECKED-REVIEWED	TWM	9/5/14
DESIGN2-DETAILED2	DMG	9/5/14
DESIGN3-DETAILED3		
REVISIONS 1		
REVISIONS 2		
REVISIONS 3		
REVISIONS 4		
FIELD CHANGES		

SIGNATURE

P.E. NUMBER 5749

DATE SEPTEMBER 5, 2014

HEART OF DOWNTOWN STREETSCAPE IMPROVEMENTS

EXISTING CONDITIONS AND REMOVALS (SHEET 2 of 2)

SHEET NUMBER

C-2

04 OF 24

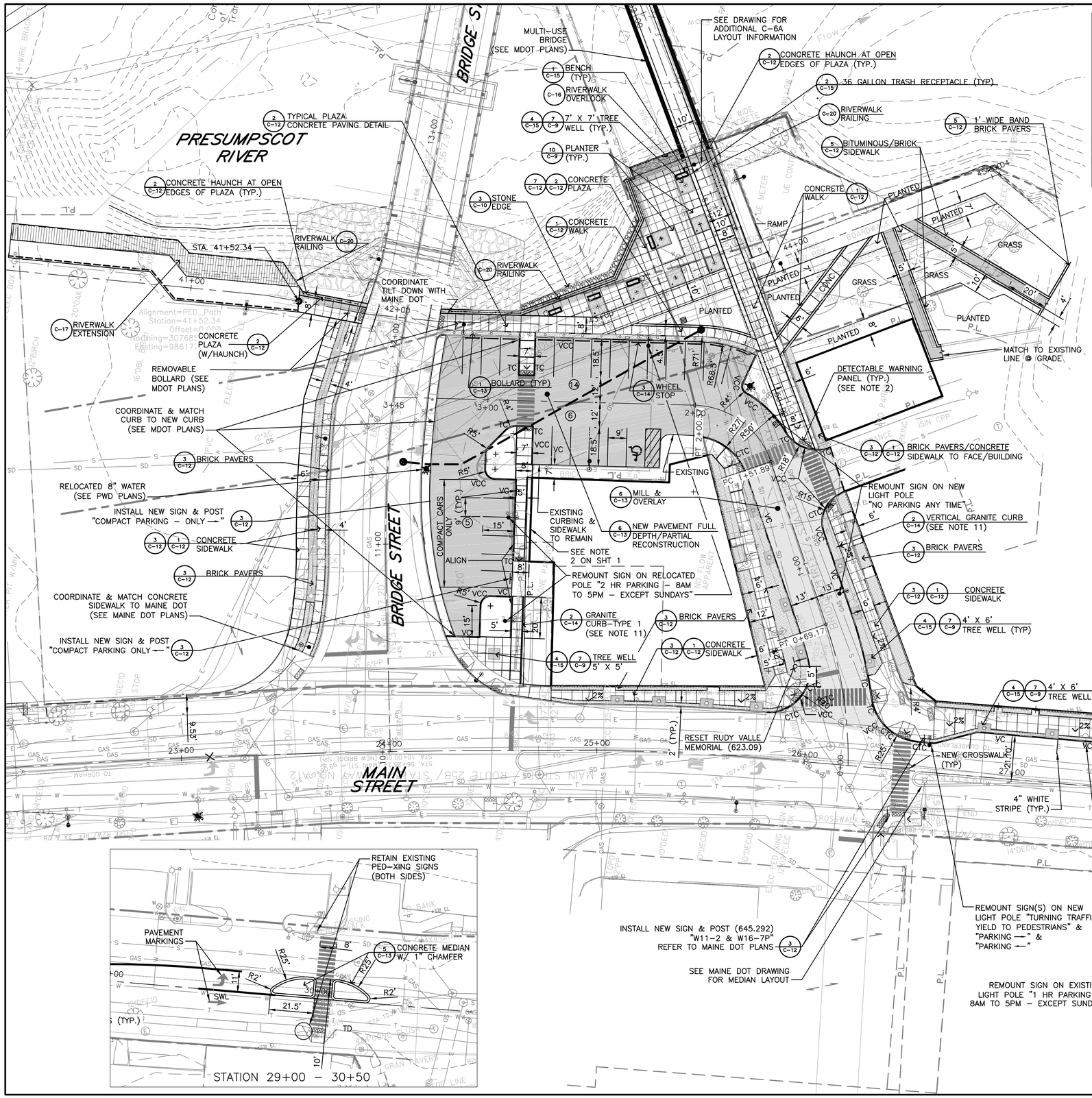

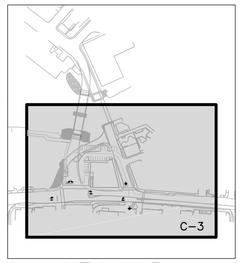

KEY MAP

0 300' 600'

CURB ABBREVIATIONS:

VC – VERTICAL GRANITE CURB
VCC – VERTICAL CIRCULAR CURB
TC – TIP DOWN/TERMINAL CURB
CTC – CIRCULAR TIP DOWN/ TERMINAL CURB

NOTES:

1. THE CONTRACTOR SHALL BE RESPONSIBLE TO RECLAIM OR PROPERLY DISPOSE OF ALL REMOVED BITUMINOUS MATERIALS.
2. ALL SIDEWALKS SHALL INCLUDE HC ACCESSIBLE RAMPS WITH TACTILE WARNING AT ALL INTERSECTIONS, CROSSWALKS, & DRIVEWAYS.
3. REFER TO DETAIL SHEETS FOR LANDSCAPE PRESERVATION AND MAINTENANCE NOTES.
4. THESE NOTES SHALL APPLY TO ALL OF THE LAYOUT PLANS.
5. SEE SHEET C-1 FOR DEMOLITION NOTES.
6. SEE MAINEDOT PLANS FOR UTILITY REMOVAL & RELOCATION.
7. SEE MAINEDOT LIGHTING PLAN FOR REMOVALS, RELOCATION & NEW LIGHTING.
8. ALL WORK SHALL BE DONE IN ACCORDANCE WITH THE MAINE DEPARTMENT OF TRANSPORTATION'S BEST MANAGEMENT POLICIES FOR EROSION CONTROL AND SEDIMENT CONTROL, FEBRUARY 2008.
9. REFER TO MAINEDOT DRAWING GENERAL NOTES, SHEET #3.
10. REFER TO GENERAL NOTES ON COVER SHEET.
11. ALL CURBING SHALL BE TYPE 1 GRANITE. SEE NOTE 4/C-1. SALVAGED CURB SHALL BE USED FOR INSTALLATION OF GRANITE CURB (TYPE 1-VERTICAL) BASED ON AVAILABILITY OF SUITABLE CURB STOCKPILE.
12. ALL JOINTS IN THE GRANITE CURB SHALL BE SEALED FROM BEHIND BY A METHOD APPROVED BY THE RESIDENT.
13. SEE MAINE DOT SHT 4 AND SHT 67 FOR ALIGNMENT PROFILES.
14. CONTRACTOR SHALL MAINTAIN A MINIMUM OF 12 PARKING SPACES WITHIN THE EXISTING PARKING LOT AND BRIDGE STREET SPUR LIMITS AND COORDINATE WITH THE CITY TO PROVIDE ADDITIONAL TEMPORARY PARKING SPACES ON THE MAIN STREET FRONTAGE OF THE SCACCARAPPA PARK OR SOME OTHER CITY DESIGNATED AREA.

LEGEND

EXISTING		PROPOSED
	GRANITE CURB	
SS	SANITARY SEWER	SS
SD	STORM DRAIN	SD
GAS	GAS	GAS
W	WATER MAIN (P)=POTABLE,(F)=FIRE	W
OHW	OVERHEAD WIRE	OHW
	UNDERGRND ELEC, TELEPHONE & CATV	E
	UTILITY POLE	
	CATCH BASIN	
	MANHOLE	
	HYDRANT	
	GATE VALVE	
	TRANSFORMER	
	SIDEWALK RAMP	
	EROSION CONTROL MATTING	
	AREA LIGHT	
	STREET LIGHT	A
	RIVERWALK RAILING	
	RIGHT OF WAY	
PL	PROPERTY LINE	

NOTES:

1. REMOVE EXISTING FOUNDATION AND INTERCEPT EXISTING CONDUITS AND WIRING. RELOCATE SHOEBOX FIXTURE TO NEW LOCATION.
2. INSTALL NEW FOUNDATION, MATCH EXISTING BASE PATTERNS AND EXTEND WIRE AND 2" CONDUIT. REINSTALL FIXTURE.
3. EXTEND/RECONNECT CONDUIT AND WIRE AS REQUIRED TO CONTINUE EXISTING CIRCUIT.
4. LOCATE CENTER OF NEW POLE 3.5' FROM FACE OF NEW CURB.

Stantec Consulting Services Inc.
482 Payne Road, Scarborough ME. 04074
Tel. 207.883.3355 Fax. 207.883.3376 www.stantec.com

Project No. 21080963 | Scale (AS NOTED)

CITY OF WESTBROOK

STATE OF MAINE
PATRICK L. CLARK
No. 5749
LICENSED
PROFESSIONAL ENGINEER

	DATE	BY
DESIGN-DETAILED	OCT2013	PLC
CHECKED-REVIEWED	OCT2013	TNE
DRAWING	OCT2013	DMG
REVISIONS 1		
REVISIONS 2		
REVISIONS 3		
REVISIONS 4		
FIELD CHANGES		

SIGNATURE

P.E. NUMBER 5749

DATE OCTOBER 11, 2013

HEART OF DOWNTOWN STREETSCAPE IMPROVEMENTS

SITE LAYOUT AND UTILITIES (SHEET 1 of 2)

SHEET NUMBER

C-3

05 OF 24

NOTES:

1. SEE NOTES SHEET C-3.
2. SEE NOTES/LEGEND C-0.

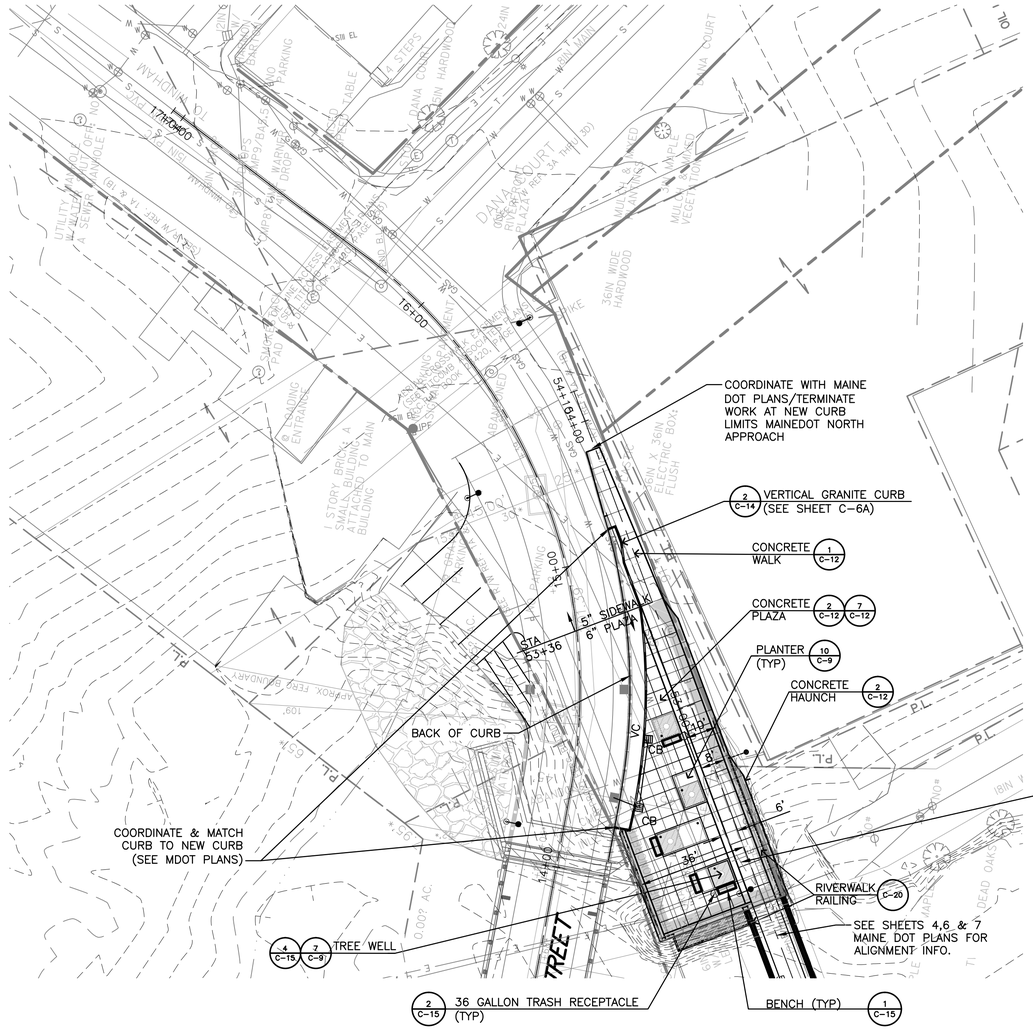

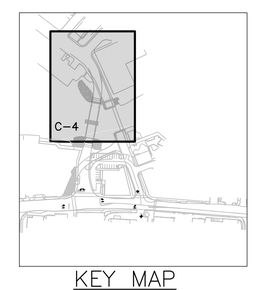

KEY MAP

0 300' 600'

PLAN

25 0 25 50

Scale of Feet

Stantec Consulting Services Inc.
482 Payne Road, Scarborough ME. 04074
Tel. 207.883.3355 Fax. 207.883.3376 www.stantec.com

Project No. 210800963

Scale (AS NOTED)

CITY OF WESTBROOK

STATE OF MAINE
PATRICK L. CLARK
No. 5749
LICENSED
PROFESSIONAL ENGINEER

	BY	DATE
DESIGN-DETAILED	PLC	9/5/14
CHECKED-REVIEWED	TWM	9/5/14
DESIGN2-DETAILED2	DMG	9/5/14
DESIGN3-DETAILED3		
REVISIONS 1		
REVISIONS 2		
REVISIONS 3		
REVISIONS 4		
FIELD CHANGES		

SIGNATURE

P.E. NUMBER 5749

DATE SEPTEMBER 5, 2014

HEART OF DOWNTOWN STREETSCAPE IMPROVEMENTS

SITE LAYOUT AND UTILITIES (SHEET 2 of 2)

SHEET NUMBER

C-4

06 OF 24

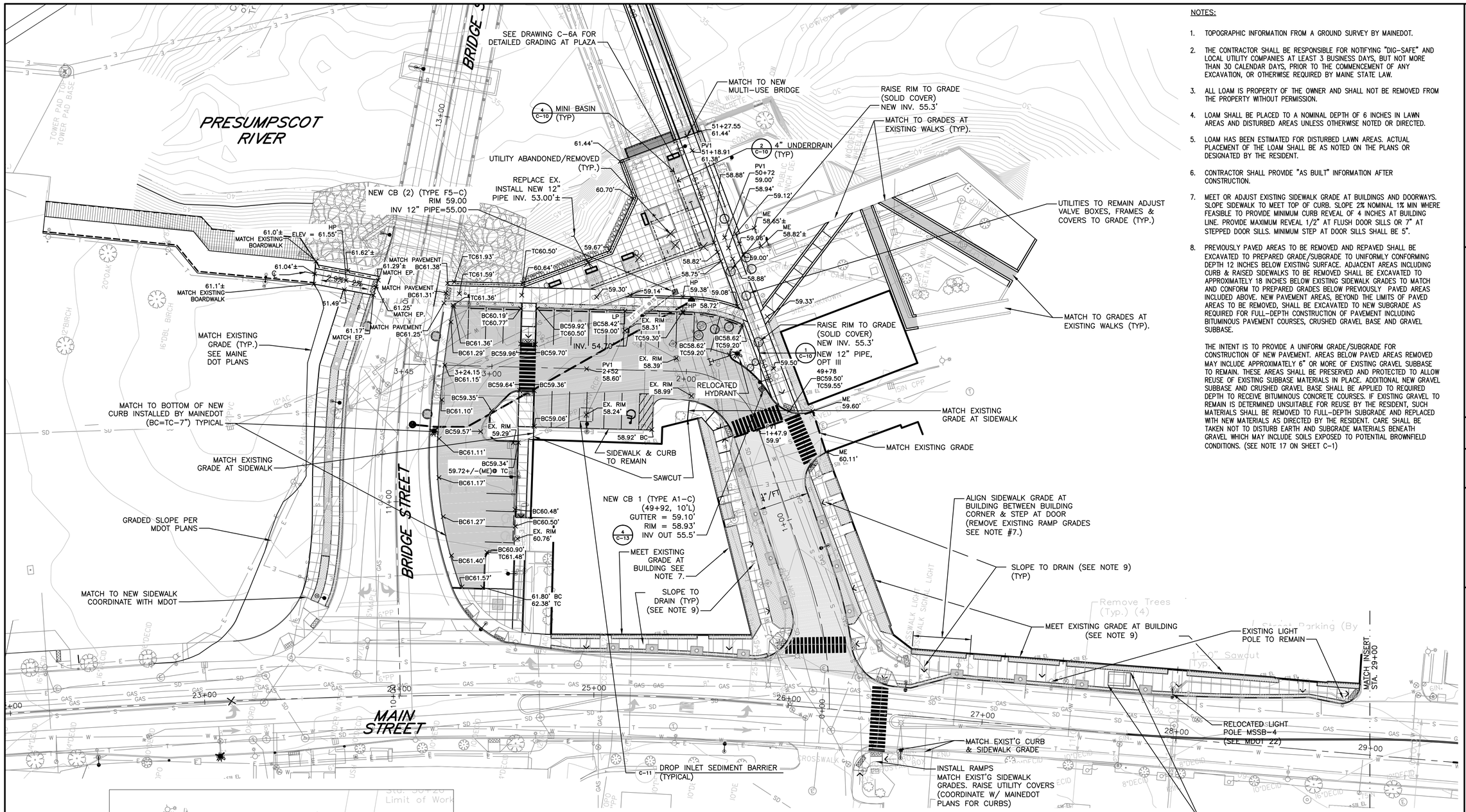

NOTES:

1. TOPOGRAPHIC INFORMATION FROM A GROUND SURVEY BY MAINEDOT.
2. THE CONTRACTOR SHALL BE RESPONSIBLE FOR NOTIFYING "DIG-SAFE" AND LOCAL UTILITY COMPANIES AT LEAST 3 BUSINESS DAYS, BUT NOT MORE THAN 30 CALENDAR DAYS, PRIOR TO THE COMMENCEMENT OF ANY EXCAVATION, OR OTHERWISE REQUIRED BY MAINE STATE LAW.
3. ALL LOAM IS PROPERTY OF THE OWNER AND SHALL NOT BE REMOVED FROM THE PROPERTY WITHOUT PERMISSION.
4. LOAM SHALL BE PLACED TO A NOMINAL DEPTH OF 6 INCHES IN LAWN AREAS AND DISTURBED AREAS UNLESS OTHERWISE NOTED OR DIRECTED.
5. LOAM HAS BEEN ESTIMATED FOR DISTURBED LAWN AREAS. ACTUAL PLACEMENT OF THE LOAM SHALL BE AS NOTED ON THE PLANS OR DESIGNATED BY THE RESIDENT.
6. CONTRACTOR SHALL PROVIDE "AS BUILT" INFORMATION AFTER CONSTRUCTION.
7. MEET OR ADJUST EXISTING SIDEWALK GRADE AT BUILDINGS AND DOORWAYS. SLOPE SIDEWALK TO MEET TOP OF CURB. SLOPE 2% NOMINAL 1% MIN WHERE FEASIBLE TO PROVIDE MINIMUM CURB REVEAL OF 4 INCHES AT BUILDING LINE. PROVIDE MAXIMUM REVEAL 1/2" AT FLUSH DOOR SILLS OR 7" AT STEPPED DOOR SILLS. MINIMUM STEP AT DOOR SILLS SHALL BE 5".
8. PREVIOUSLY PAVED AREAS TO BE REMOVED AND REPAVED SHALL BE EXCAVATED TO PREPARED GRADE/SUBGRADE TO UNIFORMLY CONFORMING DEPTH 12 INCHES BELOW EXISTING SURFACE. ADJACENT AREAS INCLUDING CURB & RAISED SIDEWALKS TO BE REMOVED SHALL BE EXCAVATED TO APPROXIMATELY 18 INCHES BELOW EXISTING SIDEWALK GRADES TO MATCH AND CONFORM TO PREPARED GRADES BELOW PREVIOUSLY PAVED AREAS INCLUDED ABOVE. NEW PAVEMENT AREAS, BEYOND THE LIMITS OF PAVED AREAS TO BE REMOVED, SHALL BE EXCAVATED TO NEW SUBGRADE AS REQUIRED FOR FULL-DEPTH CONSTRUCTION OF PAVEMENT INCLUDING BITUMINOUS PAVEMENT COURSES, CRUSHED GRAVEL BASE AND GRAVEL SUBBASE.

   THE INTENT IS TO PROVIDE A UNIFORM GRADE/SUBGRADE FOR CONSTRUCTION OF NEW PAVEMENT. AREAS BELOW PAVED AREAS REMOVED MAY INCLUDE APPROXIMATELY 6" OR MORE OF EXISTING GRAVEL SUBBASE TO REMAIN. THESE AREAS SHALL BE PRESERVED AND PROTECTED TO ALLOW REUSE OF EXISTING SUBBASE MATERIALS IN PLACE. ADDITIONAL NEW GRAVEL SUBBASE AND CRUSHED GRAVEL BASE SHALL BE APPLIED TO REQUIRED DEPTH TO RECEIVE BITUMINOUS CONCRETE COURSES. IF EXISTING GRAVEL TO REMAIN IS DETERMINED UNSUITABLE FOR REUSE BY THE RESIDENT, SUCH MATERIALS SHALL BE REMOVED TO FULL-DEPTH SUBGRADE AND REPLACED WITH NEW MATERIALS AS DIRECTED BY THE RESIDENT. CARE SHALL BE TAKEN NOT TO DISTURB EARTH AND SUBGRADE MATERIALS BENEATH GRAVEL WHICH MAY INCLUDE SOILS EXPOSED TO POTENTIAL BROWNFIELD CONDITIONS. (SEE NOTE 17 ON SHEET C-1)

LEGEND

EXISTING		PROPOSED
	CONTOUR	125
	SPOT GRADE	X
	ROADWAY CENTERLINE	

ABBREVIATIONS:
BC – BOTTOM OF CURB
TC – TOP OF CURB
CONC – CONCRETE
TYP – TYPICAL
ME – MATCH EXISTING
MIN – MINIMUM
SHT – SHEET
OPT – OPTION

KEY MAP

0 300' 600'

N

PLAN

25 0 25 50
Scale of Feet

Stantec Consulting Services Inc.
482 Payne Road, Scarborough ME. 04074
Tel. 207.883.3355 Fax. 207.883.3376 www.stantec.com

Project No. 21080963
Scale (AS NOTED)

CITY OF WESTBROOK

STATE OF MAINE
PATRICK L. CLARK
No. 5749
LICENSED
PROFESSIONAL ENGINEER

	BY	DATE
DESIGN-DETAILED	PLC	OCT2013
CHECKED-REVIEWED	TNE	OCT2013
DESIGN2-DETAILED2		
DESIGN3-DETAILED3		
REVISIONS 1		
REVISIONS 2		
REVISIONS 3		
REVISIONS 4		
FIELD CHANGES		

SIGNATURE
P.E. NUMBER 5749
DATE OCTOBER 11, 2013

HEART OF DOWNTOWN STREETSCAPE IMPROVEMENTS

SITE GRADING AND DRAINAGE (SHEET 1 of 2)

SHEET NUMBER
C-5
07 OF 24

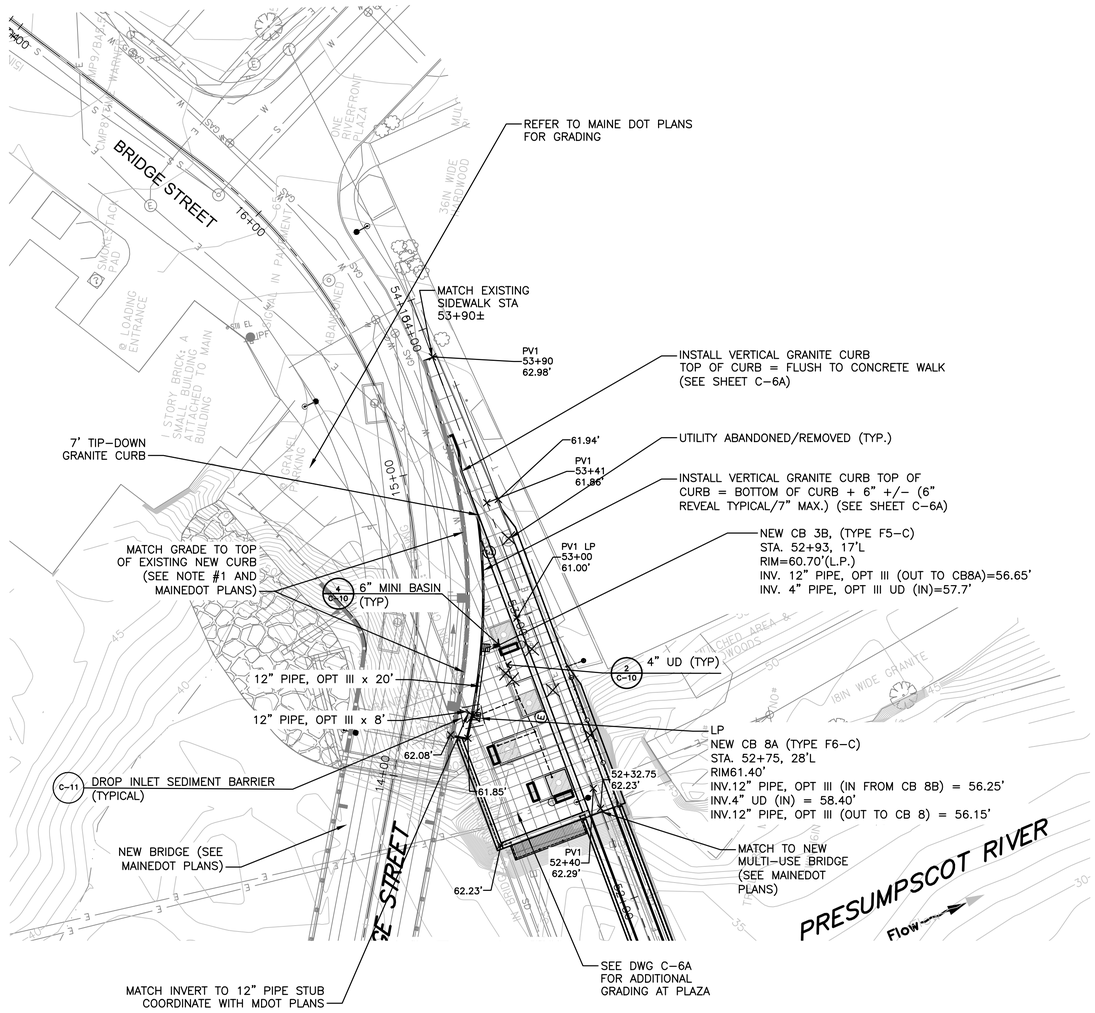

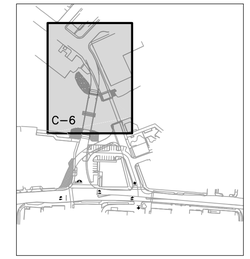

KEY MAP

0 300' 600'

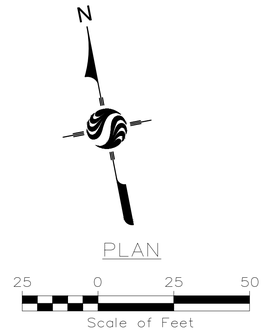

NOTES:

1. CURB AT NEW BRIDGE STREET INSTALLED PER MAINE DOT PLANS TO INCLUDE SHOULDER SLOPE GRADES TO 3 FEET BEYOND CURB.
2. SEE SHEET C-5.
3. SEE C-O COVER SHEET

Stantec Consulting Services Inc.
482 Payne Road, Scarborough ME. 04074
Tel. 207.883.3355 Fax. 207.883.3376 www.stantec.com

Project No. 210800963

Scale (AS NOTED)

CITY OF WESTBROOK

STATE OF MAINE
PATRICK L. CLARK
No. 5749
LICENSED
PROFESSIONAL ENGINEER

	BY	DATE
DESIGN-DETAILED	PLC	9/5/14
CHECKED-REVIEWED	TWM	9/5/14
DESIGN2-DETAILED2	DMG	9/5/14
DESIGN3-DETAILED3		
REVISIONS 1		
REVISIONS 2		
REVISIONS 3		
REVISIONS 4		
FIELD CHANGES		

SIGNATURE

P.E. NUMBER 5749

DATE SEPTEMBER 5, 2014

HEART OF DOWNTOWN STREETSCAPE IMPROVEMENTS

SITE GRADING AND DRAINAGE (SHEET 2 of 2)

SHEET NUMBER

C-6

SOUTH PLAZA POINT TABLE			
PNT#	ELEV*	NORTHING	EASTING
60	62.23	307719.95	986386.70
61	62.23	307719.31	986382.84
62	61.44	307718.65	986378.89
63	61.44	307718.00	986374.94
64	61.44	307712.94	986344.57
65	61.44	307712.61	986342.60
66	60.66	307691.99	986348.06
67	59.62	307666.44	986329.80
68	60.54	307658.35	986281.24
69	62.23	307666.73	986243.49
70	61.38	307668.61	986244.24
71	60.50	307660.39	986281.29
72	62.23	307659.19	986240.54
73	59.20	307650.24	986317.76
74	59.41	307655.40	986318.46
75	59.26	307658.71	986338.19
76	59.19	307662.00	986357.91
77	59.14	307665.28	986377.64
78	60.12	307681.72	986354.63
79	60.17	307685.01	986374.36
80	61.05	307704.74	986371.07
81	60.30	307685.68	986357.44
82	61.20	307708.70	986373.88
83	60.35	307688.97	986377.17
84	59.33	307669.31	986380.44
85	59.33	307665.96	986360.73
86	59.40	307662.67	986341.00
87	59.02	307664.28	986395.97
88	58.75	307652.13	986383.89
89	59.14	307643.93	986334.66
90	59.38	307637.25	986364.75
91	59.08	307627.93	986387.92
92	59.13	307625.15	986390.41
93	59.21	307618.84	986391.46

SOUTH PLAZA POINT TABLE			
PNT#	ELEV*	NORTHING	EASTING
94	59.21	307617.73	986389.61
95	59.30	307641.52	986320.16
96	59.38	307642.09	986317.55
97	59.34	307615.81	986400.07
98	59.27	307622.81	986398.91
99	59.30	307646.17	986317.66
100	62.23	307662.96	986242.01
101	59.01	307662.39	986375.53
102	60.04	307682.11	986372.24
103	60.96	307701.84	986368.95
104	60.00	307678.83	986352.51
105	59.09	307659.07	986355.81
106	59.18	307655.84	986336.16
107	59.33	307652.52	986316.43
108	61.37	307710.96	986344.90
109	61.43	307716.02	986375.27
110	60.70	307692.48	986345.95
111	59.67	307668.27	986328.66
112	61.25	307657.30	986239.82
113	61.84	307655.85	986244.08
114	59.97	307630.51	986275.15
115	59.74	307628.99	986281.98
116	60.71	307650.52	986279.59
117	60.47	307649.00	986286.43
118	59.25	307641.07	986357.81
119	62.23	307583.62	986392.00
120	59.33	307607.58	986394.92
121	62.23	307626.53	986328.61
122	59.24	307603.98	986383.08
123	59.20	307605.84	986380.23
124	62.23	307601.11	986380.80
125	62.23	307579.28	986395.82
126	62.23	307567.84	986415.35
127	59.30	307629.93	986363.12

SOUTH PLAZA POINT TABLE			
PNT#	ELEV*	NORTHING	EASTING
128	59.20	307618.09	986389.13
129	60.49	307646.94	986286.48
130	60.76	307648.68	986278.67
131	59.14	307643.49	986332.02
132	59.37	307636.27	986364.53
133	59.10	307626.62	986388.13
134	61.43	307715.69	986373.30
135	59.51	307659.36	986321.27
136	59.02	307655.09	986395.56
137	59.10	307662.98	986394.24
138	59.11	307663.96	986394.08
139	62.23	307568.12	986408.01
140	62.23	307573.79	986398.96
141	61.69	307656.45	986248.28
142	61.42	307654.53	986256.92
143	61.15	307652.58	986265.71
144	60.88	307650.63	986274.50
145	60.32	307646.94	986291.09
146	60.02	307644.99	986299.88
147	59.71	307643.04	986308.66
148	59.41	307641.09	986317.45
149	59.18	307639.14	986326.24
150	59.06	307637.19	986335.02
151	59.14	307635.24	986343.81
152	59.22	307633.29	986352.59
153	59.30	307631.34	986361.38
154	59.26	307628.12	986372.72
155	59.19	307622.20	986384.87
173	59.74	307584.97	986354.25
174	0.00	307574.84	986351.27
175	0.00	307586.89	986273.20
176	0.00	307580.53	986271.74

SOUTH RAILING POINT TABLE			
PNT#	ELEV*	NORTHING	EASTING
156	0.00	307666.57	986248.84
157	60.52	307659.37	986281.26
158	59.64	307667.36	986329.23
159	60.68	307692.26	986347.02
160	61.40	307711.79	986343.75
161	61.40	307712.45	986347.70
162	0.00	307717.87	986346.79
163	0.00	307721.88	986370.89
164	61.43	307716.46	986371.80
165	61.43	307716.72	986373.40

1. COORDINATES ARE FOR POINTS ALONG CENTERLINE OF POSTS.
2. COORDINATES WITH 0.00 ELEVATIONS JUST HAVE NORTHING AND EASTING VALUES.

SOUTH PLAZA LAYOUT PLAN

0 10' 20'

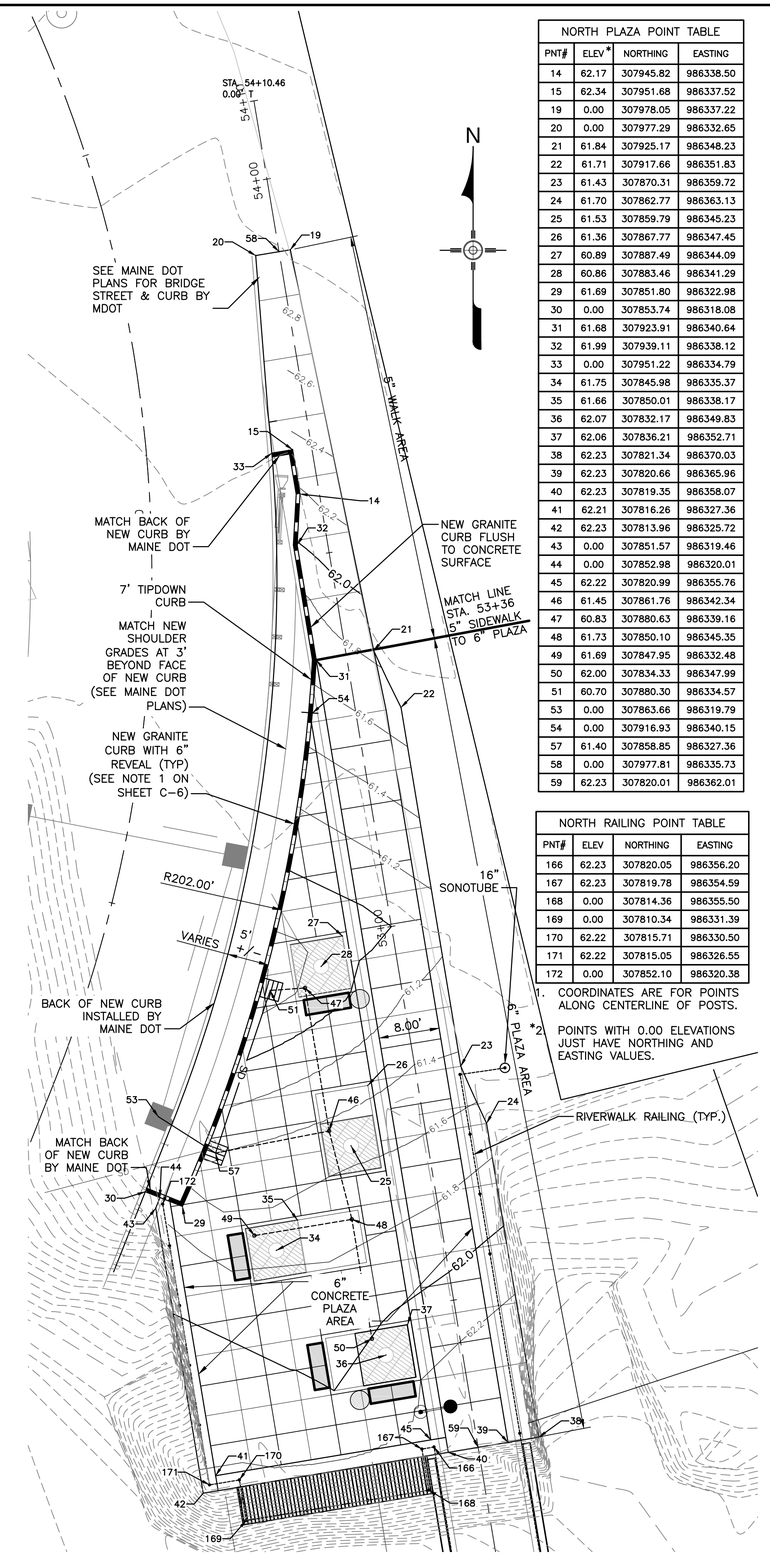

NORTH PLAZA LAYOUT PLAN

0 10' 20'

NORTH PLAZA POINT TABLE			
PNT#	ELEV*	NORTHING	EASTING
14	62.17	307945.82	986338.50
15	62.34	307951.68	986337.52
19	0.00	307978.05	986337.22
20	0.00	307977.29	986332.65
21	61.84	307925.17	986348.23
22	61.71	307917.66	986351.83
23	61.43	307870.31	986359.72
24	61.70	307862.77	986363.13
25	61.53	307859.79	986345.23
26	61.36	307867.77	986347.45
27	60.89	307887.49	986344.09
28	60.86	307883.46	986341.29
29	61.69	307851.80	986322.98
30	0.00	307853.74	986318.08
31	61.68	307923.91	986340.64
32	61.99	307939.11	986338.12
33	0.00	307951.22	986334.79
34	61.75	307845.98	986335.37
35	61.66	307850.01	986338.17
36	62.07	307832.17	986349.83
37	62.06	307836.21	986352.71
38	62.23	307821.34	986370.03
39	62.23	307820.66	986365.96
40	62.23	307819.35	986358.07
41	62.21	307816.26	986327.36
42	62.23	307813.96	986325.72
43	0.00	307851.57	986319.46
44	0.00	307852.98	986320.01
45	62.22	307820.99	986355.76
46	61.45	307861.76	986342.34
47	60.83	307880.63	986339.16
48	61.73	307850.10	986345.35
49	61.69	307847.95	986332.48
50	62.00	307834.33	986347.99
51	60.70	307880.30	986334.57
53	0.00	307863.66	986319.79
54	0.00	307916.93	986340.15
57	61.40	307858.85	986327.36
58	0.00	307977.81	986335.73
59	62.23	307820.01	986362.01

NORTH RAILING POINT TABLE			
PNT#	ELEV	NORTHING	EASTING
166	62.23	307820.05	986356.20
167	62.23	307819.78	986354.59
168	0.00	307814.36	986355.50
169	0.00	307810.34	986331.39
170	62.22	307815.71	986330.50
171	62.22	307815.05	986326.55
172	0.00	307852.10	986320.38

1. COORDINATES ARE FOR POINTS ALONG CENTERLINE OF POSTS.

POINTS WITH 0.00 ELEVATIONS JUST HAVE NORTHING AND EASTING VALUES.

Stantec Consulting Services Inc.
482 Payne Road, Scarborough ME. 04074
Tel. 207.883.3355 Fax. 207.883.3376 www.stantec.com

Project No. 21800963

Scale (AS NOTED)

CITY OF WESTBROOK

STATE OF MAINE
PATRICK L. CLARK
No. 5749
LICENSED
PROFESSIONAL ENGINEER

	BY	DATE
DESIGN-DETAILED	PLC	OCT2013
CHECKED-REVIEWED	TNE	OCT2013
DESIGN2-DETAILED2	DMG	OCT2013
DESIGN3-DETAILED3		
REVISIONS 1		
REVISIONS 2		
REVISIONS 3		
REVISIONS 4		
FIELD CHANGES		

SIGNATURE

P.E. NUMBER 5749

DATE OCTOBER 11, 2013

HEART OF DOWNTOWN STREETSCAPE IMPROVEMENTS

NORTH & SOUTH PLAZAS
DETAILED LAYOUT AND GRADING

SHEET NUMBER

C-6A

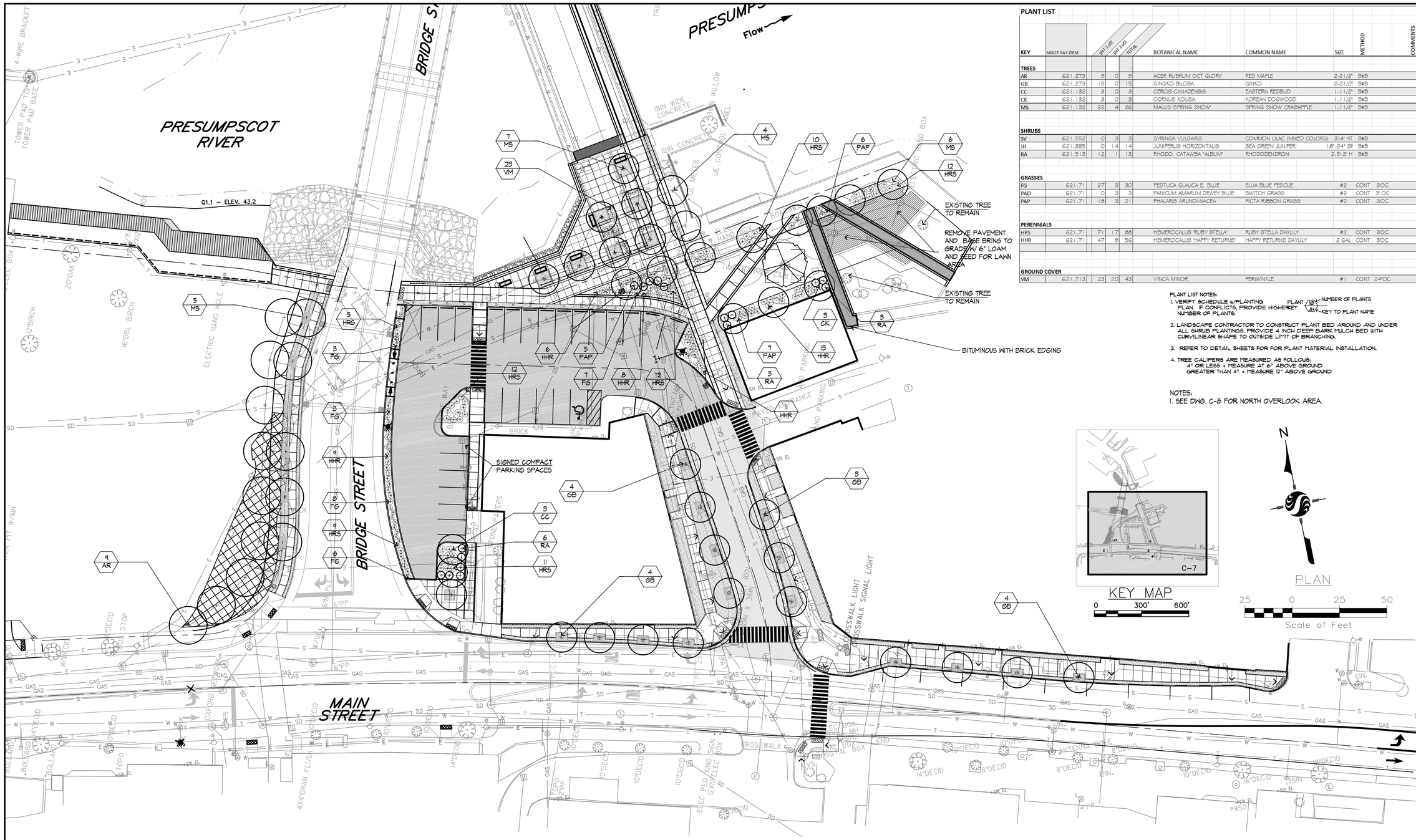

PLANT LIST

KEY	MDOT PAY ITEM	SHT 1 of 2	SHT 2 of 2	TOTAL	BOTANICAL NAME	COMMON NAME	SIZE	METHOD	COMMENTS
TREES									
AR	621.273	9	0	9	ACER RUBRUM OCT GLORY	RED MAPLE	2-2 1/2"	B&B	
GB	621.273	15	0	15	GINGKO BILOBA	GINKO	2-2 1/2"	B&B	
CC	621.132	3	0	3	CERCIS CANADENSIS	EASTERN REDBUD	1-1 1/2"	B&B	
CK	621.132	3	0	3	CORNUS KOUSA	KOREAN DOGWOOD	1-1 1/2"	B&B	
MS	621.132	22	4	26	MALUS 'SPRING SNOW	SPRING SNOW CRABAPPLE	1-1 1/2"	B&B	
SHRUBS									
SV	621.552	0	3	3	SYRINGA VULGARIS	COMMON LILAC (MIXED COLORS)	3'-4' HT	B&B	
JH	621.395	0	14	14	JUNIPERUS HORIZONTALIS	SEA GREEN JUNIPER	18"-24" SF	B&B	
RA	621.513	12	1	13	RHODO. CATAWBA "ALBUM"	RHODODENDRON	2.5'-3' H	B&B	
GRASSES									
FG	621.71	27	3	30	FESTUCA GLAUCA 'E. BLUE'	ELIJA BLUE FESCUE	#2	CONT	3'OC
PAD	621.71	0	3	3	PANICUM AMARUM DEWEY BLUE'	SWITCH GRASS	#2	CONT	3' OC
PAP	621.71	18	3	21	PHALARIS ARUNDI-NACEA	PICTA RIBBON GRASS	#2	CONT	3'OC
PERENNIALS									
HRS	621.71	71	17	88	HEMEROCALLIS 'RUBY STELLA'	RUBY STELLA DAYLILY	#2	CONT	3'OC
HHR	621.71	47	9	56	HEMEROCALLIS 'HAPPY RETURNS'	HAPPY RETURNS DAYLILY	2 GAL	CONT	3'OC
GROUND COVER									
VM	621.713	23	20	43	VINCA MINOR	PERIWINKLE	#1	CONT	24"OC

PLANT LIST NOTES:

1. VERIFY SCHEDULE w/PLANTING PLAN. IF CONFLICTS, PROVIDE HIGHER KEY NUMBER OF PLANTS.
   PLANT (10) – NUMBER OF PLANTS; JH – KEY TO PLANT NAME
2. LANDSCAPE CONTRACTOR TO CONSTRUCT PLANT BED AROUND AND UNDER ALL SHRUB PLANTINGS. PROVIDE 4 INCH DEEP BARK MULCH BED WITH CURVILINEAR SHAPE TO OUTSIDE LIMIT OF BRANCHING.
3. REFER TO DETAIL SHEETS FOR FOR PLANT MATERIAL INSTALLATION.
4. TREE CALIPERS ARE MEASURED AS FOLLOWS:
   4" OR LESS = MEASURE AT 6" ABOVE GROUND
   GREATER THAN 4" = MEASURE 12" ABOVE GROUND

NOTES:

1. SEE DWG. C-8 FOR NORTH OVERLOOK AREA.

Stantec Consulting Services Inc.
482 Payne Road, Scarborough ME. 04074
Tel. 207.883.3355 Fax. 207.883.3376 www.stantec.com

Project No. 21800963

Scale (AS NOTED)

CITY OF WESTBROOK

STATE OF MAINE
PATRICK L. CLARK
No. 5749
LICENSED
PROFESSIONAL ENGINEER

	BY	DATE
DESIGN-DETAILED	TNE	OCT2013
CHECKED-REVIEWED	PLC	OCT2013
DESIGN2-DETAILED2		
DESIGN3-DETAILED3		
REVISIONS 1		
REVISIONS 2		
REVISIONS 3		
REVISIONS 4		
FIELD CHANGES		

SIGNATURE

P.E. NUMBER 5749

DATE SEPTEMBER 5, 2014

HEART OF DOWNTOWN STREETSCAPE IMPROVEMENTS

PLANTING (SHEET 1 of 2)

SHEET NUMBER

C-7

NOTES:
1. SEE SHEET C-7 FOR NOTES AND PLANT LIST
2. COORDINATE ALL WORK WITH MAINEDOT PROJECT PLANS

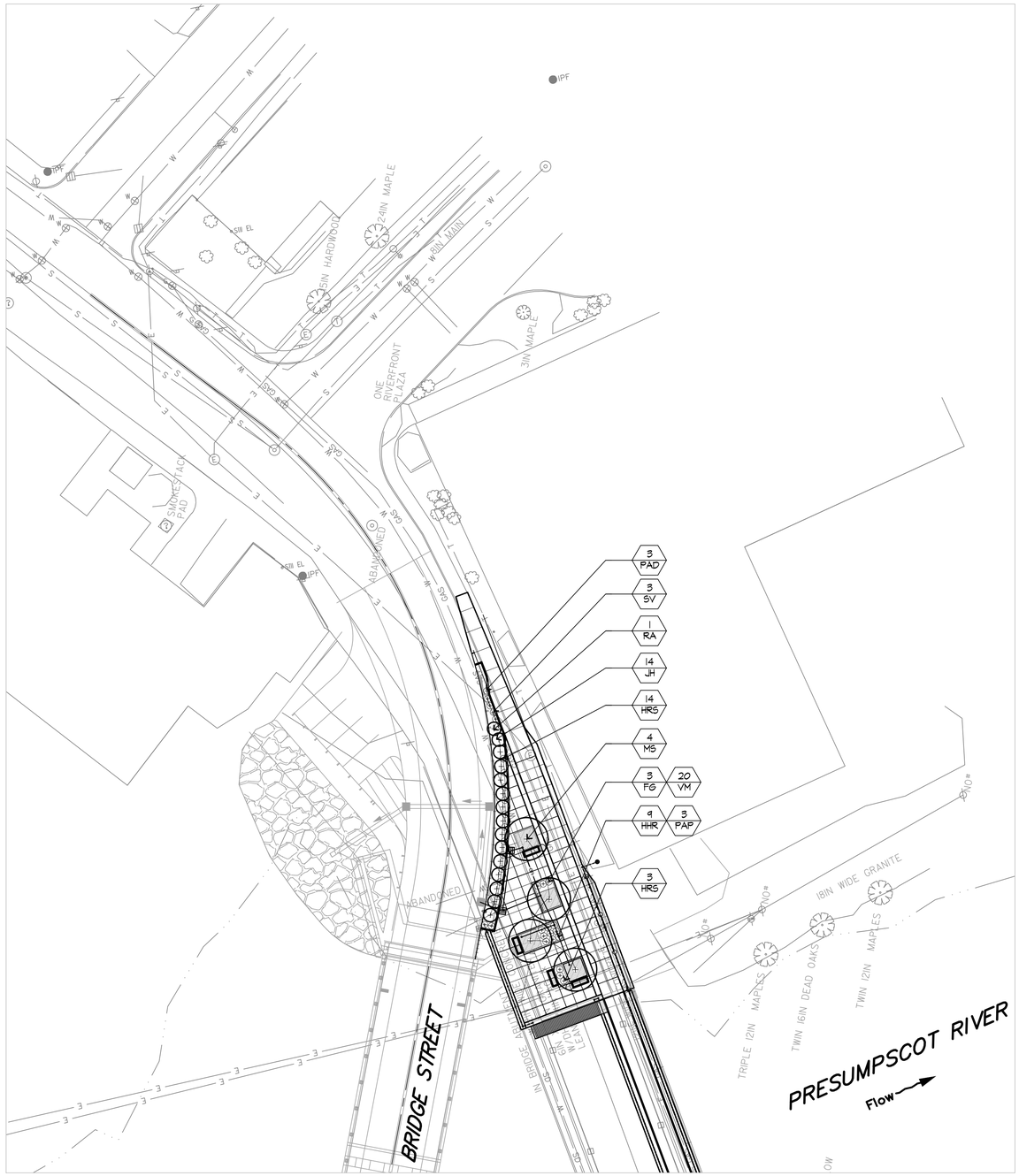

PLAN NORTH OVERLOOK

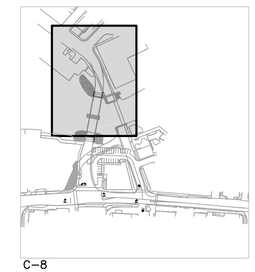

C-8

KEY MAP

0 300' 600'

PLAN

25 0 25 50

Scale of Feet

Stantec Consulting Services Inc.
482 Payne Road, Scarborough ME. 04074
Tel. 207.883.3355 Fax. 207.883.3376 www.stantec.com

Project No. 21800963

Scale (AS NOTED)

CITY OF WESTBROOK

STATE OF MAINE
PATRICK L. CLARK
No. 5749
LICENSED
PROFESSIONAL ENGINEER

	BY	DATE
DESIGN-DETAILED	PLC	9/5/14
CHECKED-REVIEWED	TWM	9/5/14
DESIGN2-DETAILED2	DMG	9/5/14
DESIGN3-DETAILED3		
REVISIONS 1		
REVISIONS 2		
REVISIONS 3		
REVISIONS 4		
FIELD CHANGES		

SIGNATURE

P.E. NUMBER 5749

DATE SEPTEMBER 5, 2014

HEART OF DOWNTOWN STREETSCAPE IMPROVEMENTS

PLANTING (SHEET 2 of 2)

SHEET NUMBER

C-8

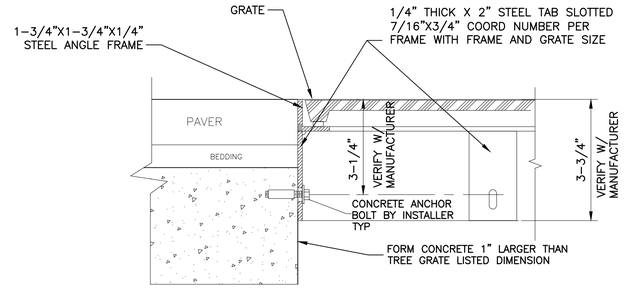

9 TREE GRATE SUPPORT BRICK PAVEMENTS

NOT TO SCALE

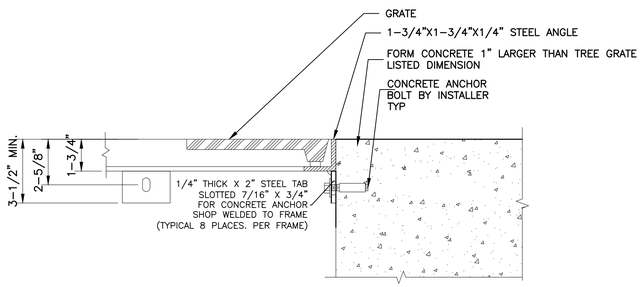

8 TREE GRATE SUPPORT– CONCRETE PAVEMENTS

NOT TO SCALE

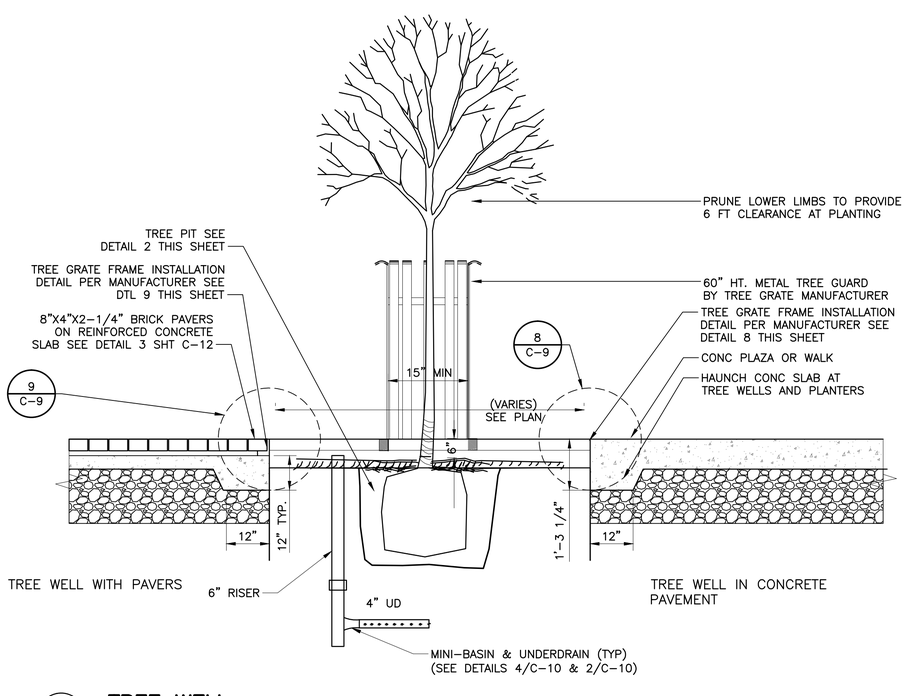

7 TREE WELL

NOT TO SCALE

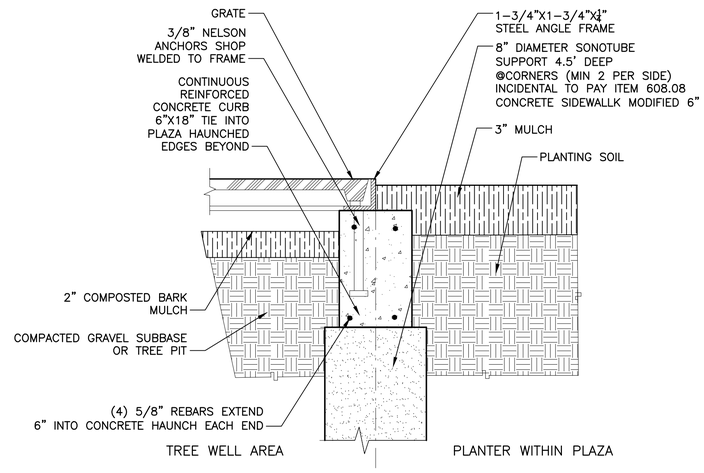

10 TREE GRATE SUPPORT PLANTER CURB

NOT TO SCALE

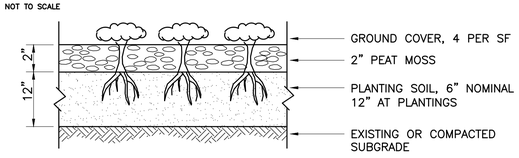

6 GROUNDCOVER PLANTING

NOT TO SCALE

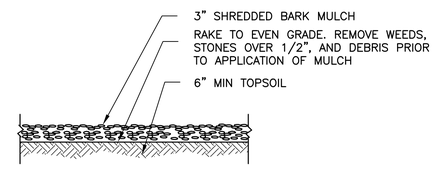

5 COMPOSTED BARK MULCH

NOT TO SCALE

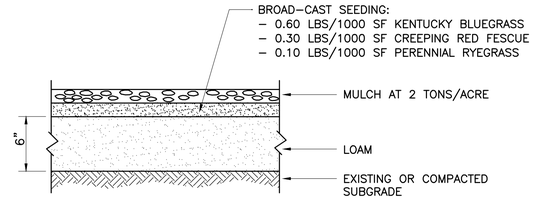

4 LOAM & SEED

NOT TO SCALE

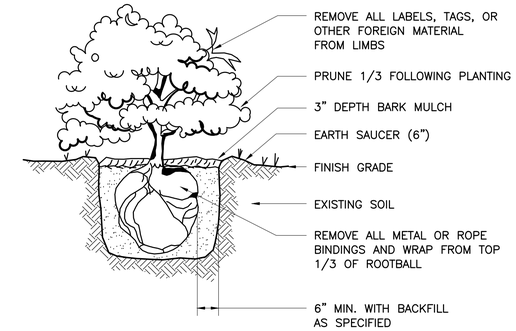

3 SHRUB PLANTING DETAIL

NOT TO SCALE

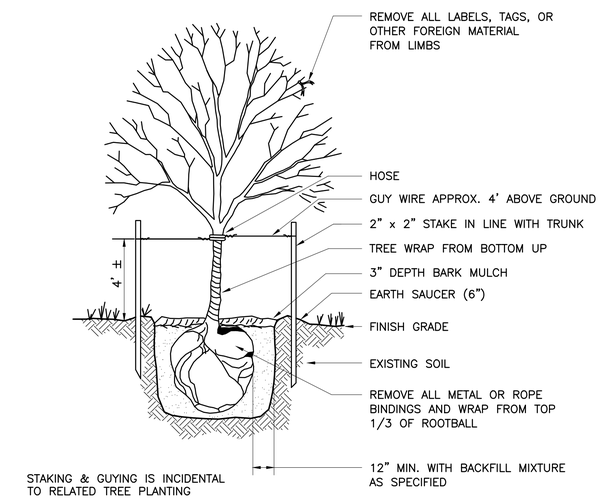

2 DECIDUOUS TREE PLANTING DETAIL

NOT TO SCALE

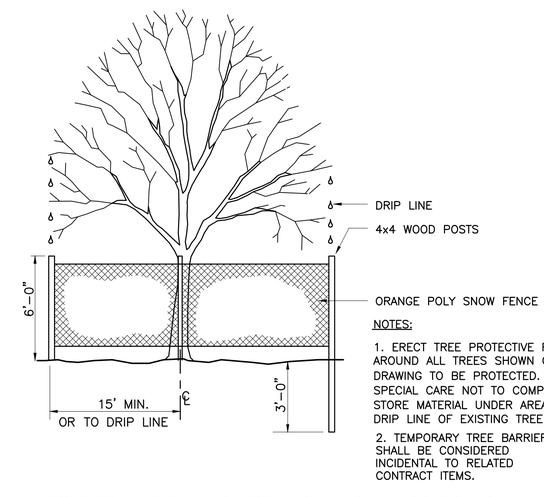

NOTES:

1. ERECT TREE PROTECTIVE FENCING AROUND ALL TREES SHOWN ON DRAWING TO BE PROTECTED. TAKE SPECIAL CARE NOT TO COMPACT OR STORE MATERIAL UNDER AREA WITHIN DRIP LINE OF EXISTING TREE.
2. TEMPORARY TREE BARRIER SHALL BE CONSIDERED INCIDENTAL TO RELATED CONTRACT ITEMS.

1 EXISTING TREE TEMPORARY TREE BARRIER

NOT TO SCALE

Stantec Consulting Services Inc.
482 Payne Road, Scarborough ME. 04074
Tel. 207.883.3355 Fax. 207.883.3376 www.stantec.com

Project No. 21800963 | Scale (AS NOTED)

CITY OF WESTBROOK

STATE OF MAINE — PATRICK L. CLARK No. 5749 — LICENSED PROFESSIONAL ENGINEER

	BY	DATE
DESIGN-DETAILED	TNE	OCT2013
CHECKED-REVIEWED	TNE/SH	OCT2013
DESIGN2-DETAILED2	PLC	OCT2013
DESIGN3-DETAILED3	TNE/PLC	OCT2013
REVISIONS 1	revision1	revdate1
REVISIONS 2		
REVISIONS 3		
REVISIONS 4		
FIELD CHANGES		

SIGNATURE

P.E. NUMBER 5749

DATE SEPTEMBER 5, 2014

HEART OF DOWNTOWN STREETSCAPE IMPROVEMENTS

PLANTING DETAILS

SHEET NUMBER

C-9

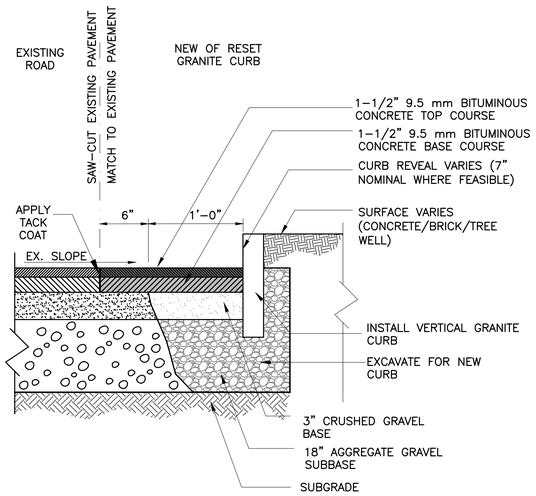

6 CURB REPLACEMENT/INSTALLATION AT EXISTING ROAD

NOT TO SCALE

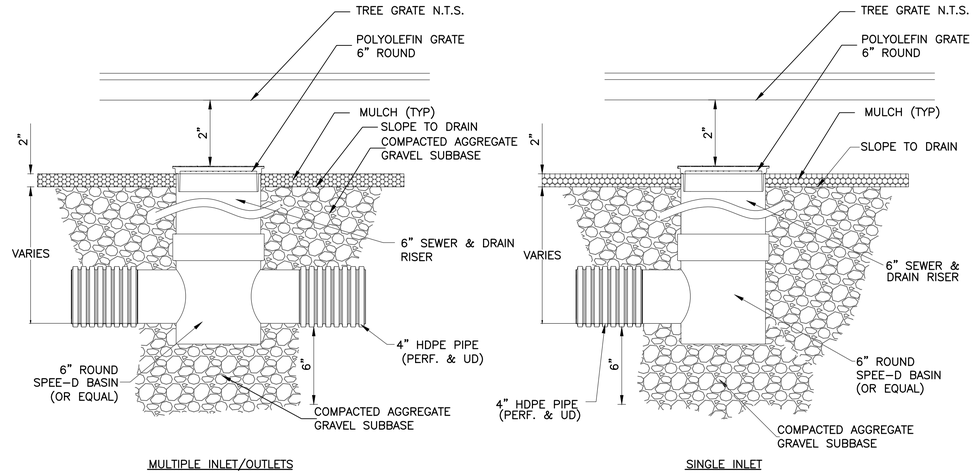

NOTES:

1. GRATE OR LID MUST BE INSTALLED PRIOR TO BACKFILLING
2. SEE DETAIL 2/C-10 FOR UNDER DRAIN INSTALLATION
3. SPECIAL CATCH BASIN UNIT INCLUDES BASIN WITH SINGLE OR MULTIPLE INLET/OUTLETS, RISER PIPE AND GRATE

4 SPECIAL CATCH BASIN (604.30)

NOT TO SCALE

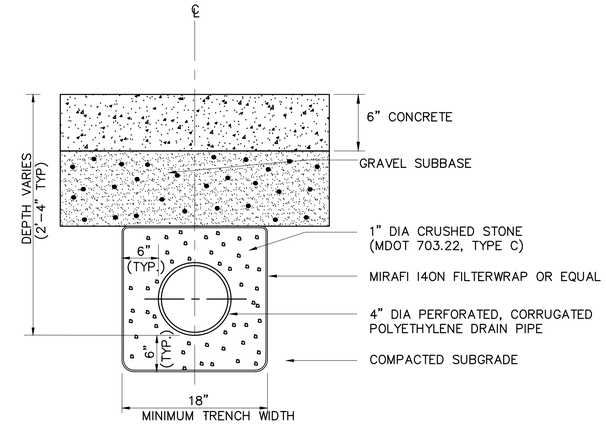

NOTES:

1. BACKFILL MATERIAL WITHIN TRENCH BEYOND UNDERDRAIN LATERAL LIMITS SHALL, AS A MINIMUM, CONFORM TO THE REQUIREMENTS OF GRANULAR BORROW.
2. UNDERDRAIN SHALL CONFORM TO THE REQUIREMENTS OF MDOT 605.04, TYPE B, EXCEPT AS NOTED OR SHOWN.
3. OUTLETS SHALL BE CONNECTED TO THE STORM DRAIN SYSTEM AS SHOWN ON THE PLANS, OR GRADED BY GRAVITY TO A SUITABLE DISCHARGE POINT.

2 4" UNDERDRAIN TRENCH DETAIL

NOT TO SCALE

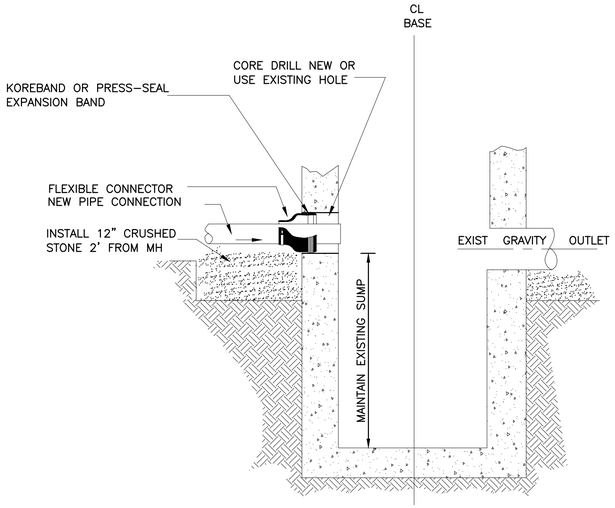

NOTE: CORING EXISTING CATCH BASIN AND BOOTING SHALL BE INCIDENTAL TO THE ASSOCIATED DRAINAGE PIPE OR UNDERDRAIN ITEMS.

5 FLEXIBLE CONNECTION TO EXISTING CB

NOT TO SCALE

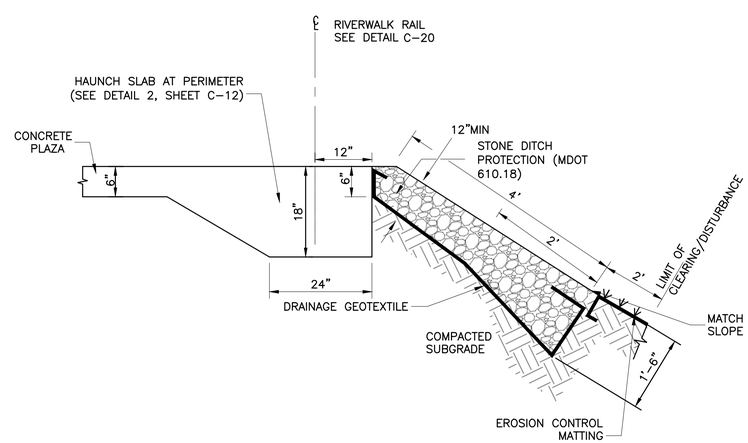

3 STONE EDGE

NOT TO SCALE

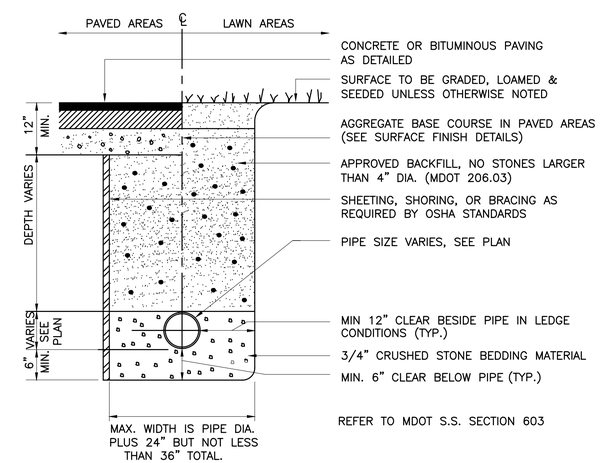

1 TYPICAL PIPE BEDDING DETAIL

NOT TO SCALE

Stantec Consulting Services Inc.
482 Payne Road, Scarborough ME. 04074
Tel. 207.883.3355 Fax. 207.883.3376 www.stantec.com

Project No. 21080963 | Scale (AS NOTED)

CITY OF WESTBROOK

STATE OF MAINE — PATRICK L. CLARK No. 5749 — LICENSED PROFESSIONAL ENGINEER

		BY	DATE
DESIGN-DETAILED	PLC	SH	OCT2013
CHECKED-REVIEWED	PLC	PLC/TNE	OCT2013
DESIGN2-DETAILED2			
DESIGN3-DETAILED3			
REVISIONS 1	revision1	revdate1	
REVISIONS 2			
REVISIONS 3			
REVISIONS 4			
FIELD CHANGES			

SIGNATURE | P.E. NUMBER 5749 | DATE SEPTEMBER 5, 2014

HEART OF DOWNTOWN STREETSCAPE IMPROVEMENTS

DRAINAGE SYSTEM DETAILS

SHEET NUMBER

C-10

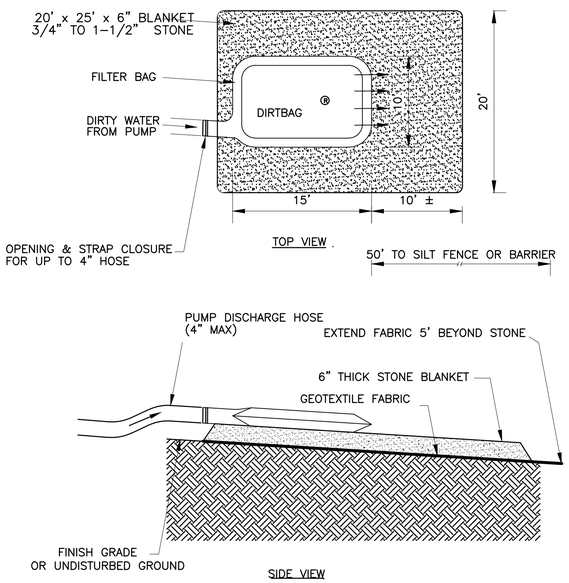

7 PUMPED DISCHARGE SEDIMENT CONTROL DEVICE

NOT TO SCALE

SEE GENERAL NOTES, C-11

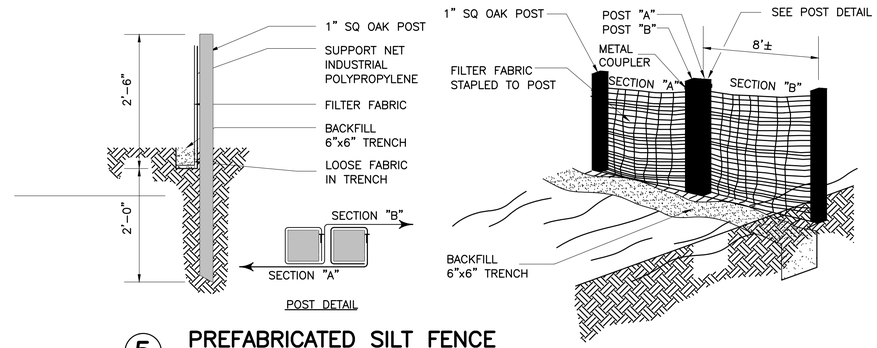

5 PREFABRICATED SILT FENCE

NOT TO SCALE

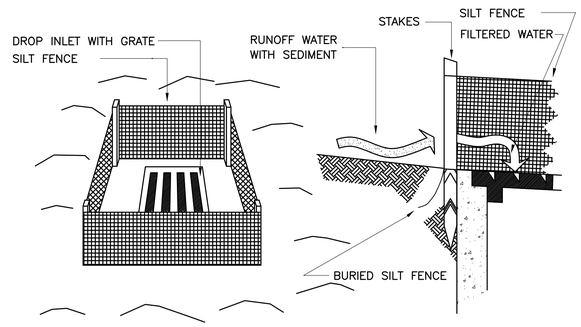

SPECIFIC APPLICATION:

THIS METHOD OF INLET PROTECTION IS APPLICABLE WHERE THE INLET DRAINS A RELATIVELY FLAT AREA (SLOPES NO GREATER THAN 5 PERCENT) WHERE SHEET OR OVERLAND FLOWS (NOT EXCEEDING 0.5 CFS) ARE TYPICAL. THE METHOD SHALL NOT APPLY TO INLETS RECEIVING CONCENTRATED FLOWS, SUCH AS IN STREETS OR HIGHWAY MEDIANS.

4 SILT FENCE DROP INLET SEDIMENT FILTER

NOT TO SCALE

GENERAL NOTES:

1. DEWATERING AND PROTECTION OF EXISTING CATCH BASINS AND DRAINAGE STRUCTURES SHALL BE INCIDENTAL TO THE CONSTRUCTION OF ADJACENT PAVEMENT OR INFRASTRUCTURE.
2. EXISTING AND NEW CATCH BASINS WITHIN OR RECEIVING RUNOFF FROM AREAS OF CONSTRUCTION OR DISTURBANCE SHALL BE PROTECTED WITH DROP INLET FILTER BMP SUCH AS SILT FENCE DROP INLET SEDIMENT FILTER, BLOCK & GRAVEL DROP INLET SEDIMENT FILTER, SILT SAVER FRAME & FILTER OR SILT SACK SEDIMENT TRAP.
3. AREAS REQUIRING DEWATERING SHALL EMPLOY USE OF DIRTBAG OR OTHER SEDIMENT CONTROL BMP, AS APPROVED BY ENGINEER. LOCATION OF DISCHARGE SHALL BE APPROVED BY ENGINEER.

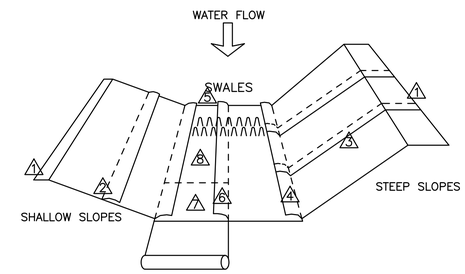

SITE PREPARATION:

PREPARE SEEDBED, THEN APPLY SEED, FERTILIZER AND/OR SOIL AMENDMENTS PER SPECS PRIOR TO INSTALLATION.

SLOPES:

1 CONSTRUCT A 6"W x 12"D ANCHOR TRENCH 2'-3' BEYOND CREST OF SLOPE. STAPLE EROSION CONTROL MATTING IN TRENCH ON 1' SPACINGS, BACKFILL AND COMPACT SOIL.

2 ON SLOPES 3:1 OR FLATTER, MATTING CAN BE INSTALLED ACROSS THE SLOPE FACE OR ALONG SIDE SLOPE. OVERLAP EDGES WITH THE UPSLOPE MATERIAL ON TOP. STAPLE ALONG CENTERLINE OF OVERLAP USING RECOMMENDED STAPLING PATTERN.

3 ON SLOPES STEEPER THAN 3:1 AND HIGHER THAN 6' VERTICALLY, ROLL MATTING DOWNSLOPE. OVERLAP EDGES AT LEAST 4". STAPLE ALONG CENTERLINE OF OVERLAP USING STAPLING PATTERN.

4 SHINGLE-LAP ROLL ENDS ON SLOPES AND SIDESLOPES A MINIMUM OF 4" AND IN THE DIRECTION OF WATER FLOW. STAPLE OVERLAP ON 1' SPACINGS.

SWALES OR DITCHES:

5 CONSTRUCT A 12" DEEP ANCHOR TRENCH AT THE UPGRADE END OF THE INSTALLATION TO INHIBIT UNDERCUTTING BY SURFACE RUNOFF (SEE NOTE # 1).

6 AFTER SEEDING BASE OF DITCH AT TWICE RECOMMENDED SEEDING APPLICATION RATE, AND SIDESLOPES AT NORMAL RATE, PLACE STRAW OR HAY MULCH IN BASE AND 3' UP SIDESLOPES BENEATH EROSION CONTROL MATTING FOR ADDITIONAL PROTECTION AND/OR MOISTURE RETENTION. OVERLAP THE EDGES AT LEAST 4" AND STAPLE DOWN CENTER OF OVERLAP USING GENERAL STAPLE PATTERN.

7 SHINGLE-LAP END OF ROLLS AT LEAST 1' WITH UPSTREAM MATERIAL ON TOP AND IN THE DIRECTION OF WATER FLOW. ANCHOR OVERLAP WITH TWO ROWS OF STAPLES 1' APART ON 1' SPACINGS.

8 AT 25' – 30' INTERVALS ALONG THE CHANNEL BOTTOM, APPLY A ROW OF STAPLES 6' APART. THEN PLACE A SECOND ROW OF STAPLES 6" BELOW THE FIRST ROW IN A STAGGERED PATTERN.

2 GENERAL EROSION CONTROL MATTING INSTALLATION GUIDE

NOT TO SCALE

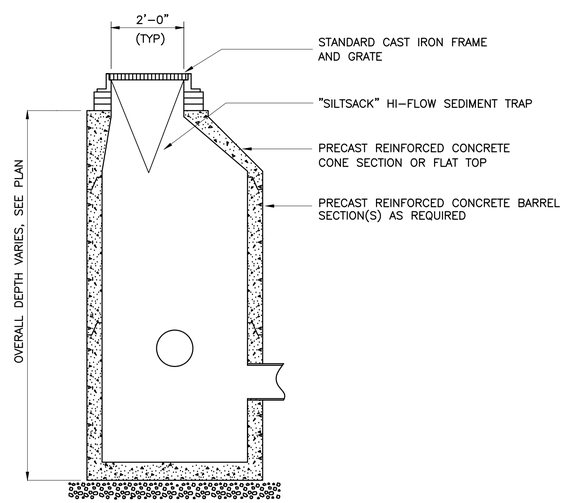

6 CATCH BASIN WITH "SILTSACK" TEMPORARY SEDIMENT TRAP

NOT TO SCALE

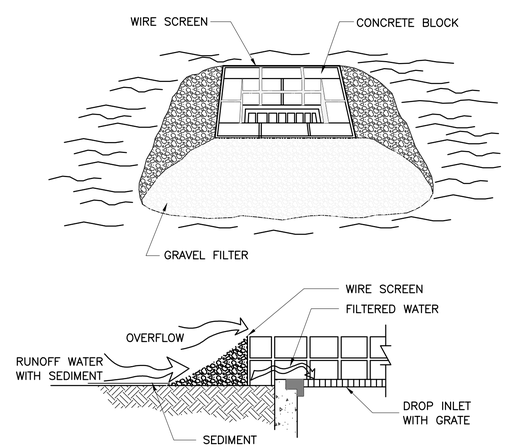

3 BLOCK & GRAVEL DROP INLET SEDIMENT FILTER

NOT TO SCALE

TYPICAL CONSTRUCTION SEQUENCE
FOR SILT-SAVER FRAME & FILTER

1. EXCAVATE APPROXIMATELY 4" TO 6" BELOW THE TOP OF THE INLET STRUCTURE.
2. PLACE THE FRAME ONTO THE INLET STRUCTURE, ENSURING PROPER SEATING OF FRAME TO STRUCTURE.
3. SLIDE THE FILTER OVER THE FRAME.
4. FILL THE FILTER POCKETS WITH SOIL, #57 GRAVEL OR EQUIVALENT. THE FILTER POCKETS SHOULD BE COMPLETELY FILLED TO ENSURE A GOOD SEAL BETWEEN THE GROUND AND INLET STRUCTURE.
5. BACK FILL AROUND THE FRAME AND FILTER ASSEMBLY IS NOT REQUIRED TO COMPLETE INSTALLATION; HOWEVER, BACK FILLING MAY BE NECESSARY TO COMPLETE EXCAVATION REQUIREMENTS FOR THE SITE.

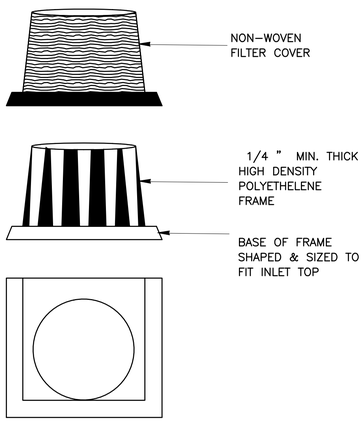

1 SILT SAVER FRAME & FILTER

NOT TO SCALE

Stantec Consulting Services Inc.
482 Payne Road, Scarborough ME. 04074
Tel. 207.883.3355 Fax. 207.883.3376 www.stantec.com

Project No. 21800963 | Scale (AS NOTED)

CITY OF WESTBROOK

PLANS

STATE OF MAINE
PATRICK L. CLARK
No. 5749
LICENSED
PROFESSIONAL ENGINEER

	BY	DATE
DESIGN-DETAILED	SH	OCT2013
CHECKED-REVIEWED	TNE/PLC	OCT2013
DESIGN2-DETAILED2		
DESIGN3-DETAILED3		
REVISIONS 1		
REVISIONS 2		
REVISIONS 3		
REVISIONS 4		
FIELD CHANGES		

SIGNATURE

P.E. NUMBER 5749

DATE SEPTEMBER 5, 2014

HEART OF DOWNTOWN
STREETSCAPE IMPROVEMENTS

EROSION CONTROL DETAILS

SHEET NUMBER

C-11

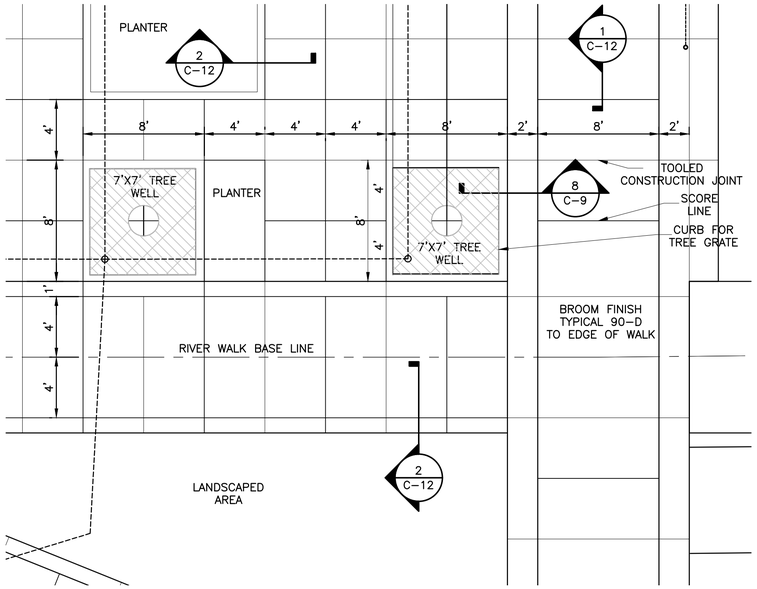

7 TYPICAL PLAZA CONCRETE PAVING DETAIL

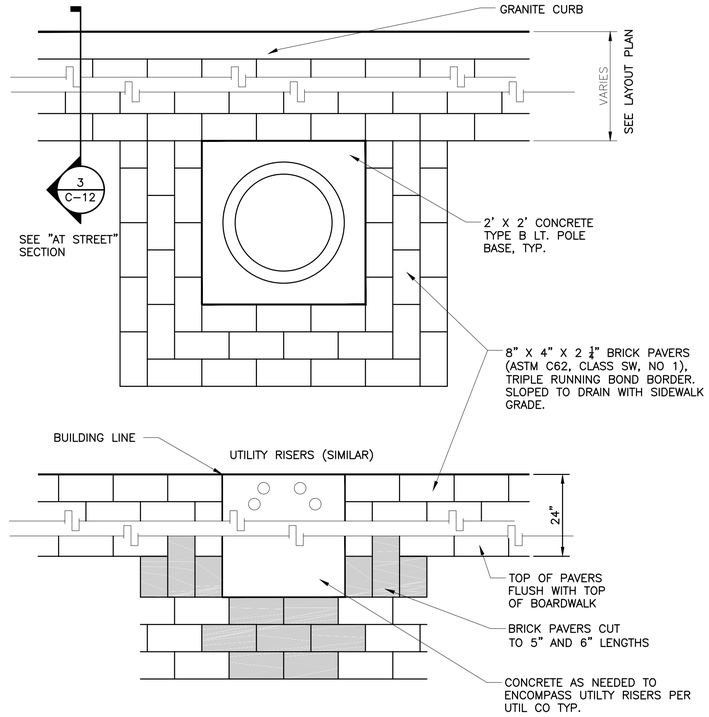

4 PAVER PATTERN: AROUND LIGHT POLE BASE

NOT TO SCALE

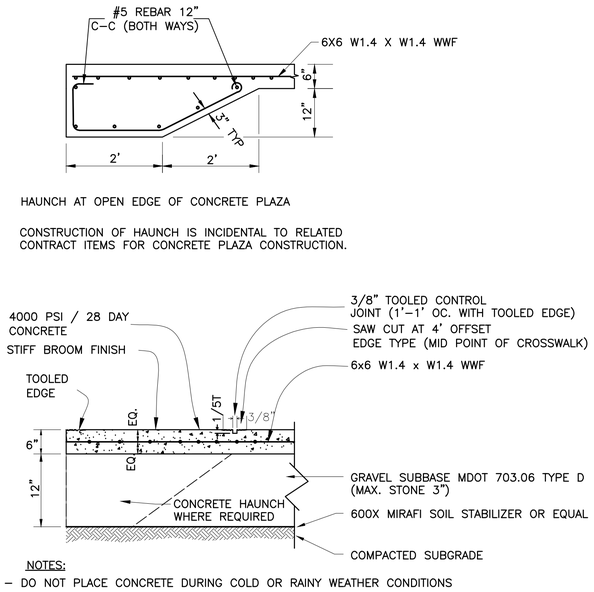

2 CONCRETE PLAZA DETAIL

NOT TO SCALE

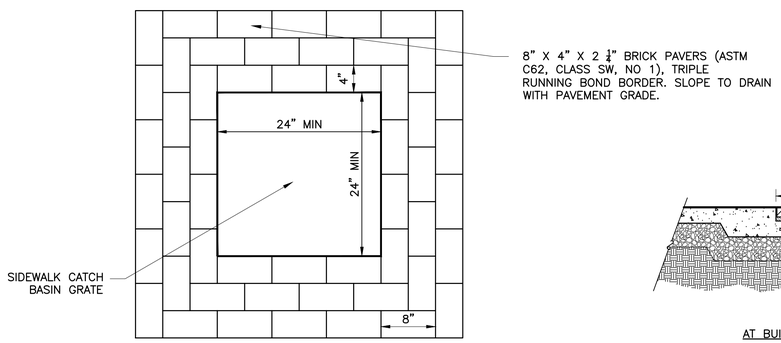

6 PAVER PATTERN: AROUND STORM INLET

NOT TO SCALE

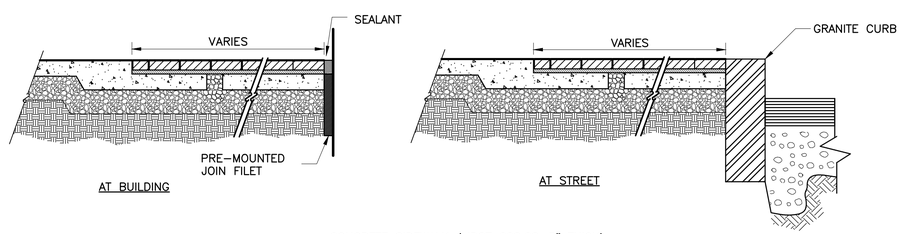

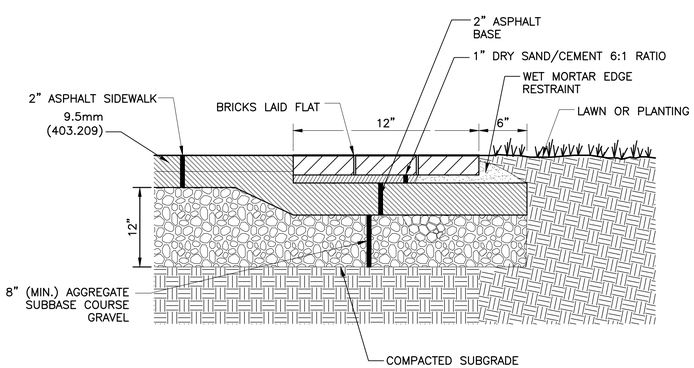

5 BITUMINOUS/BRICK SIDEWALK

NOT TO SCALE

NOTE:
PROVIDE 4" DIA. WEEP HOLES ON RECESSED CONCRETE SLAB BELOW PAVERS AT 5'-0" O.C.

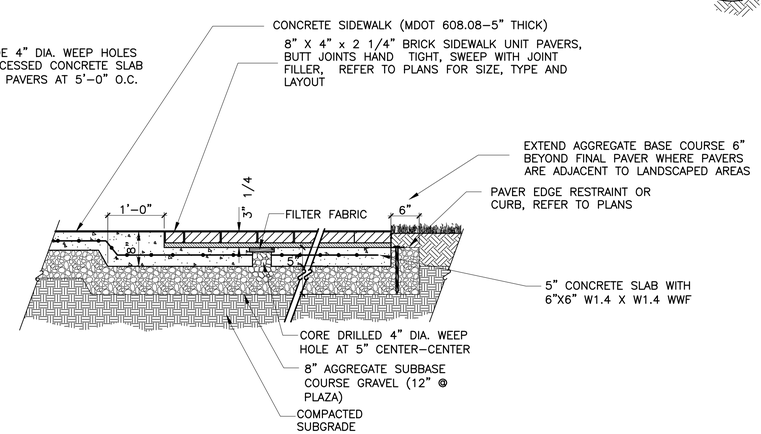

3 CONCRETE SIDEWALK & BRICK PAVERS

NOT TO SCALE

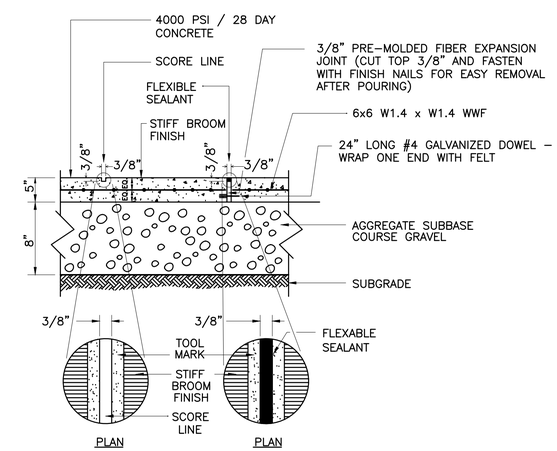

NOTES:
- INSTALL SAMPLE OF CONCRETE WALK PAVEMENT FOR ENGINEER'S APPROVAL PRIOR TO FINAL INSTALLATION.
- DO NOT PLACE CONCRETE DURING COLD OR RAINY WEATHER CONDITIONS
- SEE PLAN DRAWINGS FOR SCORING PATTERNS, TEXTURE AND EXPANSION JOINT LOCATIONS.

1 CONCRETE WALK

NOT TO SCALE

Stantec Consulting Services Inc.
482 Payne Road, Scarborough ME. 04074
Tel. 207.883.3355 Fax. 207.883.3376 www.stantec.com

Project No. 21800963
Scale (AS NOTED)

CITY OF WESTBROOK

STATE OF MAINE
PATRICK L. CLARK
No. 5749
LICENSED
PROFESSIONAL ENGINEER

DESIGN-DETAILED	TNE/PLC		
CHECKED-REVIEWED	PLC		
DESIGN2-DETAILED2			
DESIGN3-DETAILED3			
REVISIONS 1	revision1		
REVISIONS 2			
REVISIONS 3			
REVISIONS 4			
FIELD CHANGES			

	BY	DATE
	SH/TNE	OCT2013
	PLC/TNE	OCT2013
revdate1		

SIGNATURE
P.E. NUMBER 5749
DATE SEPTEMBER 5, 2014

HEART OF DOWNTOWN STREETSCAPE IMPROVEMENTS

SIDEWALK & PAVEMENT DETAILS

SHEET NUMBER
C-12

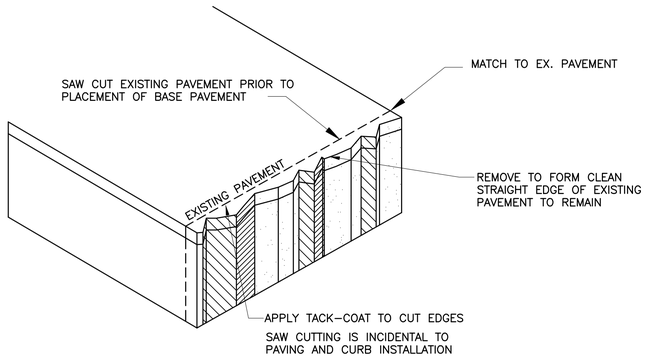

7 PAVEMENT SAW-CUT

NOT TO SCALE

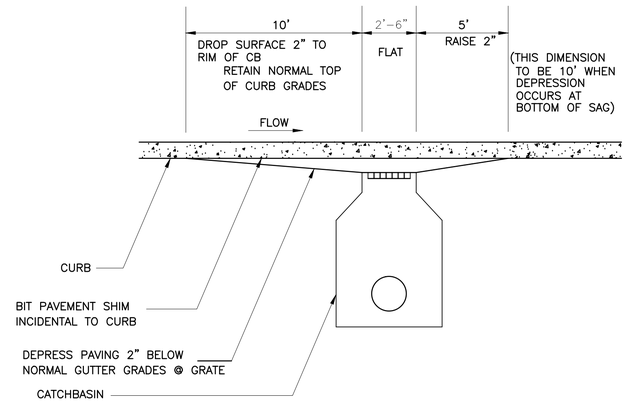

4 GUTTER GRADE TRANSITION AT CATCH BASIN

NOT TO SCALE

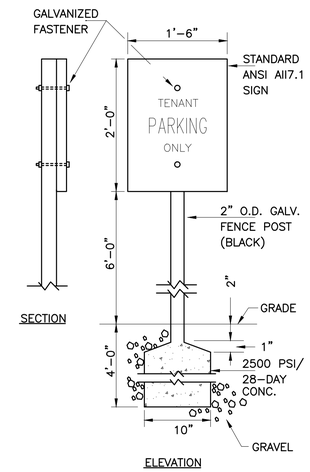

2 PARKING SIGN DETAILS

NOT TO SCALE

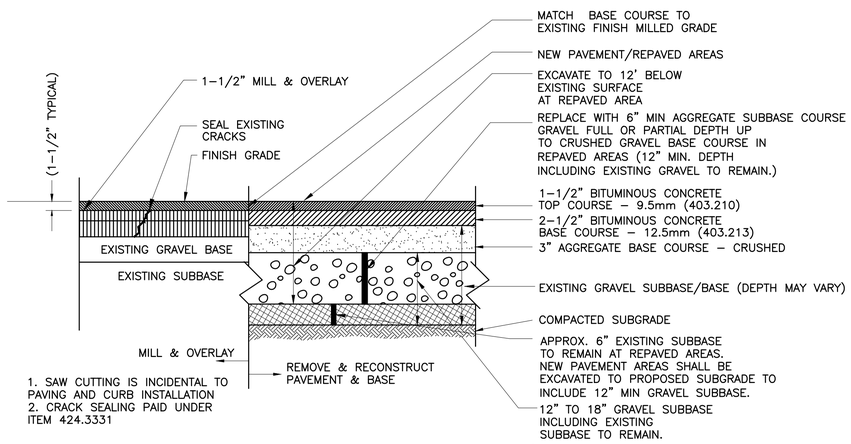

1. SAW CUTTING IS INCIDENTAL TO PAVING AND CURB INSTALLATION
2. CRACK SEALING PAID UNDER ITEM 424.3331

6 BITUMINOUS CONCRETE OVERLAY/NEW PAVEMENT

NOT TO SCALE

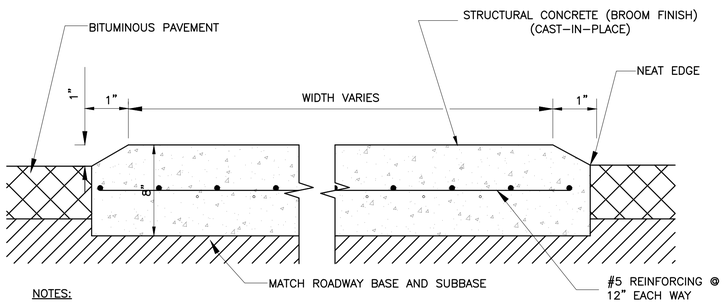

NOTES:

1. SAW CUT EXISTING PAVEMENT IN A NEAT LINE AND USE AS FORM FOR CONCRETE MEDIAN.
2. APPLY A LIGHT COAT OF TAR OR ASPHALT TO ACT AS A BOND BREAKER BETWEEN THE CONCRETE MEDIAN AND THE HOT MIX ASPHALT. PAYMENT TO BE INCIDENTAL TO ITEM 502.341, STRUCTURAL CONCRETE ROADWAY MEDIAN
3. CONCRETE PLACEMENT PROCEDURES SHALL BE SUBJECT TO THE APPROVAL OF THE RESIDENT AND IN CONFORMANCE WITH SECTION 502.
4. FINISHED SURFACE OF MEDIAN SHALL BE STIFF BROOM FINISH.

5 STRUCTURAL CONCRETE ROADWAY MEDIAN

NOT TO SCALE

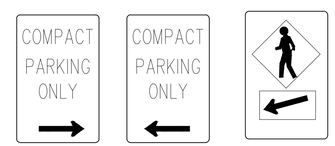

R-7 SERIES LEFT

R-7 SERIES RIGHT

W11-2 W16-7P

SEE MAINEDOT SHEETS 16-19 FOR RELATED SIGNAGE INFORMATION

3 TRAFFIC SIGNS

NOT TO SCALE

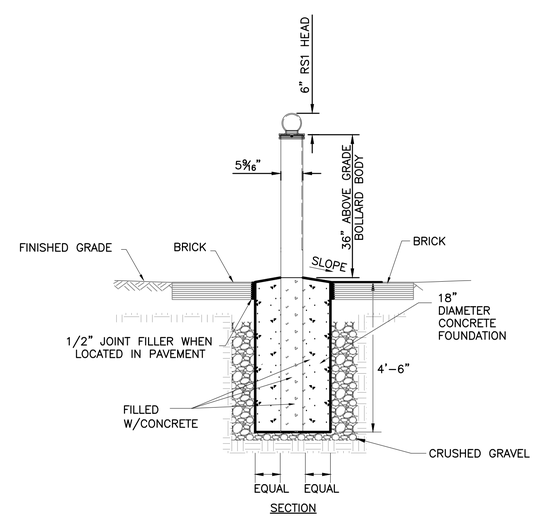

1 TYPICAL PIPE BOLLARD DETAIL

NOT TO SCALE

Stantec Consulting Services Inc.
482 Payne Road, Scarborough ME. 04074
Tel. 207.883.3355 Fax. 207.883.3376 www.stantec.com

Project No. 21800963

Scale (AS NOTED)

CITY OF WESTBROOK

STATE OF MAINE
PATRICK L. CLARK
No. 5749
LICENSED
PROFESSIONAL ENGINEER

	BY	DATE
DESIGN-DETAILED	PLC	OCT2013
CHECKED-REVIEWED	PLC/TNE	OCT2013
DESIGN2-DETAILED2		
DESIGN3-DETAILED3		
REVISIONS 1	revision1	revdate1
REVISIONS 2		
REVISIONS 3		
REVISIONS 4		
FIELD CHANGES		

SIGNATURE

P.E. NUMBER 5749

DATE SEPTEMBER 5, 2014

HEART OF DOWNTOWN STREETSCAPE IMPROVEMENTS

PAVEMENT AND SITE DETAILS

SHEET NUMBER

C-13

GENERAL NOTES
1. WHEN THE SIDEWALK IS LESS THAN 5'–0" IN WIDTH, A MINIMUM PAD 5'–0"x5'–0" SLOPING NO MORE THAN 1/4" PER FOOT SHALL BE PROVIDED WHENEVER A CHANGE IN DIRECTION MUST BE MADE.
2. THERE SHALL BE A MINIMUM OF 12" AGGREGATE SUBBASE COURSE–GRAVEL UNDER THE 2" PAVEMENT ON PEDESTRIAN RAMPS.
3. CURB OPENINGS FOR PEDESTRIAN RAMPS SHALL BE 6' MINIMUM.

8 PEDESTRIAN RAMP NOTES
NOT TO SCALE

CURB TYPES 1 ON CURVES				
TYPE	RADIUS OF CURVE	LENGTH	PAID FOR AS	STONE IS CUT OR CAST
1 & 2	0' TO 60' INCL.	4' MIN.	CIRCULAR	ARC TO FIT CURVE
	OVER 60' TO 160'	4' TO 6'	STRAIGHT	STRAIGHT PIECES

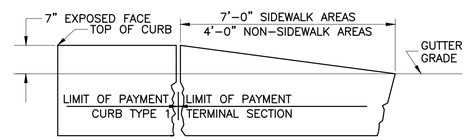

TERMINAL SECTION TYPE "1"

5 TERMINAL CURB SECTION
NOT TO SCALE

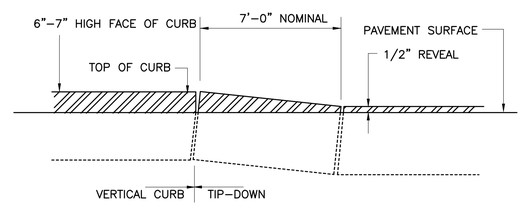

4 CURB SECTION AT RAMP
NOT TO SCALE

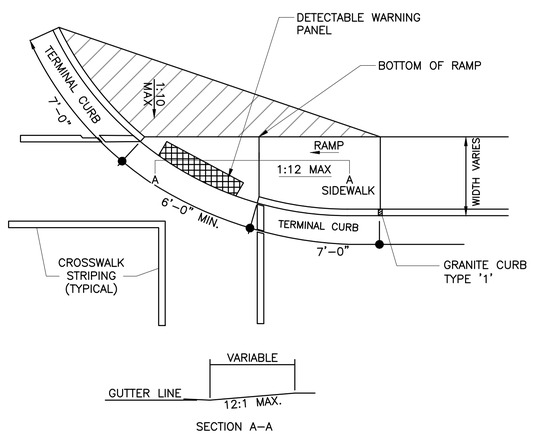

7 PEDESTRIAN RAMP – DETAIL B
NOT TO SCALE

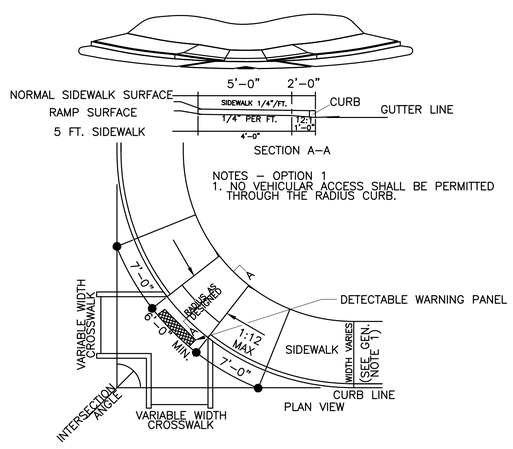

6 PEDESTRIAN RAMP – DETAIL A
NOT TO SCALE

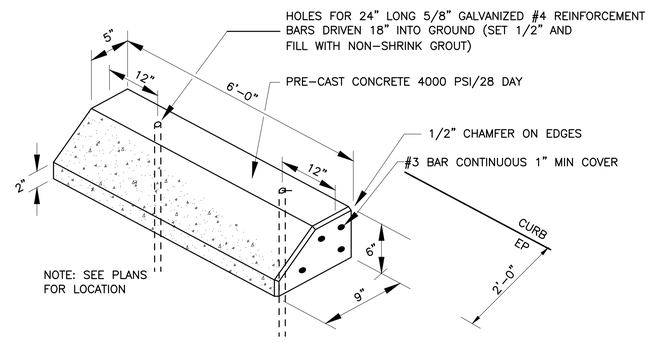

3 WHEEL STOP
NOT TO SCALE

NOTES:
(1) CURB SHALL BE FROM RECLAIMED STOCKPILE OF EXISTING CURB REMOVED AND STORED FOR REUSE.
(2) ONLY CURB WHICH HAS BEEN DEEMED SUITABLE FOR REUSE SHALL BE REINSTALLED.
(3) CURB REVEAL SHALL BE 7" MAX, PER DESIGN. WHERE INSTALLATION MEETS EXISTING OR DESIGNED GRADE AT TOP OF CURB AND MUST MEET EXISTING BOTTOM OF CURB ELEVATION OF PAVEMENT AT STREET GUTTER GRADE, FINISH HEIGHT OF CURB REVEAL MAY VARY TO MEET GRADE, OR EXISTING CURB REVEAL.

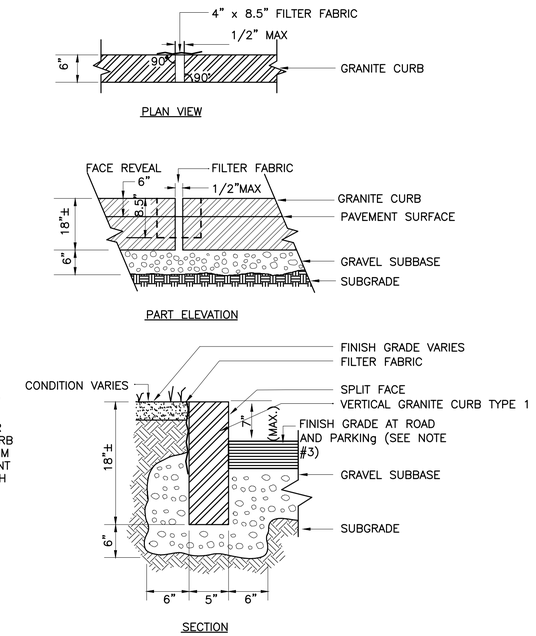

2 VERTICAL GRANITE CURB (MDOT TYPE "1")
NOT TO SCALE

1 NOT USED

Stantec Consulting Services Inc.
482 Payne Road, Scarborough ME. 04074
Tel. 207.883.3355 Fax. 207.883.3376 www.stantec.com

Project No. 21800963 | Scale (AS NOTED)

CITY OF WESTBROOK

STATE OF MAINE
PATRICK L. CLARK
No. 5749
LICENSED
PROFESSIONAL ENGINEER

	BY	DATE
DESIGN–DETAILED	PLC	SH/TNE	OCT2013
CHECKED–REVIEWED	TNE	PLC	OCT2013
DESIGN2–DETAILED2			
DESIGN3–DETAILED3			
REVISIONS 1	revision1	revdate1
REVISIONS 2		
REVISIONS 3		
REVISIONS 4		
FIELD CHANGES		

SIGNATURE
P.E. NUMBER 5749
DATE SEPTEMBER 5, 2014

HEART OF DOWNTOWN STREETSCAPE IMPROVEMENTS

CURBING AND SITE DETAILS

SHEET NUMBER
C–14

TREE GRATE
#M8402–1
STYLE: STARBURST
SERIES 1

GRATE SUPPLIED
IN FOUR SECTIONS

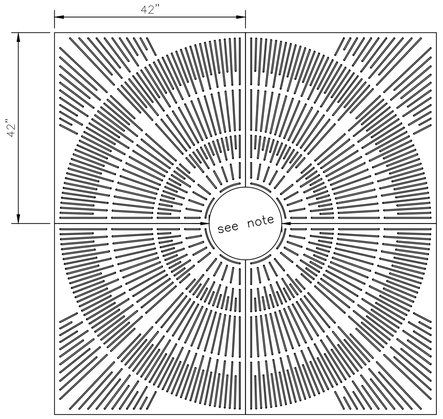

1/2" x 1" x 1/4" THICK GRINDING PADS FOR LEVELING – TYP. 4 OR MORE PLACES.

SLOT WIDTH IS 1/4" MAXIMUM, MEETS ADA COMPLIANCE.
GRATE CAST FROM GRAY IRON OR ALUMINUM
TREE OPENING SIZE. 16", 18" , 28" OR 44"
STEEL ANGLE FRAME REQUIRED
FOR INSTALLATION USE MODEL M8400F–CS
OUTER FRAME DIM. IS 3/4" ± 1/8"
GREATER THAN GRATE. .

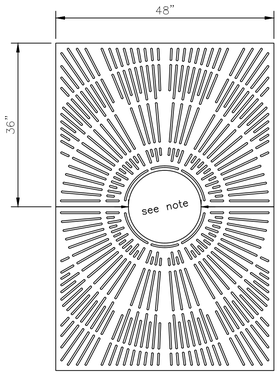

TREE GRATE 48"X72"
#M7222–2
STYLE: STARBURST
SERIES 2

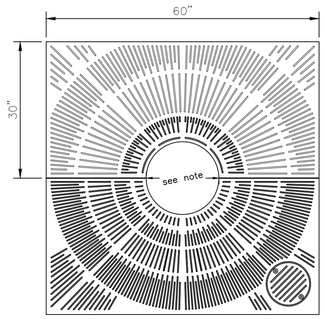

TREE GRATE 60"X60"
#M6018/20–1
STYLE: STARBURST
SERIES 1

4 TREE GRATE DETAIL

NOT TO SCALE

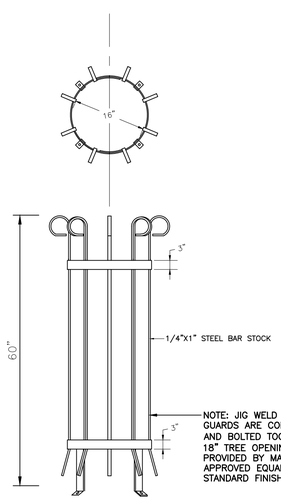

NOTE: JIG WELD HOT ROLLED STEEL PER ASTM–36. GUARDS ARE CONSTRUCTED IN HALVES AND BOLTED TOGETHER. PROVIDE 60" HEIGHT AND 18" TREE OPENING. ALL HARDWARE SHALL BE PROVIDED BY MANUFACTURER IRONSMITH OR APPROVED EQUAL. COLOR BLACK POWDER COAT STANDARD FINISH TO MATCH TREE GRATES.

3 TREE GUARD DETAIL

NOT TO SCALE

NOTES:
1. ALL FABRICATED METAL COMPONENTS ARE STEEL SHOTBLASTED, ETCHED, PHOSPHATIZED, PREHEATED, AND ELECTROSTATICALLY POWDER–COATED WITH T.G.I.C. POLYESTER POWDER COATINGS. PRODUCTS ARE FULLY CLEANED AND PRETREATED, PREHEATED AND COATED WHILE HOT TO FILL CREVICES AND BUILD FILM COATING. COATED PARTS ARE THEN FULLY CURED TO COATING MANUFACTURER'S SPECIFICATIONS. THE THICKNESS OF THE RESULTING FINISH AVERAGES 8–10 MILS (200–250 MICRONS).
2. THIS VICTOR STANLEY, INC. PRODUCT OR APPROVED EQUAL MUST BE PERMANENTLY AFFIXED TO THE GROUND PER LOCAL CODES AND REGULATIONS.
3. PROVIDE PLASTIC INNER LINERS FOR MAXIMUM CAPACITY AND STRENGTH WITH LIGHTWEIGHT CONSTRUCTION USING CRITICAL MOLDED RIBS, INTEGRAL HANDHOLDS, AND HIGH–STRENGTH MATERIALS.
4. ANCHOR BOLT NOT PROVIDED BY MANUFACTURER.
5. HOT DIP GALVANIZE BEFORE POWDER COATING.

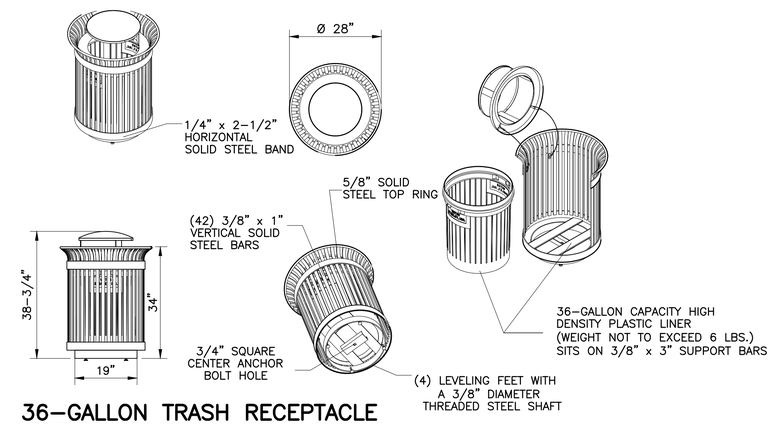

2 36–GALLON TRASH RECEPTACLE

NOT TO SCALE

IRONSITES SERIES S–424
OR APPROVED EQUAL TO MATCH EXISTING RIVER WALK
TRASH RECEPTACLES EXCEPTING "ASH TRAY" OPTION

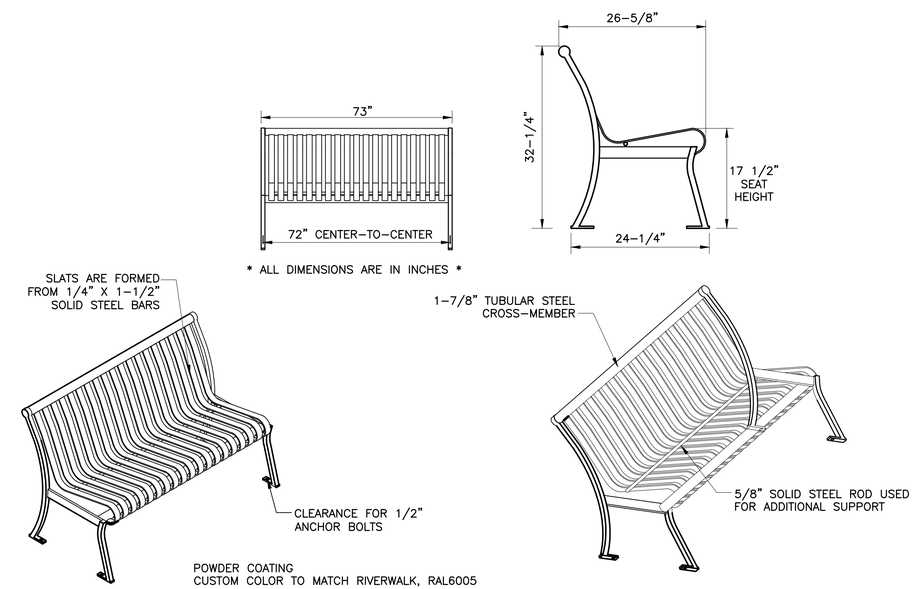

1 BENCH DETAIL

NOT TO SCALE

PRSNA–127
STANDARD 6 FOOT LENGTH

Stantec Consulting Services Inc.
482 Payne Road, Scarborough ME. 04074
Tel. 207.883.3355 Fax. 207.883.3376 www.stantec.com

Project No. 21080963
Scale (AS NOTED)

CITY OF WESTBROOK

STATE OF MAINE
PATRICK L. CLARK
No. 5749
LICENSED
PROFESSIONAL ENGINEER

SIGNATURE			
P.E. NUMBER 5749			
DATE SEPTEMBER 5, 2014			

	BY	DATE
DESIGN–DETAILED	SH/TNE	OCT2013
CHECKED–REVIEWED	PLC	OCT2013
DESIGN2–DETAILED2		
DESIGN3–DETAILED3		
REVISIONS 1	revision1	revdate1
REVISIONS 2		
REVISIONS 3		
REVISIONS 4		
FIELD CHANGES		

HEART OF DOWNTOWN
STREETSCAPE IMPROVEMENTS

SITE FEATURE DETAILS

SHEET NUMBER
C–15

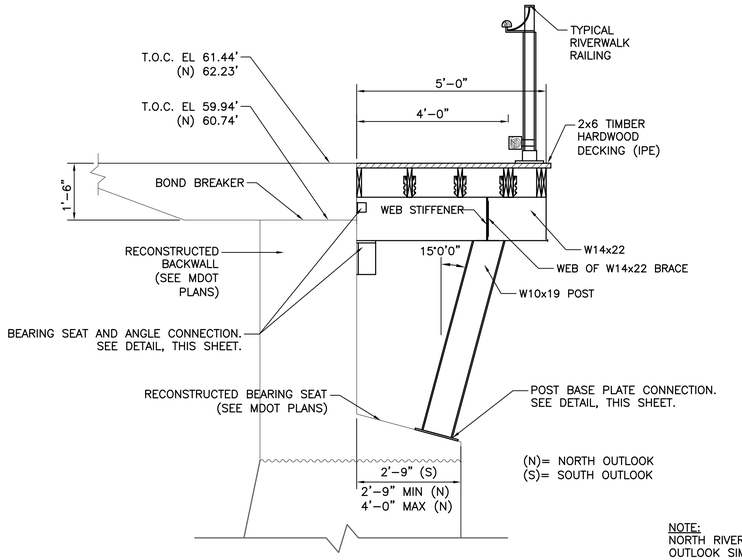

NOTE:
NORTH RIVER VIEWING OUTLOOK SIMILAR

A–A SOUTH RIVER VIEWING OUTLOOK

SCALE: 1/2"=1'-0"

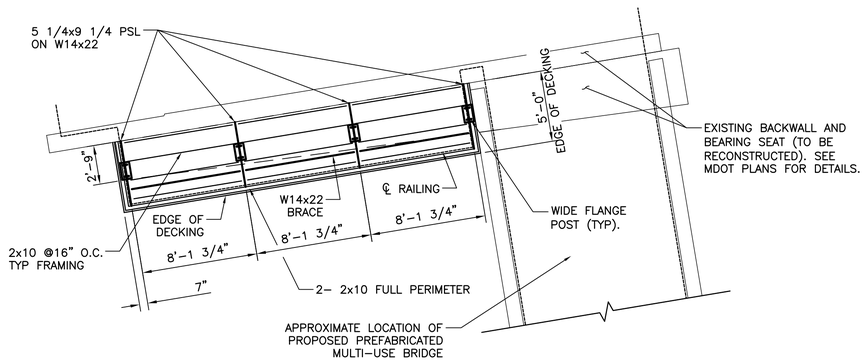

RIVERWALK NORTH OVERLOOK FRAMING PLAN

SCALE: 3/16"=1'-0"

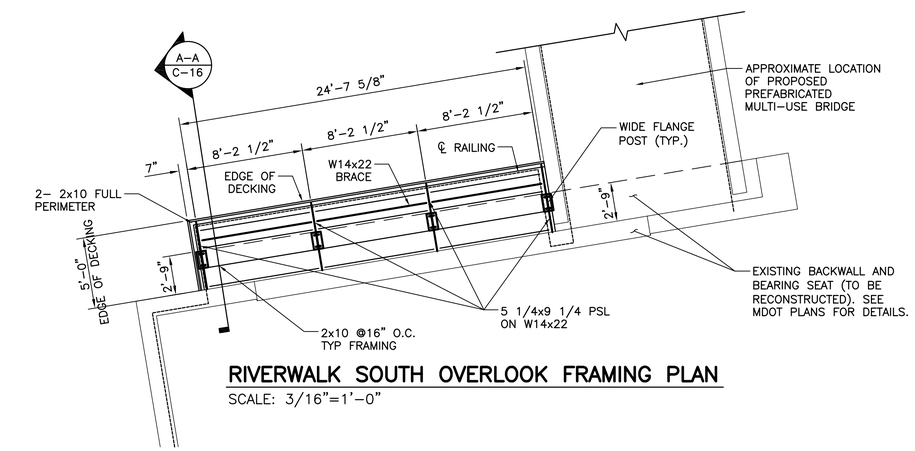

RIVERWALK SOUTH OVERLOOK FRAMING PLAN

SCALE: 3/16"=1'-0"

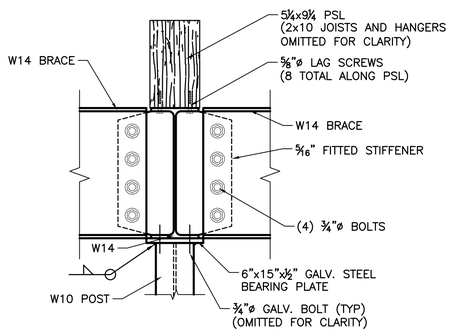

BRACE CONNECTION DETAIL

N.T.S.

NOTE:

1. THE FRAMING DIMENSIONS FOR THE OVERLOOKS SHOWN ON THIS SHEET ARE BASED ON AN APPROXIMATE (ASSUMED) TOTAL WIDTH OF THE PREFABRICATED MULTI–USE BRIDGE. THE DESIGN INTENT IS TO CONSTRUCT THE OVERLOOKS IMMEDIATELY ADJACENT TO THE EXTERIOR FACE OF THE PREFABRICATED BRIDGE TRUSS. THE CONTRACTOR SHALL COORDINATE CONSTRUCTION OF THE OVERLOOKS WITH THE DESIGN AND INSTALLATION OF THE MULTI–USE BRIDGE AND ADJUST THE GEOMETRY OF THE OVERLOOKS AS REQUIRED.

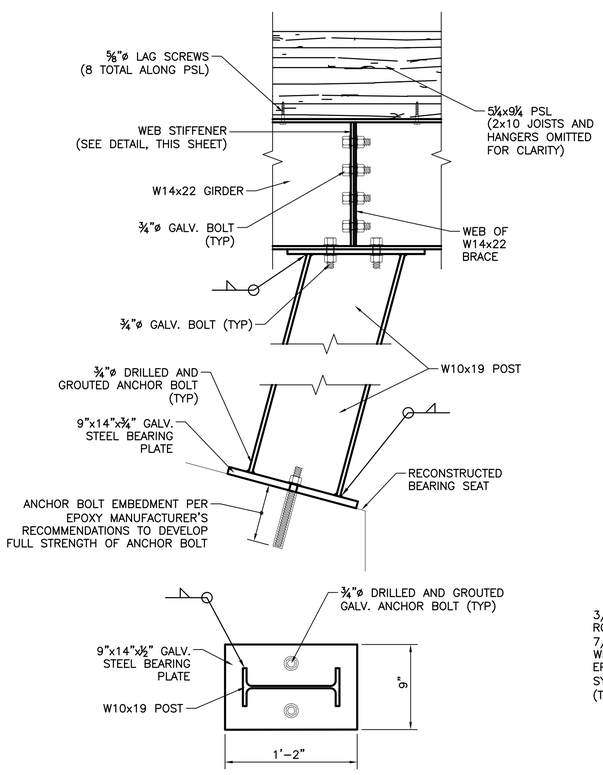

POST BASE PLATE DETAIL

N.T.S.

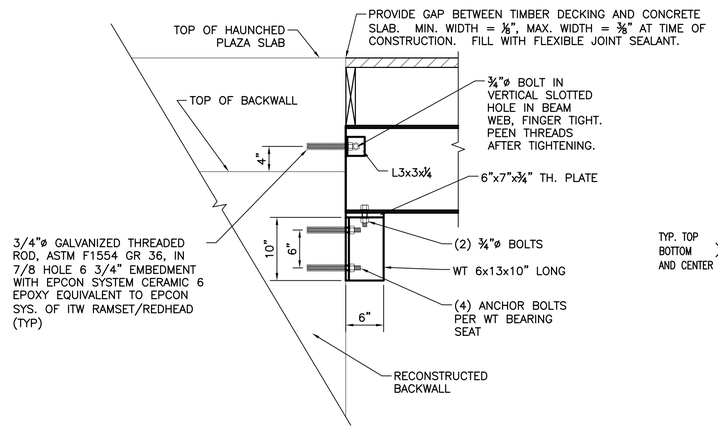

BEARING SEAT DETAIL

N.T.S.

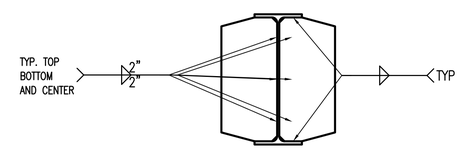

PROVIDE WEB STIFFENERS ON ALL BEAMS BEARING ON COLUMNS AND BEAMS SUPPORTING COLUMNS. USE 1/4" PLATE FOR BEAMS UP TO 12" DEEP, 5/16" PLATE FOR BEAMS 14" TO 18" DEEP 3/8" PLATE FOR ALL BEAMS OVER 18" DEEP.

WEB STIFFENER AT BRACE DETAIL

N.T.S.

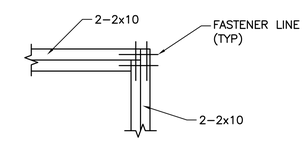

2x10 CORNER JOINT DETAIL

N.T.S.

Stantec Consulting Services Inc.
482 Payne Road, Scarborough ME. 04074
Tel. 207.883.3355 Fax. 207.883.3376 www.stantec.com

Project No. 21080963 | Scale (AS NOTED)

CITY OF WESTBROOK

STATE OF MAINE
AARON M. LACHANCE
No. 13294
LICENSED
PROFESSIONAL ENGINEER

P.E. NUMBER 13294
SIGNATURE
DATE OCTOBER 11, 2013

	BY	DATE
DESIGN–DETAILED	AML	9/4/13
CHECKED–REVIEWED	PRD	10/9/13
DESIGN2–DETAILED2	TWM	
DESIGN3–DETAILED3		
REVISIONS 1	revision1	revdate1
REVISIONS 2		
REVISIONS 3		
REVISIONS 4		
FIELD CHANGES		

HEART OF DOWNTOWN STREETSCAPE IMPROVEMENTS

RIVERWALK OVERLOOKS

SHEET NUMBER

C–16

SECTION 2

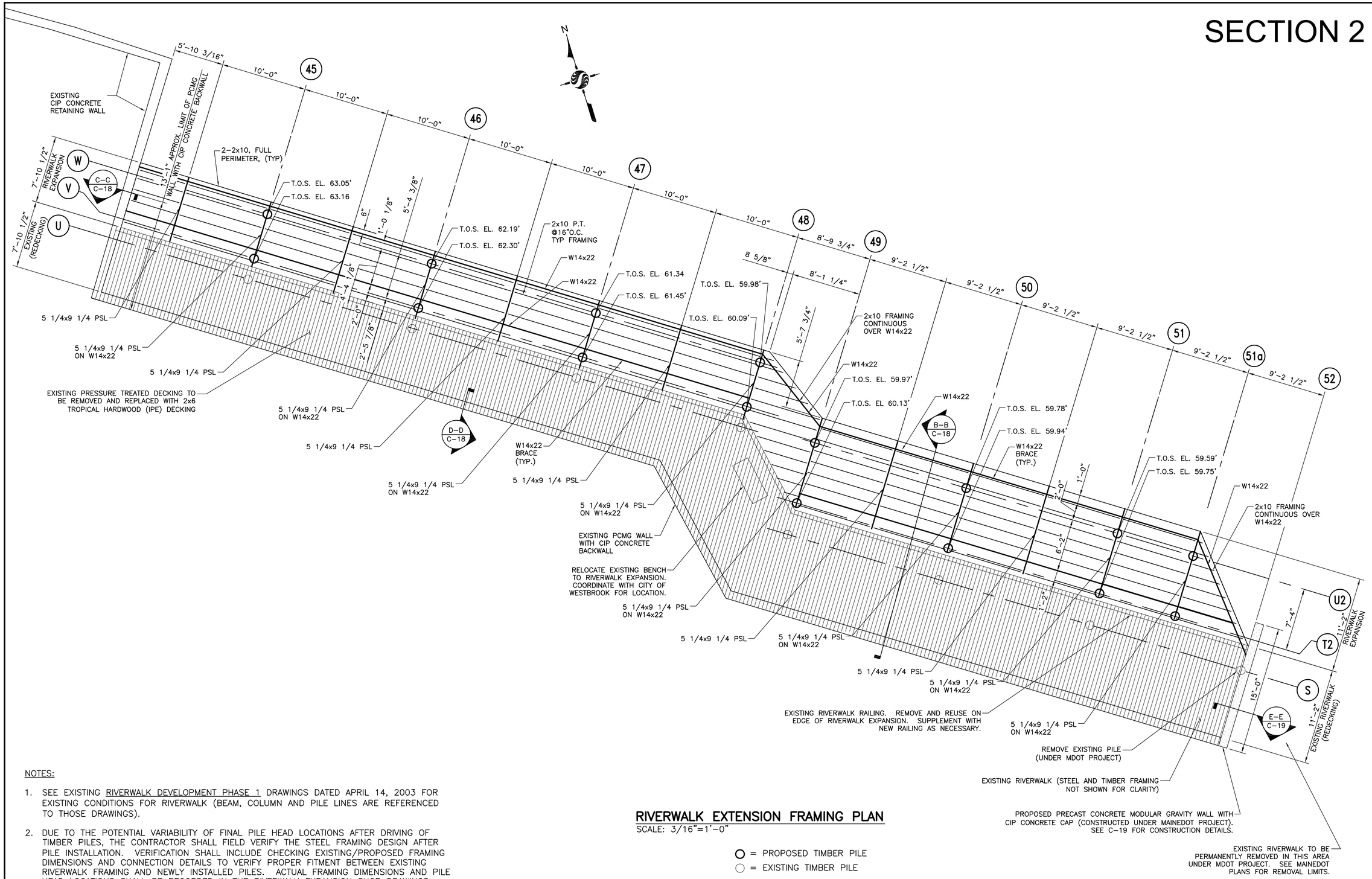

RIVERWALK EXTENSION FRAMING PLAN

SCALE: 3/16"=1'-0"

○ = PROPOSED TIMBER PILE

○ = EXISTING TIMBER PILE

T.O.S. = TOP OF STEEL

NOTES:

1. SEE EXISTING RIVERWALK DEVELOPMENT PHASE 1 DRAWINGS DATED APRIL 14, 2003 FOR EXISTING CONDITIONS FOR RIVERWALK (BEAM, COLUMN AND PILE LINES ARE REFERENCED TO THOSE DRAWINGS).
2. DUE TO THE POTENTIAL VARIABILITY OF FINAL PILE HEAD LOCATIONS AFTER DRIVING OF TIMBER PILES, THE CONTRACTOR SHALL FIELD VERIFY THE STEEL FRAMING DESIGN AFTER PILE INSTALLATION. VERIFICATION SHALL INCLUDE CHECKING EXISTING/PROPOSED FRAMING DIMENSIONS AND CONNECTION DETAILS TO VERIFY PROPER FITMENT BETWEEN EXISTING RIVERWALK FRAMING AND NEWLY INSTALLED PILES. ACTUAL FRAMING DIMENSIONS AND PILE HEAD LOCATIONS SHALL BE RECORDED IN THE RIVERWALK EXPANSION SHOP DRAWINGS.
3. SOME TIMBER PILES ARE EXPOSED BELOW THE 50-YEAR DESIGN WATER ELEVATION OF 53.2. TIMBER PILES AND RIVERWALK EXPANSION STRUCTURE ARE NOT DESIGNED TO WITHSTAND FORCES RESULTING FROM ICE FLOES. THE STRUCTURE SHOULD BE MONITORED FREQUENTLY DURING PERIODS OF ICE FLOES AND BE CLOSED IMMEDIATELY IF ICE FLOES FORM AND REACH THE ELEVATION OF THE TIMBER PILES.

Stantec Consulting Services Inc.
482 Payne Road, Scarborough ME. 04074
Tel. 207.883.3355 Fax. 207.883.3376 www.stantec.com

Project No. 21800963

Scale (AS NOTED)

CITY OF WESTBROOK

STATE OF MAINE
AARON M. LACHANCE
No. 13294
LICENSED
PROFESSIONAL ENGINEER

P.E. NUMBER 13294

SIGNATURE

DATE OCTOBER 11, 2013

	BY	DATE
DESIGN-DETAILED	AML	9/17/13
CHECKED-REVIEWED	SRW	10/17/13
DESIGN2-DETAILED2	TWM	
DESIGN3-DETAILED3	PRD	
REVISIONS 1	revision1	revdate1
REVISIONS 2		
REVISIONS 3		
REVISIONS 4		
FIELD CHANGES		

HEART OF DOWNTOWN STREETSCAPE IMPROVEMENTS

RIVERWALK EXPANSION AND REDECKING
SHEET 1 OF 2

SHEET NUMBER

C-17

SECTION 2

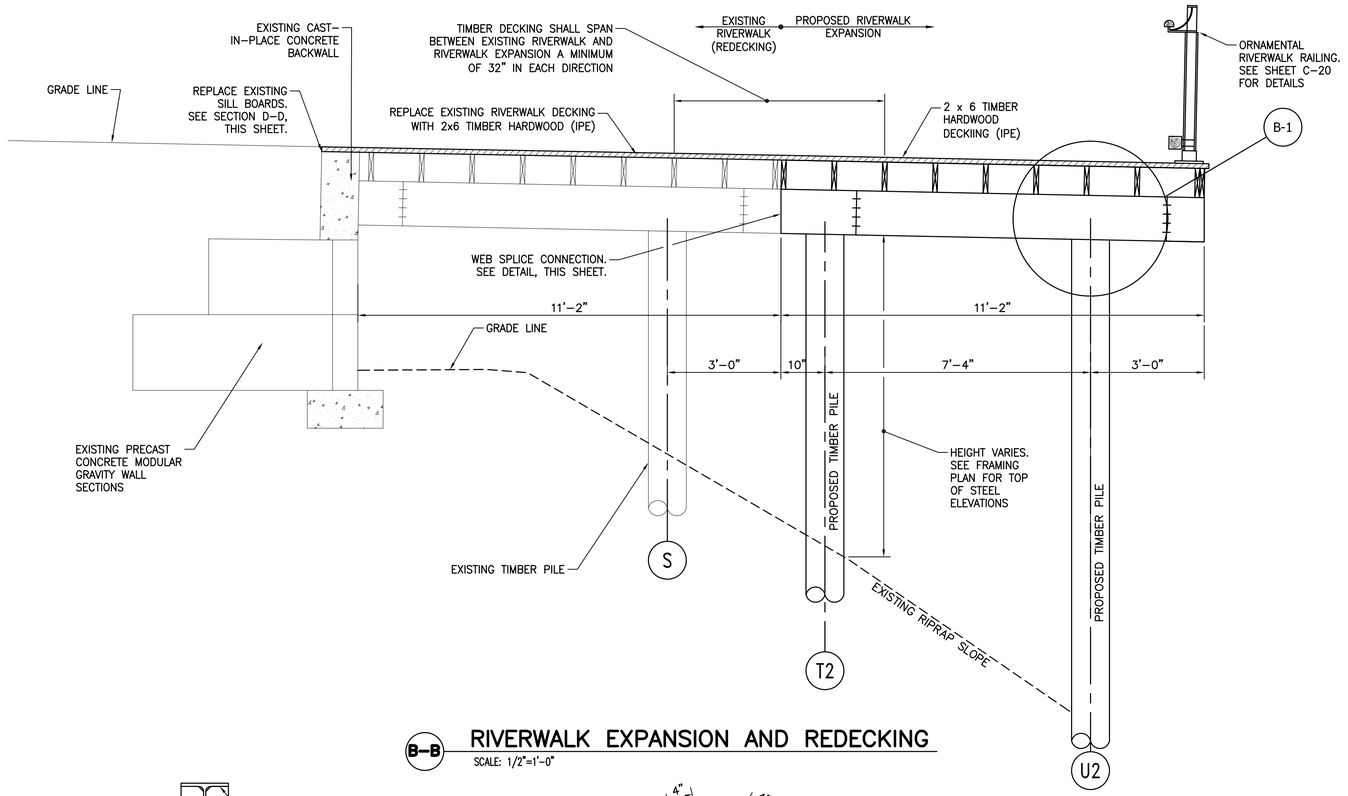

B-B RIVERWALK EXPANSION AND REDECKING
SCALE: 1/2"=1'-0"

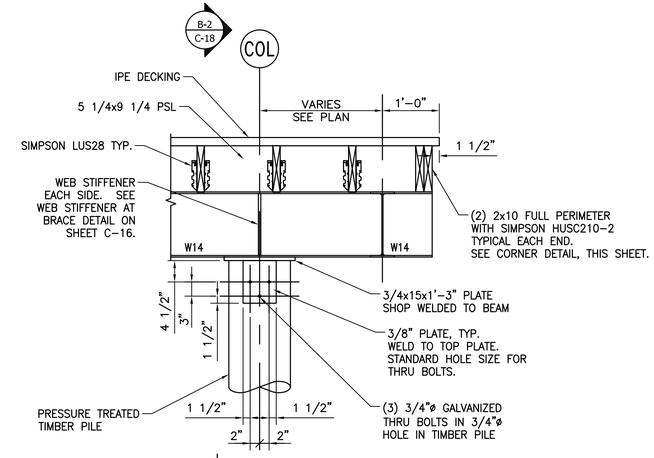

B-1 PILE CONNECTION DETAIL
SCALE: 3/4"=1'-0"

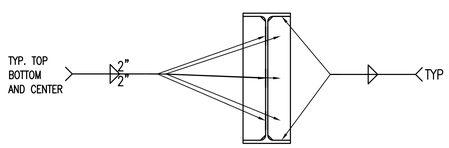

PROVIDE WEB STIFFENERS ON ALL BEAMS BEARING ON COLUMNS AND BEAMS SUPPORTING COLUMNS. USE 1/4" PLATE FOR BEAMS UP TO 12" DEEP, 5/16" PLATE FOR BEAMS 14" TO 18" DEEP 3/8" PLATE FOR ALL BEAMS OVER 18" DEEP.

WEB STIFFENER DETAIL
N.T.S.

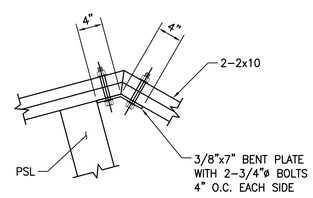

TYPICAL AT INSIDE AND OUTSIDE CORNERS WHERE 2-2x10 EXTEND BEYOND BEAM

2x10 FASCIA – CORNER JOINT DETAIL
N.T.S.

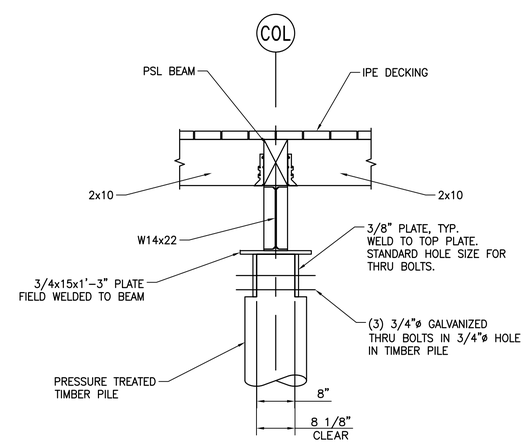

B-2 PILE CONNECTION DETAIL
SCALE: 3/4"=1'-0"

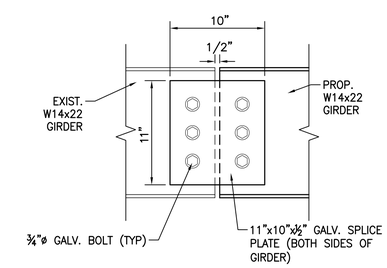

WEB SPLICE CONNECTION DETAIL
N.T.S.

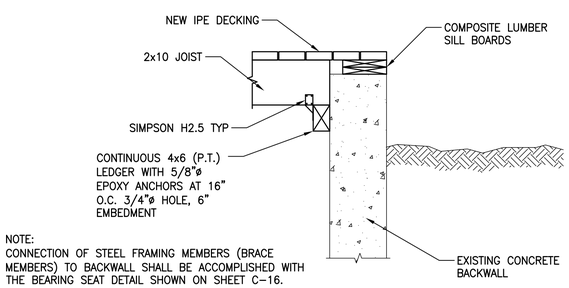

NOTE:
CONNECTION OF STEEL FRAMING MEMBERS (BRACE MEMBERS) TO BACKWALL SHALL BE ACCOMPLISHED WITH THE BEARING SEAT DETAIL SHOWN ON SHEET C-16.

C-C RIVERWALK FRAMING TO EXISTING BACKWALL CONNECTION
SCALE: 3/4"=1'-0"

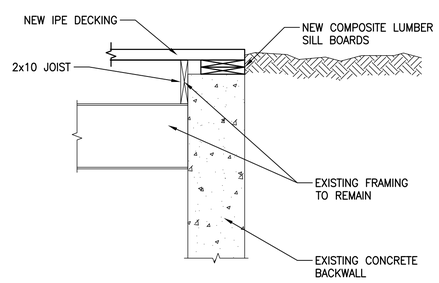

D-D SILL REPLACEMENT DETAIL
SCALE: 3/4"=1'-0"

Stantec Consulting Services Inc.
482 Payne Road, Scarborough ME. 04074
Tel. 207.883.3355 Fax. 207.883.3376 www.stantec.com

Project No. 21800963
Scale (AS NOTED)

CITY OF WESTBROOK

STATE OF MAINE
AARON M. LACHANCE
No. 13294
LICENSED
PROFESSIONAL ENGINEER

P.E. NUMBER 13294
SIGNATURE
DATE OCTOBER 11, 2013

	BY	DATE
DESIGN-DETAILED	SRW	9/17/13
CHECKED-REVIEWED	TWM	10/17/13
DESIGN2-DETAILED2		
DESIGN3-DETAILED3		
revision1		revdate1
REVISIONS 1		
REVISIONS 2		
REVISIONS 3		
REVISIONS 4		
FIELD CHANGES		

HEART OF DOWNTOWN STREETSCAPE IMPROVEMENTS

RIVERWALK EXPANSION AND REDECKING SHEET 2 OF 2

SHEET NUMBER
C-18

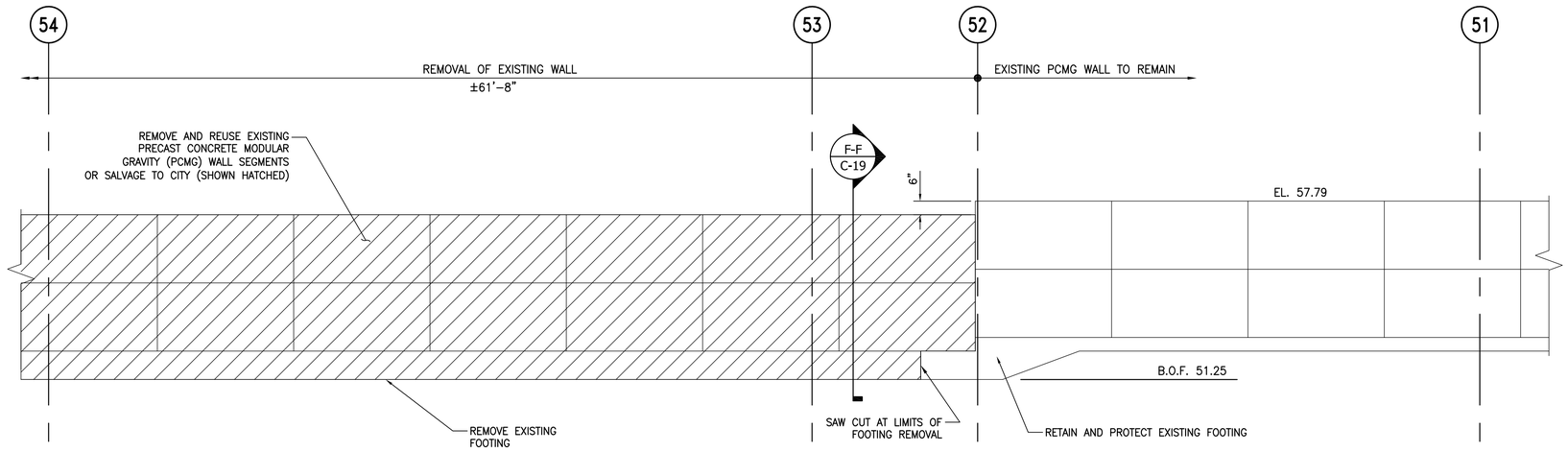

PRECAST WALL RECONSTRUCTION ELEVATION

SCALE: 3/8"=1'-0" (LOOKING SOUTH)

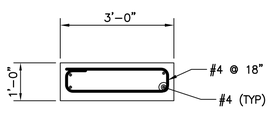

PRECAST WALL FOOTING DETAIL

SCALE: 1/2"=1'-0"

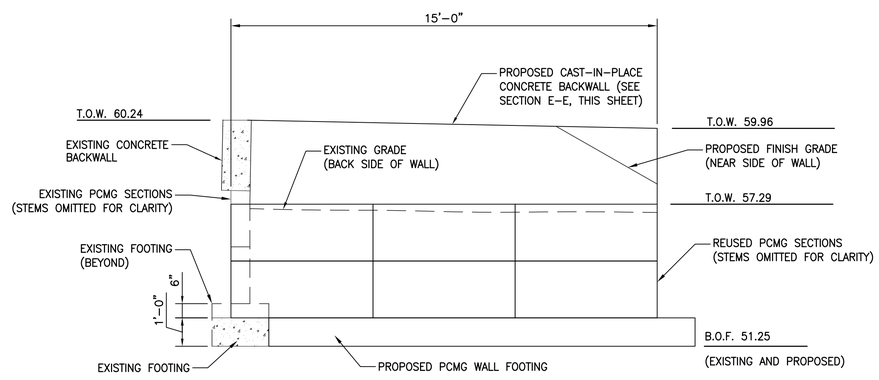

F-F PRECAST WALL RECONSTRUCTION

SCALE: 3/8"=1'-0"

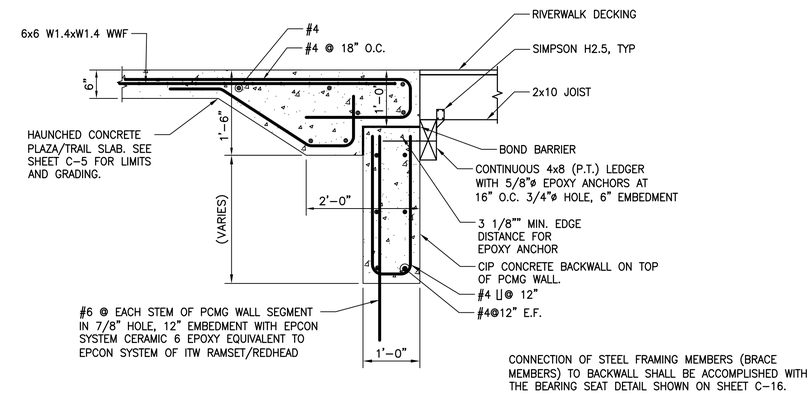

E-E RIVERWALK TO PROPOSED BACKWALL CONNECTION

SCALE: 3/4"=1'-0"

NOTE:

1. CAST-IN-PLACE CONCRETE BACKWALL REMOVAL AND RECONSTRUCTION ON TOP OF RELOCATED PCMG WALL SEGMENTS SHALL BE INCIDENTAL TO SPECIAL WORK ITEM 910.301, REMOVE AND RESET PCMG WALL (PAID FOR UNDER THE MAINEDOT CONTRACT). THIS WORK SHALL ALSO INCLUDE CONNECTION OF THE EXISTING RIVERWALK FRAMING TO THE NEW BACKWALL.

2. EXISTING BOTTOM OF FOOTING AND TOP OF WALL ELEVATIONS SHOWN IN PRECAST WALL RECONSTRUCTION DETAILS WERE TAKEN FROM DESIGN ELEVATIONS SHOWN ON THE RIVERWALK DEVELOPMENT PHASE 1 DRAWINGS DATED APRIL 14, 2003. CONTRACTOR SHALL VERIFY ACTUAL ELEVATIONS PRIOR TO START OF PCMG WALL RECONSTRUCTION.

Stantec Consulting Services Inc.
482 Payne Road, Scarborough ME. 04074
Tel. 207.883.3355 Fax. 207.883.3376 www.stantec.com

Project No. 21800963

Scale (AS NOTED)

CITY OF WESTBROOK

STATE OF MAINE
AARON M. LACHANCE
No. 13294
LICENSED
PROFESSIONAL ENGINEER

P.E. NUMBER 13294
SIGNATURE

DATE OCTOBER 11, 2013

	BY	DATE
DESIGN-DETAILED	AML	
CHECKED-REVIEWED	PRD	
DESIGN2-DETAILED2		
DESIGN3-DETAILED3		
REVISIONS 1	SRW	9/17/13
REVISIONS 2	TWM	10/17/13
REVISIONS 3		
REVISIONS 4		
FIELD CHANGES		
revision1		revdate1

HEART OF DOWNTOWN STREETSCAPE IMPROVEMENTS

PRECAST CONCRETE WALL RECONSTRUCTION DETAILS

SHEET NUMBER

C-19

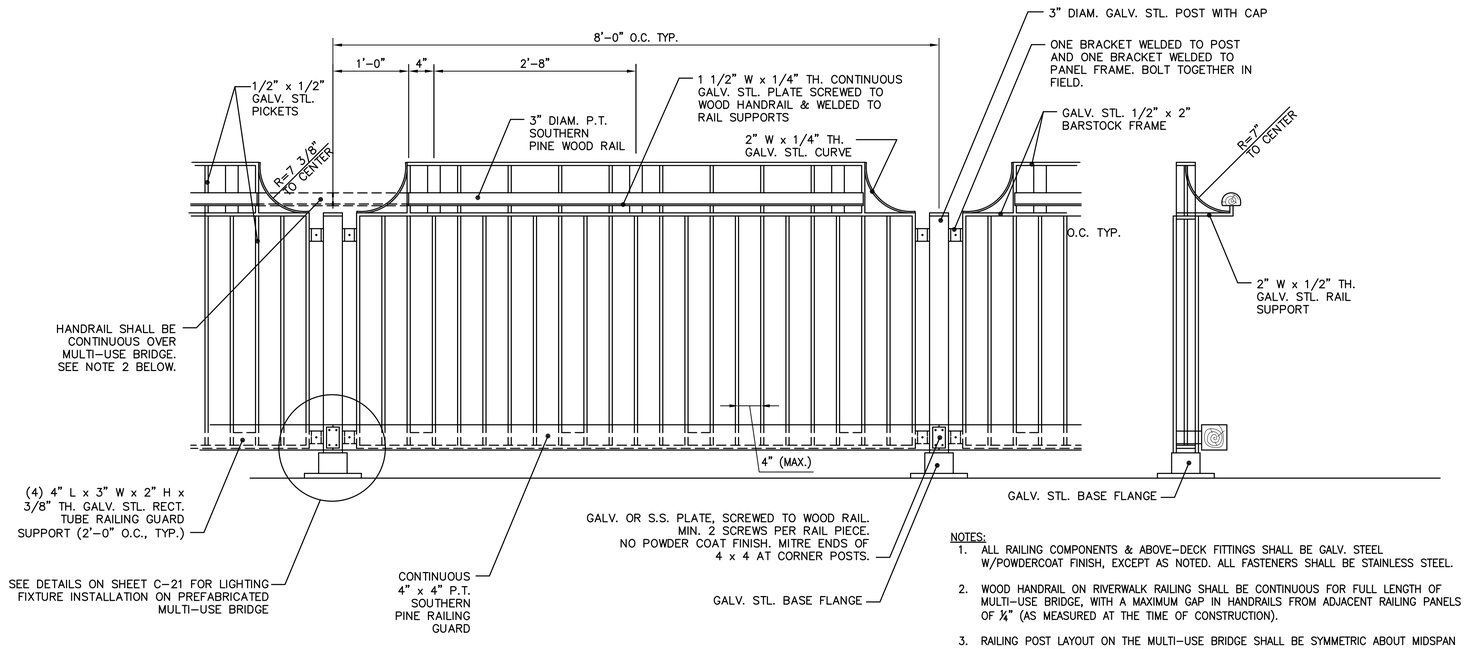

NOTES:
1. ALL RAILING COMPONENTS & ABOVE-DECK FITTINGS SHALL BE GALV. STEEL W/POWDERCOAT FINISH, EXCEPT AS NOTED. ALL FASTENERS SHALL BE STAINLESS STEEL.
2. WOOD HANDRAIL ON RIVERWALK RAILING SHALL BE CONTINUOUS FOR FULL LENGTH OF MULTI-USE BRIDGE, WITH A MAXIMUM GAP IN HANDRAILS FROM ADJACENT RAILING PANELS OF ¼" (AS MEASURED AT THE TIME OF CONSTRUCTION).
3. RAILING POST LAYOUT ON THE MULTI-USE BRIDGE SHALL BE SYMMETRIC ABOUT MIDSPAN ON BOTH SIDES OF THE BRIDGE.

RIVERWALK RAILING DETAILS
SCALE: N.T.S.

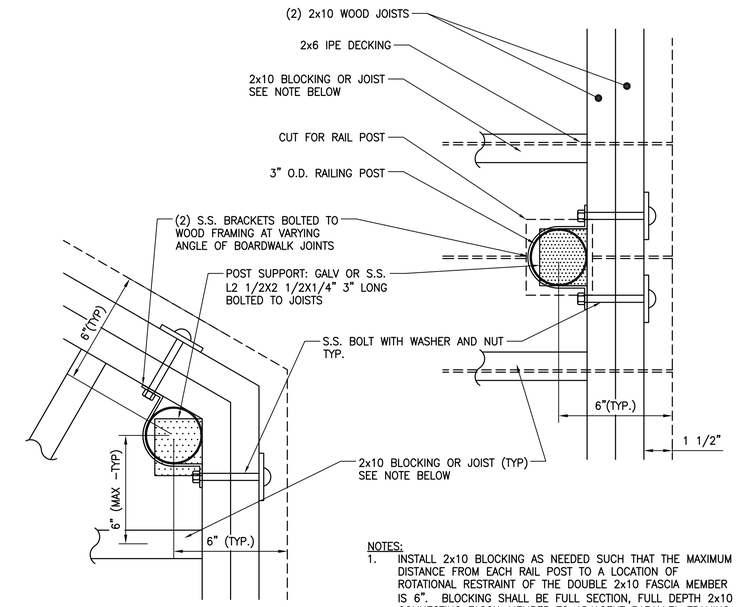

NOTES:
1. INSTALL 2x10 BLOCKING AS NEEDED SUCH THAT THE MAXIMUM DISTANCE FROM EACH RAIL POST TO A LOCATION OF ROTATIONAL RESTRAINT OF THE DOUBLE 2x10 FASCIA MEMBER IS 6". BLOCKING SHALL BE FULL SECTION, FULL DEPTH 2x10 CONNECTING FASCIA MEMBER TO ADJACENT PARALLEL FRAMING MEMBER.
2. LESS THAN 1" OF WOOD BETWEEN OUTSIDE EDGE OF POST HOLE AND EDGE OF DECK BOARD IS NOT ACCEPTABLE.
3. SUBMIT SHOP DRAWINGS. ILLUSTRATE SIZE AND TYPE OF ALL FASTENERS.

RAILING MOUNTING WOOD DECK
SCALE: 3"=1'-0"

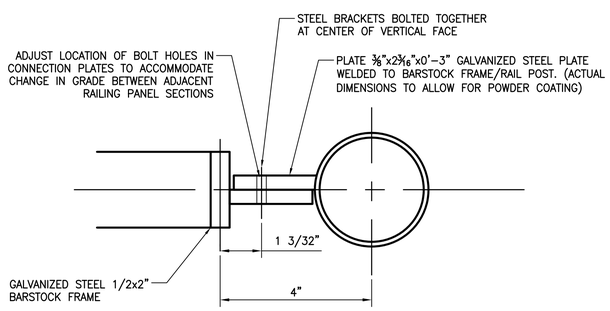

RAIL PANEL AND RAIL POST MOUNTING
SCALE: NTS

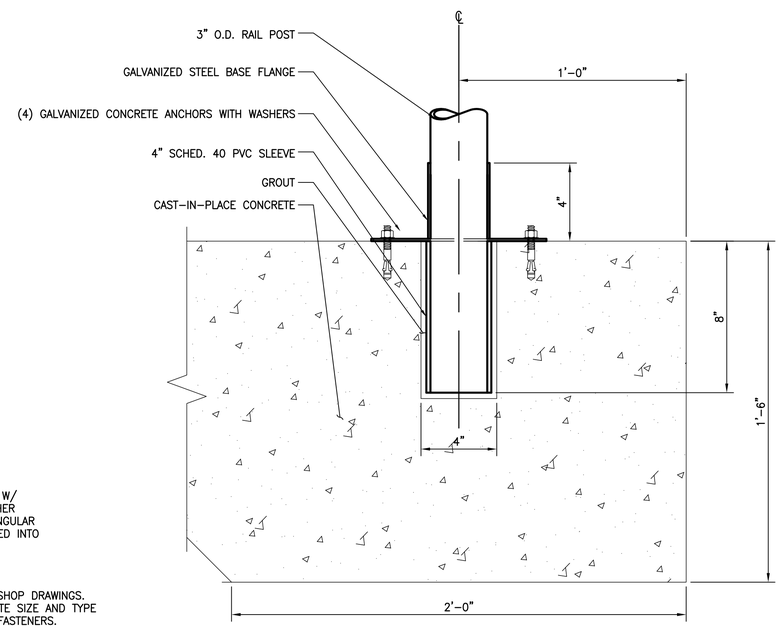

NOTE:
FOR RAILING MOUNTED OUTSIDE LIMITS OF CONCRETE SLAB (AND NOT ON RIVERWALK STRUCTURES), RAILING SHALL BE MOUNTED USING THIS DETAIL, CENTERED IN A 16" DIAMETER CONCRETE FOUNDATION. FOUNDATION SHALL EXTEND A MINIMUM DISTANCE OF 4'-0" BELOW PROPOSED FINISHED GRADE. CONSTRUCTION OF FOUNDATION SHALL BE INCIDENTAL TO RAIL CONSTRUCTION.

RAILING MOUNTING TO CONCRETE
SCALE: NTS

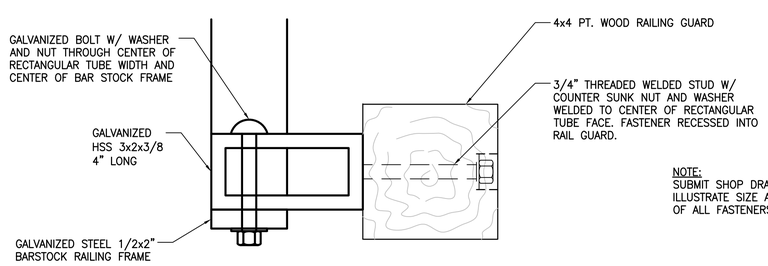

NOTE:
SUBMIT SHOP DRAWINGS. ILLUSTRATE SIZE AND TYPE OF ALL FASTENERS.

RAIL GUARD MOUNTING
SCALE: NTS

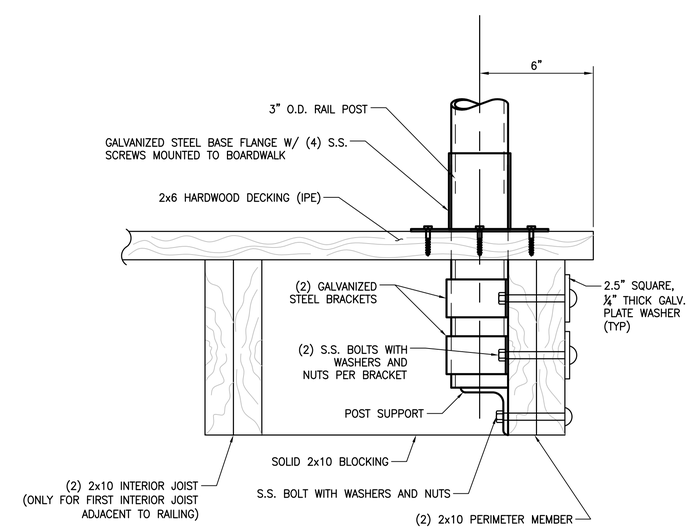

RAILING MOUNTING WOOD DECK SECTION
SCALE: 3"=1'-0"

Stantec Consulting Services Inc.
482 Payne Road, Scarborough ME. 04074
Tel. 207.883.3355 Fax. 207.883.3376 www.stantec.com

Project No. 21080963 | Scale (AS NOTED)

CITY OF WESTBROOK

STATE OF MAINE — AARON M. LACHANCE No. 13294 — LICENSED PROFESSIONAL ENGINEER

SIGNATURE | P.E. NUMBER 13294 | DATE OCTOBER 11, 2013

	BY	DATE
DESIGN-DETAILED	AML	9/1/13
CHECKED-REVIEWED	PRD	10/11/13
DESIGN2-DETAILED2		
DESIGN3-DETAILED3		
REVISIONS 1	revision1	revdate1
REVISIONS 2		
REVISIONS 3		
REVISIONS 4		
FIELD CHANGES		

HEART OF DOWNTOWN STREETSCAPE IMPROVEMENTS

ORNAMENTAL RAILING DETAILS SHEET 1 OF 2

SHEET NUMBER
C-20

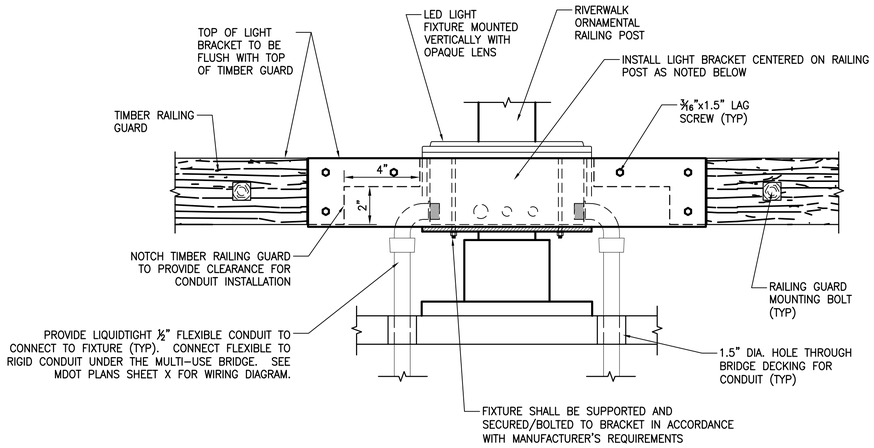

BRACKET INSTALLED IN RAIL

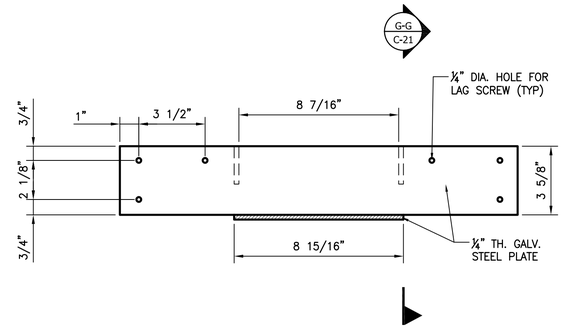

BRACKET ONLY

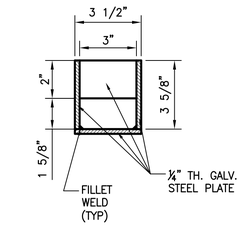

G-G LIGHT BRACKET
SCALE: 3"=1'-0"

MULTI-USE BRIDGE LIGHT BRACKET – ELEVATION

SCALE: 3"=1'-0"

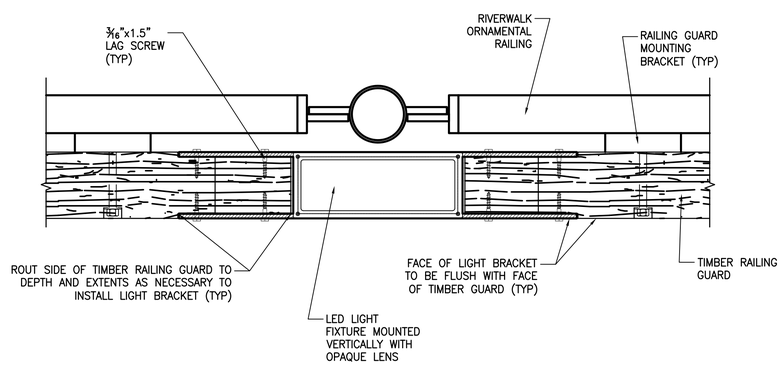

BRACKET INSTALLED IN RAIL

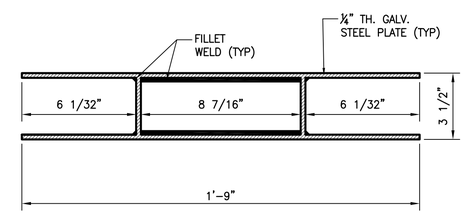

BRACKET ONLY

MULTI-USE BRIDGE LIGHT BRACKET – PLAN

SCALE: 3"=1'-0"

NOTES:

1. FIXTURE MOUNTING LOCATIONS ON MULTI-USE BRIDGE SHALL BE COORDINATED WITH MULTI-USE BRIDGE DESIGN/INSTALLATION AND ORNAMENTAL RAILING DESIGN/INSTALLATION. THE DESIGN INTENT IS TO LOCATE LIGHT FIXTURES AT THE RAILING POSTS NEAREST THE THIRD POINTS OF THE BRIDGE SPAN.
2. RAILING POST LAYOUT SHALL BE SYMMETRIC ABOUT MIDSPAN OF THE MULTI-USE BRIDGE. SEE MAINEDOT PLANS FOR FURTHER INFORMATION REGARDING LIGHT FIXTURE LOCATIONS AND ORNAMENTAL RAILING LAYOUT ON THE MULTI-USE BRIDGE.

Stantec Consulting Services Inc.
482 Payne Road, Scarborough ME. 04074
Tel. 207.883.3355 Fax. 207.883.3376 www.stantec.com

Project No. 21800963
Scale (AS NOTED)

CITY OF WESTBROOK

STATE OF MAINE
AARON M. LACHANCE
No. 13294
LICENSED
PROFESSIONAL ENGINEER

	BY	DATE
DESIGN-DETAILED	AML	9/1/13
CHECKED-REVIEWED	MLC	10/1/13
DESIGN2-DETAILED2	TWM	
DESIGN3-DETAILED3		
REVISIONS 1	revision1	revdate1
REVISIONS 2		
REVISIONS 3		
REVISIONS 4		
FIELD CHANGES		

SIGNATURE
P.E. NUMBER 13294
DATE OCTOBER 11, 2013

HEART OF DOWNTOWN STREETSCAPE IMPROVEMENTS

ORNAMENTAL RAILING DETAILS SHEET 2 OF 2

SHEET NUMBER
C-21
24 OF 24