STATE OF MAINE
DEPARTMENT OF TRANSPORTATION

SPECIFICATIONS

Design: Load and Resistance Factor Design per AASHTO LRFD Bridge Design Specifications, 6th Edition 2012 and interim specifications through 2013.

DESIGN LOADING

Live Load ..... HL - 93 Modified for Strength I (Truck only increased 25%)

TRAFFIC DATA

Current (2010) AADT	5890
Future (2030) AADT	7070
DHV - % of AADT	10%
Design Hour Volume	707
Heavy Trucks (% of AADT)	12%
Heavy Trucks (% of DHV)	9%
Directional Distribution (% of DHV)	58%
18 Kip Equivalent P 2.0	856
18 Kip Equivalent P 2.5	815
Design Speed	30 mph

HYDROLOGIC DATA

Drainage Area	6671 sq mi
Ordinary High Water Discharge (Q1.1)	46,216 cfs
Design Discharge (Q50)	133,300 cfs
Check Discharge (Q100)	148,800 cfs
Headwater Elevation (Q1.1)	133.4 ft
Headwater Elevation (Q25)	146.2 ft
Headwater Elevation (Q50)	147.7 ft
Headwater Elevation (Q100)	149.1 ft
Discharge Velocity (Q1.1)	5.8 fps
Discharge Velocity (Q50)	6.6 fps
Discharge Velocity (Q100)	7.0 fps

MATERIALS

Concrete:
- Curb, Sidewalk, End Posts ..... Class "LP"
- Seals ..... Class "S"
- All Other ..... Class "A"

Reinforcing Steel ..... ASTM A 615/A 615M, Grade 60
Glass Fiber Reinforced Polymer (GFRP) ..... CSA S807-10, ACI 440.1R-06

Structural Steel:
- All Material (except as noted) ..... ASTM A 709, Grade 50W (unpainted)
- High Strength Bolts ..... ASTM A 325, Type 3

BASIC DESIGN STRESSES

Concrete (Class A)	f 'c = 4350 psi
Concrete (Class LP)	5000 psi
Concrete (Class S)	3000 psi
Reinforcing Steel	f y = 60,000 psi
Glass Fiber Reinforced Polymer (GFRP):	
Minimum Tensile Strength (Straight)	100,000 psi
Minimum Tensile Strength (Bent)	50,000 psi
Minimum Elastic Modulus	5,850,000 psi
Structural Steel:	
ASTM A 709, Grade 50W	F y = 50,000 psi
ASTM A 325	F μ = 120,000 psi

HOWLAND - ENFIELD
PENOBSCOT COUNTY
PENOBSCOT RIVER BRIDGE
OVER
PENOBSCOT RIVER
ROUTE 155/6
PROJECT NO. BH-1670(500)X
PROJECT LENGTH 0.42 mi.
BRIDGE NO. 2660

UTILITIES

Town of Enfield (Sewer)
Town of Howland (Sewer)
Town of Howland (Water)

Polaris Cable Services (on Bridge)
OTT Communications (on Bridge)
Time Warner Cable Inc. (on Bridge)
Emera Maine

MAINTENANCE OF TRAFFIC

Maintain two lanes of traffic (one each direction) over existing bridge and approaches during construction.

LIST OF DRAWINGS

Title Sheet	1
Estimated Quantities	2
General Notes	3
Earthwork Summary & General Notes	4
Drainage Summary	5
Plans 1-4	6-9
Profiles 1-4 Route 155/6	10-13
Profile - Route 116 and South Street	14
Profile - Terrio St. and Old County Road	15
Typical Sections 1-3	16-18
Intersection Grading and Layout Plan 1-3	19-21
Cross Sections - Route 155/6 (17 shts)	22-38
Cross Sections - Terrio Street (2 shts)	39-40
Cross Sections - Route 116 (7 shts)	41-47
Cross Sections - Old County Road (South) (2 shts)	48-49
Cross Sections - Old County Road (North) (2 shts)	50-51
Boring Location Plan (2 shts)	52-53
Interpretive Subsurface Profile	54
Boring Logs (4 shts)	55-58
Bridge Plan & Elevation	59
Geometric Layout Plan	60
Abutment Sheets (10 shts)	61-70
Pier Sheets (10 shts)	71-80
Bearing Layout	81
Bearing Details	82
Framing Layout Plan	83
Framing Plan Span 1-4	84-87
Girder Elevation 1-2	88-89
Girder Details 1-2	90-91
Splayed Girder Details	92
Camber Diagram	93
Dead Load Deflections	94
Girder Stress Diagram & BOS Elevations	95
Transverse Section Spans No. 1-3	96-98
Superstructure Slab Spans No. 1-4	99-102
Slab Reinforcing Plan No. 1-4	103-106
Slab Reinforcing Section	107
Partial Slab Reinforcing Plan	108
Slab Reinforcing Details 1-2	109-110
Slab Placement Sequence	111
Bridge Drain Details	112
Concrete Transition Barrier 1-4	113-116
Expansion Dam Details 1-2	117-118
Curtain Trough Details 1-2	119-120
Reinforcing Schedule 1-2	121-122
Lighting Details & Notes	123
Right of Way Plans 1-4	124-127

PROJECT LOCATION:	Penobscot River Bridge # 2660 on the Howland - Enfield TL which carries Route 155/6 over the Penobscot River. Latitude 45°14'11" Longitude 68°39'6"
PROGRAM AREA:	Bridge Program
OUTLINE OF WORK:	Bridge Replacement

WIN 16705.00

BH-1670(500)X

STATE OF MAINE
DEPARTMENT OF TRANSPORTATION
APPROVED
COMMISSIONER: DATE 1/2/15
CHIEF ENGINEER: DATE 1-2-15

STATE OF MAINE RICHARD M. HEBERT No. 8210 LICENSED PROFESSIONAL ENGINEER

SIGNATURE 8210
P.E. NUMBER
12-09-14
DATE

PROJECT INFORMATION

PROGRAM	BRIDGE
PROJECT MANAGER	S. BOOGE
DESIGNER	R. M. HEBERT
CONSULTANT	T.Y. LIN
PROJECT RESIDENT	
CONTRACTOR	
PROJECT COMPLETION DATE	

HOWLAND - ENFIELD
PENOBSCOT RIVER BR.

TITLE SHEET

SHEET NUMBER
1
OF 127

Filename:\CADD\HIGHWAY\MSTA\Title.dgn Division: Username: Date:12/16/2014

ESTIMATED QUANTITIES			
ITEM NO.	DESCRIPTION	QUANTITY	UNIT
201.11	CLEARING	0.7	AC
201.23	REMOVING SINGLE TREE TOP ONLY	3	EA
201.24	REMOVE STUMP	5	EA
202.08	REMOVING BUILDING NO. 1	1	LS
202.08	REMOVING BUILDING NO. 2	1	LS
202.15	REMOVING EXISTING MANHOLE OR CATCH BASIN	3	EA
202.19	REMOVING EXISTING BRIDGE (760 T, 1600 CY)	1	LS
203.20	COMMON EXCAVATION	5723	CY
203.24	COMMON BORROW	188	CY
203.25	GRANULAR BORROW	3750	CY
206.061	STRUCTURAL EARTH EXCAVATION - DRAINAGE MINOR STRUCTURES BELOW GRADE	50	CY
206.082	STRUCTURAL EARTH EXCAVATION - MAJOR STRUCTURES, PLAN QUANTITY	95	CY
206.10	STRUCTURAL EARTH EXCAVATION - PIERS	3310	CY
304.16	AGGREGATE BASE COURSE- TYPE C	7300	CY
403.207	HOT MIX ASPHALT, 19.0 MM NOMINAL MAXIMUM SIZE	1225	Ton
403.2081	HOT MIX ASPHALT - 12.5 MM NOMINAL MAXIMUM SIZE (POLYMER MODIFIED)	990	Ton
403.209	HOT MIX ASPHALT, 9.5 MM NOMINAL MAXIMUM SIZE (SIDEWALKS, DRIVES, ISLANDS & INC.)	55	Ton
403.213	HOT MIX ASPHALT, 12.5 MM NOMINAL MAXIMUM SIZE, (BASE & INTERMEDIATE BASE COURSE)	990	Ton
409.15	BITUMINOUS TACK COAT, APPLIED	505	G
501.239	DYNAMIC LOADING TEST, PROVIDING FOR	11	EA
501.50	STEEL H-BEAM PILE, 89 LBS/FT, DELIVERED	1080	LF
501.501	STEEL H-BEAM PILE, 89 LBS/FT, IN-PLACE	1080	LF
501.54	STEEL H-BEAM PILE, 117 LBS/FT, DELIVERED	1990	LF
501.541	STEEL H-BEAM PILE, 117 LBS/FT, IN-PLACE	1990	LF
501.90	PILE TIPS	100	EA
501.91	PILE SPLICES	109	EA
501.92	PILE DRIVING EQUIPMENT MOBILIZATION	1	LS
502.219	STRUCTURAL CONCRETE ABUTMENTS AND RETAINING WALLS (605 CY)	1	LS
502.239	STRUCTURAL CONCRETE PIERS (759 CY)	1	LS
502.24	STRUCTURAL CONCRETE PIERS (PLACED UNDER WATER) (PIER 1)	680	CY
502.249	STRUCTURAL CONCRETE PIERS (PLACED UNDER WATER) (PIERS 2 & 3) (1512 CY)	1	LS
502.26	STRUCTURAL CONCRETE ROADWAY AND SIDEWALK SLAB ON STEEL BRIDGES (1068 CY)	1	LS
502.31	STRUCTURAL CONCRETE APPROACH SLAB (32 CY)	1	LS
502.49	STRUCTURAL CONCRETE CURBS AND SIDEWALKS (431 CY)	1	LS
502.703	FRP DOWNSPOUT	2	EA
502.77	FRP BRIDGE DRAIN - TYPE B	14	EA
502.77	FRP BRIDGE DRAIN - TYPE G	4	EA
503.12	REINFORCING STEEL, FABRICATED AND DELIVERED	225300	LB
503.13	REINFORCING STEEL, PLACING	225300	LB
503.14	EPOXY-COATED REINFORCING STEEL, FABRICATED AND DELIVERED	25400	LB
503.15	EPOXY-COATED REINFORCING STEEL, PLACING	25400	LB
504.702	STRUCTURAL STEEL FABRICATED AND DELIVERED, WELDED (2110000 LB)	1	LS
504.71	STRUCTURAL STEEL ERECTION (2110000 LB)	1	LS
505.08	SHEAR CONNECTORS (9201 EA)	1	LS
507.0821	STEEL BRIDGE RAILING, 3 BAR (938 LF)	1	LS
507.0831	STEEL BRIDGE RAILING, 4 BAR (957 LF)	1	LS
508.14	HIGH PERFORMANCE WATERPROOFING MEMBRANE (3190 SY)	1	LS
511.07	COFFERDAM: PIER NO. 1	1	LS
511.07	COFFERDAM: PIER NO. 2	1	LS
511.07	COFFERDAM: PIER NO. 3	1	LS
512.081	FRENCH DRAINS (165 LF)	1	LS
514.06	CURING BOX FOR CONCRETE CYLINDERS	1	EA
515.21	PROTECTIVE COATING FOR CONCRETE SURFACES (1850 SY)	1	LS
521.23	EXPANSION DEVICE - FINGER JOINT	2	EA
521.32	FABRIC TROUGH FOR FINGER JOINT	2	EA
523.52	BEARING INSTALLATION	27	EA
523.5551	POT OR DISC BEARINGS, FIXED	3	EA
523.5552	POT OR DISC BEARINGS, EXPANSION	24	EA
526.301	TEMPORARY CONCRETE BARRIER- TYPE 1 (50 LF)	1	LS
526.34	PERMANENT CONCRETE TRANSITION BARRIER	1	EA
526.3401	PERMANENT CONCRETE TRANSITION BARRIER, MODIFIED	3	EA
530.30	GLASS FIBER REINFORCED POLYMER, FABRICATED AND DELIVERED	383000	LF
530.31	GLASS FIBER REINFORCED POLYMER, PLACING	383000	LF
603.155	12" RCP CLASS III	52	LF
603.159	12" CULVERT PIPE OPTION III	20	LF
603.16	15" CULVERT PIPE OPTION 1	80	LF
603.169	15" CULVERT PIPE OPTION III	32	LF
603.175	18" RCP CLASS III	80	LF
603.179	18" CULVERT PIPE OPTION III	88	LF
603.195	24" RCP CLASS III	72	LF
603.199	24" CULVERT PIPE OPTION III	130	LF
603.55	CONCRETE PIPE TIES	5	GP

ESTIMATED QUANTITIES			
ITEM NO.	DESCRIPTION	QUANTITY	UNIT
604.09	CATCH BASIN TYPE BI	1	EA
604.092	CATCH BASIN TYPE BI-C	6	EA
604.093	60" CATCH BASIN TYPE BI	2	EA
604.096	60" CATCH BASIN TYPE BI-C	1	EA
604.18	ADJUST MANHOLE OR CB TO GRADE	3	EA
604.244	CATCH BASIN TYPE F4	1	EA
604.247	CATCH BASIN TYPE F5-C	1	EA
605.09	6" UNDERDRAIN TYPE B	1075	LF
605.10	6" UNDERDRAIN OUTLET	20	LF
605.11	12" UNDERDRAIN TYPE C	155	LF
606.1721	BRIDGE TRANSITION - TYPE 1	4	EA
606.23	GUARDRAIL TYPE 3C - SINGLE RAIL	390	LF
606.232	GUARDRAIL TYPE 3C - OVER 15' RADIUS	188	LF
606.259	ANCHORAGE ASSEMBLY	1	EA
606.265	TERMINAL END - SINGLE RAIL - GALVANIZED STEEL	1	EA
606.353	REFLECTORIZED FLEXIBLE GUARDRAIL MARKER	4	EA
606.356	UNDERDRAIN DELINEATOR POST	1	EA
606.79	GUARDRAIL 350 FLARED TERMINAL	2	EA
607.17	CHAIN LINK FENCE - 6'	170	LF
608.26	CURB RAMP DETECTABLE WARNING FIELD	18	SF
609.31	CURB TYPE 3	830	LF
610.08	PLAIN RIPRAP	5086	CY
610.18	STONE DITCH PROTECTION	29	CY
613.319	EROSION CONTROL BLANKET	580	SY
615.07	LOAM	440	CY
618.13	SEEDING METHOD NUMBER 1, PLAN QUANTITY	5	Unit
618.14	SEEDING METHOD NUMBER 2, PLAN QUANTITY	57	Unit
618.141	SEEDING METHOD NUMBER 3, PLAN QUANTITY	14	Unit
619.1201	MULCH	76	Unit
619.1401	EROSION CONTROL MIX	10	CY
620.58	EROSION CONTROL GEOTEXTILE	4095	SY
626.22	NON-METALIC CONDUIT	1200	LF
627.18	12" SOLID WHITE PAVEMENT MARKING LINE	110	LF
627.733	4" WHITE OR YELLOW PAINTED PAVEMENT MARKING LINE	7525	LF
627.76	TEMPORARY PAVEMENT MARKING LINE, WHITE OR YELLOW	1	LS
629.05	HAND LABOR, STRAIGHT TIME	40	HR
631.10	AIR COMPRESSOR (INCLUDING OPERATOR)	5	HR
631.11	AIR TOOL (INCLUDING OPERATOR)	5	HR
631.12	ALL PURPOSE EXCAVATOR (INCLUDING OPERATOR)	20	HR
631.172	TRUCK - LARGE (INCLUDING OPERATOR)	30	HR
631.20	STUMP CHIPPER RENTAL (INCLUDING OPERATOR)	5	HR
631.221	SMALL FRONT END LOADER (INCLUDING OPERATOR)	20	HR
631.32	CULVERT CLEANER (INCLUDING OPERATORS)	5	HR
634.160	HIGHWAY LIGHTING	1	LS
634.210	CONVENTIONAL LIGHT STANDARD	7	EA
634.25	SERVICE POLE COMPLETE w/CABINET & CONTR	2	EA
637.071	DUST CONTROL	1	LS
639.18	FIELD OFFICE TYPE A	1	EA
645.106	DEMOUNT REGULATORY, WARNING, CONFIRMATION AND ROUTE MARKER SIGNS	4	EA
645.116	REINSTALL REGULATORY, WARNING, CONFIRMATION AND ROUTE MARKER SIGNS	4	EA
652.311	TYPE II BARRICADE	20	EA
652.312	TYPE III BARRICADES	6	EA
652.33	DRUM	100	EA
652.34	CONE	300	EA
652.35	CONSTRUCTION SIGNS	1000	SF
652.36	MAINTENANCE OF TRAFFIC CONTROL DEVICES	1000	CD
652.38	FLAGGERS	7500	HR
656.75	TEMPORARY SOIL EROSION AND WATER POLLUTION CONTROL	1	LS
658.20	ACRYLIC LAYTEX FINISH, GREEN	21	SY
659.10	MOBILIZATION	1	LS
660.21	ON THE JOB TRAINING	1000	HR
910.301	SPECIAL WORK_UTILITY CONDUIT (OTT AND TWC - APPROACHES ONLY)	1	LS
910.301	SPECIAL WORK_UTILITY CONDUIT (OTT AND TWC - BRIDGE ONLY)	1	LS
910.301	SPECIAL WORK - WATER	1	LS
910.301	SPECIAL WORK - SEWER	1	LS

T·Y·LIN INTERNATIONAL

STATE OF MAINE
DEPARTMENT OF TRANSPORTATION

WIN 16705.00

BRIDGE NO. 2660

BRIDGE PLANS

PROJ. MANAGER		BY	DATE
DESIGN-DETAILED	DSM	DSM	.
CHECKED-REVIEWED	NLB	NLB	.
DESIGN2-DETAILED2			
DESIGN3-DETAILED3			
REVISIONS 1			
REVISIONS 2			
REVISIONS 3			
REVISIONS 4			
FIELD CHANGES			

SIGNATURE

P.E. NUMBER

DATE

PENOBSCOT RIVER BRIDGE
PENOBSCOT RIVER
HOWLAND-ENFIELD PENOBSCOT COUNTY

ESTIMATED QUANTITIES

SHEET NUMBER
2
OF 127

Filename: ...\MSTA\XXX_Estimate_01.dgn Division: HIGHWAY Username: Date:12/18/2014

GENERAL CONSTRUCTION NOTES

1. The utilities involved in this contract are as follows: Emera Maine; OTT Communications; Polaris Cable Services; Time Warner Cable, Inc.; Town of Enfield Sewer; Town of Howland Sewer; Town of Howland Water.

2. All utility facilities shall be adjusted by the respective utilities unless otherwise noted.

3. Existing aerial utilities are not shown on the plans.

4. The location of existing underground utilities and drainage shown on plans and cross-sections is approximate and should be confirmed by the Contractor.

5. Where pavement under this contract joins an existing pavement, the existing pavement shall be saw cut along a smooth line to a neat, even, vertical joint, as directed by the Resident. Broken or raveled edges will not be permitted. All work necessary for the preparation of this joint will be considered incidental to the related contract items.

6. Clearing limits shall be 5' beyond and parallel to the construction slope lines or as shown on the plans unless otherwise authorized by the Resident.

7. The clearing and selective clearing lines shown on the plans are for estimating purposes only. The actual lines for clearing shall be established in the field by the contractor and approved by the Resident.

8. Stumps have been estimated to be removed under Item 201.24, Removing Stump. However, where directed by the Resident, Item 631.20 Stump Chipper Rental (Including Operator), may be used to remove stumps.

9. Where deemed necessary by the Resident, unsuitable excess material shall be removed from the edges of shoulders and placed in designated areas or disposed of. Payment will be made under the appropriate contract items.

10. Driveway fill side slopes shall be the same as the non-guardrail fill slopes unless otherwise noted on the plans.

11. All waste material not used on the project shall be disposed of off the project in waste areas approved by the Resident.

12. Required ditch protection shown on the plans or in the Construction Notes is for estimating purposes only. The actual type and location of ditch protection may be altered by the Resident.

13. If foundation material is required under culverts, it shall meet the requirements for granular borrow - underwater backfill and will be paid for as granular borrow.

14. Granular borrow used to backfill muck excavation or in low wet areas to 1' above water level or old ground shall meet requirements for granular borrow underwater backfill.

15. Existing inslopes steeper than 2:1 in proposed fill areas shall be benched as directed by the Resident.

16. Paved entrances shall be constructed with:

Residential:	Commercial:
- 2" hot mix asphalt	- 3" hot mix asphalt
- 12" aggregate subbase course gravel.	- 11" aggregate subbase course gravel.

17. All un-paved entrances shall be constructed with:
    - 14" Aggregate Subbase Course - Gravel

18. Do not excavate for Aggregate Subbase Course where existing material is suitable as determined by the Resident.

19. In areas where the Resident directs the Contractor not to excavate to the subgrade line shown on the plans, payment for removing existing pavement, grubbing, shaping, ditching, and compacting the existing subbase and layers of new subbase 6 inches or less thick will be made under appropriate equipment rental items.

20. All embankment material, except as otherwise shown, placed below Elevation 133.4, shall be granular borrow meeting the requirements of Subsection 703.19, Material for Underwater Backfill.

21. Existing culverts and catch basins to remain shall be cleaned as directed by the Resident. Payment will be made under Item 631.32, Culvert Cleaner (Including Operators).

22. No existing drainage shall be abandoned, removed or plugged without prior approval of the Resident. Drainage to be abandoned or plugged shall be prepared as follows:
    Metal pipes shall be filled with flowable fill or removed in its entirety
    All other pipes, if not removed, shall be plugged with brick and mortar at each end

23. Preparation of existing drainage as described will not be paid separately and will be considered incidental to 604 items.

24. Inlets and outlets of all culverts shall be riprapped in accordance with the current version of standard detail No. 802(05), unless otherwise noted on the plans or directed by the Resident.

25. The culvert sizes shown on the plans and cross sections are for smooth lined pipes. For comparable corrugated sizes see the drainage tabulation.

26. Concrete pipe ties shall be installed at the last joint of the inlet and outlet ends of all open ended RCP. Payment shall be made under Item 603.55, Concrete Pipe Ties.

27. Any necessary cutting of existing pipes to fit in areas of proposed catch basins will not be paid for separately and will be considered incidental to 604 items.

28. Guardrail end treatments shall be installed concurrently with the placement of each section of beam guardrail.

29. All existing guardrail to be removed shall become the property of the Contractor. Removal and disposal shall be considered incidental to the guardrail items.

30. Two Reflectorized Flexible Guardrail Markers (Item 606.353) will be installed at each leading guardrail end and one at each trailing guardrail end. A delineator post (item 606.356) will be installed at each underdrain outlet.

31. Connections for proposed guardrail to existing guardrail will be considered incidental to Item 606.23, Guardrail Type 3C - Single Rail.

32. Loam has been estimated for all disturbed slope areas. Actual placement of the loam shall be as noted on the plans or designated by the Resident.

33. Unless otherwise noted Seeding Method No. 2 shall be utilized on all lawns and non-guardrail foreslopes from the edge of shoulder to the ditch line or toe of fill. Seeding Method No. 3 shall be utilized on all 2:1 backslopes and on all guardrail fill slopes. In addition to the aforementioned described quantity, an additional 5 feet width shall be added to all Seeding Method No. 2 areas to provide for additional disturbed areas beyond the slope lines and the unavoidable extra areas seeded.

34. Loam shall be placed to a nominal depth of 4 inches in Method No. 1 lawn areas and 2 inches in all other areas unless otherwise noted or directed by the Resident.

35. Any base pavement not surfaced before winter will require temporary pavement markings of paint, both yellow centerline and white edge lines and will be considered part of Item 627.76, Temporary Pavement Marking Line, White or Yellow.

36. The Contractor will be responsible for maintaining all existing mailboxes to ensure that the mail will be deliverable. No separate payment will be made for this work; it shall be considered incidental to the contract.

37. Any damage to the slopes caused by the contractor's equipment, personnel, or operation shall be repaired to the satisfaction of the resident. All work, equipment, and materials required to make repairs shall be at the Contractor's expense.

38. Areas requiring fill on the project will come from suitable excavation from excavation areas.

39. Estimated quantities for required structural earth excavation, drainage and minor structures are informational only and represent the approximate minimum quantity required to install drainage structures. Additional excavation for the contractor's convenience or to comply with backsloping requirements will not be paid for directly but will be considered incidental to the related drainage items.

40. No separate payment for superintendent or foreman will be made for the supervision of equipment being paid for under the equipment rental items.

41. Stations referenced are approximate.

42. All work shall be done in accordance with the Maine Department of Transportation's Best Management Practices for Erosion Control & Sediment Control, February, 2008.

43. The Contractor shall final stripe the project.

44. Areas designated for the existing pavement to be removed and/or graded to drain shall have the proposed ground surface treated to match adjacent areas.

45. Grading to drain shall be paid for using the appropriate equipment rental items.

46. Coordinates shown throughout these plans are given as a convenience to the Contractor and are in no way intended to relieve the Contractor's responsibilities under Section 105, General Scope of Work.

47. For easements, construction limits, and right-of-way lines, refer to Right of Way Maps.

48. Place a 24 inch wide strip of Erosion Control Blanket (Item 613.319) on the side slopes along the top of the riprap and behind the wingwalls.

49. Riprap and stone ditch protection shall be placed on Class I, non-woven erosion control geotextile as shown in Standard Details 610(03). Plain riprap shall be placed to a minimum depth of 3'-0", unless otherwise noted.

50. Grubbing in fill areas has been shown on the cross sections and the quantities noted. These limits are approximate and have been used for estimating purposes only. Actual grubbing limits may vary based on field conditions as directed by the Resident. Estimated grubbing depths are 6 inches in field areas and 12 inches in wooded areas.

51. A 3' paved lip shall be placed at all gravel entrances unless otherwise noted in the plans or directed by the Resident.

52. Place 12 inches gravel and 2 inches hot mix asphalt around catch basins in grassed areas (3' outside of frame) and paint with acrylic latex color finish-green. Payment shall be under the applicable contract items.

53. The following shall be incidental to the 603 item(s):
    - Any cutting of existing culverts and or connectors necessary to install new culvert replacements or extensions
    - All pipe excavation including any cutting and removal of pavement and all ditching at pipe ends
    - Furnishing, placing, grading, and compacting of any new gravel and/or fill material including granular borrow used under pipes and for temporary detours to maintain traffic during pipe installation (excavation is also incidental).
    - Granular borrow under the pipe shall meet the requirements for underwater backfill
    - All work necessary to connect to existing pipes and drainage structures
    - Any necessary clearing of brush and non-pay trees at culvert ends
    - Plugging of existing pipes

54. "Undetermined Locations" shall be determined by the Resident.

55. All ditches not otherwise treated shall have Item 613.319 - Erosion Control Blanket.

56. Pavement markings shall conform to the standard details and latest edition of the manual on uniform traffic control devices. The abbreviations shown on the plans are as follow.
    DYCL - 4" Double Yellow Centerline
    SWEL - 4" Single White Edge Line
    SL - 12" White Stop Line

57. A Maine Department of Transportation (MaineDOT) Office of Safety and Compliance investigation specific with this project encountered data suggesting petroleum related contamination was present at several locations along the project. These locations included: roughly MaineDOT station 11+00 to roughly MaineDOT station 15+00 left of center; roughly MaineDOT station 28+50 to roughly MaineDOT station 30+00 right and left of center; and roughly MaineDOT station 31+25 to roughly MaineDOT station 32+00 left of center. Subsequent on-site work failed to unearth any issues within these areas. However, in light of the available environmental data, the contractor shall employ appropriate health and safety measures to protect its workers against hazards associated with working near petroleum-impacted soils. Furthermore, the Contractor shall remain alert for any additional evidence of contamination. If the Contractor encounters evidence of soil or groundwater contamination, the Contractor shall secure the excavation, stop work in the contaminated area, and immediately notify the Resident. The Resident shall contact the Hydrogeologist in MaineDOT's Office of Safety and Compliance at 207-624-3004 and the Maine Department of Environmental Protection at 800-482-0777. Work may only continue with authorization from the Resident.

58. Protective coating for concrete surfaces shall be applied to the following areas: All exposed surfaces of concrete curbs and sidewalks, Fascia down to drip notch, All exposed surfaces of concrete transition barriers, Top of abutment backwalls and to 1'-0" below the top of backwalls on the back side.

59. Place riprap on side slopes up to elevation 148.0 and to the top of slopes steeper than 2:1 within the extents shown in the General Plans.

60. Construct the riprap shelf at Abutment 1 at elevation 148.0 and at Abutment 2 at Elevation 158.0.

61. Approach slabs shall be installed in accordance with Standard Details 502(02).

62. Project information referred to herein may be accessed at the following MaineDOT web address: http://www.maine.gov/mdot/comprehensive-list-projects/project-information.php.

63. The existing bridge plans may be accessed at the MaineDOT web address. The plans are reproductions of the original drawings as prepared for the construction of the bridge. It is very unlikely that the plans will show any construction field changes or any alterations which may have been made to the bridge during its life span.

64. The hydrologic report of the bridge site may be accessed at the MaineDOT web address. The hydrologic report is based on MaineDOT's interpretation of the information obtained for the subject site. No assurance is given that the information or the conclusions of the report will be representative of actual conditions at the time of construction.

65. Erosion Control Mix may be subsituted in those areas normally receiving loam and seed as direct by the Resident. Placement shall be in accordance with standard specifications Section 619, Mulch. Payment will be made under Item 619.1401, Erosion Control Mix.

66. The Contractor is alerted that an existing buried force main sewer line crosses the river and is located between the existing and proposed bridge except where it passes below the existing bridge on the east side of the river channel. The Contractor will take precautions to not disturb and to protect the existing sewer line from construction activities. The Contractor shall be responsible for all damage or disruption of service to the sewer line resulting from construction activities. No separate payment will be made for protection of existing utilities. Protection measures will be incidental to related contract items. See the Utility Special Provision for additional information and requirements.

67. The project geotechnical reports are as listed below. These reports may be accessed at the MaineDOT web address: (1) Geotechnical Design Report, Penobscot River Bridge, MaineDOT WIN 16705.00, Howland/Enfield, Maine, October 30, 2013, Soils Report No. 2013-31C; (2) Geotechnical Data Report, Penobscot River Bridge, Routes 6 and 155 over Penobscot River, Howland-Enfield, Maine, MaineDOT Bridge Program, December 30, 2010, Soils Report 2010-37.

68. Geotechnical information furnished or referred to in this plan set is for the use of the Bidders and the Contractor. No assurance is given that the information or interpretations will be representative of actual subsurface conditions at the construction site. MaineDOT will not be responsible for the Bidders' or Contractor's interpretations of, or conclusions drawn from, the geotechnical information. The boring logs contained in the plan set present factual and interpretive subsurface information collected at discrete locations. Data provided may not be representative of the subsurface conditions between the boring locations.

69. Quantities included for pay items measured and paid for by Lump Sum are estimated quantities and are provided by MaineDOT for informational purposes only. Lump Sum pay items will be paid for at the Contract Bid amount, with no addition or reduction in payment to the Contractor if the actual final quantities are different from the MaineDOT provided estimated quantities, except as follows: a. If a Lump Sum pay item is eliminated, the requirements of Standard Specifications Section 109.2, Elimination of Items, will take precedence. b. If other Contract Documents specifically allow a change in payment for a Lump Sum pay item, those requirements will be followed. c. If a design change results in changes to estimated quantities for Lump Sum pay items, price adjustments will be made in accordance with Standard Specifications Section 109.7, Equitable Adjustments to Compensation.

70. All costs for cofferdams not associated with the construction of Pier No. 1, Pier No. 2, or Pier No. 3 including pumping, maintenance, related temporary soil erosion and water pollution controls and removal, will not be paid for directly, but will be considered incidental to related Contract items.

71. The Contractor shall submit a Bridge Demolition Plan to the Resident, at least 10 business days prior to the start of work on this item. This plan shall outline the methods and equipment to be used to remove and dispose of all materials included in the existing bridge. Part of this plan must include the use of a MaineDOT approved vendor (e.g., Environmental Projects, INC. or EnPro Environmental Services, Inc.) for the transport and management of any hazardous waste generated at the bridge site. No work related to the removal of the bridge shall be undertaken by the Contractor until MaineDOT has reviewed the Bridge Demolition Plan for appropriateness and completeness. Payment for all work necessary for developing, submitting and finalizing the Demolition Plan will not be made separately, but shall be included in the payment of Pay Item 202.19, Removing Existing Bridge, or other related pay items.

(Notes continued on Earthwork Summary Sheet)

T·Y·LIN INTERNATIONAL

STATE OF MAINE
DEPARTMENT OF TRANSPORTATION

BRIDGE PLANS

WIN 16705.00

BRIDGE NO. 2660

PROJ. MANAGER	N.B.	BY	DATE
DESIGN-DETAILED	RMH	SAM	.
CHECKED-REVIEWED	NLB	NLB	.
DESIGN2-DETAILED2			
DESIGN3-DETAILED3			
REVISIONS 1			
REVISIONS 2			
REVISIONS 3			
REVISIONS 4			
FIELD CHANGES			

SIGNATURE

P.E. NUMBER

DATE

PENOBSCOT RIVER BRIDGE
PENOBSCOT RIVER
HOWLAND-ENFIELD PENOBSCOT COUNTY

GENERAL NOTES

SHEET NUMBER
3
OF 127

Filename: ...\MSTA\XXX_General_Notes 1.dgn Division: Username: Date:12/16/2014

GENERAL CONSTRUCTION NOTES (CONTINUED)

72. The existing bridge shall be removed by, and become the property of, the Contractor. The steel portions of the existing bridge are coated with a lead-based paint system. The Contractor is responsible for the containment, proper management and disposal of all lead-contaminated hazardous waste generated by the process of demolishing the bridge. MaineDOT will assume generator responsibility for any hazardous waste generated as a result of the removal process at the bridge site; this waste shall be transported and managed by a MaineDOT approved vendor (e.g., Environmental Projects, Inc or EnPro Environmental Services, Inc). The Contractor is responsible for implementing appropriate OSHA mandated personal protection standards related to this process. Once the existing bridge is removed from the bridge site, the Contractor is solely responsible for the care, custody and control of the components of the existing bridge - any hazardous waste generated as a result of the storage, recycling or disposal of the bridge components, including the lead-coated steel shall be the responsibility of the Contractor. The Contractor shall recycle or reuse the steel in accordance with Maine Department of Environmental Regulation Chapter 850; a copy of which is available at MaineDOT's offices on Child Street in Augusta. Payment for all labor, materials, equipment and other costs required to remove and dispose of the existing bridge will not be made separately, but shall be considered incidental to Item 202.19, Removing Existing Bridge.

73. Existing bridge superstructure shall be removed in its entirety. Concrete and granite masonry piers shall be removed to an elevation flush with the existing river bed. Concrete and granite masonry abutments shall be removed down to the elevation of the existing bridge seat.

74. MaineDOT Bridge Maintenance will be maintaining the existing bridge, which is in poor condition and needing regular maintenance and inspection. The Contractor shall allow for mobilization of equipment and no additional compensation shall be paid to the Contractor for delay as a result of repairs or inspection completed by MaineDOT Bridge Maintenance.

75. The communication and cable service utility lines located on the existing bridge will be relocated to the proposed bridge by others. The Contractor will coordinate all bridge and approach construction with utility relocation work as required. See the Utility Special Provision for additional information and requirements.

76. Seeded gutters and other gutters lined with Stone Ditch Protection shall be constructed after paving and shoulder work is completed, where it is apparent that runoff will cause continual erosion. Payment will be made under the appropriate Contract items.

77. All dimensions shown in the plans are horizontal or vertical at 45° F, unless noted otherwise.

78. No provisions have been made for the contractor to perform work or set up staging outside the existing and proposed right-of-way.

79. The contractor shall be responsible for costs associated with coordination with the utility companies, if needed.

80. The contractor will be required to beneifcially use all dredge material on site per SP 203. If there is excess material on the project, excavation outside of the abutment limits will be disposed of in waste areas to allow for the dredge material to be beneficially used on site. All costs associated with grading, seeding and mulching of waste areas shall be considered incidental.

If there is excess material on the project, excavation outside of the abutment limits will be disposed of in waste areas to allow for the dredge material to be beneficially used on site. All costs associated with grading, seeding and mulching of waste areas shall be considered incidental.

COMMON EXCAVATION FOR ESTIMATE									
Common Excavation (from Cross Sections)						+	4416		
Earth From Drives						+	353		
Grubbing in Fill						+	236		
Pavement Removal - old road						+	250		
Pavement Removal - in Fill						+	468		
Total Common Excavation						=		**5723**	**CY**
FILL FOR BORROW CALCULATIONS									
Common Fill (from cross sections)						+	5404		
Common Fill (Abutment fill slopes)						+	1225		
Fill For Drives						+	57		
Grubbing in Fill						+	236		
Pavement Removal - in Fill						+	468		
Total Fill						=		**7390**	**CY**
ROCK EXCAVATION FOR ESTIMATE									
Rock Excavation (from cross sections)						+	0		
Total Rock Excavation						=		**0**	**CY**
AVAILABLE COMMON EXCAVATION FOR BORROW CALCULATIONS									
(1) Total Common Excavation								**5723**	**CY**
Deductions:									
Pavement Removal - old road							250		
Pavement Removal - in Fill							468		
Grubbing in Fill							236		
(2) Total Deductions								**954**	**CY**
Total Available Common Excavation (1) minus (2)								**4769**	**CY**
Total Available Struct. Earth Excavation (Abutments & Piers)								**3405**	**CY**
Total Available Struct. Earth Excavation (Underdrain Only)								**300**	
Total Available Non-Rock Excavation								**8474**	**CY**
COMPUTATION OF WASTE STORAGE AND WASTE MATERIAL									
Total Available Waste Storage Area (from Cross Sections)								**0**	**CY**
Pavement Removal - in Fill						+	468		
Pavement Removal - old road							250		
Grubbing in Fill						+	236		
Total Waste Material to be Utilized = Smaller of Total Available Waste Storage Area or Total Waste Material								**0**	CY
Total Waste Material to be Wasted = Total Waste Material Minus Total Waste Material To Be Utilized								**954**	**CY**
COMPUTATION OF GRANULAR BORROW FOR ESTIMATE									
Granular Borrow (Undetermined Location)								**50**	CY
Granular Borrow (Abutments)								**3375**	CY
Granular Borrow (Piers)								**325**	CY
Granular Borrow x 1.00								**3750**	**CY**
COMPUTATION OF COMMON BORROW FOR ESTIMATE									
(3) Total Fill								**7390**	**CY**
Total Available Non-Rock Excav.	8474	x	0.85	=	7202				
Total Available Rock Excav.	0	x	1.33	=	0				
Total Available Str. Rock Excav.	0	x	1.33	=	0				
Total Waste Material to be Utilize	0	x	1	=	0				
(4) Total Available Excavation								**7202**	**CY**
Borrow Needed = Total Fill Minus Total Available Excavation								**188**	**CY**

T·Y·LIN INTERNATIONAL

STATE OF MAINE
DEPARTMENT OF TRANSPORTATION

BRIDGE PLANS

WIN 16705.00

BRIDGE NO. 2660

PROJ. MANAGER	NLB	BY	DATE
DESIGN-DETAILED			.
CHECKED-REVIEWED			.
DESIGN2-DETAILED2			
DESIGN3-DETAILED3			
REVISIONS 1			
REVISIONS 2			
REVISIONS 3			
REVISIONS 4			
FIELD CHANGES			

SIGNATURE

P.E. NUMBER

DATE

PENOBSCOT RIVER BRIDGE
PENOBSCOT RIVER
HOWLAND-ENFIELD PENOBSCOT COUNTY

EARTHWORK SUMMARY
AND GENERAL NOTES

SHEET NUMBER
4
OF 127

Date:12/16/2014 Username: Division: Filename: ...\MSTA\Earthworks_Summary.dgn

STATION	CULVERT PIPE											CATCH BASIN					PIPE ARCH				MH	UNDERDRAIN						ELBOWS, TEES, WYES AND INLET GRATE UNITS	REMARKS
	RCP			CMP		OPTION I		OPTION III														TYPE B		TYPE C					
								SMOOTHLINED		CORRUGATED										GAGE OR WALL THICKNESS		TYPE B	OUTLET	SMOOTHLINED		CORRUGATED		DESCRIPTIONS	
	SIZE	LENGTH	CLASS	SIZE	LENGTH	SIZE	LENGTH	SIZE	LENGTH	SIZE	LENGTH	F4	F5-C	B1	B1-C	OTHER	SPAN	RISE	LENGTH			LENGTH	LENGTH	SIZE	LENGTH	SIZE	LENGTH		
STA. 14+50.00, 28.15' LT TO STA. 15+81.00, 14.88' LT																						115.0'	20.0'						OUTLET TO DITCH
STA. 15+85.00, 14.88' LT													1																
STA. 15+85.00, 15.88' LT TO STA. 15+96.74, 36.14' LT	12"	24'	III																										INSTALL CONCRETE PIPE TIES
STA. 15+87.00, 14.88' LT TO STA. 16+50.00, 14.88' LT																						63.5'							
STA. 26+40.00, 13.88' LT															1														
STA. 26+40.00, 15.88' LT TO STA. 26+40.00, 44.00' LT	12"	28'	III																										INSTALL CONCRETE PIPE TIES
STA. 26+42.00, 13.88' LT TO STA. 27+05.00, 13.88' LT																						63'							
STA. 27+83.81, 17.71' RT TO STA. 80+48.10, 25.60' LT								24"	45'	24"	45'																		
STA. 27+85.00, 16.10' RT															1														60" CATCH BASIN
STA. 27+86.83, 15.26' RT TO STA. 29+38.00, 14.88' RT																								12"	148.5'	12"	148.5'		
STA. 28+05.96, 28.99' LT TO STA. 27+85.86, 14.29' RT								24"	48'	24"	48'																		
STA. 28+07.22, 30.94' LT															1														
STA. 90+75.00, 44.90' RT TO STA. 28+07.22, 32.76' LT								24"	26.7'	24'	26.7'																		
STA. 28+08.73, 30.38' LT TO STA. 32+08.00, 21.12' LT																						402'							DN STREAM END AT NON-STANDARD TRENCH OFFEST
STA. 29+40.00, 14.88' RT															1														
STA. 29+42.00, 14.88' RT TO STA. 32+08.00, 17.88' RT																						266'							
STA. 60+48.19, 34.21' LT TO STA. 61+07.75, 26.67' RT								18"	88'	18"	88'																		
STA. 61+27.82, 25.59' LT TO 62+07.12, 14.98' LT						15"	80'																						DRIVE CULVERT
STA. 71+75.74, 43.35' RT TO STA. 71+94.61, 34.35' LT	18"	80'	III																										INSTALL CONCRETE PIPE TIES
STA. 72+54.4, 17.4' RT																Exist. CB													ADJUST TO GRADE
STA. 73+75.2, 18.3' RT																Exist. CB													ADJUST TO GRADE
STA. 80+05.50, 36.29' LT TO STA. 80+48.00, 17.88' LT																						48'							PROVIDE 0.50% MIN. SLOPE
STA. 80+50.00, 25.00' LT														1															
STA. 80+50.00, 19.50' LT TO STA. 80+50.00, 23.00' LT								24"	3.5'	24"	3.5'																		
STA. 80+50.00, 17.88' LT															1.125														
STA. 80+50.00, 15.88' LT TO STA. 80+56.69, 55.81' RT	24"	72'	III																										INSTALL CONCRETE PIPE TIES
STA. 80+52.00, 25.00' LT TO STA. 80+84.00, 25.00' LT								15"	32'	15"	32'																		
STA. 80+52.00, 17.88' LT TO STA. 80+90.00, 17.88' LT																						38'							PROVIDE 0.50% MIN. SLOPE
STA. 80+85.00,25.00' LT												1																	
STA. 90+48.00, 44.00' RT TO STA. 90+65.26, 25.05' RT																						25.8'							PROVIDE 0.50% MIN. SLOPE
STA. 90+67.50, 23.73' RT															1														
STA. 90+67.64, 25.51' RT TO STA. 90+76.18, 42.80' RT								12"	19.3'	12"	19.3'																		
STA. 90+69.50, 23.73' RT TO STA. 90+98.00, 18.02' RT																						30.3'							PROVIDE 0.50% MIN. SLOPE
STA. 90+77.06, 44.59' RT														1.125															60" CATCH BASIN
STA. 91+00.8, 17.9' RT																Exist. CB													ADJUST TO GRADE

T·Y·LIN INTERNATIONAL

STATE OF MAINE
DEPARTMENT OF TRANSPORTATION

BRIDGE PLANS

WIN 16705.00

BRIDGE NO. 2660

SIGNATURE
P.E. NUMBER
DATE

	BY	DATE
PROJ. MANAGER	NLB	
DESIGN-DETAILED		
CHECKED-REVIEWED		
DESIGN2-DETAILED2		
DESIGN3-DETAILED3		
REVISIONS 1		
REVISIONS 2		
REVISIONS 3		
REVISIONS 4		
FIELD CHANGES		

PENOBSCOT RIVER BRIDGE
PENOBSCOT RIVER
HOWLAND-ENFIELD PENOBSCOT COUNTY

DRAINAGE SUMMARY

SHEET NUMBER
5
OF 127

Filename: ...\MSTA\Drainage_Summary.dgn Division: Username: Date:12/16/2014

ROUTE 155/6
CURVE DATA #1
PI = 12+04.06
D = 1°29'59.6"
Δ = 7°47'18.6" Rt.
R = 3820.00'
L = 519.27'
T = 260.04'
E = 8.84'

TERRIO STREET
CURVE DATA
PI = 60+59.85
D = 57°17'44.8"
Δ = 28°47'19.1" Rt.
R = 100.00'
L = 50.25'
T = 25.67'
E = 3.24'

PATH
CURVE DATA #1
PI = 0+69.86
D =763°56'37.4"
Δ = 88°26'51.1" Lt.
R = 7.50'
L = 11.58'
T = 7.30'
E = 2.97'

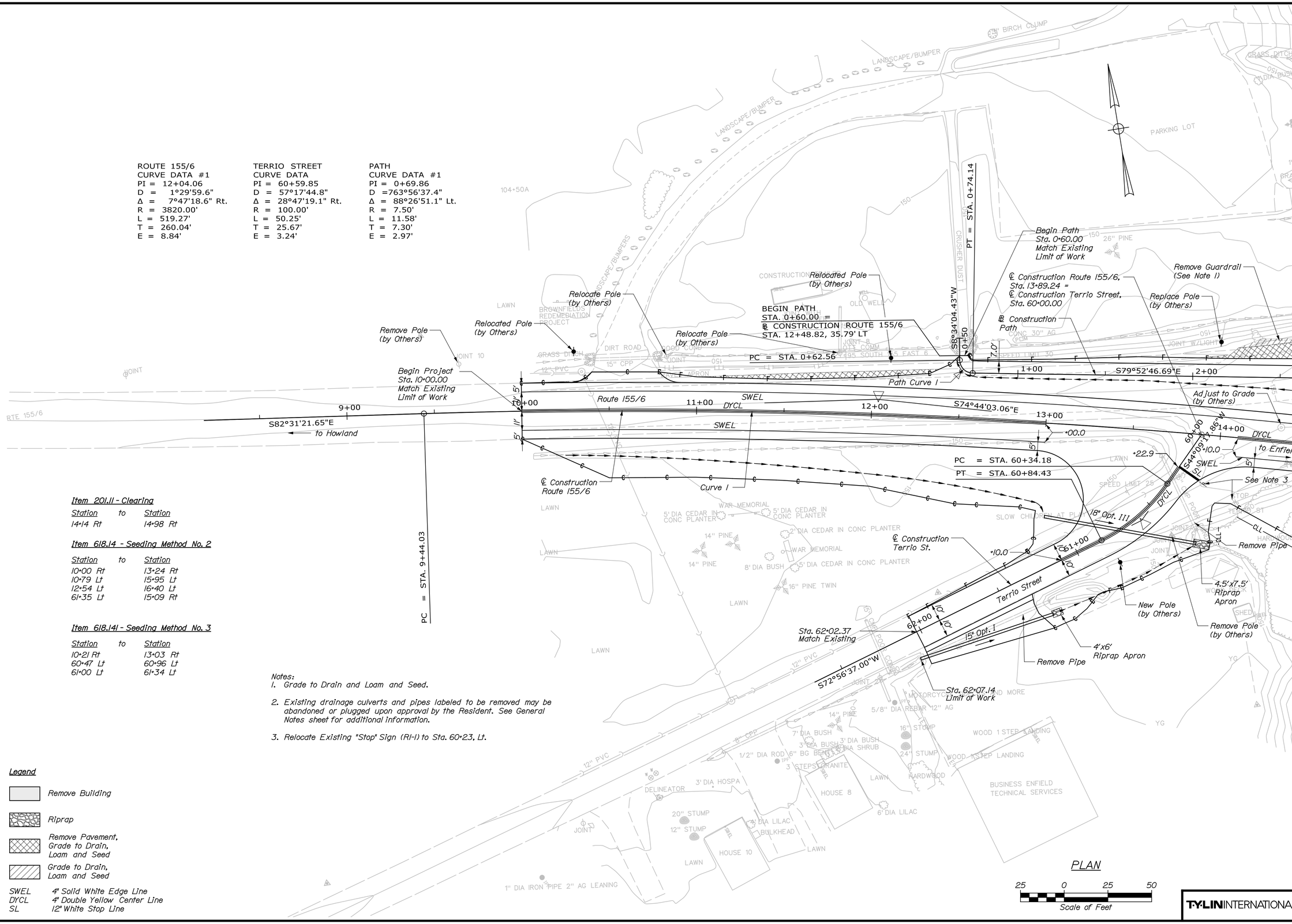

Item 201.11 - Clearing

Station	to	Station
14+14 Rt		14+98 Rt

Item 618.14 - Seeding Method No. 2

Station	to	Station
10+00 Rt		13+24 Rt
10+79 Lt		15+95 Lt
12+54 Lt		16+40 Lt
61+35 Lt		15+09 Rt

Item 618.141 - Seeding Method No. 3

Station	to	Station
10+21 Rt		13+03 Rt
60+47 Lt		60+96 Lt
61+00 Lt		61+34 Lt

Notes:

1. Grade to Drain and Loam and Seed.
2. Existing drainage culverts and pipes labeled to be removed may be abandoned or plugged upon approval by the Resident. See General Notes sheet for additional information.
3. Relocate Existing "Stop" Sign (R1-1) to Sta. 60+23, Lt.

Legend

- Remove Building
- Riprap
- Remove Pavement, Grade to Drain, Loam and Seed
- Grade to Drain, Loam and Seed

SWEL 4" Solid White Edge Line
DYCL 4" Double Yellow Center Line
SL 12" White Stop Line

T·Y·LIN INTERNATIONAL

STATE OF MAINE
DEPARTMENT OF TRANSPORTATION

WIN 16705.00
BRIDGE NO. 2660
BRIDGE PLANS

		SIGNATURE	
		P.E. NUMBER	
		DATE	
DATE	.	.	
BY			
N.B.			
PROJ. MANAGER			
DESIGN-DETAILED			
CHECKED-REVIEWED			
DESIGN2-DETAILED2			
DESIGN3-DETAILED3			
REVISIONS 1			
REVISIONS 2			
REVISIONS 3			
REVISIONS 4			
FIELD CHANGES			

PENOBSCOT RIVER BRIDGE
PENOBSCOT RIVER
HOWLAND-ENFIELD PENOBSCOT COUNTY

PLAN
1 OF 4

SHEET NUMBER
6
OF 127

Date:12/16/2014 Username: Division: Filename: ...\HIGHWAY\MSTA\HDplan_001.DGN

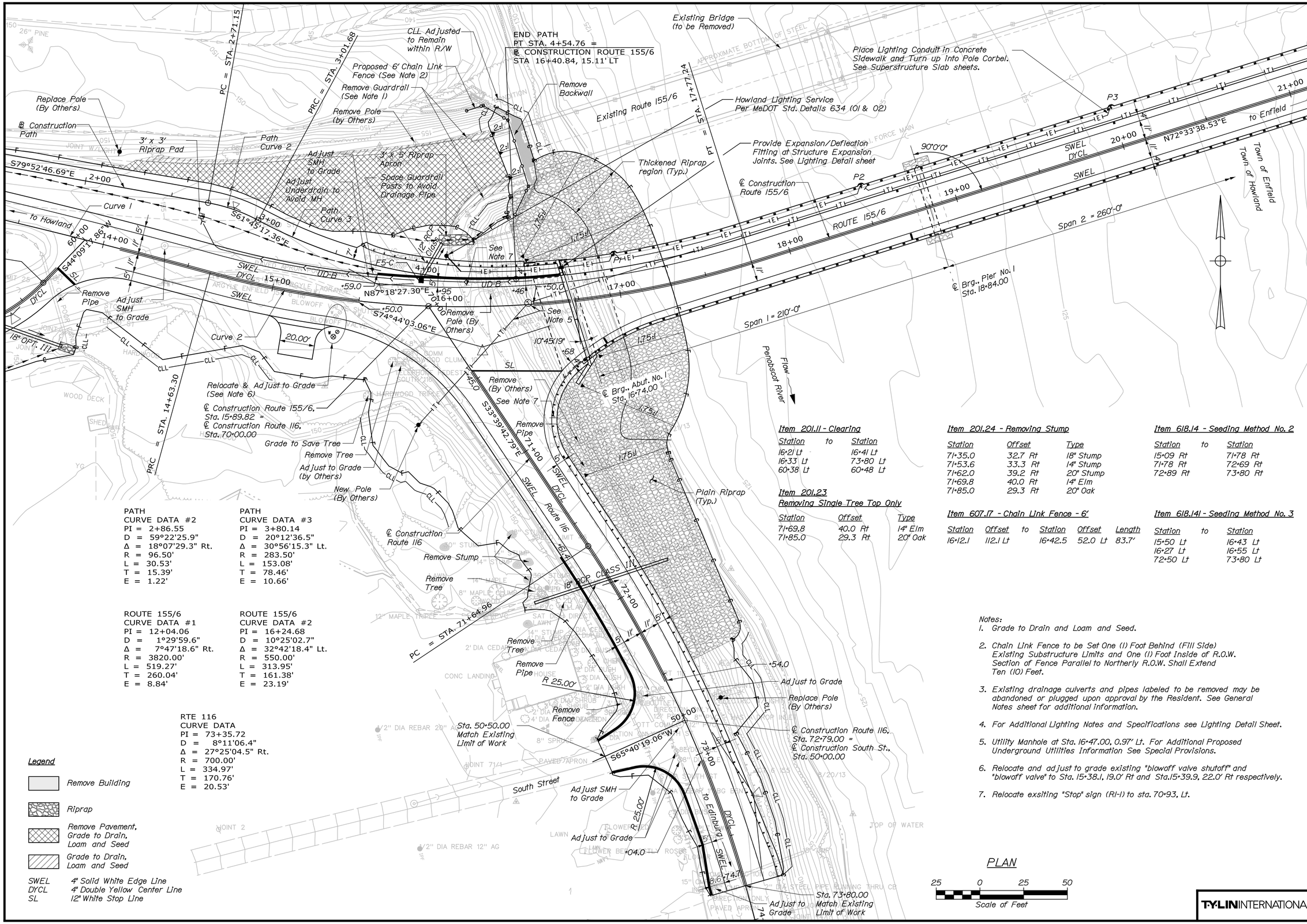

PATH
CURVE DATA #2
PI = 2+86.55
D = 59°22'25.9"
Δ = 18°07'29.3" Rt.
R = 96.50'
L = 30.53'
T = 15.39'
E = 1.22'

PATH
CURVE DATA #3
PI = 3+80.14
D = 20°12'36.5"
Δ = 30°56'15.3" Lt.
R = 283.50'
L = 153.08'
T = 78.46'
E = 10.66'

ROUTE 155/6
CURVE DATA #1
PI = 12+04.06
D = 1°29'59.6"
Δ = 7°47'18.6" Rt.
R = 3820.00'
L = 519.27'
T = 260.04'
E = 8.84'

ROUTE 155/6
CURVE DATA #2
PI = 16+24.68
D = 10°25'02.7"
Δ = 32°42'18.4" Lt.
R = 550.00'
L = 313.95'
T = 161.38'
E = 23.19'

RTE 116
CURVE DATA
PI = 73+35.72
D = 8°11'06.4"
Δ = 27°25'04.5" Rt.
R = 700.00'
L = 334.97'
T = 170.76'
E = 20.53'

Legend

- Remove Building
- Riprap
- Remove Pavement, Grade to Drain, Loam and Seed
- Grade to Drain, Loam and Seed

SWEL 4" Solid White Edge Line
DYCL 4" Double Yellow Center Line
SL 12" White Stop Line

Item 201.11 - Clearing

Station	to	Station
16+21 Lt		16+41 Lt
16+33 Lt		73+80 Lt
60+38 Lt		60+48 Lt

Item 201.24 - Removing Stump

Station	Offset	Type
71+35.0	32.7 Rt	18" Stump
71+53.6	33.3 Rt	14" Stump
71+62.0	39.2 Rt	20" Stump
71+69.8	40.0 Rt	14" Elm
71+85.0	29.3 Rt	20" Oak

Item 618.14 - Seeding Method No. 2

Station	to	Station
15+09 Rt		71+78 Rt
71+78 Rt		72+69 Rt
72+89 Rt		73+80 Rt

Item 201.23
Removing Single Tree Top Only

Station	Offset	Type
71+69.8	40.0 Rt	14" Elm
71+85.0	29.3 Rt	20" Oak

Item 607.17 - Chain Link Fence - 6'

Station	Offset	to	Station	Offset	Length
16+12.1	112.1 Lt		16+42.5	52.0 Lt	83.7'

Item 618.141 - Seeding Method No. 3

Station	to	Station
15+50 Lt		16+43 Lt
16+27 Lt		16+55 Lt
72+50 Lt		73+80 Lt

Notes:

1. Grade to Drain and Loam and Seed.
2. Chain Link Fence to be Set One (1) Foot Behind (Fill Side) Existing Substructure Limits and One (1) Foot Inside of R.O.W. Section of Fence Parallel to Northerly R.O.W. Shall Extend Ten (10) Feet.
3. Existing drainage culverts and pipes labeled to be removed may be abandoned or plugged upon approval by the Resident. See General Notes sheet for additional information.
4. For Additional Lighting Notes and Specifications see Lighting Detail Sheet.
5. Utility Manhole at Sta. 16+47.00, 0.97' Lt. For Additional Proposed Underground Utilities Information See Special Provisions.
6. Relocate and adjust to grade existing "blowoff valve shutoff" and "blowoff valve" to Sta. 15+38.1, 19.0' Rt and Sta.15+39.9, 22.0' Rt respectively.
7. Relocate exsiting "Stop" sign (R1-1) to sta. 70+93, Lt.

PLAN

25 0 25 50
Scale of Feet

T·Y·LIN INTERNATIONAL

STATE OF MAINE
DEPARTMENT OF TRANSPORTATION

BRIDGE PLANS

WIN 16705.00

BRIDGE NO. 2660

PROJ. MANAGER			
DESIGN-DETAILED			
CHECKED-REVIEWED			
DESIGN2-DETAILED2			
DESIGN3-DETAILED3			
REVISIONS 1			
REVISIONS 2			
REVISIONS 3			
REVISIONS 4			
FIELD CHANGES			

N.B. BY DATE

SIGNATURE

P.E. NUMBER

DATE

PENOBSCOT RIVER BRIDGE
PENOBSCOT RIVER
HOWLAND-ENFIELD PENOBSCOT COUNTY

PLAN
2 OF 4

SHEET NUMBER
7
OF 127

Date:12/16/2014 Username: Division: Filename: ...\HIGHWAY\MSTA\HDplan_002.dgn

Filename: ...\HIGHWAY\MSTA\HDplan_003.dgn Division: Username: Date:12/16/2014

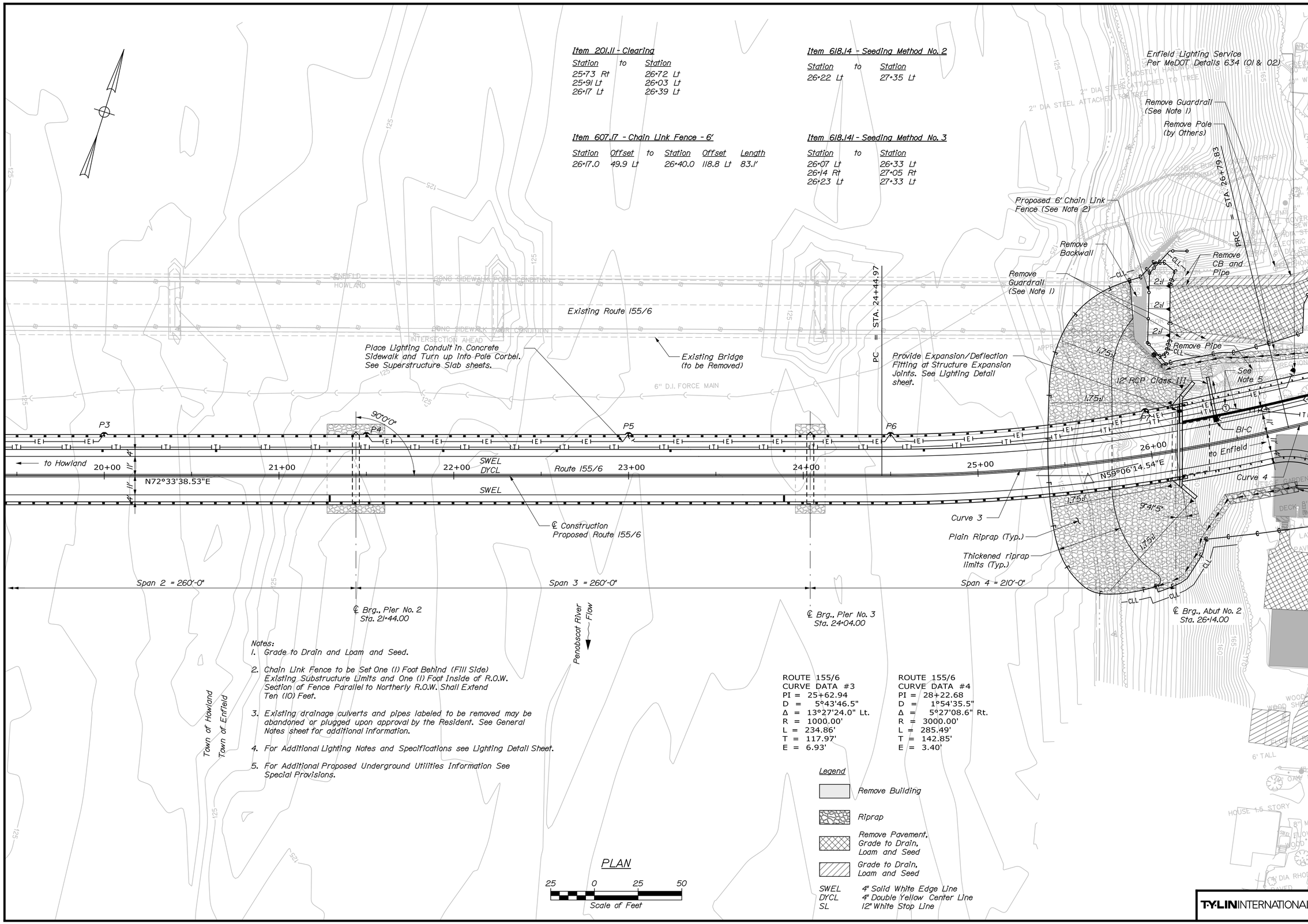

STATE OF MAINE
DEPARTMENT OF TRANSPORTATION

BRIDGE PLANS

WIN 16705.00

BRIDGE NO. 2660

PROJ. MANAGER		
DESIGN-DETAILED		
CHECKED-REVIEWED		
DESIGN2-DETAILED2		
DESIGN3-DETAILED3		
REVISIONS 1		
REVISIONS 2		
REVISIONS 3		
REVISIONS 4		
FIELD CHANGES		

N.B.	BY	DATE

SIGNATURE
P.E. NUMBER
DATE

PENOBSCOT RIVER BRIDGE
PENOBSCOT RIVER
HOWLAND-ENFIELD PENOBSCOT COUNTY

PLAN
3 OF 4

SHEET NUMBER
8
OF 127

Filename: ...\HIGHWAY\MSTA\HDplan_004.dgn Division: Username: Date:12/16/2014

Item 201.11 - Clearing

Station	to	Station
80+60 Lt		80+85 Lt

Item 201.23
Removing Single Tree Top Only

Station	Offset	Type
26+95.7	16.5 Lt	12" Maple Clump 5

Item 202.08
Removing Building No. 1

Station	Description
80+45 Rt	1½ Story House

Item 202.08
Removing Building No. 2

Station	Description
81+42 Rt	Garage 2 Car

Item 608.26
Curb Ramp Detectable Warning Field

Station	Offset
27+05	20.3 Lt

Item 618.14 - Seeding Method No. 2

Station	to	Station
27+48 Rt		28+93 Rt
27+91 Lt		28+56 Lt
28+95 Rt		30+00 Rt
28+98 Lt		29+41 Lt
29+82 Lt		30+79 Lt
31+11 Lt		31+65 Lt
80+48 Lt		80+90 Lt
80+81 Rt		82+06 Rt

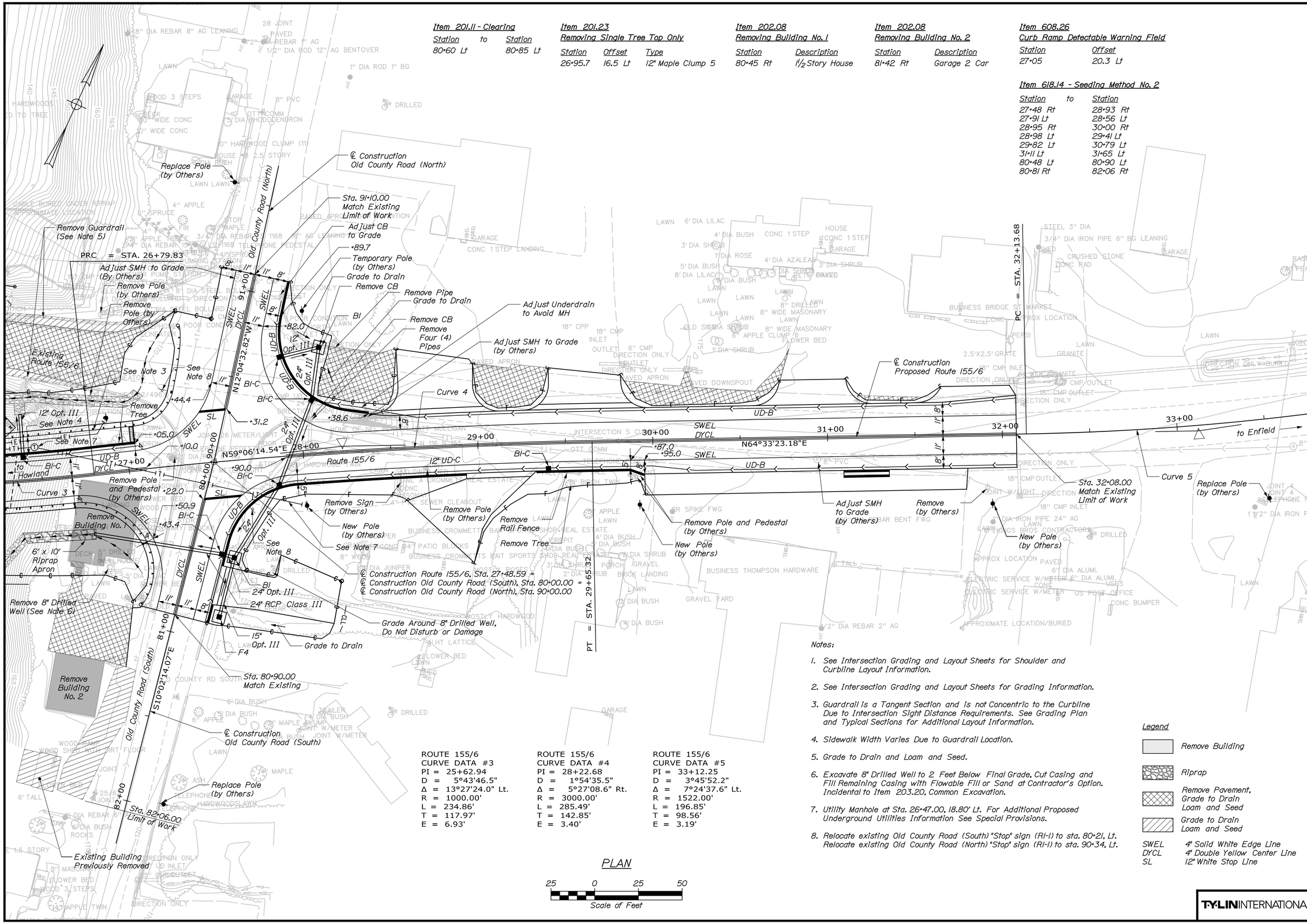

ROUTE 155/6
CURVE DATA #3
PI = 25+62.94
D = 5°43'46.5"
Δ = 13°27'24.0" Lt.
R = 1000.00'
L = 234.86'
T = 117.97'
E = 6.93'

ROUTE 155/6
CURVE DATA #4
PI = 28+22.68
D = 1°54'35.5"
Δ = 5°27'08.6" Rt.
R = 3000.00'
L = 285.49'
T = 142.85'
E = 3.40'

ROUTE 155/6
CURVE DATA #5
PI = 33+12.25
D = 3°45'52.2"
Δ = 7°24'37.6" Lt.
R = 1522.00'
L = 196.85'
T = 98.56'
E = 3.19'

PLAN

25 0 25 50
Scale of Feet

Notes:

1. See Intersection Grading and Layout Sheets for Shoulder and Curbline Layout Information.
2. See Intersection Grading and Layout Sheets for Grading Information.
3. Guardrail is a Tangent Section and is not Concentric to the Curbline Due to Intersection Sight Distance Requirements. See Grading Plan and Typical Sections for Additional Layout Information.
4. Sidewalk Width Varies Due to Guardrail Location.
5. Grade to Drain and Loam and Seed.
6. Excavate 8" Drilled Well to 2 Feet Below Final Grade, Cut Casing and Fill Remaining Casing with Flowable Fill or Sand at Contractor's Option. Incidental to Item 203.20, Common Excavation.
7. Utility Manhole at Sta. 26+47.00, 18.80' Lt. For Additional Proposed Underground Utilities Information See Special Provisions.
8. Relocate existing Old County Road (South) "Stop" sign (RI-1) to sta. 80+21, Lt. Relocate existing Old County Road (North) "Stop" sign (RI-1) to sta. 90+34, Lt.

Legend

- Remove Building
- Riprap
- Remove Pavement, Grade to Drain Loam and Seed
- Grade to Drain Loam and Seed

SWEL 4" Solid White Edge Line
DYCL 4" Double Yellow Center Line
SL 12" White Stop Line

T·Y·LIN INTERNATIONAL

STATE OF MAINE
DEPARTMENT OF TRANSPORTATION

BRIDGE PLANS

WIN 16705.00

BRIDGE NO. 2660

	BY	DATE
N.B.		
PROJ. MANAGER		
DESIGN-DETAILED		
CHECKED-REVIEWED		
DESIGN2-DETAILED2		
DESIGN3-DETAILED3		
REVISIONS 1		
REVISIONS 2		
REVISIONS 3		
REVISIONS 4		
FIELD CHANGES		

SIGNATURE
P.E. NUMBER
DATE

PENOBSCOT RIVER BRIDGE
PENOBSCOT RIVER
HOWLAND-ENFIELD PENOBSCOT COUNTY

PLAN
4 OF 4

SHEET NUMBER
9
OF 127

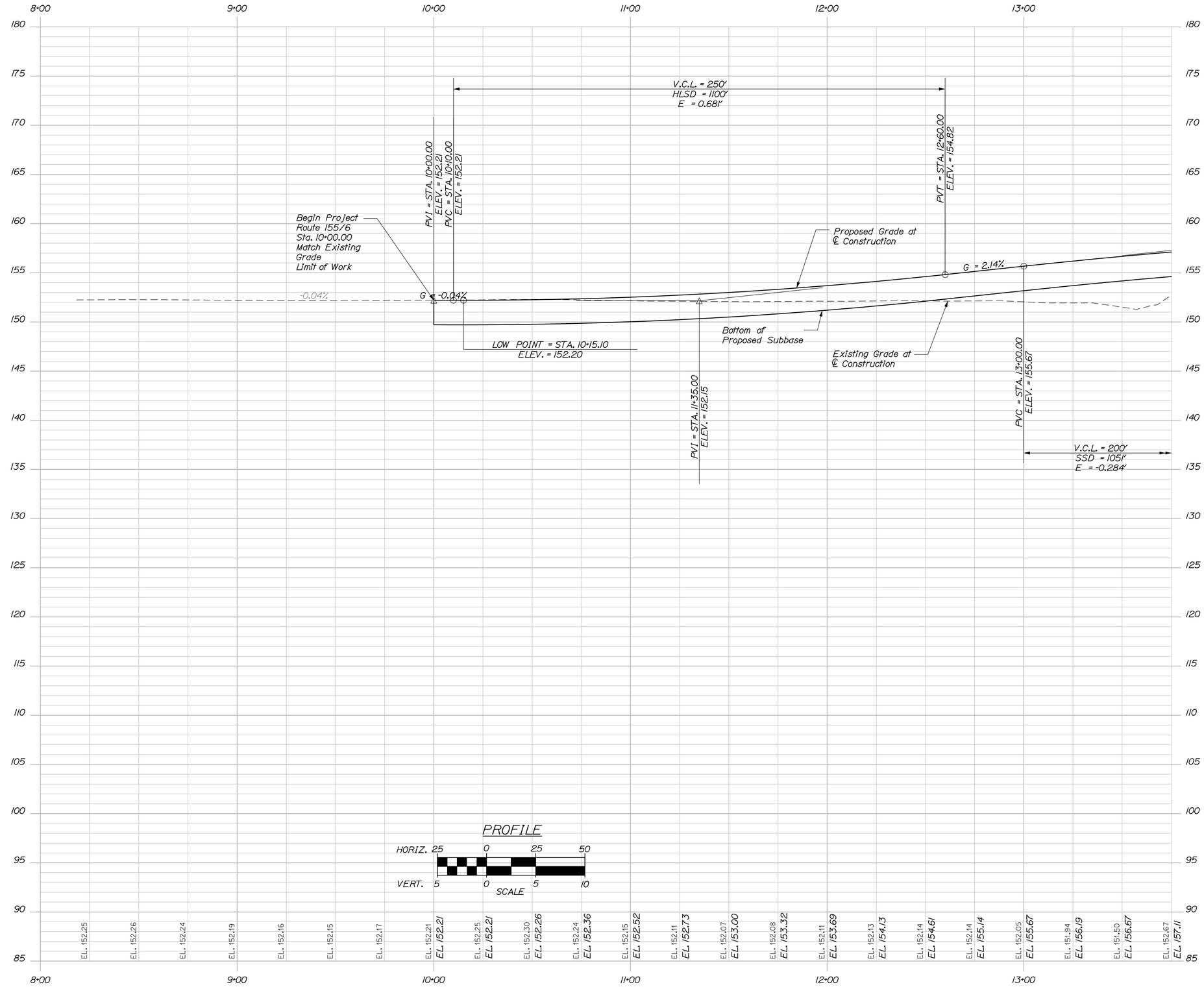

T·Y·LIN INTERNATIONAL

STATE OF MAINE
DEPARTMENT OF TRANSPORTATION

BRIDGE PLANS

WIN 16705.00

BRIDGE NO. 2860

	NLB	BY	DATE
PROJ. MANAGER			
DESIGN-DETAILED			
CHECKED-REVIEWED			
DESIGN2-DETAILED2			
DESIGN3-DETAILED3			
REVISIONS 1			
REVISIONS 2			
REVISIONS 3			
REVISIONS 4			
FIELD CHANGES			

SIGNATURE

P.E. NUMBER

DATE

PENOBSCOT RIVER BRIDGE
PENOBSCOT RIVER
HOWLAND-ENFIELD PENOBSCOT COUNTY

PROFILE 1 OF 4
ROUTE 155/6

SHEET NUMBER
10
OF 127

Filename: ...\HIGHWAY\MSTA\HDprofile_001.DGN Division: Username: Date:12/16/2014

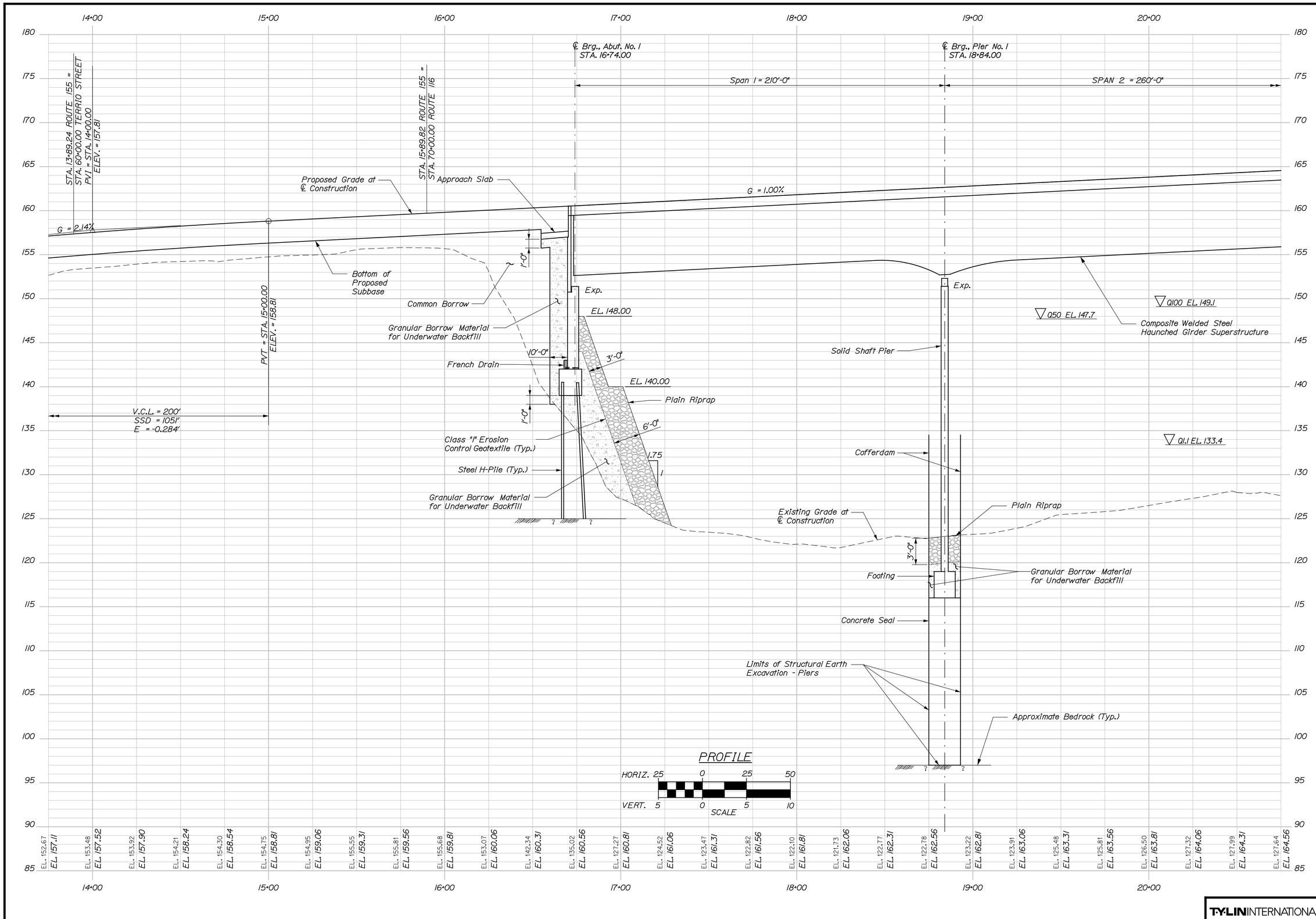

T·Y·LIN INTERNATIONAL

STATE OF MAINE
DEPARTMENT OF TRANSPORTATION

BRIDGE PLANS

WIN
16705.00

BRIDGE NO. 2860

	NLB	BY	DATE
PROJ. MANAGER			
DESIGN-DETAILED			
CHECKED-REVIEWED			
DESIGN2-DETAILED2			
DESIGN3-DETAILED3			
REVISIONS 1			
REVISIONS 2			
REVISIONS 3			
REVISIONS 4			
FIELD CHANGES			

SIGNATURE

P.E. NUMBER

DATE

PENOBSCOT RIVER BRIDGE
PENOBSCOT RIVER
HOWLAND-ENFIELD PENOBSCOT COUNTY

PROFILE 2 OF 4
ROUTE 155/6

SHEET NUMBER
11
OF 127

Date:12/16/2014 Username: Division: Filename: ...\HIGHWAY\MSTA\HDprofile_002.dgn

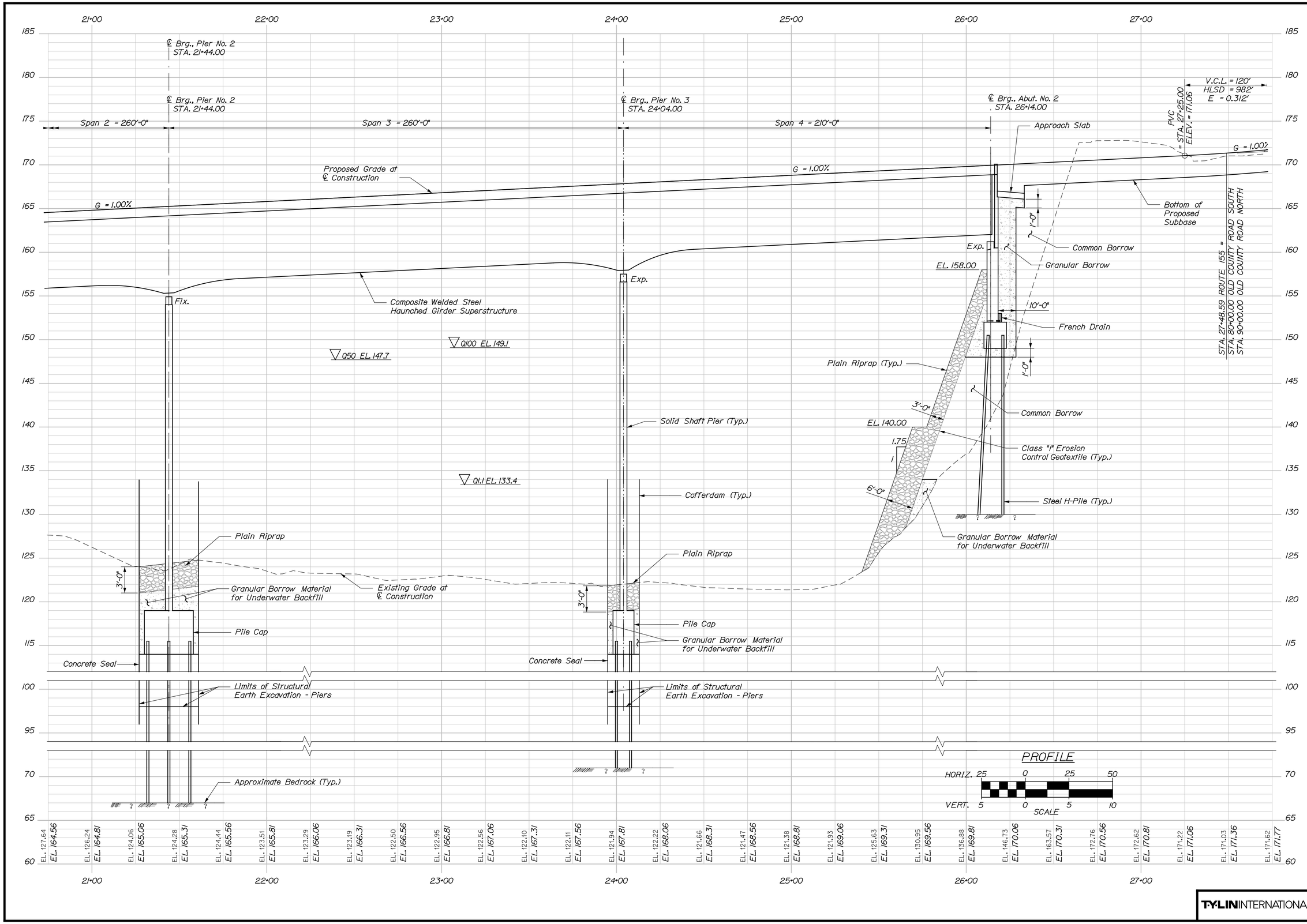

T·Y·LIN INTERNATIONAL

STATE OF MAINE
DEPARTMENT OF TRANSPORTATION

BRIDGE PLANS

WIN 16705.00

BRIDGE NO. 2660

PROJ. MANAGER	NLB	BY	DATE
DESIGN-DETAILED			
CHECKED-REVIEWED			
DESIGN2-DETAILED2			
DESIGN3-DETAILED3			
REVISIONS 1			
REVISIONS 2			
REVISIONS 3			
REVISIONS 4			
FIELD CHANGES			

SIGNATURE

P.E. NUMBER

DATE

PENOBSCOT RIVER BRIDGE
PENOBSCOT RIVER
HOWLAND-ENFIELD PENOBSCOT COUNTY

PROFILE 3 OF 4
ROUTE 155/6

SHEET NUMBER
12
OF 127

Filename: ...\HIGHWAY\MSTA\HDprofile_003.dgn Division: Username: Date:12/16/2014

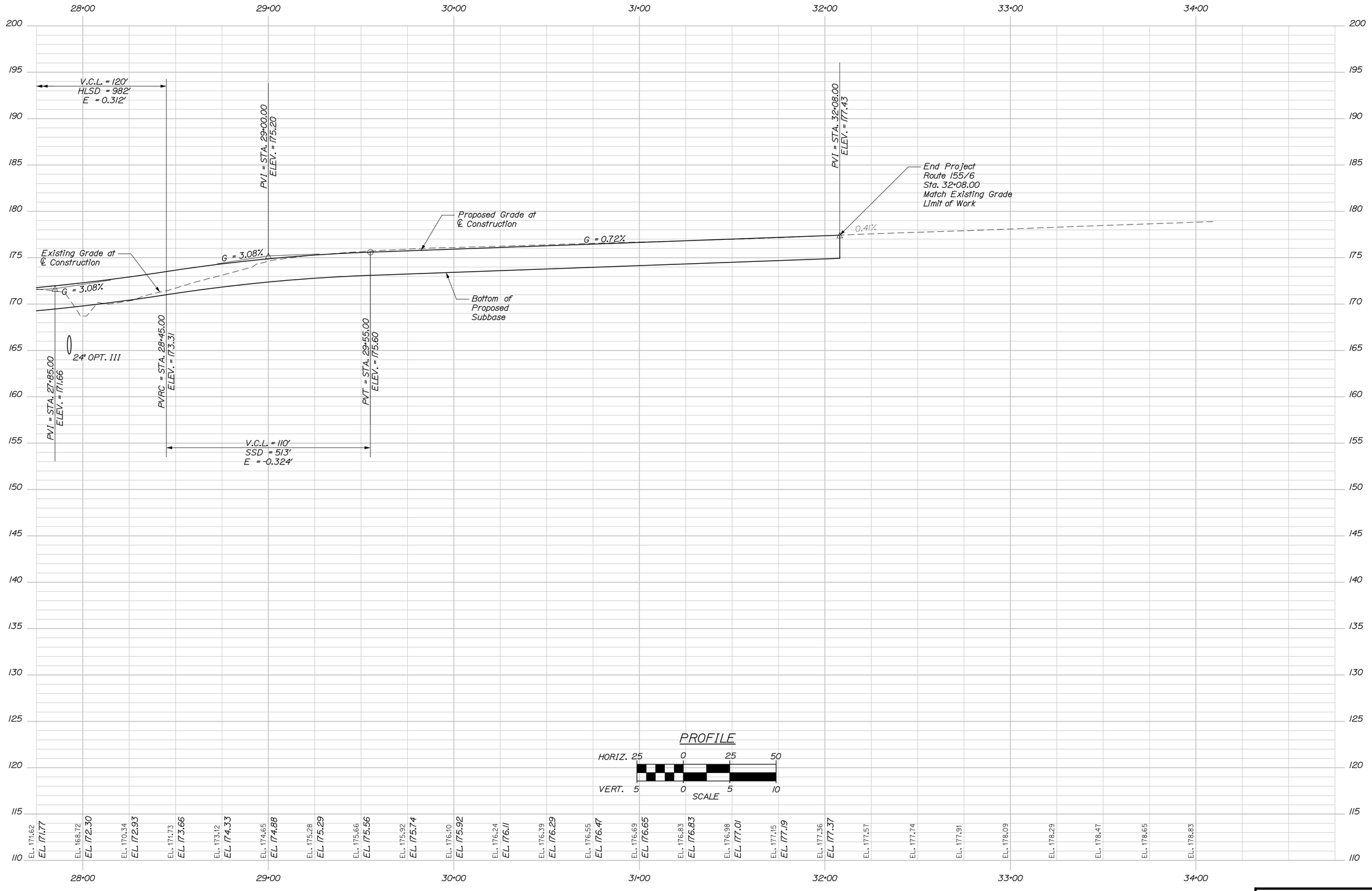

T·Y·LIN INTERNATIONAL

STATE OF MAINE
DEPARTMENT OF TRANSPORTATION

BRIDGE PLANS

WIN
16705.00

BRIDGE NO. 2860

PROJ. MANAGER	NLB	BY	DATE
DESIGN-DETAILED			
CHECKED-REVIEWED			
DESIGN2-DETAILED2			
DESIGN3-DETAILED3			
REVISIONS 1			
REVISIONS 2			
REVISIONS 3			
REVISIONS 4			
FIELD CHANGES			

SIGNATURE

P.E. NUMBER

DATE

PENOBSCOT RIVER BRIDGE
PENOBSCOT RIVER
HOWLAND-ENFIELD PENOBSCOT COUNTY

PROFILE 4 OF 4
ROUTE 155/6

SHEET NUMBER
13
OF 127

Filename: ...\HIGHWAY\MSTA\HDprofile_004.dgn Division: Username: Date:12/16/2014

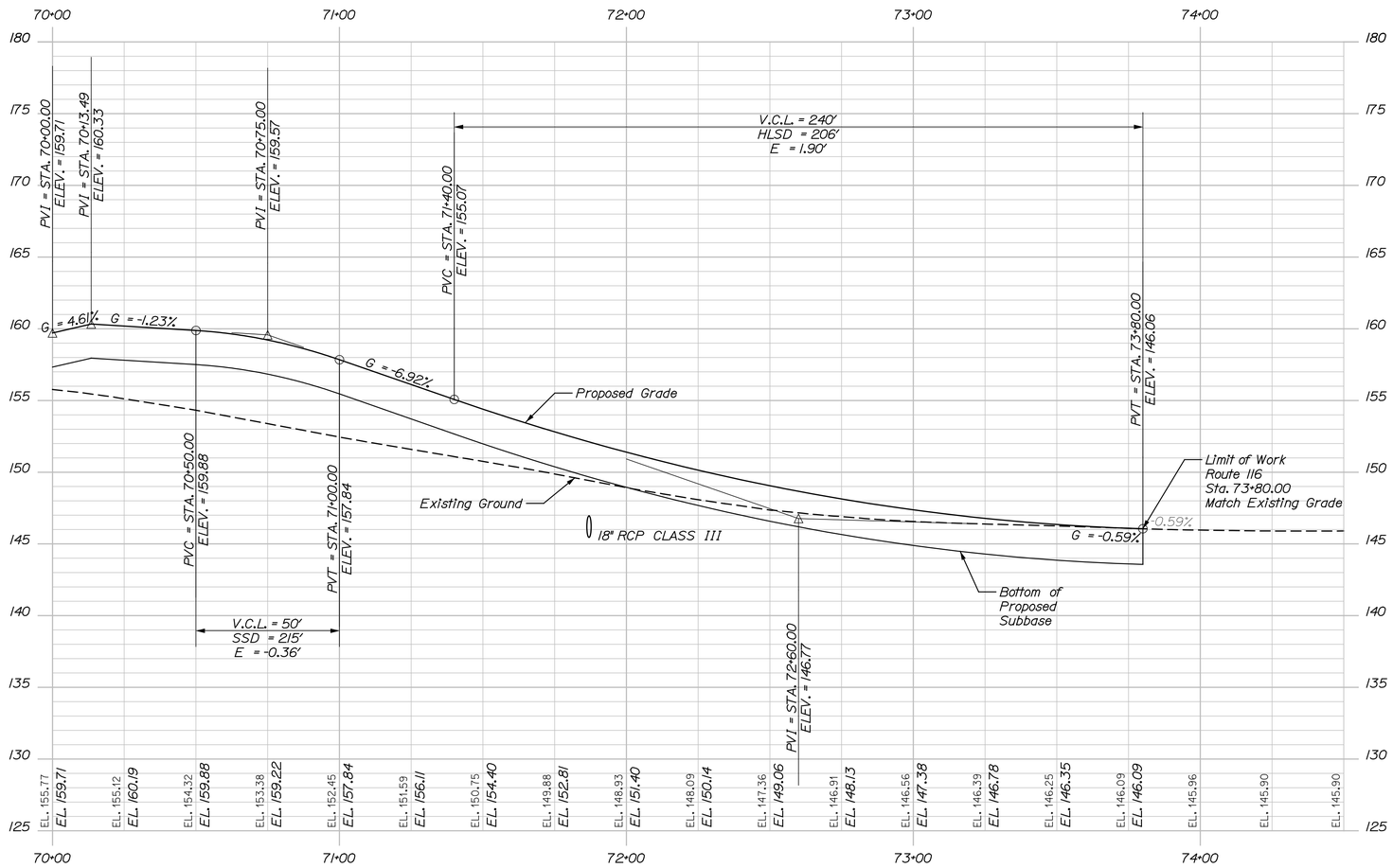

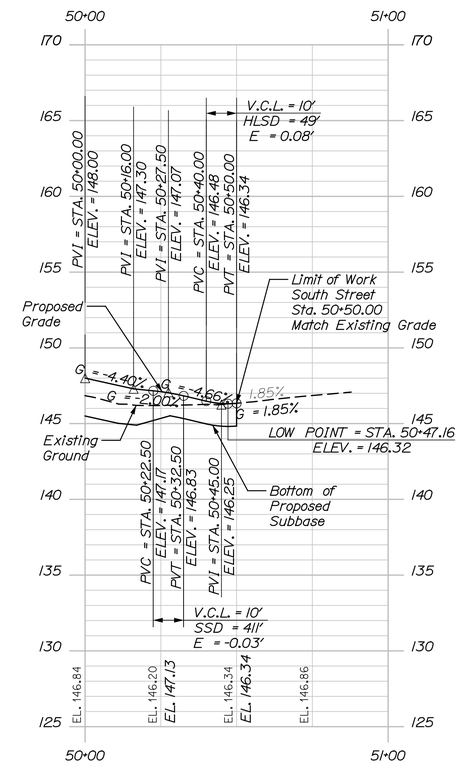

PROFILE

HORIZ. 25 0 25 50

VERT. 5 0 5 10

SCALE

T·Y·LIN INTERNATIONAL

STATE OF MAINE
DEPARTMENT OF TRANSPORTATION

BRIDGE PLANS

WIN 16705.00

BRIDGE NO. 2660

PROJ. MANAGER	N.B.	BY	DATE
DESIGN-DETAILED			
CHECKED-REVIEWED			
DESIGN2-DETAILED2			
DESIGN3-DETAILED3			
REVISIONS 1			
REVISIONS 2			
REVISIONS 3			
REVISIONS 4			
FIELD CHANGES			

SIGNATURE

P.E. NUMBER

DATE

PENOBSCOT RIVER BRIDGE
PENOBSCOT RIVER
HOWLAND-ENFIELD PENOBSCOT COUNTY

PROFILE
ROUTE 116 AND SOUTH STREET

SHEET NUMBER

14

OF 127

Filename: ...\HIGHWAY\MSTA\HDprofile_005.dgn Division: Username: Date:12/16/2014

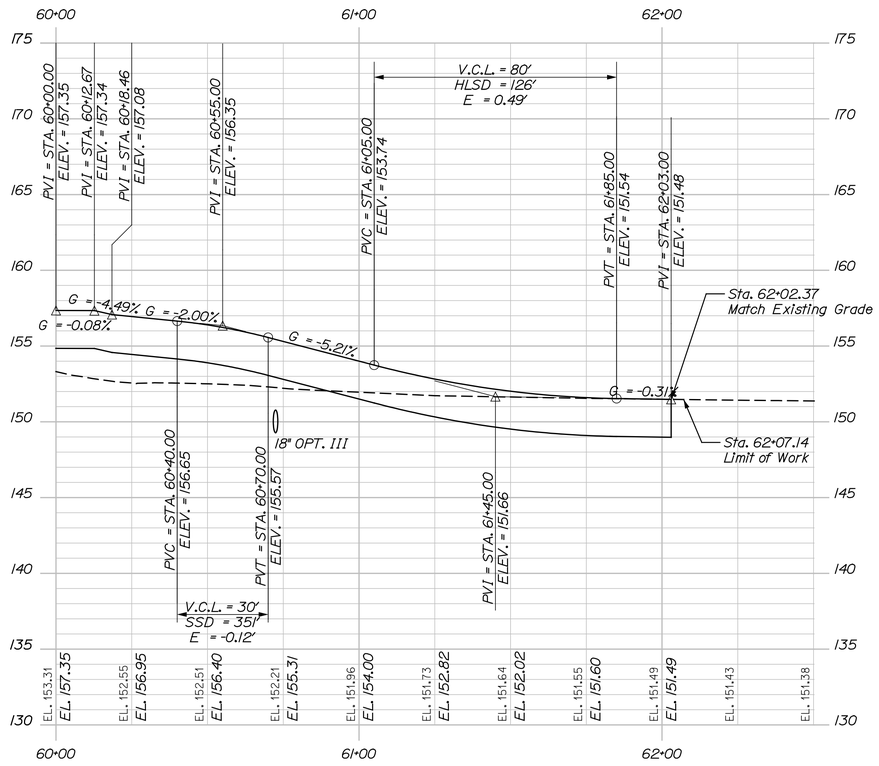

TERRIO STREET

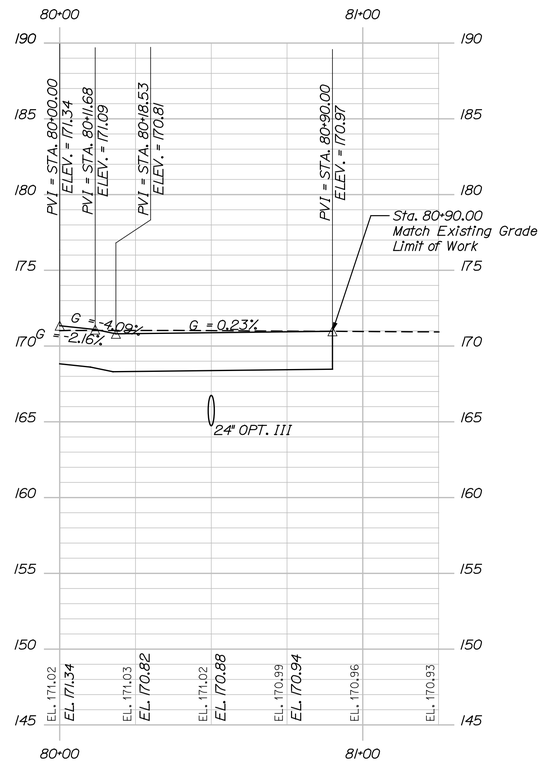

OLD COUNTY ROAD (SOUTH)

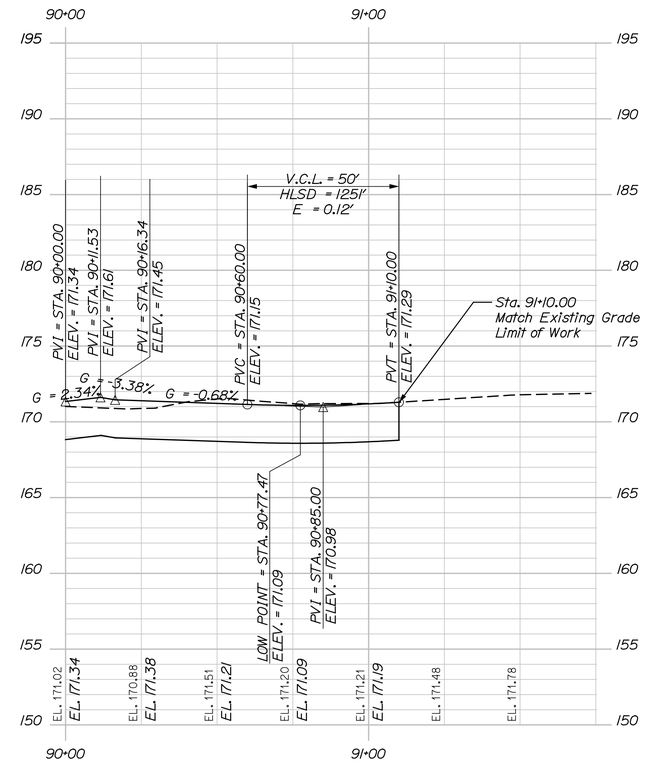

OLD COUNTY ROAD (NORTH)

PROFILE

HORIZ. 25 0 25 50

VERT. 5 0 5 10

SCALE

T·Y·LIN INTERNATIONAL

STATE OF MAINE
DEPARTMENT OF TRANSPORTATION

WIN 16705.00

BRIDGE NO. 2660

BRIDGE PLANS

PROJ. MANAGER	N.B.	BY	DATE
DESIGN-DETAILED			
CHECKED-REVIEWED			
DESIGN2-DETAILED2			
DESIGN3-DETAILED3			
REVISIONS 1			
REVISIONS 2			
REVISIONS 3			
REVISIONS 4			
FIELD CHANGES			

SIGNATURE

P.E. NUMBER

DATE

PENOBSCOT RIVER BRIDGE
PENOBSCOT RIVER
HOWLAND-ENFIELD PENOBSCOT COUNTY

PROFILE
TERRIO ST. AND OLD COUNTY ROAD

SHEET NUMBER

15

OF 127

Date:12/16/2014 Username: Filename: ...\HIGHWAY\MSTA\HDprofile_006.dgn Division:

WEST APPROACH DESIGN SECTION

DENSE GRADED CRUSHED AGGREGATE SUBBASE		
5' SHOULDER 44.44 CY/100 LF	11 FT. TRAVEL LANES 162.96 CY/100 LF	5' SHOULDER 84.44 CY/100 LF
STATION TO STATION	STATION TO STATION	STATION TO STATION
10+00 TO 12+50, LT	10+00 TO 13+89	10+00 TO 13+00, RT

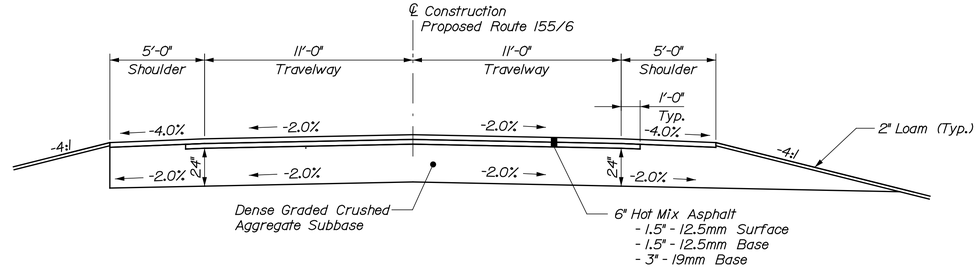

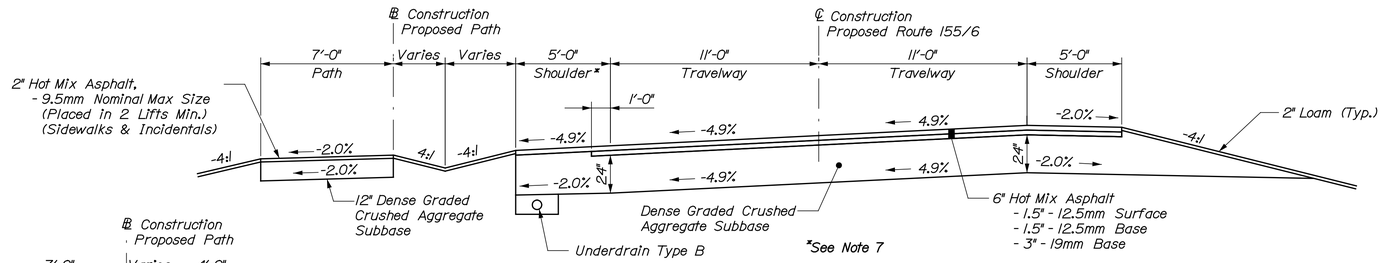

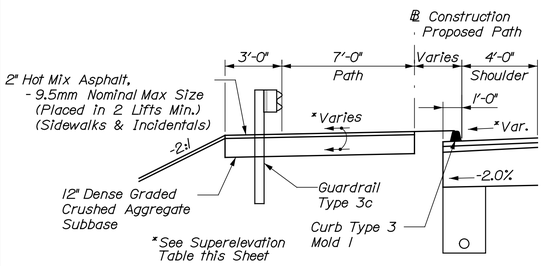

WEST APPROACH SIDEWALK DESIGN SECTION

DENSE GRADED CRUSHED AGGREGATE SUBBASE			
7' PATH 29.62 CY/100 LF	5' LOW-SIDE SHOULDER 40.37 CY/100 LF	11 FT. TRAVEL LANES 162.96 CY/100 LF	5' HIGH-SIDE SHOULDER 85.56 CY/100 LF
STATION TO STATION	STATION TO STATION	STATION TO STATION	STATION TO STATION
0+60 TO 3+60, LT	12+50 TO 16+68, LT	13+89 TO 16+74	14+21 TO 15+32, RT

PATH W/ GUARDRAIL LEFT

DENSE GRADED CRUSHED AGGREGATE SUBBASE
7' PATH W/ GUARDRAIL VARIES
STATION TO STATION
3+60 TO 16+46, LT

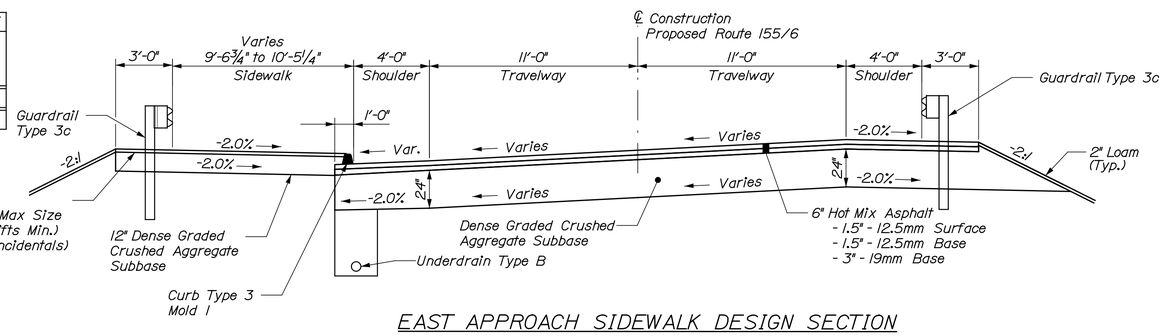

EAST APPROACH SIDEWALK DESIGN SECTION

DENSE GRADED CRUSHED AGGREGATE SUBBASE			
SIDEWALK W/ GUARDRAIL VARIES	4' LOW-SIDE SHOULDER 35.56 CY/100 LF	11 FT. TRAVEL LANES 162.96 CY/100 LF	4' HIGH-SIDE GUARDRAIL SHLDR 79.63 CY/100 LF
STATION TO STATION	STATION TO STATION	STATION TO STATION	STATION TO STATION
26+20 TO 27+05, LT	26+20 TO 27+05, LT	26+14 TO 27+50	26+16 TO 27+05, RT

EAST APPROACH DESIGN SECTION

DENSE GRADED CRUSHED AGGREGATE SUBBASE		
8' SHOULDER 57.04 CY/100 LF	11 FT. TRAVEL LANES 162.96 CY/100 LF	4' SHOULDER 42.96 CY/100 LF
STATION TO STATION	STATION TO STATION	STATION TO STATION
28+38 TO 32+08, LT	27+50 TO 32+08	27+96 TO 32+08, RT

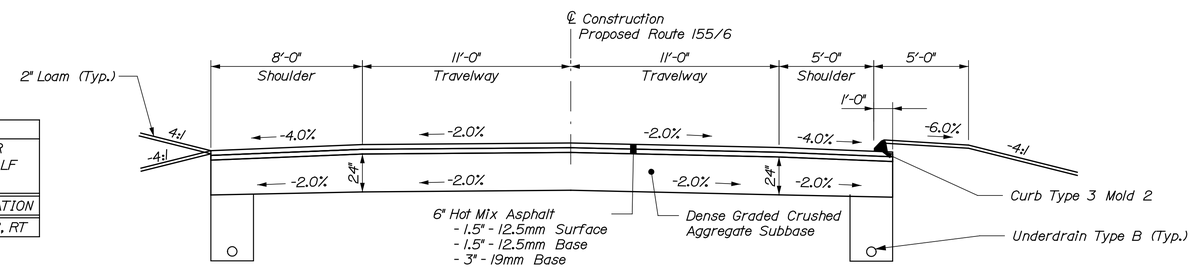

SUPERELEVATION TABLE
ROUTE 155/6

Lt. Shoulder	Lt. Travelway	Station	Rt. Travelway	Rt. Shoulder
-3.75%	-2.11%	10+00	-2.50%	-2.79%
-4.00%	-2.00%	10+50	-2.00%	-4.00%
-4.00%	-2.00%	11+00	-2.00%	-4.00%
		to		
-4.00%	-2.00%	13+00	-2.00%	-4.00%
-4.00%	-2.00%	13+50	-0.28%	-4.00%
-4.00%	-2.00%	14+00	1.45%	-4.00%
-4.00%	-2.00%	14+15.9	2.00%	-4.00%
-4.00%	-3.18%	14+50	3.18%	-4.00%
-4.90%	-4.90%	15+00	4.90%	-2.00%
		to		
-4.90%	-4.90%	17+50	4.90%	-2.00%
-4.30%	-4.30%	18+00	4.30%	-2.00%
-3.70%	-3.70%	18+50	3.70%	-2.00%
-3.10%	-3.10%	19+00	3.10%	-2.00%
-2.50%	-2.50%	19+50	2.50%	-2.00%
		to		
-2.50%	-2.50%	23+00	2.50%	-2.00%
-2.80%	-2.80%	23+50	2.80%	-2.00%
-3.10%	-3.10%	24+00	3.10%	-2.00%
-3.40%	-3.40%	24+50	3.40%	-2.00%
-3.70%	-3.70%	25+00	3.70%	-2.00%
-3.70%	-3.70%	25+50	3.70%	-2.00%
-3.70%	-3.70%	26+00	3.70%	-2.00%
-3.15%	-3.15%	26+14.38	3.15%	-2.00%
-2.86%	-2.86%	26+22.07	2.86%	-2.88%
-4.00%	-1.80%	26+50	1.80%	-4.00%
-4.00%	-0.85%	26+75	0.85%	-4.00%
-4.00%	0.10%	27+00	-0.10%	-4.00%
-4.00%	2.00%	27+50	-2.00%	-4.00%
-4.00%	2.00%	28+00	-2.00%	-4.00%
		to		
-4.00%	2.00%	29+50	-2.00%	-4.00%
-4.00%	0.60%	30+00	-2.00%	-4.00%
-4.00%	-0.80%	30+50	-1.00%	-4.00%
-4.00%	-2.20%	31+00	0.00%	-4.00%
-4.00%	-3.60%	31+50	1.00%	-4.00%
-5.28%	-5.00%	32+00	2.00%	-2.97%
-5.5%	-5.0%	32+08	1.8%	-2.8%

SUPERELEVATION TABLE
PATH

Travelway	Station
Match Exist.	0+60
-2.00%	0+75
	to
-2.00%	4+25
1.00%	4+50
1.00%	4+54.76

Notes:

1. The pavement base and subbase depths as shown on the plans are intended to be nominal.
2. Crowns for both normal and superelevation sections for all courses of subbase and pavement shall be straight.
3. When super elevation exceeds the slope of the low side shoulder, the shoulder pavement will have the same slope as traveled way.
4. The gravel quantity calculation is based on a 2" loam depth. The actual depth may vary.
5. The algebraic difference between shoulder and travel lane cross slopes "rollover" shall not exceed 8%.
6. The stationing shown under each typical is approximate.
7. All shoulders on this project will have full depth HMA (6") except for the following areas which will have 3" HMA depth:

   Sta. 10+00 to Sta. 15+00, Lt
   Sta. 10+00 to Sta. 13+00, Rt

TYLIN INTERNATIONAL

STATE OF MAINE
DEPARTMENT OF TRANSPORTATION

BRIDGE PLANS

WIN 16705.00

BRIDGE NO. 2660

PROJ. MANAGER	NLB	BY	DATE
DESIGN-DETAILED			
CHECKED-REVIEWED			
DESIGN2-DETAILED2			
DESIGN3-DETAILED3			
REVISIONS 1			
REVISIONS 2			
REVISIONS 3			
REVISIONS 4			
FIELD CHANGES			

SIGNATURE

P.E. NUMBER

DATE

PENOBSCOT RIVER BRIDGE
PENOBSCOT RIVER
HOWLAND-ENFIELD PENOBSCOT COUNTY

TYPICAL SECTIONS 1

SHEET NUMBER
16
OF 127

Date:12/16/2014
Username:
Division:
Filename: ...\HIGHWAY\MSTA\Typical_001.dgn

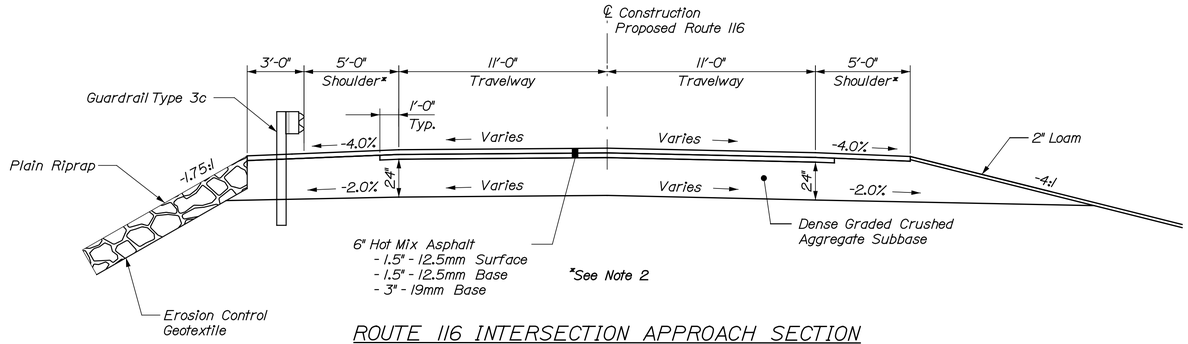

ROUTE 116 INTERSECTION APPROACH SECTION

DENSE GRADED CRUSHED AGGREGATE SUBBASE		
5' SHOULDER 58.15 CY/100 LF	11 FT. TRAVEL LANES 162.96 CY/100 LF	5' SHOULDER 76.48 CY/100 LF
STATION TO STATION	STATION TO STATION	STATION TO STATION
71+15 TO 71+61, LT	70+18 TO 71+61	70+18 TO 71+61, RT

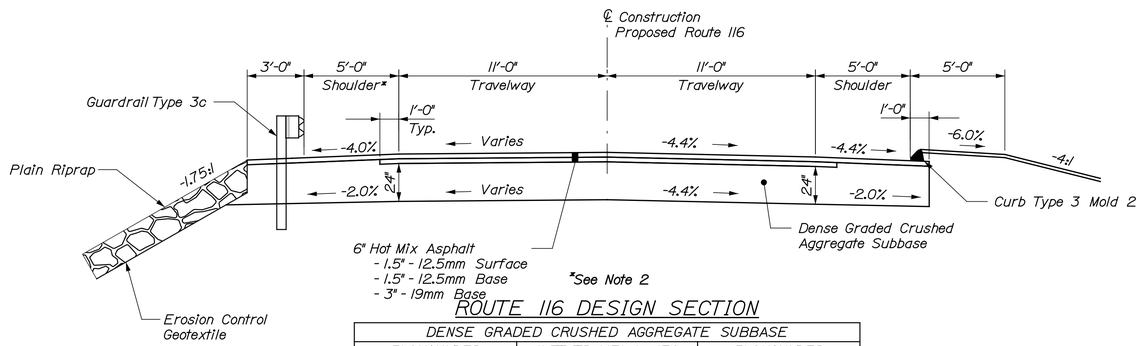

ROUTE 116 DESIGN SECTION

DENSE GRADED CRUSHED AGGREGATE SUBBASE		
5' SHOULDER 58.15 CY/100 LF	11 FT. TRAVEL LANES 162.96 CY/100 LF	5' SHOULDER 47.96 CY/100 LF
STATION TO STATION	STATION TO STATION	STATION TO STATION
70+61 TO 72+50, LT	71+61 TO 72+50	71+61 TO 73+50, RT

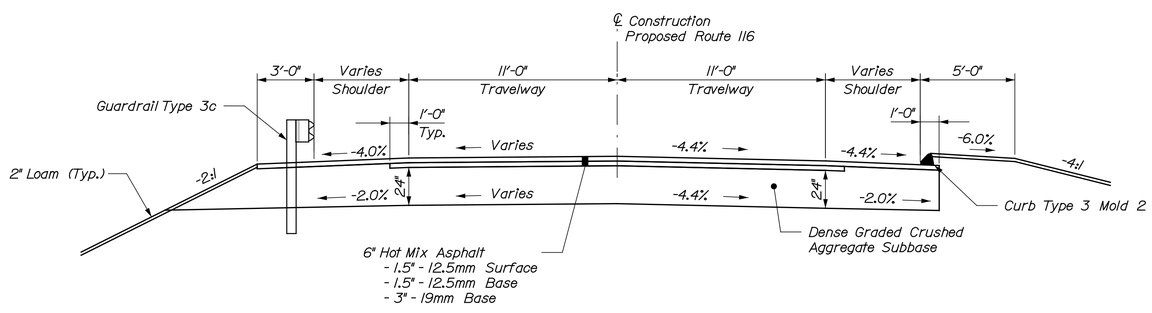

ROUTE 116 TRANSITION SECTION

DENSE GRADED CRUSHED AGGREGATE SUBBASE		
5' SHOULDER VARIES	11 FT. TRAVEL LANES 162.96 CY/100 LF	5' SHOULDER VARIES
STATION TO STATION	STATION TO STATION	STATION TO STATION
72+50 TO 73+80, LT	72+50 TO 73+80	73+50 TO 73+80, RT

SUPERELEVATION TABLE
ROUTE 116

Lt. Shoulder	Lt. Travelway	Station	Rt. Travelway	Rt. Shoulder
-4.00%	3.65%	71+50	-3.65%	-4.00%
-4.00%	3.65%	71+75	-3.98%	-4.00%
-4.00%	3.65%	72+00	-4.31%	-4.40%
-4.00%	3.65%	72+07	-4.40%	-4.40%
-4.00%	3.65%	72+50	-4.40%	-4.40%
-4.00%	1.15%	73+00	-4.40%	-4.40%
-4.00%	-1.35%	73+50	-4.40%	-4.40%
-6.46%	-2.86%	73+80	-3.96%	-6.50%

SUPERELEVATION TABLE
SOUTH STREET

Lt. Shoulder	Lt. Travelway	Station	Rt. Travelway	Rt. Shoulder
n/a	3.7%	50+16	-3.0%	n/a
		to		
n/a	Match Exist.	50+50	Match Exist.	n/a

Note:
1. See Intersection Grading and Layout Plan 2 for Additional Route 116 Superelevation and Grading Information.
2. All shoulders on this project will have full depth HMA (6") except for the following areas which will have 3" HMA depth:

   Sta. 71+25 to Sta. 73+80, Lt & Rt

3. See Typical Sections 1 Sheet for Additional Notes.

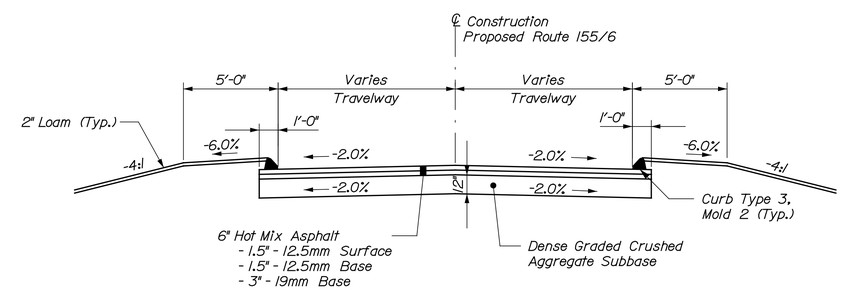

SOUTH STREET

DENSE GRADED CRUSHED AGGREGATE SUBBASE
TRAVEL LANES VARIES
STATION TO STATION
50+16 TO 50+50

T·Y·LIN INTERNATIONAL

STATE OF MAINE
DEPARTMENT OF TRANSPORTATION

BRIDGE PLANS

WIN 16705.00

BRIDGE NO. 2860

PROJ. MANAGER			
DESIGN-DETAILED	N.B.	BY	DATE
CHECKED-REVIEWED			
DESIGN2-DETAILED2			
DESIGN3-DETAILED3			
REVISIONS 1			
REVISIONS 2			
REVISIONS 3			
REVISIONS 4			
FIELD CHANGES			

SIGNATURE

P.E. NUMBER

DATE

PENOBSCOT RIVER BRIDGE
PENOBSCOT RIVER
HOWLAND-ENFIELD PENOBSCOT COUNTY

TYPICAL SECTIONS 2

SHEET NUMBER
17
OF 127

Date:12/16/2014
Username:
Division:
Filename: ...\HIGHWAY\MSTA\Typical_002.dgn

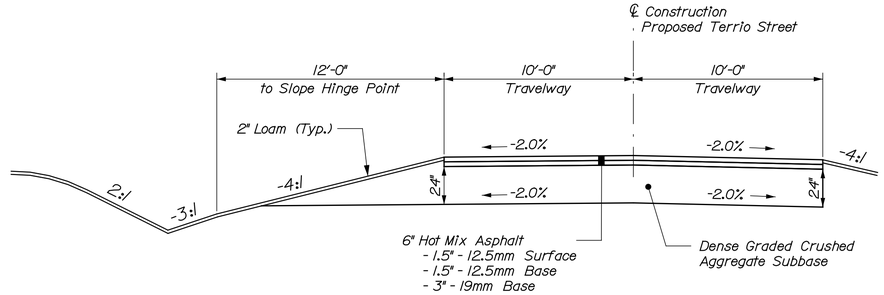

TERRIO STREET SECTION

DENSE GRADED CRUSHED AGGREGATE SUBBASE	
FORESLOPE 41.48 CY/100 LF	10' TRAVEL LANES 148.15 CY/100 LF
STATION TO STATION	STATION TO STATION
60+18 TO 61+34, LT	60+18 TO 62+02

SUPERELEVATION TABLE
TERRIO STREET

Lt. Shoulder	Lt. Travelway	Station	Rt. Travelway	Rt. Shoulder
n/a	-0.5%	60+18.46	n/a	n/a
n/a	-0.8%	60+24.28	-1.2%	n/a
n/a	-2.0%	60+50	-0.95%	n/a
n/a	-2.0%	61+00	-2.0%	n/a
		to		
n/a	-2.0%	62+00	-2.0%	n/a
n/a	Match Exist.	62+03	Match Exist.	n/a

Notes:
1. See Intersection Grading and Layout Plan 1 for Additional Terrio Street Superelevation and Grading Information.
2. See Intersection Grading and Layout Plan 3 for Additional Old County Road (North and South) Superelevation and Grading Information.
3. See Typical Sections 1 Sheet for Additional Notes.

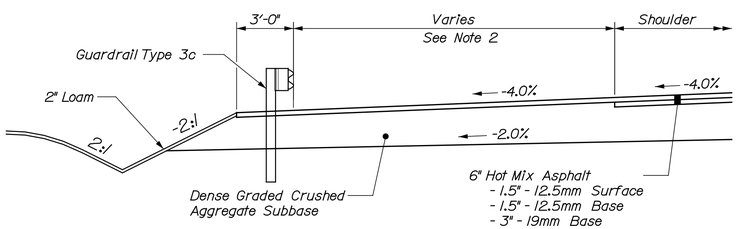

GUARDRAIL APPROACH LEFT

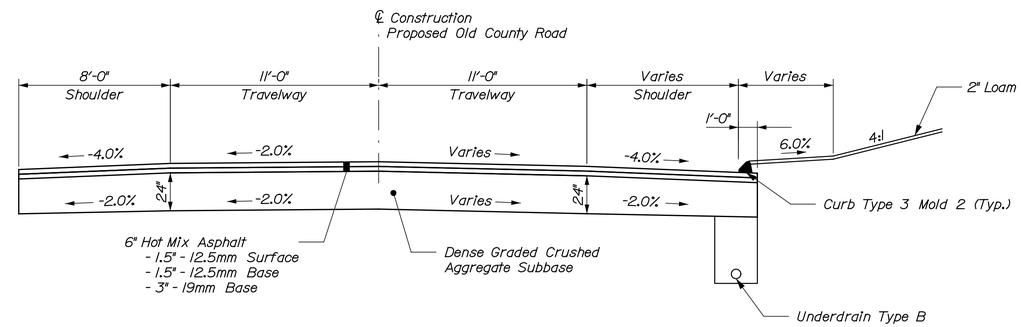

OLD COUNTY ROAD (NORTH) SECTION

DENSE GRADED CRUSHED AGGREGATE SUBBASE		
8' SHOULDER 64.44 CY/100 LF	11' TRAVEL LANES 162.96 CY/100 LF	SHOULDER VARIES
STATION TO STATION	STATION TO STATION	STATION TO STATION
90+20 TO 91+10, LT	90+16 TO 91+10	90+45 TO 91+10, RT

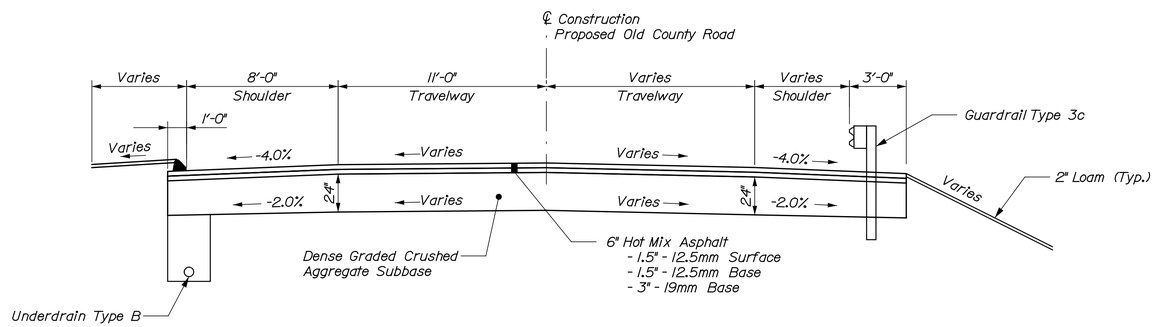

OLD COUNTY ROAD (SOUTH) SECTION

DENSE GRADED CRUSHED AGGREGATE SUBBASE		
8' SHOULDER 71.85 CY/100 LF	TRAVEL LANES VARIES	4' SHOULDER 64.44 CY/100 LF
STATION TO STATION	STATION TO STATION	STATION TO STATION
80+15 TO 80+90, LT	80+15 TO 80+90	80+15 TO 80+90, RT

STATE OF MAINE
DEPARTMENT OF TRANSPORTATION

BRIDGE PLANS

WIN 16705.00

BRIDGE NO. 2660

PROJ. MANAGER	NLB	BY	DATE
DESIGN-DETAILED			
CHECKED-REVIEWED			
DESIGN2-DETAILED2			
DESIGN3-DETAILED3			
REVISIONS 1			
REVISIONS 2			
REVISIONS 3			
REVISIONS 4			
FIELD CHANGES			

SIGNATURE

P.E. NUMBER

DATE

PENOBSCOT RIVER BRIDGE
PENOBSCOT RIVER
HOWLAND-ENFIELD PENOBSCOT COUNTY

TYPICAL SECTIONS 3

SHEET NUMBER
18
OF 127

T·Y·LIN INTERNATIONAL

Date:12/16/2014
Username:
Division:
Filename: ...\HIGHWAY\MSTA\Typical_003.dgn

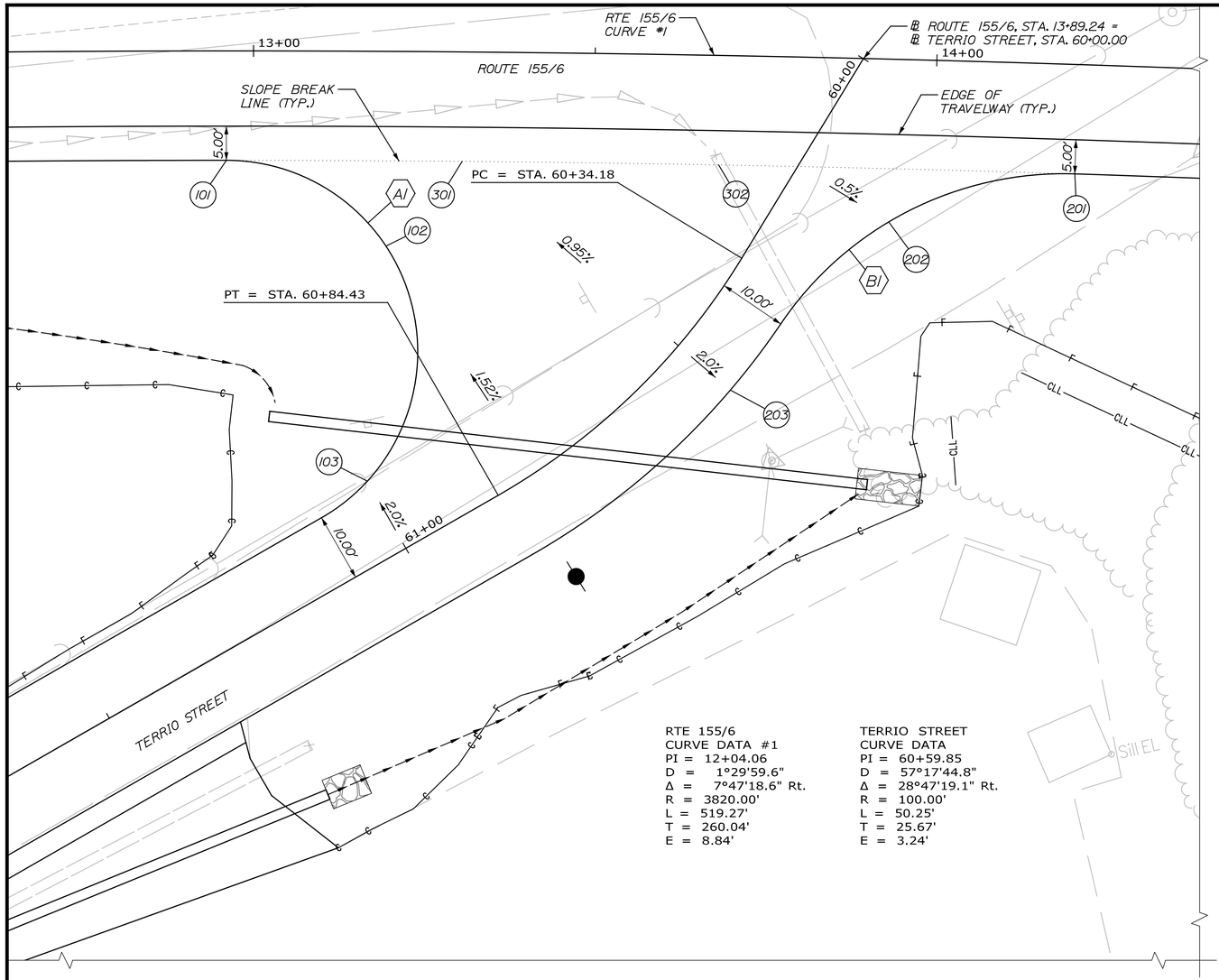

CURVE GEOMETRY DATA					
CURVE	RADIUS	POINT	STATION	OFFSET (FT)	
A1	28.00'	PRC	12+96.01	16.00	RT
		PT	61+08.49	10.00	RT
		CENTER	61+08.49	38.00	RT
B1	50.00'	PRC	14+20.69	16.00	RT
		PRC	60+38.94	10.00	LT
		CENTER	60+38.94	60.00	LT

POINT DATA					
POINT	DESCRIPTION	STATION	OFFSET (FT)		ELEV. (FT)
101	SHOULDER	12+96.01	16.00	RT	155.17
102	SHOULDER - CONTROL POINT	60+77.98	39.68	RT	154.55
103	SHOULDER - CONTROL POINT	61+00.00	11.32	RT	153.77
201	SHOULDER	14+20.69	16.00	RT	157.88
202	SHOULDER - CONTROL POINT	60+18.46	15.60	LT	157.00
203	SHOULDER	60+50.00	10.00	LT	156.20
301	SLOPE BREAK - CONTROL POINT	13+30.66	16.00	RT	156.00
302	SLOPE BREAK - CONTROL POINT	13+68.35	16.00	RT	156.84

NOTES:

1. SEE TYPICAL SECTION SHEETS FOR SLOPE AND SUPERELEVATION INFORMATION NOT SHOWN.
2. SEE CROSS SECTION SHEETS FOR DRAINAGE INFORMATION.
3. SEE PLAN AND PROFILE SHEETS FOR ADDITIONAL INFORMATION.

PLAN

10 0 10 20
Scale of Feet

T·Y·LIN INTERNATIONAL

STATE OF MAINE
DEPARTMENT OF TRANSPORTATION

BRIDGE PLANS

WIN 16705.00

BRIDGE NO. 2660

SIGNATURE
P.E. NUMBER
DATE

	NO.	BY	DATE
PROJ. MANAGER			
DESIGN-DETAILED			
CHECKED-REVIEWED			
DESIGN2-DETAILED2			
DESIGN3-DETAILED3			
REVISIONS 1			
REVISIONS 2			
REVISIONS 3			
REVISIONS 4			
FIELD CHANGES			

PENOBSCOT RIVER BRIDGE
PENOBSCOT RIVER
HOWLAND-ENFIELD PENOBSCOT COUNTY

INTERSECTION GRADING AND LAYOUT PLAN 1

SHEET NUMBER
19
OF 127

Filename: ...\HIGHWAY\MSTA\HDgrade_001.dgn Division: Username: Date:12/16/2014

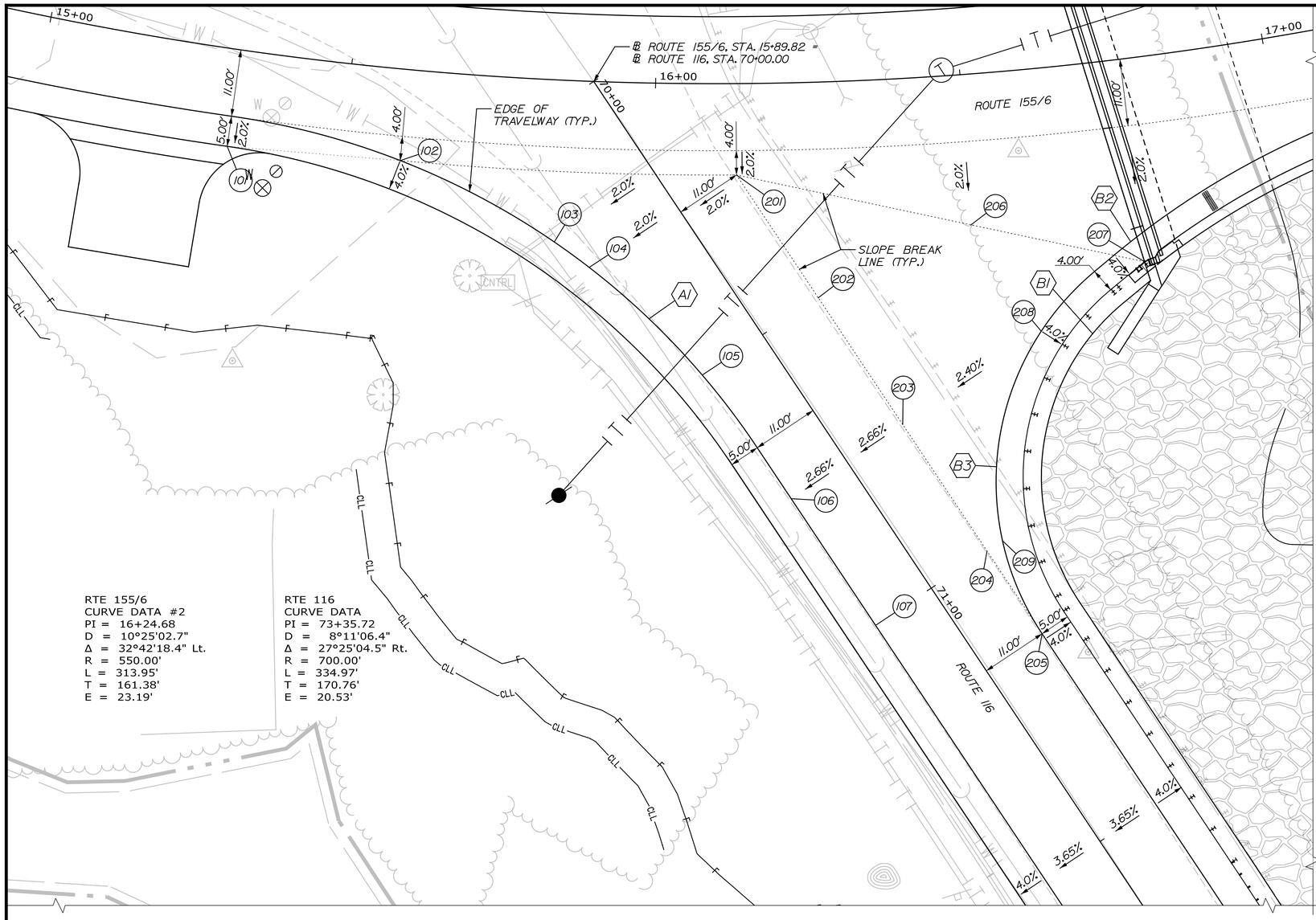

RTE 155/6
CURVE DATA #2
PI = 16+24.68
D = 10°25'02.7"
Δ = 32°42'18.4" Lt.
R = 550.00'
L = 313.95'
T = 161.38'
E = 23.19'

RTE 116
CURVE DATA
PI = 73+35.72
D = 8°11'06.4"
Δ = 27°25'04.5" Rt.
R = 700.00'
L = 334.97'
T = 170.76'
E = 20.53'

CURVE GEOMETRY DATA

CURVE	RADIUS	POINT	STATION	OFFSET (FT)	
A1	125.00'	PRC	15+31.64	11.00	RT
		PT	70+64.95	11.00	RT
		CENTER	70+64.95	136.00	RT
B1	37.00'	PC	70+78.48	52.27	LT
		PT	71+15.30	19.00	LT
		CENTER	71+15.30	56.00	LT
B2	135.67'	PRC	17+19.40	14.12	RT
		PT	70+71.12	55.22	LT
		CENTER	72+02.24	70.92	LT
B3	45.00'	PC	70+71.56	51.15	LT
		PT	71+16.30	11.00	LT
		CENTER	71+16.30	56.00	LT

POINT DATA

POINT	DESCRIPTION	STATION	OFFSET (FT)		ELEV. (FT)
101	SHOULDER - PRC	15+31.64	16.00	RT	159.58
102	SHLDR/TRAVELWAY - SLOPE BREAK	15+59.36	15.00	RT	159.86
103	TRAVELWAY - SLOPE BREAK	70+18.36	20.01	RT	159.87
104	TRAVELWAY - SLOPE BREAK	70+25.00	17.56	RT	159.84
105	TRAVELWAY - SLOPE BREAK	70+50.00	11.90	RT	159.60
106	TRAVELWAY - SLOPE BREAK	70+75.00	11.00	RT	158.93
107	TRAVELWAY - SLOPE BREAK	71+00.00	11.00	RT	157.51
201	SLOPE BREAK - CONTROL POINT	70+25.77	11.00	LT	160.40
202	SLOPE BREAK - CONTROL POINT	70+50.00	11.00	LT	160.14
203	SLOPE BREAK - CONTROL POINT	70+75.00	11.00	LT	159.51
204	SLOPE BREAK - CONTROL POINT	71+00.00	11.00	LT	158.17
205	TRAVELWAY - SLOPE BREAK	71+16.30	11.00	LT	157.06
206	SLOPE BREAK - CONTROL POINT	16+50.00	24.71	RT	160.58
207	GUTTER LINE - CONTROL POINT	16+76.40	33.51	RT	160.66
208	TRAVELWAY - SLOPE BREAK	70+75.00	38.14	LT	160.17
209	TRAVELWAY - SLOPE BREAK	71+00.00	14.06	LT	158.26

NOTES:

1. SEE TYPICAL SECTION SHEETS FOR SLOPE AND SUPERELEVATION INFORMATION NOT SHOWN.
2. SEE CROSS SECTION SHEETS FOR DRAINAGE INFORMATION.
3. SEE PLAN AND PROFILE SHEETS FOR ADDITIONAL INFORMATION.

PLAN

10 0 10 20
Scale of Feet

T·Y·LIN INTERNATIONAL

STATE OF MAINE
DEPARTMENT OF TRANSPORTATION

BRIDGE PLANS

WIN 16705.00

BRIDGE NO. 2860

	BY	DATE
PROJ. MANAGER	NLB	
DESIGN-DETAILED		
CHECKED-REVIEWED		
DESIGN2-DETAILED2		
DESIGN3-DETAILED3		
REVISIONS 1		
REVISIONS 2		
REVISIONS 3		
REVISIONS 4		
FIELD CHANGES		

SIGNATURE
P.E. NUMBER
DATE

PENOBSCOT RIVER BRIDGE
PENOBSCOT RIVER
HOWLAND-ENFIELD PENOBSCOT COUNTY

INTERSECTION GRADING AND LAYOUT PLAN 2

SHEET NUMBER
20
OF 127

Filename: ...\HIGHWAY\MSTA\HDgrade_002.dgn Division: Username: Date:12/16/2014

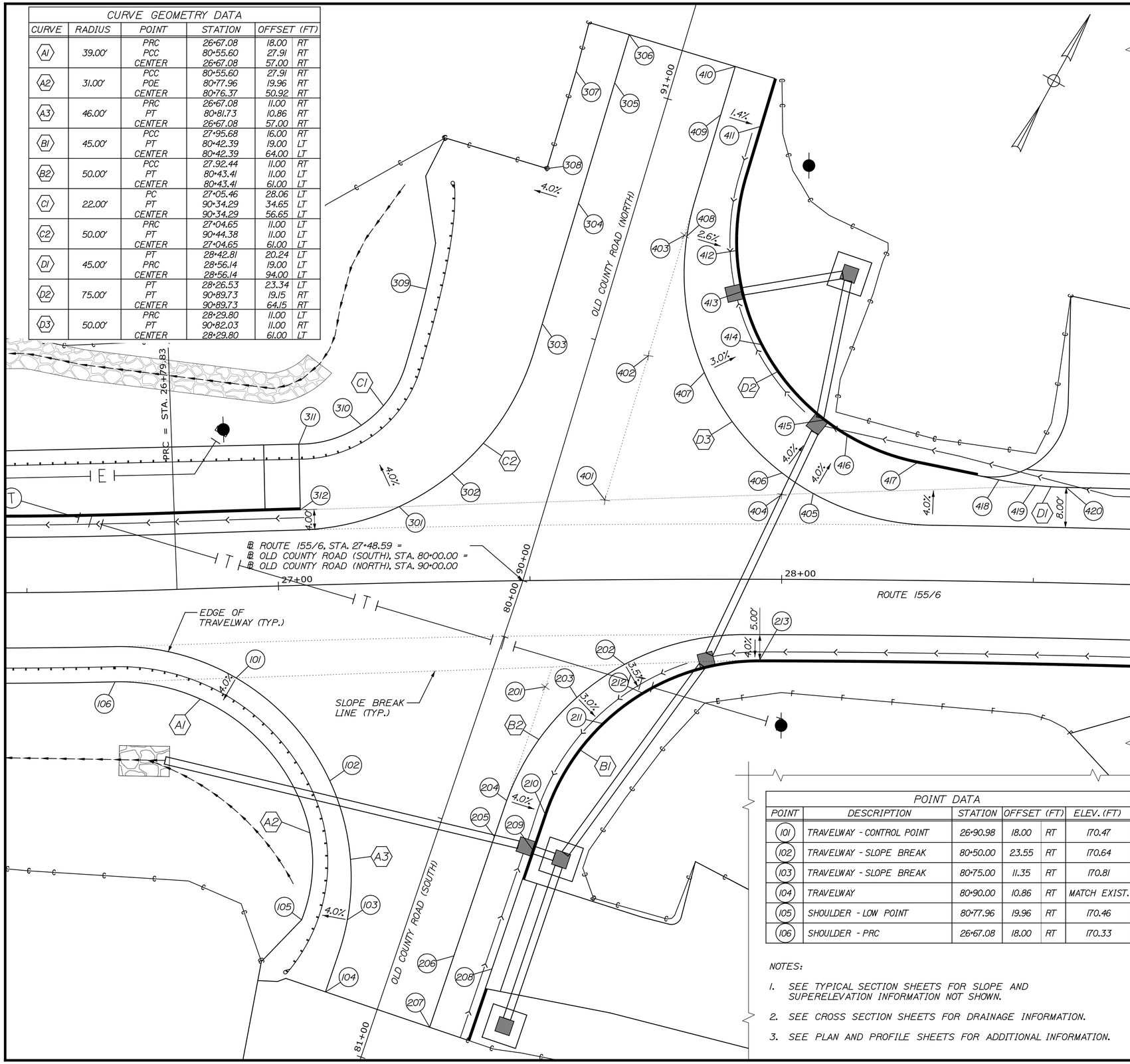

CURVE GEOMETRY DATA					
CURVE	RADIUS	POINT	STATION	OFFSET (FT)	
A1	39.00'	PRC	26+67.08	18.00	RT
		PCC	80+55.60	27.91	RT
		CENTER	26+67.08	57.00	RT
A2	31.00'	PCC	80+55.60	27.91	RT
		POE	80+77.96	19.96	RT
		CENTER	80+76.37	50.92	RT
A3	46.00'	PRC	26+67.08	11.00	RT
		PT	80+81.73	10.86	RT
		CENTER	26+67.08	57.00	RT
B1	45.00'	PCC	27+95.68	16.00	RT
		PT	80+42.39	19.00	LT
		CENTER	80+42.39	64.00	LT
B2	50.00'	PCC	27.92.44	11.00	RT
		PT	80+43.41	11.00	LT
		CENTER	80+43.41	61.00	LT
C1	22.00'	PC	27+05.46	28.06	LT
		PT	90+34.29	34.65	LT
		CENTER	90+34.29	56.65	LT
C2	50.00'	PRC	27+04.65	11.00	LT
		PT	90+44.38	11.00	LT
		CENTER	27+04.65	61.00	LT
D1	45.00'	PT	28+42.81	20.24	LT
		PRC	28+56.14	19.00	LT
		CENTER	28+56.14	94.00	LT
D2	75.00'	PT	28+26.53	23.34	LT
		PT	90+89.73	19.15	RT
		CENTER	90+89.73	64.15	RT
D3	50.00'	PRC	28+29.80	11.00	LT
		PT	90+82.03	11.00	RT
		CENTER	28+29.80	61.00	LT

POINT DATA					
POINT	DESCRIPTION	STATION	OFFSET (FT)		ELEV. (FT)
101	TRAVELWAY - CONTROL POINT	26+90.98	18.00	RT	170.47
102	TRAVELWAY - SLOPE BREAK	80+50.00	23.55	RT	170.64
103	TRAVELWAY - SLOPE BREAK	80+75.00	11.35	RT	170.81
104	TRAVELWAY	80+90.00	10.86	RT	MATCH EXIST.
105	SHOULDER - LOW POINT	80+77.96	19.96	RT	170.46
106	SHOULDER - PRC	26+67.08	18.00	RT	170.33

POINT DATA (CONTINUED)					
POINT	DESCRIPTION	STATION	OFFSET (FT)		ELEV. (FT)
201	SLOPE BREAK - CONTROL POINT	80+09.25	11.00	LT	170.92
202	TRAVELWAY - CONTROL POINT	27+68.68	16.84	RT	171.21
203	TRAVELWAY - SLOPE BREAK	80+18.53	17.63	LT	170.90
204	TRAVELWAY - SLOPE BREAK	80+42.39	11.00	LT	170.82
205	TRAVELWAY - SLOPE BREAK	80+50.00	11.00	LT	170.79
206	TRAVELWAY - SLOPE BREAK	80+75.00	11.00	LT	170.69
207	TRAVELWAY	80+90.00	11.00	LT	MATCH EXIST.
208	GUTTER LINE	80+75.00	19.00	LT	170.37
209	GUTTER LINE	80+50.00	19.00	LT	170.47
210	GUTTER LINE - PT	80+42.39	19.00	LT	170.50
211	GUTTER LINE	80+21.80	23.99	LT	170.69
212	GUTTER LINE	80+13.47	29.52	LT	170.98
213	GUTTER LINE	27+95.68	16.00	RT	171.78
301	TRAVELWAY - CONTROL POINT	27+24.33	15.14	LT	171.00
302	TRAVELWAY - SLOPE BREAK	90+16.34	19.60	LT	171.00
303	TRAVELWAY - SLOPE BREAK	90+50.00	11.00	LT	170.99
304	TRAVELWAY - SLOPE BREAK	90+75.00	11.00	LT	170.87
305	TRAVELWAY - SLOPE BREAK	91+00.00	11.00	LT	170.97
306	TRAVELWAY	91+10.00	11.00	LT	MATCH EXIST.
307	CUT LINE - MATCH EXISTING	91+00.00	19.00	LT	MATCH EXIST.
308	CUT LINE - MATCH EXISTING	90+79.82	19.00	LT	MATCH EXIST.
309	SHOULDER	90+50.00	35.08	LT	170.03
310	SHOULDER - CONTROL POINT	90+20.34	39.63	LT	170.29
311	SHOULDER - CONTROL POINT	27+04.84	28.06	LT	170.99
312	GUTTER LINE	27+04.77	15.00	LT	170.73
401	SLOPE BREAK - CONTROL POINT	27+65.02	15.84	LT	171.63
402	SLOPE BREAK - CONTROL POINT	90+50.00	11.00	RT	171.34
403	SLOPE BREAK - CONTROL POINT	90+75.00	11.00	RT	171.16
404	SLOPE BREAK - CONTROL POINT	28+00.00	16.88	LT	172.28
405	TRAVELWAY - CONTROL POINT	28+06.15	17.11	LT	172.42
406	TRAVELWAY - SLOPE BREAK	28+00.00	21.15	LT	172.11
407	TRAVELWAY - SLOPE BREAK	90+50.00	22.60	RT	171.31
408	TRAVELWAY - SLOPE BREAK	90+75.00	11.50	RT	171.15
409	TRAVELWAY - SLOPE BREAK	91+00.00	11.00	RT	171.20
410	TRAVELWAY	91+10.00	11.00	RT	MATCH EXIST.
411	GUTTER LINE	91+00.00	19.15	RT	171.08
412	GUTTER LINE	90+75.00	21.63	RT	170.89
413	GUTTER LINE - LOW POINT	90+67.50	25.02	RT	170.86
414	GUTTER LINE	90+58.55	31.70	RT	170.94
415	GUTTER LINE - LOW POINT	90+47.75	47.94	RT	171.58
416	GUTTER LINE	90+46.04	53.39	RT	171.89
417	GUTTER LINE - PC	28+26.53	23.34	LT	172.70
418	GUTTER LINE - PT	28+42.81	20.24	LT	173.29
419	GUTTER LINE	28+50.00	19.26	LT	173.55
420	GUTTER LINE - PC	28+56.14	19.00	LT	173.74

NOTES:

1. SEE TYPICAL SECTION SHEETS FOR SLOPE AND SUPERELEVATION INFORMATION NOT SHOWN.
2. SEE CROSS SECTION SHEETS FOR DRAINAGE INFORMATION.
3. SEE PLAN AND PROFILE SHEETS FOR ADDITIONAL INFORMATION.

PLAN

10 0 10 20
Scale of Feet

T·Y·LIN INTERNATIONAL

STATE OF MAINE
DEPARTMENT OF TRANSPORTATION

BRIDGE PLANS

WIN 16705.00

BRIDGE NO. 2660

PROJ. MANAGER	NB	BY	DATE
DESIGN-DETAILED			
CHECKED-REVIEWED			
DESIGN2-DETAILED2			
DESIGN3-DETAILED3			
REVISIONS 1			
REVISIONS 2			
REVISIONS 3			
REVISIONS 4			
FIELD CHANGES			

SIGNATURE

P.E. NUMBER

DATE

PENOBSCOT RIVER BRIDGE
PENOBSCOT RIVER
HOWLAND-ENFIELD PENOBSCOT COUNTY

INTERSECTION GRADING AND LAYOUT PLAN 3

SHEET NUMBER

21

OF 127

Date:12/16/2014

Username:

Division:

Filename: ...\HIGHWAY\MSTA\HDgrade_003.dgn

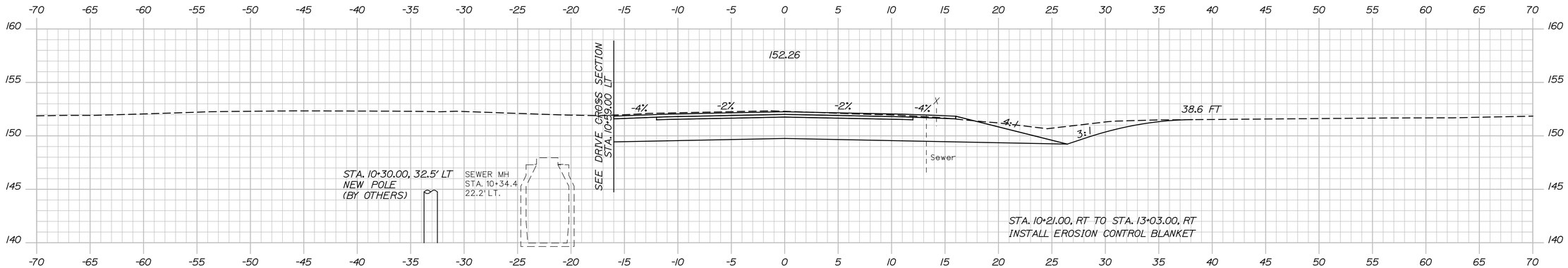

10+50.00

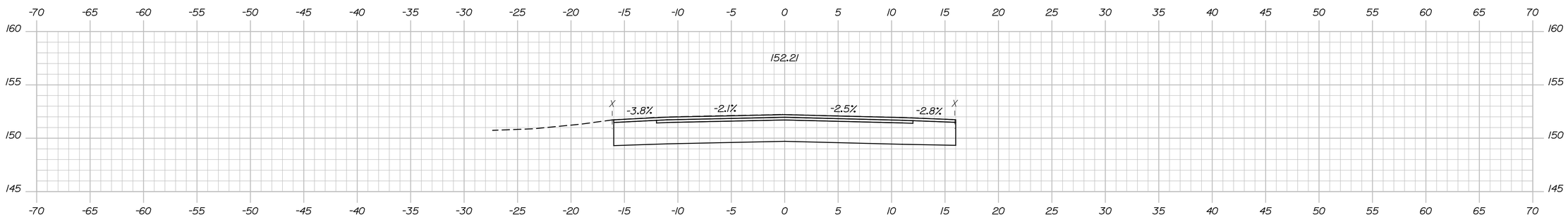

10+00.00

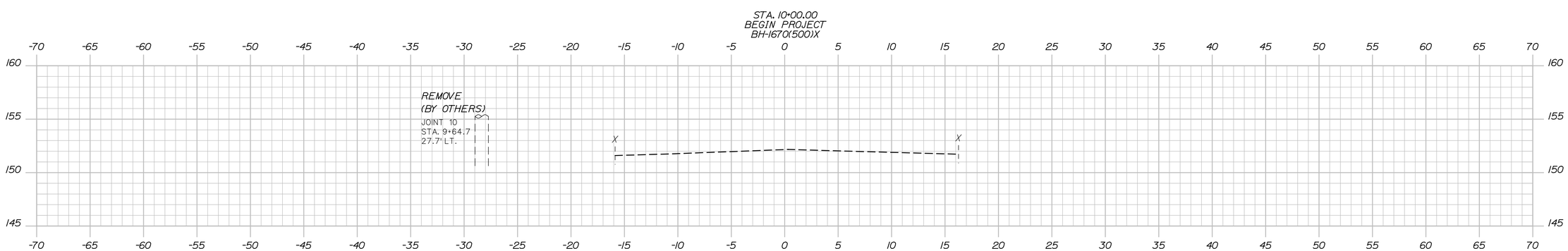

9+50.00

Sta. 9+50.00 to Sta. 10+50.00

Date:12/16/2014

Username:

Division:

Filename: ...\HIGHWAY\MSTA\XSections.dgn

STATE OF MAINE
DEPARTMENT OF TRANSPORTATION

BRIDGE PLANS

WIN 16705.00

BRIDGE NO. 2660

PROJ. MANAGER			
DESIGN-DETAILED			
CHECKED-REVIEWED			
DESIGN2-DETAILED2			
DESIGN3-DETAILED3			
REVISIONS 1			
REVISIONS 2			
REVISIONS 3			
REVISIONS 4			
FIELD CHANGES			

	NO.	BY	DATE

SIGNATURE

P.E. NUMBER

DATE

PENOBSCOT RIVER BRIDGE
PENOBSCOT RIVER
HOWLAND-ENFIELD PENOBSCOT COUNTY

CROSS SECTIONS
ROUTE 155/6

SHEET NUMBER
22
OF 127

TY·LIN INTERNATIONAL

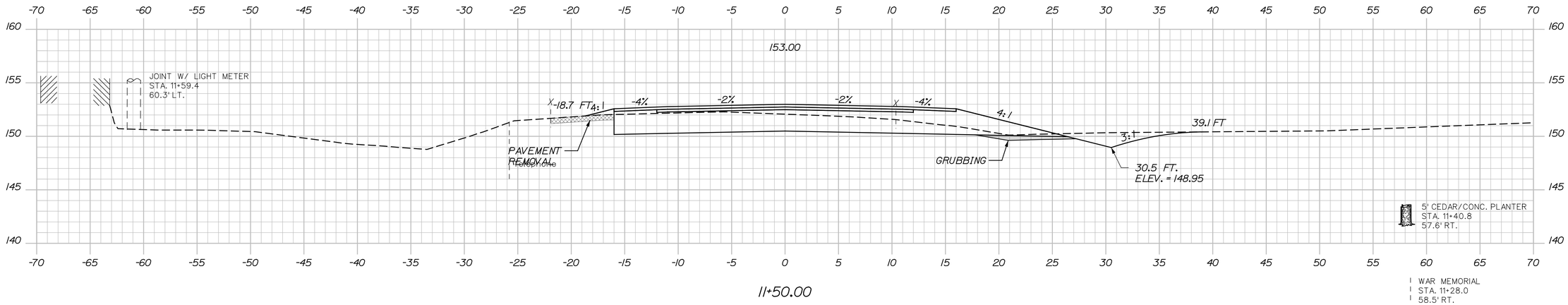

11+50.00

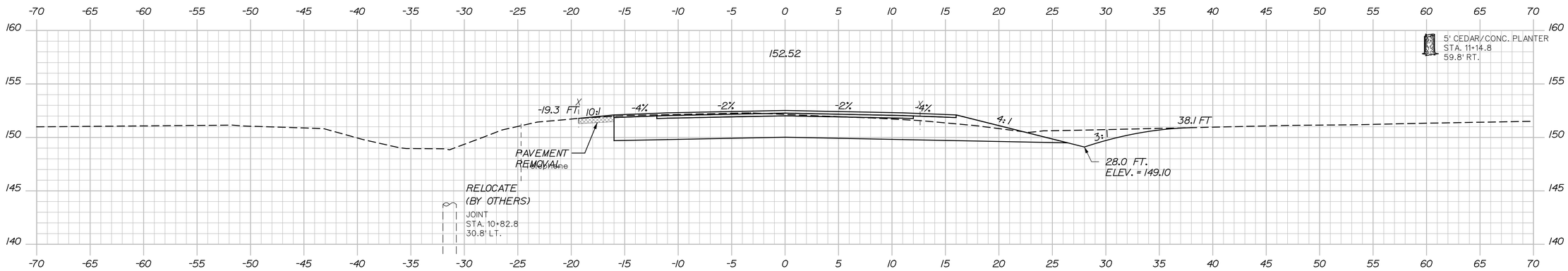

11+00.00

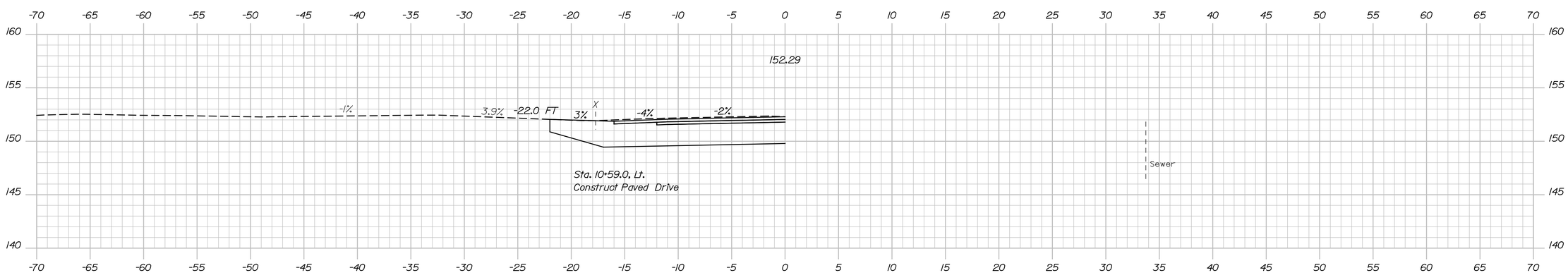

10+59.00, Drive

Sta. 10+59.00 to Sta. 11+50.00

Filename: ...\HIGHWAY\MSTA\XSections.dgn Division: Username: Date:12/16/2014

STATE OF MAINE
DEPARTMENT OF TRANSPORTATION

BRIDGE PLANS

WIN 16705.00

BRIDGE NO. 2660

PROJ. MANAGER	N.B.	BY	DATE
DESIGN-DETAILED			
CHECKED-REVIEWED			
DESIGN2-DETAILED2			
DESIGN3-DETAILED3			
REVISIONS 1			
REVISIONS 2			
REVISIONS 3			
REVISIONS 4			
FIELD CHANGES			

SIGNATURE

P.E. NUMBER

DATE

PENOBSCOT RIVER BRIDGE
PENOBSCOT RIVER
HOWLAND-ENFIELD PENOBSCOT COUNTY

CROSS SECTIONS
ROUTE 155/6

SHEET NUMBER
23
OF 127

T·Y·LIN INTERNATIONAL

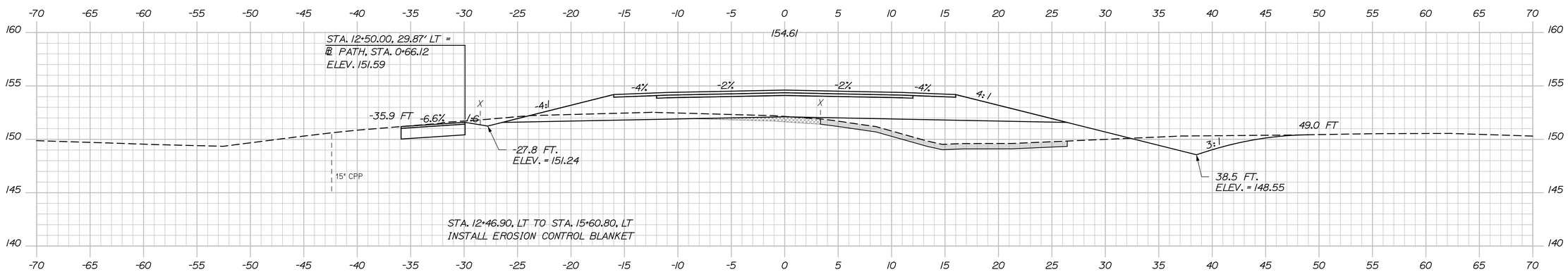

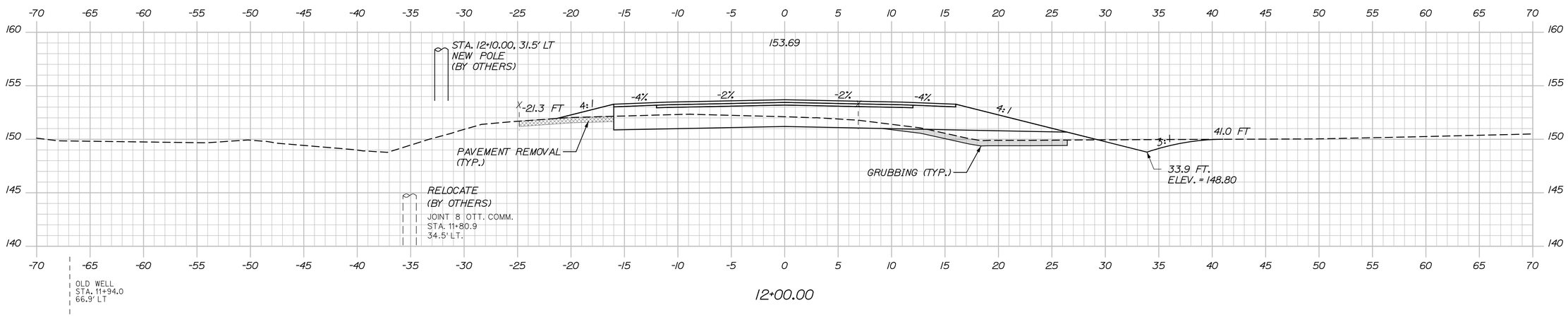

Sta. 12+00.00 to Sta. 12+50.00

Date:12/16/2014

Username:

Division:

Filename: ...\HIGHWAY\MSTA\XSections.dgn

STATE OF MAINE
DEPARTMENT OF TRANSPORTATION

BRIDGE PLANS

WIN
16705.00

BRIDGE NO. 2660

PROJ. MANAGER			
DESIGN-DETAILED			
CHECKED-REVIEWED			
DESIGN2-DETAILED2			
DESIGN3-DETAILED3			
REVISIONS 1			
REVISIONS 2			
REVISIONS 3			
REVISIONS 4			
FIELD CHANGES			

SIGNATURE

P.E. NUMBER

DATE

PENOBSCOT RIVER BRIDGE
PENOBSCOT RIVER
HOWLAND-ENFIELD PENOBSCOT COUNTY

CROSS SECTIONS
ROUTE 155/6

SHEET NUMBER

24

OF 127

TYLIN INTERNATIONAL

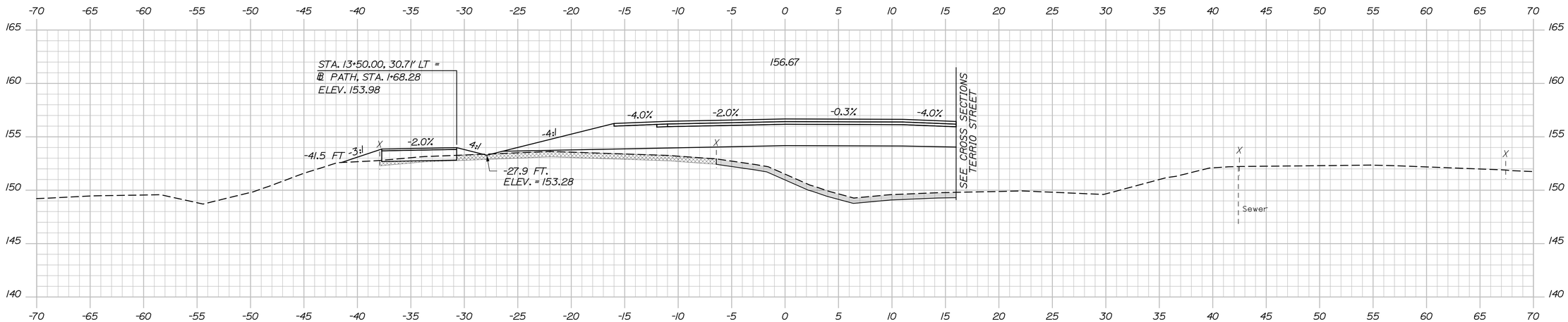

13+50.00

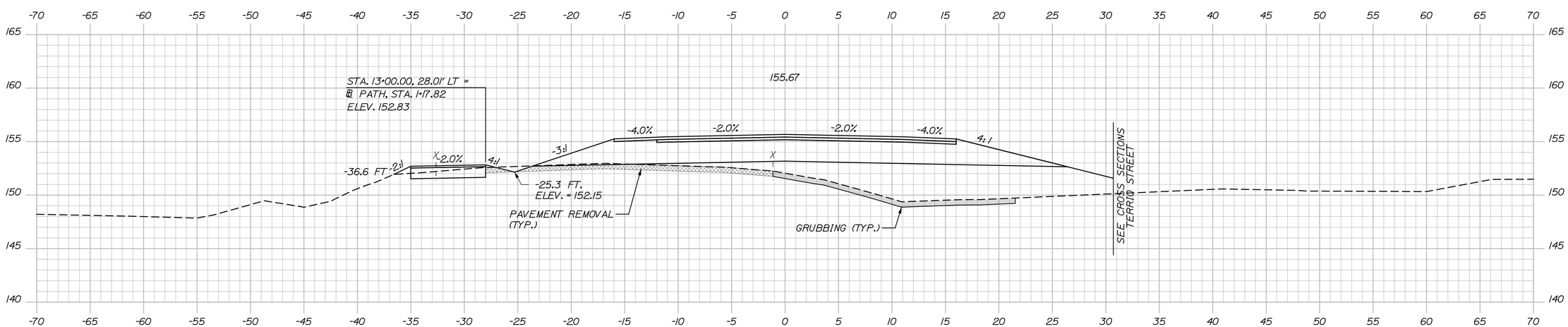

13+00.00

Sta. 13+00.00 to Sta. 13+50.00

Filename: ...\HIGHWAY\MSTA\XSections.dgn Division: Username: Date:12/16/2014

T·Y·LIN INTERNATIONAL

STATE OF MAINE
DEPARTMENT OF TRANSPORTATION

BRIDGE PLANS

WIN 16705.00

BRIDGE NO. 2660

		BY	DATE
PROJ. MANAGER	N.B		
DESIGN-DETAILED			
CHECKED-REVIEWED			
DESIGN2-DETAILED2			
DESIGN3-DETAILED3			
REVISIONS 1			
REVISIONS 2			
REVISIONS 3			
REVISIONS 4			
FIELD CHANGES			

SIGNATURE

P.E. NUMBER

DATE

PENOBSCOT RIVER BRIDGE
PENOBSCOT RIVER
HOWLAND-ENFIELD PENOBSCOT COUNTY

CROSS SECTIONS
ROUTE 155/6

SHEET NUMBER
25
OF 127

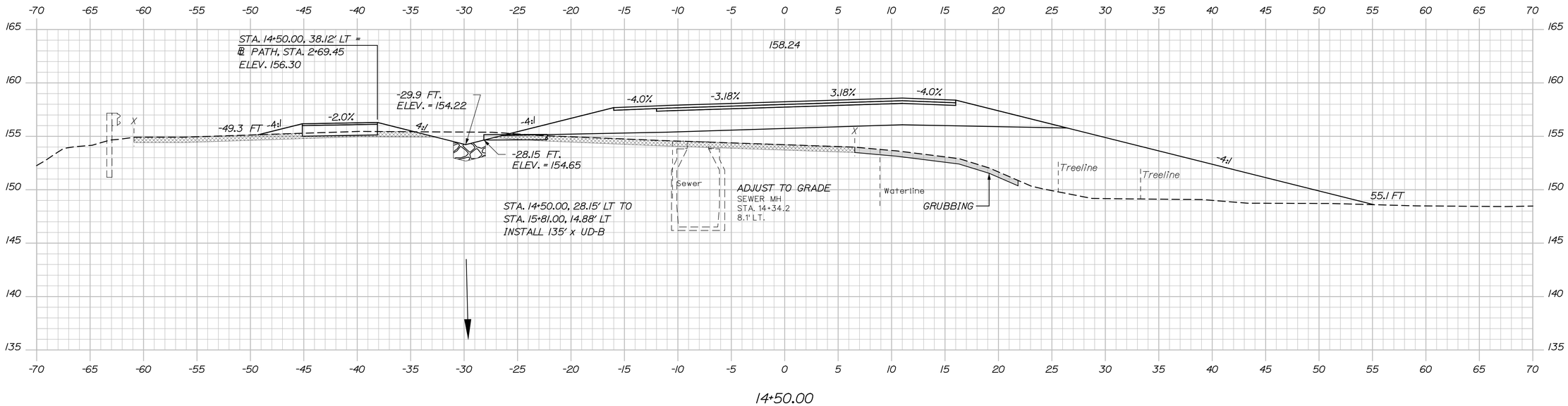

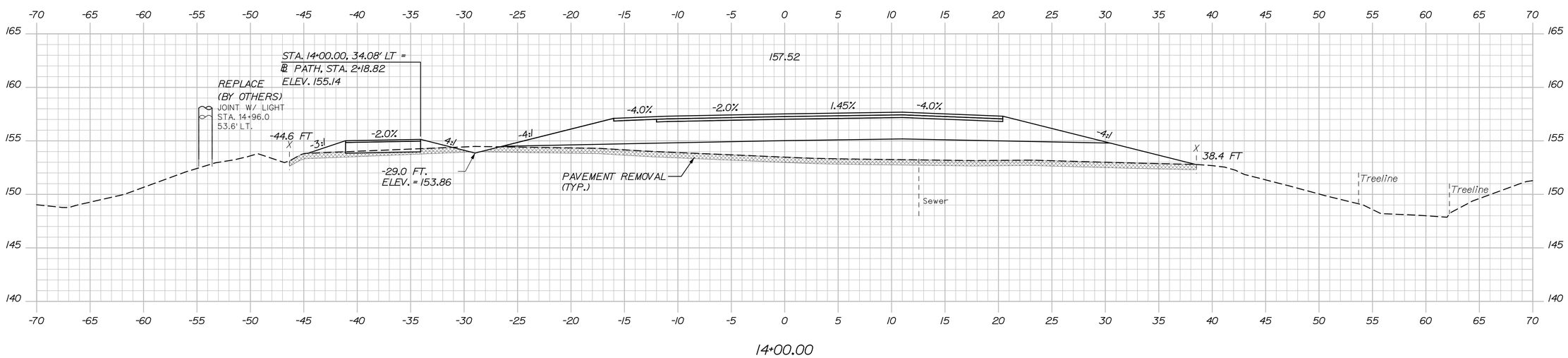

Sta. 14+00.00 to Sta. 14+50.00

Filename: ...\HIGHWAY\MSTA\XSections.dgn Division: Username: Date:12/16/2014

STATE OF MAINE
DEPARTMENT OF TRANSPORTATION

BRIDGE PLANS

WIN 16705.00

BRIDGE NO. 2660

PROJ. MANAGER			
DESIGN-DETAILED			
CHECKED-REVIEWED			
DESIGN2-DETAILED2			
DESIGN3-DETAILED3			
REVISIONS 1			
REVISIONS 2			
REVISIONS 3			
REVISIONS 4			
FIELD CHANGES			

SIGNATURE

P.E. NUMBER

DATE

PENOBSCOT RIVER BRIDGE
PENOBSCOT RIVER
HOWLAND-ENFIELD PENOBSCOT COUNTY

CROSS SECTIONS
ROUTE 155/6

T·Y·LIN INTERNATIONAL

SHEET NUMBER
26
OF 127

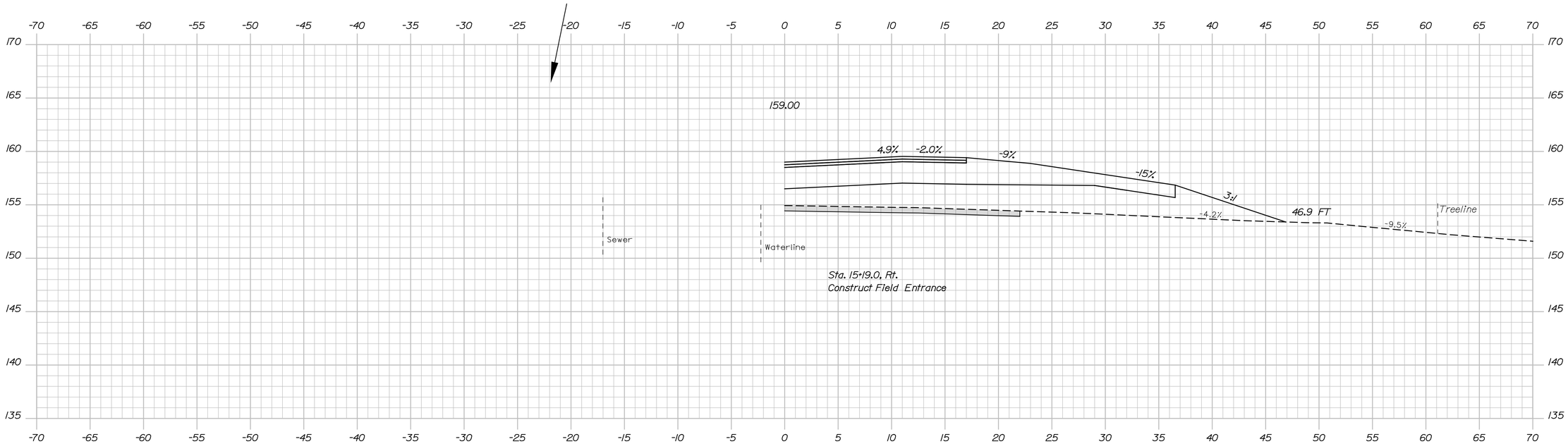

15+19.00, Drive

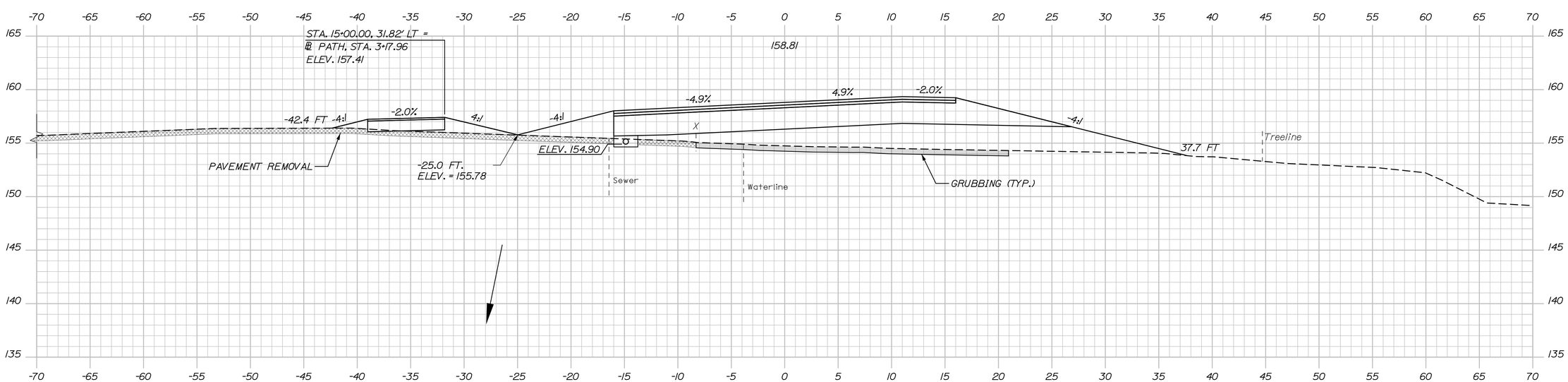

15+00.00

Sta. 15+00.00 to Sta. 15+19.00

Filename: ...\HIGHWAY\MSTA\XSections.dgn Division: Username: Date:12/16/2014

STATE OF MAINE
DEPARTMENT OF TRANSPORTATION

BRIDGE PLANS

WIN 16705.00

BRIDGE NO. 2660

	SIGNATURE	P.E. NUMBER	DATE
PROJ. MANAGER			
DESIGN-DETAILED			
CHECKED-REVIEWED			
DESIGN2-DETAILED2			
DESIGN3-DETAILED3			
REVISIONS 1			
REVISIONS 2			
REVISIONS 3			
REVISIONS 4			
FIELD CHANGES			

	N.B.	BY	DATE
			.
			.

PENOBSCOT RIVER BRIDGE
PENOBSCOT RIVER
HOWLAND-ENFIELD PENOBSCOT COUNTY

CROSS SECTIONS
ROUTE 155/6

T·Y·LIN INTERNATIONAL

SHEET NUMBER
27
OF 127

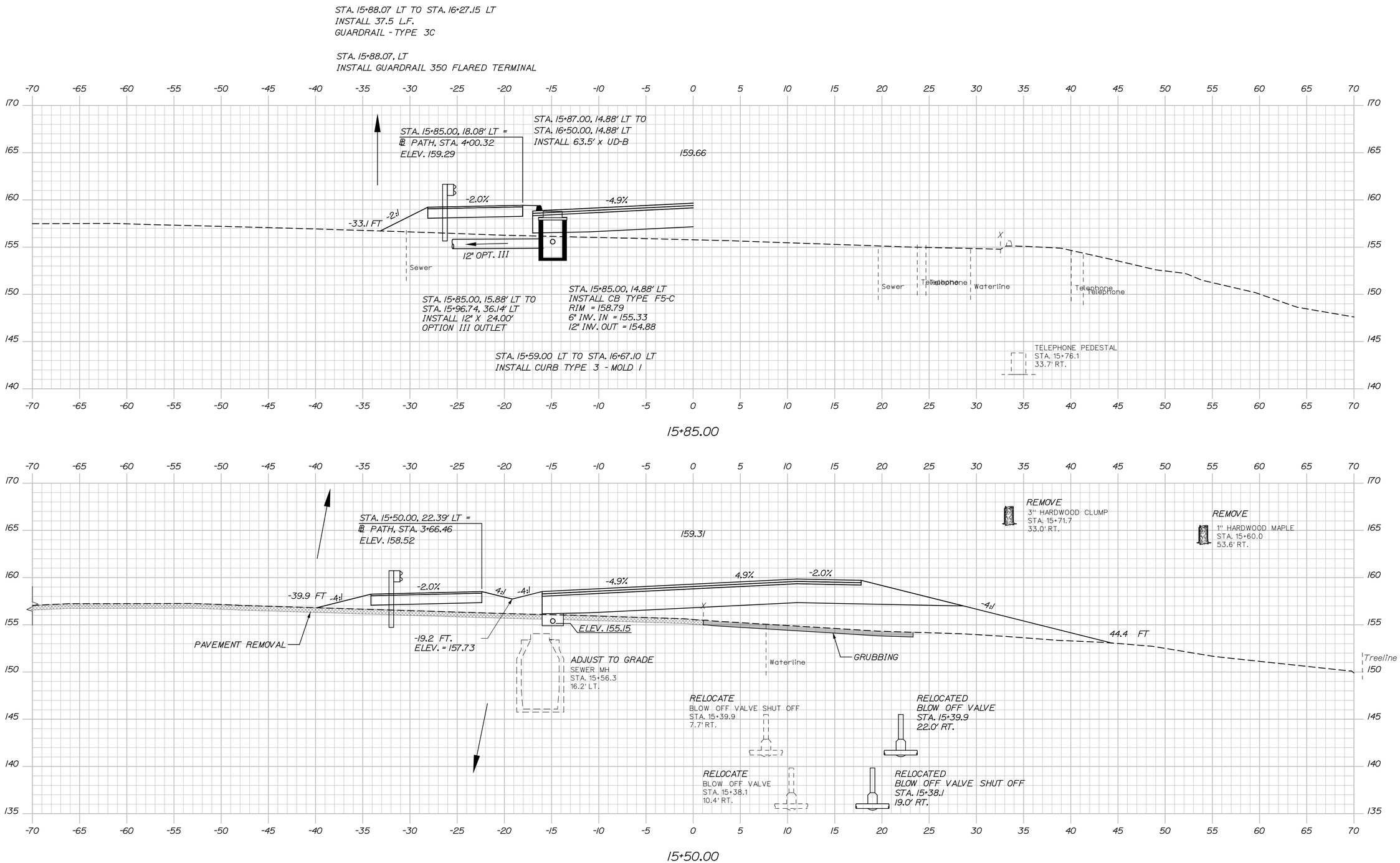

Sta. 15+50.00 to Sta. 15+85.00

Filename: ...\HIGHWAY\MSTA\XSections.dgn Division: Username: Date:12/16/2014

STATE OF MAINE
DEPARTMENT OF TRANSPORTATION

BRIDGE PLANS

WIN 16705.00

BRIDGE NO. 2660

	DATE	BY	N.B.
PROJ. MANAGER			
DESIGN-DETAILED			
CHECKED-REVIEWED			
DESIGN2-DETAILED2			
DESIGN3-DETAILED3			
REVISIONS 1			
REVISIONS 2			
REVISIONS 3			
REVISIONS 4			
FIELD CHANGES			

SIGNATURE

P.E. NUMBER

DATE

PENOBSCOT RIVER BRIDGE
PENOBSCOT RIVER
HOWLAND-ENFIELD PENOBSCOT COUNTY

CROSS SECTIONS
ROUTE 155/6

T·Y·LIN INTERNATIONAL

SHEET NUMBER

28

OF 127

Filename: ...\HIGHWAY\MSTA\XSections.dgn Division: Username: Date:12/16/2014

Sta. 16+00.00 to Sta. 16+00.00

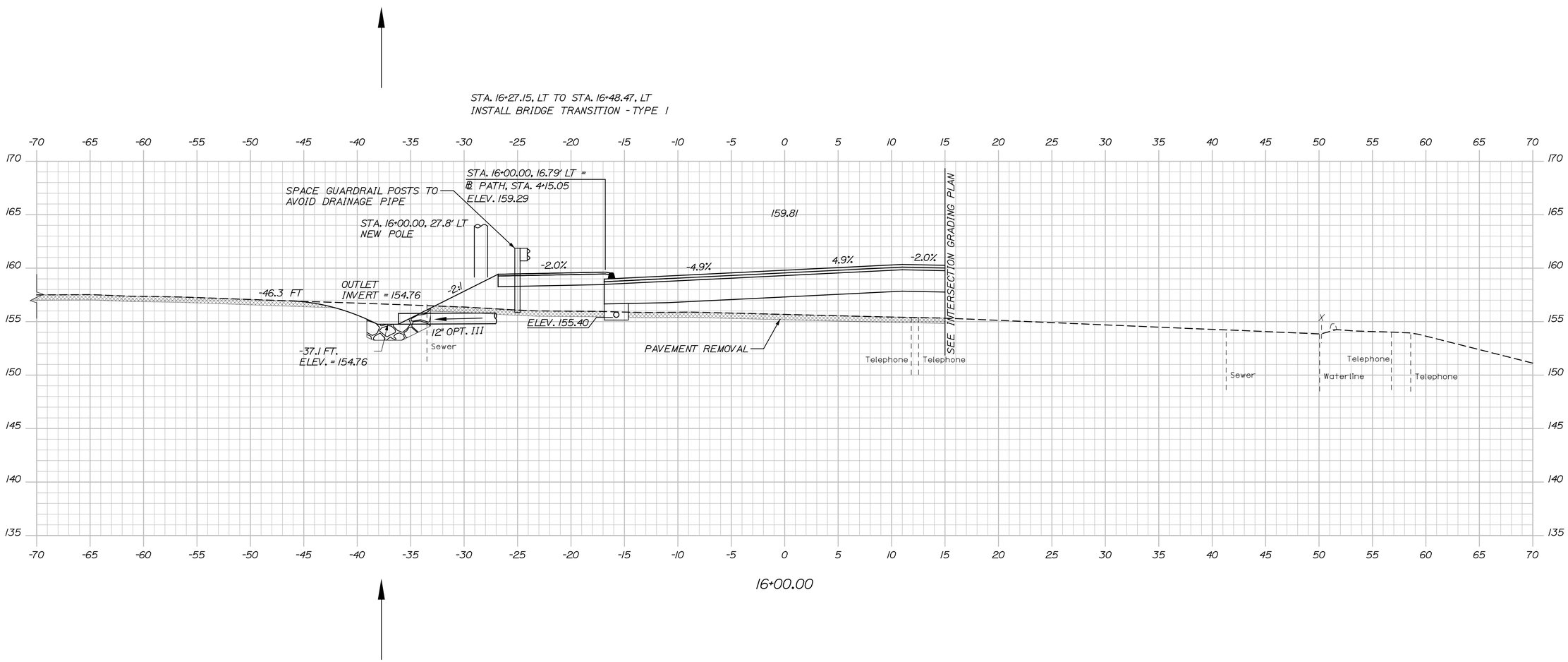

T·Y·LIN INTERNATIONAL

STATE OF MAINE
DEPARTMENT OF TRANSPORTATION

BRIDGE NO. 2660 WIN 16705.00 BRIDGE PLANS

PROJ. MANAGER	N.B.	BY	DATE
DESIGN-DETAILED			
CHECKED-REVIEWED			
DESIGN2-DETAILED2			
DESIGN3-DETAILED3			
REVISIONS 1			
REVISIONS 2			
REVISIONS 3			
REVISIONS 4			
FIELD CHANGES			

SIGNATURE

P.E. NUMBER

DATE

PENOBSCOT RIVER BRIDGE
PENOBSCOT RIVER
HOWLAND-ENFIELD PENOBSCOT COUNTY

CROSS SECTIONS ROUTE 155/6

SHEET NUMBER
29
OF 127

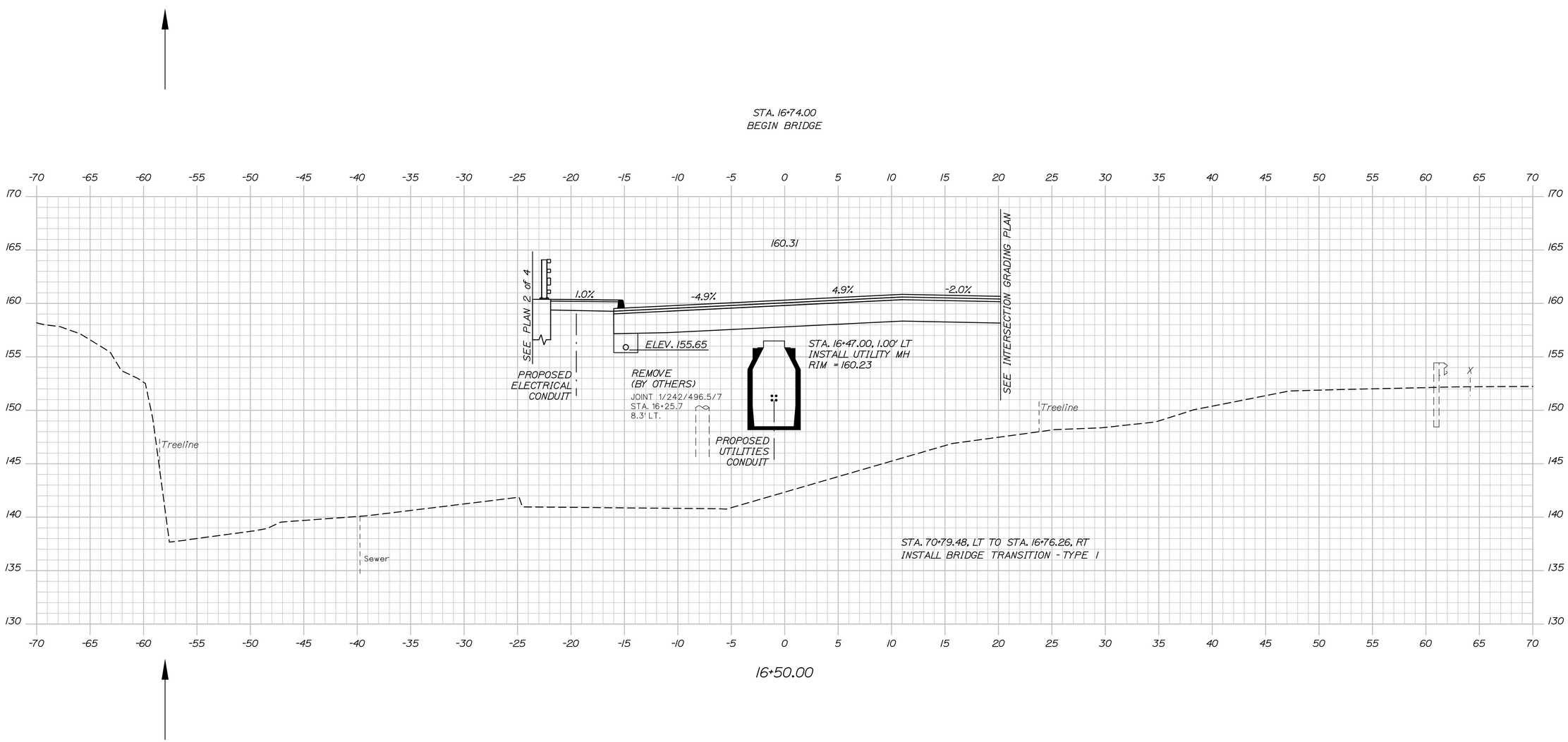

Sta. 16+50.00 to Sta. 16+50.00

STATE OF MAINE
DEPARTMENT OF TRANSPORTATION

BRIDGE NO. 2660

WIN 16705.00

BRIDGE PLANS

PROJ. MANAGER			
DESIGN-DETAILED			
CHECKED-REVIEWED			
DESIGN2-DETAILED2			
DESIGN3-DETAILED3			
REVISIONS 1			
REVISIONS 2			
REVISIONS 3			
REVISIONS 4			
FIELD CHANGES			

SIGNATURE

P.E. NUMBER

DATE

PENOBSCOT RIVER BRIDGE
PENOBSCOT RIVER
HOWLAND-ENFIELD PENOBSCOT COUNTY

CROSS SECTIONS
ROUTE 155/6

SHEET NUMBER
30
OF 127

T·Y·LIN INTERNATIONAL

Date:12/16/2014 Username: Division: Filename: ...\HIGHWAY\MSTA\XSections.dgn

STA. 27+05.44, LT TO STA. 27+29.00, LT
INSTALL 31.43 L.F.
GUARDRAIL TYPE 3C - 25' RADIUS

STA. 26+44.01, LT TO STA. 27+05.44, LT
INSTALL 60.75 L.F.
GUARDRAIL TYPE 3C

STA. 26+67.08, RT TO STA. 27+05.87, RT
INSTALL 49.89 L.F.
GUARDRAIL TYPE 3C - 42' RADIUS

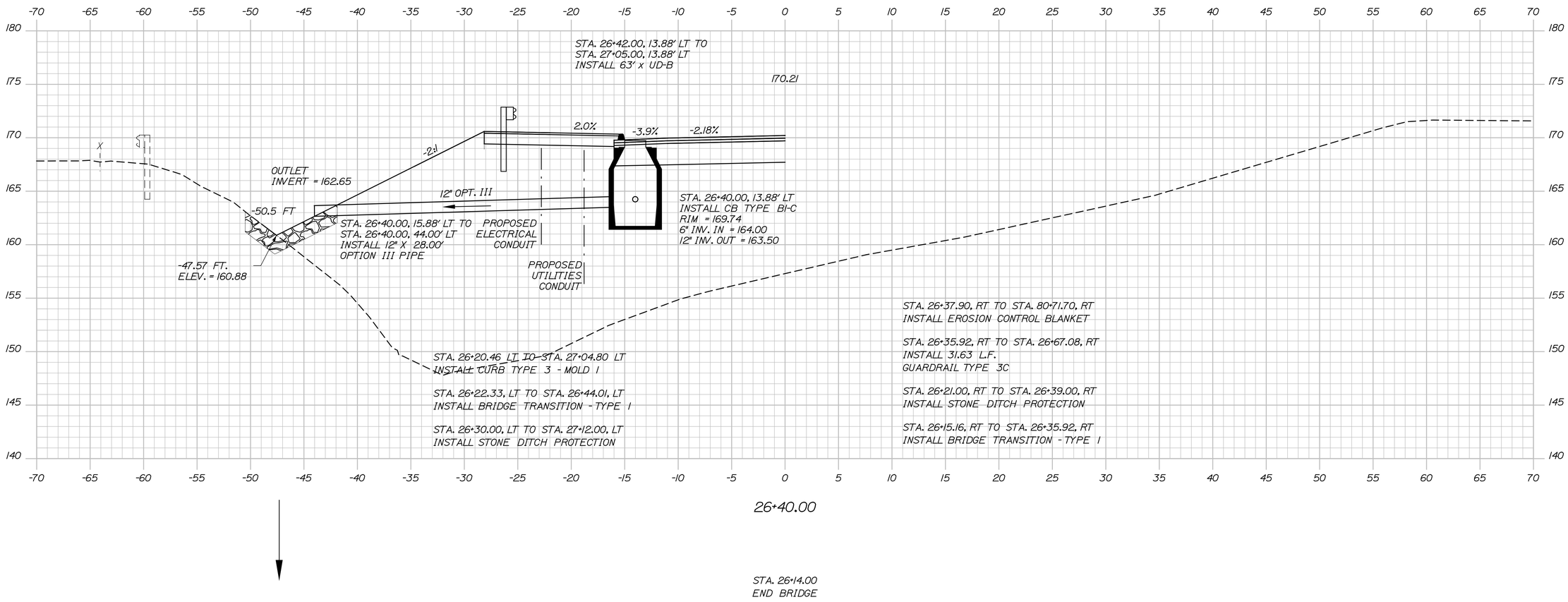

Sta. 26+40.00 to Sta. 26+40.00

Date:12/16/2014 Username: Division: Filename: ...\HIGHWAY\MSTA\XSections.dgn

TY-LIN INTERNATIONAL

STATE OF MAINE
DEPARTMENT OF TRANSPORTATION

BRIDGE NO. 2660 WIN 16705.00 BRIDGE PLANS

PROJ. MANAGER			
DESIGN-DETAILED			
CHECKED-REVIEWED			
DESIGN2-DETAILED2			
DESIGN3-DETAILED3			
REVISIONS 1			
REVISIONS 2			
REVISIONS 3			
REVISIONS 4			
FIELD CHANGES			

SIGNATURE
P.E. NUMBER
DATE

PENOBSCOT RIVER BRIDGE
PENOBSCOT RIVER
HOWLAND-ENFIELD PENOBSCOT COUNTY

CROSS SECTIONS
ROUTE 155/6

SHEET NUMBER
31
OF 127

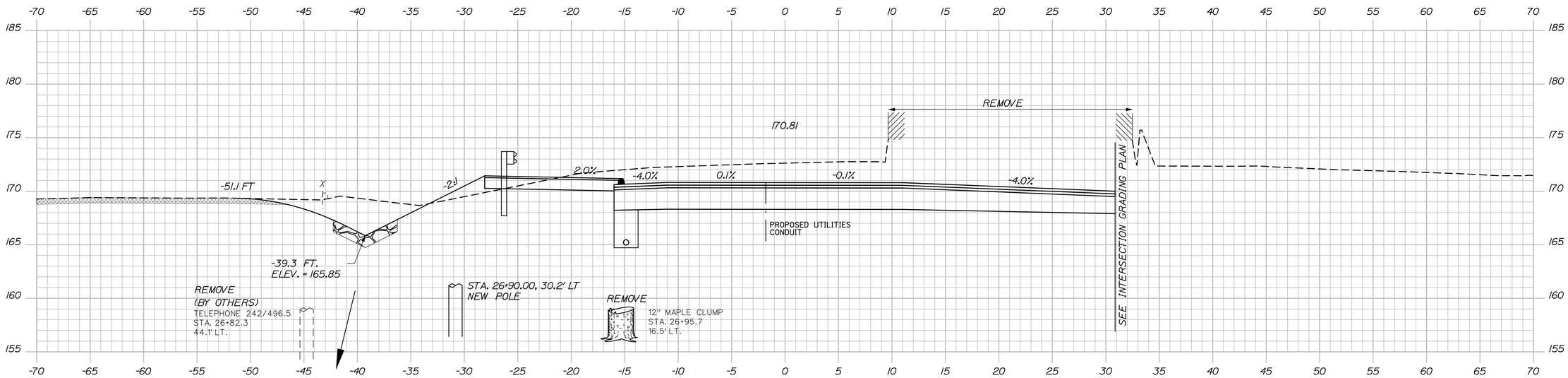

27+00.00

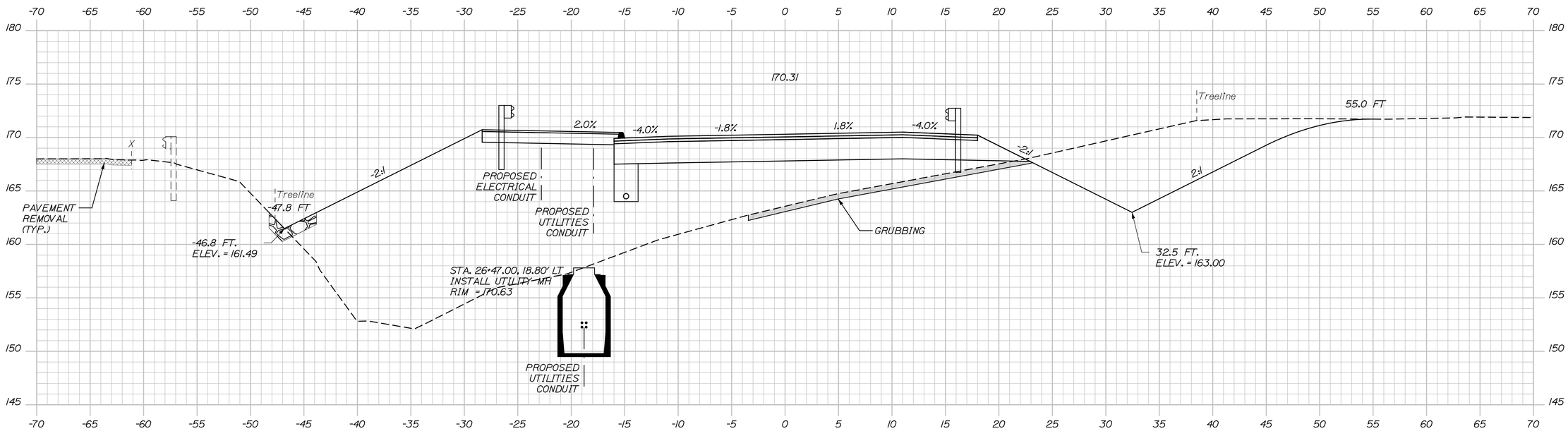

26+50.00

Sta. 26+50.00 to Sta. 27+00.00

Date:12/16/2014

Username:

Division:

Filename: ...\HIGHWAY\MSTA\XSections.dgn

TYLIN INTERNATIONAL

STATE OF MAINE
DEPARTMENT OF TRANSPORTATION

BRIDGE PLANS

WIN 16705.00

BRIDGE NO. 2660

PRO. MANAGER	N.B.	BY	DATE
DESIGN-DETAILED			
CHECKED-REVIEWED			
DESIGN2-DETAILED2			
DESIGN3-DETAILED3			
REVISIONS 1			
REVISIONS 2			
REVISIONS 3			
REVISIONS 4			
FIELD CHANGES			

SIGNATURE

P.E. NUMBER

DATE

PENOBSCOT RIVER BRIDGE
PENOBSCOT RIVER
HOWLAND-ENFIELD PENOBSCOT COUNTY

CROSS SECTIONS
ROUTE 155/6

SHEET NUMBER
32
OF 127

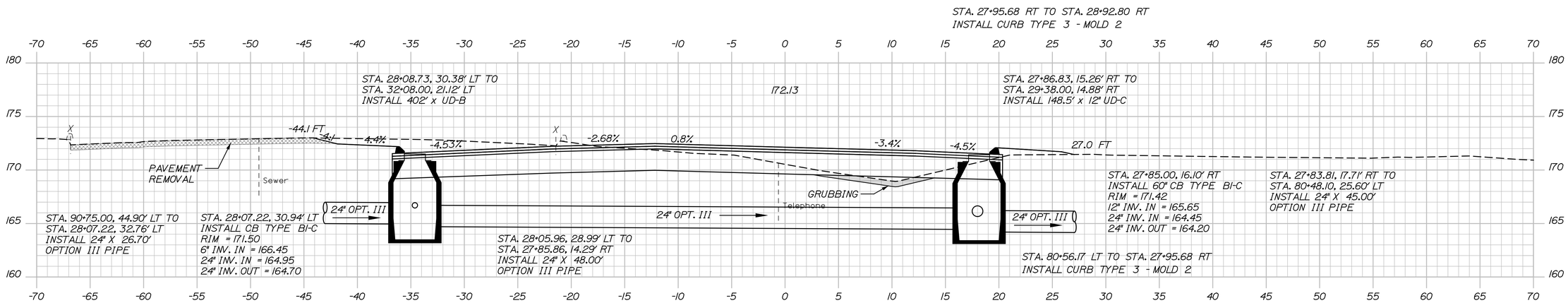

STA. 91+10.00 RT TO STA. 28+26.53 LT
INSTALL CURB TYPE 3 - MOLD 2

27+92.69, Skewed

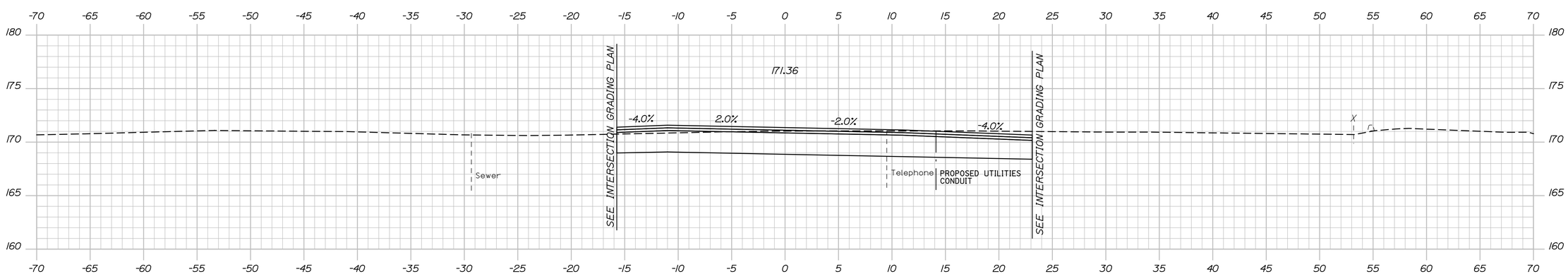

27+50.00

REMOVE
(BY OTHERS)
JOINT 26 METER/LIGHT
6/1 TELEPHONE PEDESTAL
STA. 27+26.9
6.6' LT.

REMOVE
(BY OTHERS)
JOINT 26 METER/LIGHT
STA. 27+26.0
3.9' LT.

T·Y·LIN INTERNATIONAL

STATE OF MAINE
DEPARTMENT OF TRANSPORTATION

BRIDGE NO. 2660

WIN
16705.00

BRIDGE PLANS

PROJ. MANAGER			
DESIGN-DETAILED			
CHECKED-REVIEWED			
DESIGN2-DETAILED2			
DESIGN3-DETAILED3			
REVISIONS 1			
REVISIONS 2			
REVISIONS 3			
REVISIONS 4			
FIELD CHANGES			

SIGNATURE
P.E. NUMBER
DATE

PENOBSCOT RIVER BRIDGE
PENOBSCOT RIVER
HOWLAND-ENFIELD PENOBSCOT COUNTY

CROSS SECTIONS
ROUTE 155/6

SHEET NUMBER
33
OF 127

Date:12/16/2014
Username:
Division:
Filename: ...\HIGHWAY\MSTA\XSections.dgn
Sta. 27+50.00 to Sta. 27+92.69

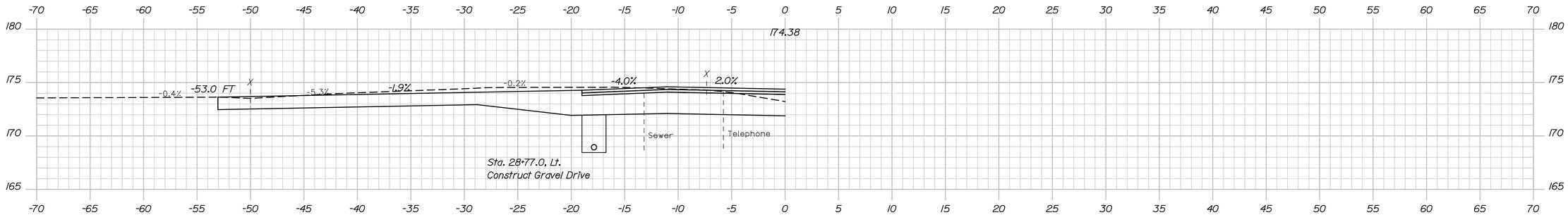

28+77.00, Drive

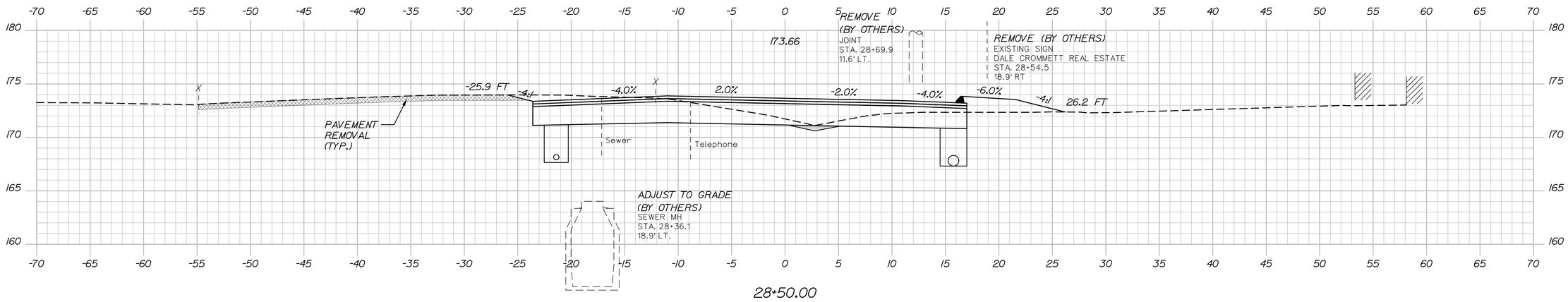

28+50.00

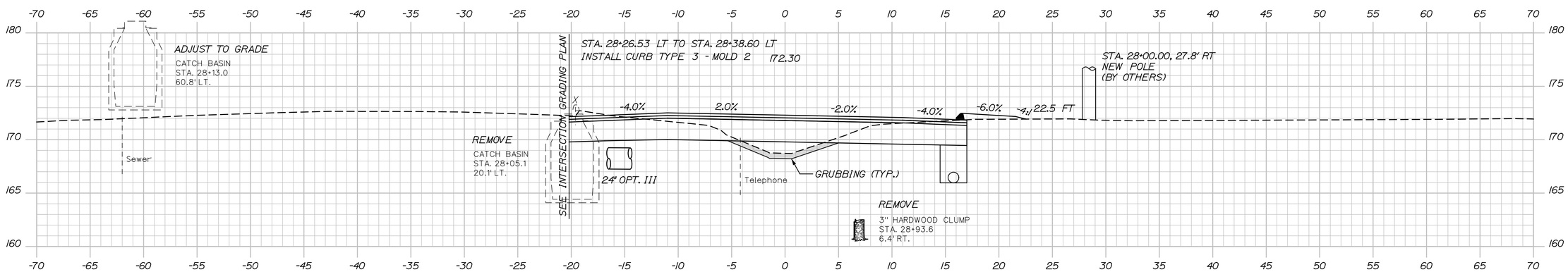

28+00.00

Sta. 28+00.00 to Sta. 28+77.00

Filename: ...\HIGHWAY\MSTA\XSections.dgn Division: Username: Date:12/16/2014

STATE OF MAINE
DEPARTMENT OF TRANSPORTATION

BRIDGE PLANS

WIN 16705.00

BRIDGE NO. 2660

	BY	DATE
PROJ. MANAGER		
DESIGN-DETAILED		
CHECKED-REVIEWED		
DESIGN2-DETAILED2		
DESIGN3-DETAILED3		
REVISIONS 1		
REVISIONS 2		
REVISIONS 3		
REVISIONS 4		
FIELD CHANGES		

N.B.

SIGNATURE

P.E. NUMBER

DATE

PENOBSCOT RIVER BRIDGE
PENOBSCOT RIVER
HOWLAND-ENFIELD PENOBSCOT COUNTY

CROSS SECTIONS
ROUTE 155/6

T·Y·LIN INTERNATIONAL

SHEET NUMBER
34
OF 127

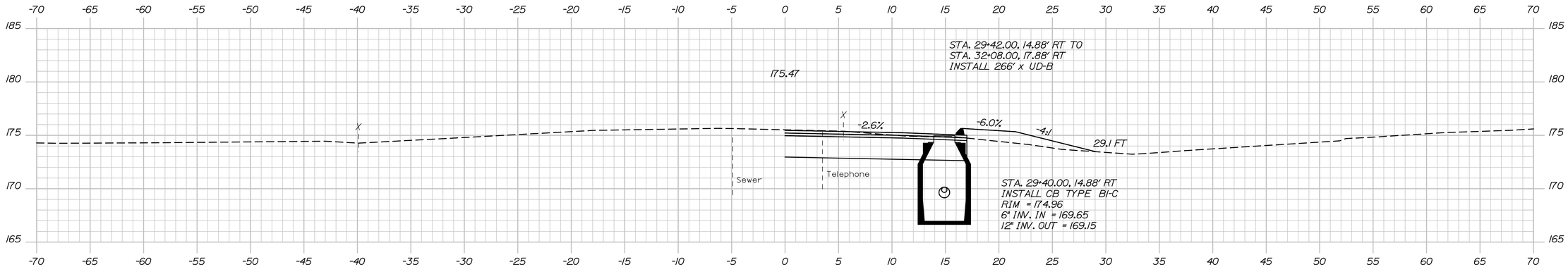

29+40.00

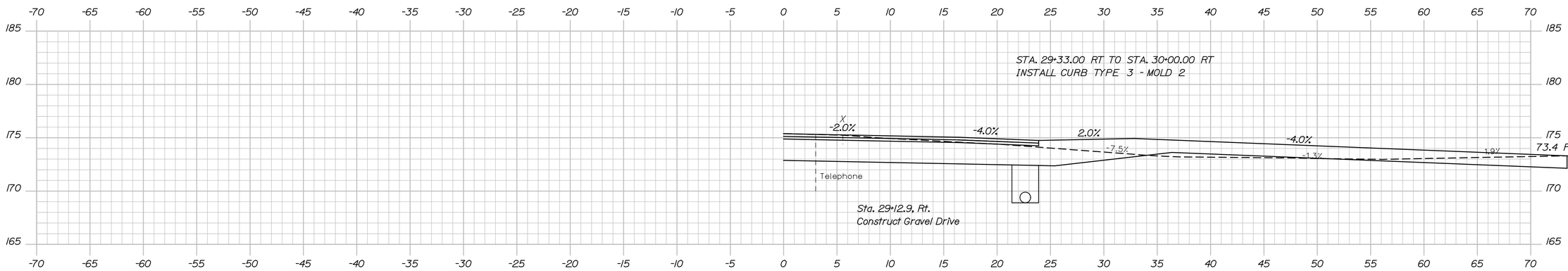

29+32.00, Drive (Skewed Back, Rt.)

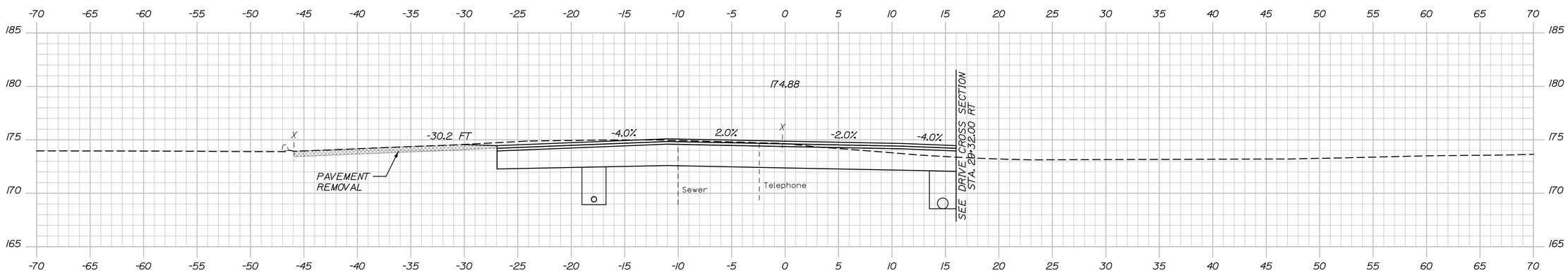

29+00.00

Sta. 29+00.00 to Sta. 29+40.00

Filename: ...\HIGHWAY\MSTA\XSections.dgn Division: Username: Date:12/16/2014

STATE OF MAINE
DEPARTMENT OF TRANSPORTATION

BRIDGE PLANS

WIN 16705.00

BRIDGE NO. 2660

		BY	DATE
PROJ. MANAGER			
DESIGN-DETAILED			
CHECKED-REVIEWED			
DESIGN2-DETAILED2			
DESIGN3-DETAILED3			
REVISIONS 1			
REVISIONS 2			
REVISIONS 3			
REVISIONS 4			
FIELD CHANGES			

SIGNATURE

P.E. NUMBER

DATE

PENOBSCOT RIVER BRIDGE
PENOBSCOT RIVER
HOWLAND-ENFIELD PENOBSCOT COUNTY

CROSS SECTIONS
ROUTE 155/6

SHEET NUMBER
35
OF 127

T·Y·LIN INTERNATIONAL

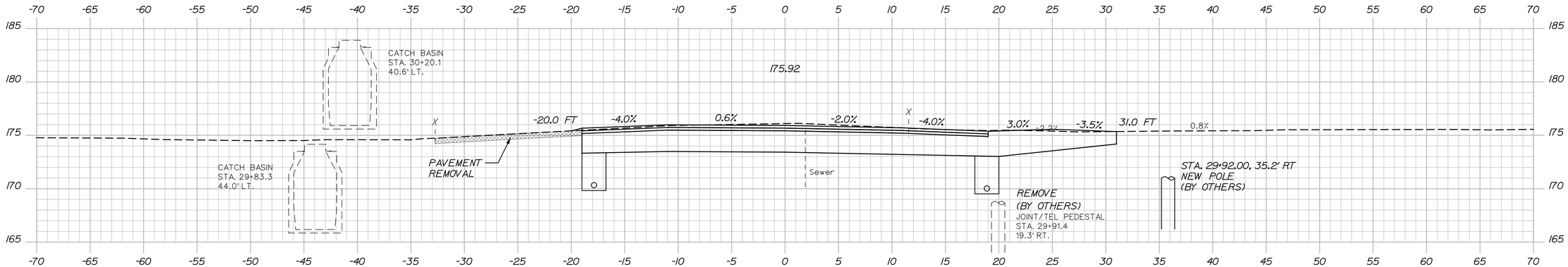

30+00.00

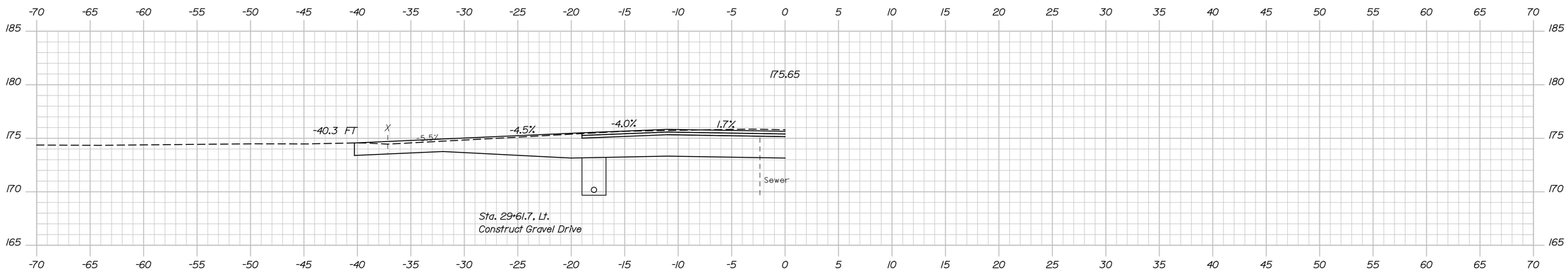

29+62.00, Drive

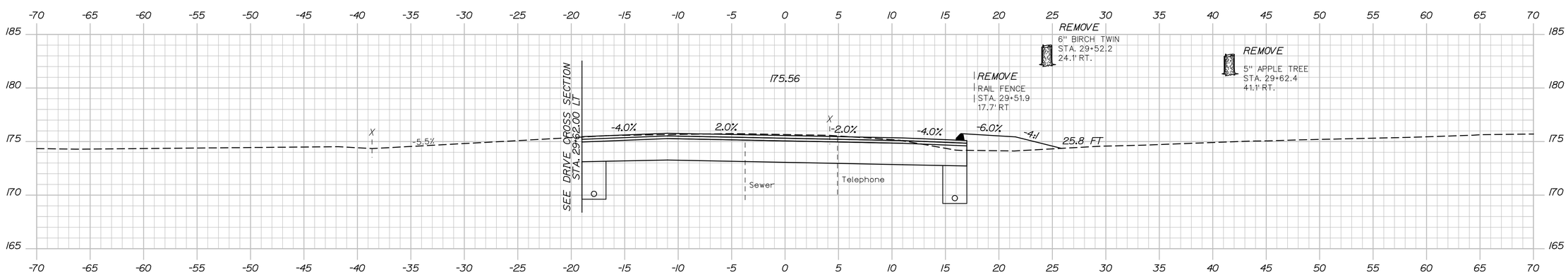

29+50.00

Sta. 29+50.00 to Sta. 30+00.00

Filename: ...\HIGHWAY\MSTA\XSections.dgn Division: Username: Date:12/16/2014

STATE OF MAINE
DEPARTMENT OF TRANSPORTATION

BRIDGE PLANS

WIN 16705.00

BRIDGE NO. 2660

		BY	DATE
PROJ. MANAGER			
DESIGN-DETAILED			
CHECKED-REVIEWED			
DESIGN2-DETAILED2			
DESIGN3-DETAILED3			
REVISIONS 1			
REVISIONS 2			
REVISIONS 3			
REVISIONS 4			
FIELD CHANGES			

SIGNATURE

P.E. NUMBER

DATE

PENOBSCOT RIVER BRIDGE
PENOBSCOT RIVER
HOWLAND-ENFIELD PENOBSCOT COUNTY

CROSS SECTIONS
ROUTE 155/6

SHEET NUMBER
36
OF 127

TY-LIN INTERNATIONAL

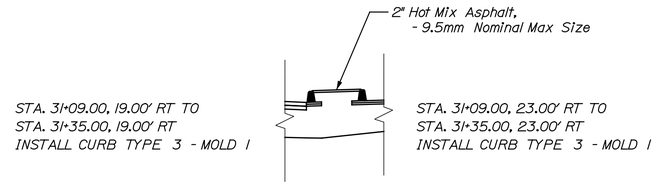

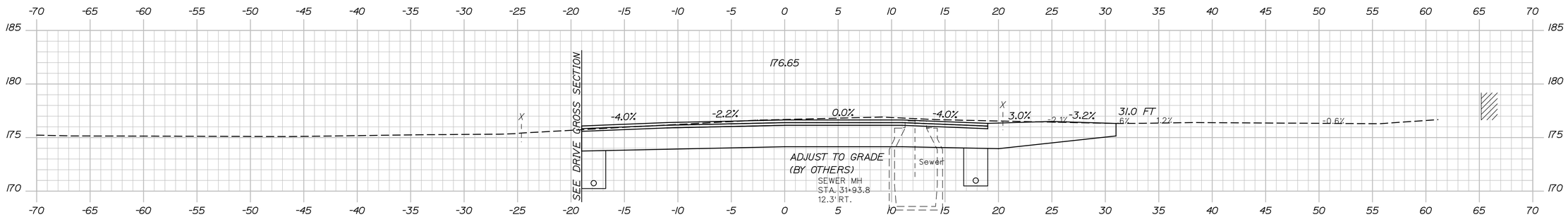

31+00.00

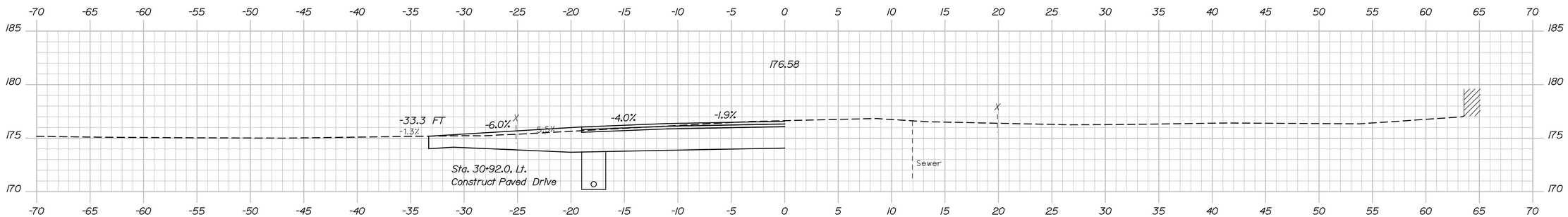

30+92.00, Drive

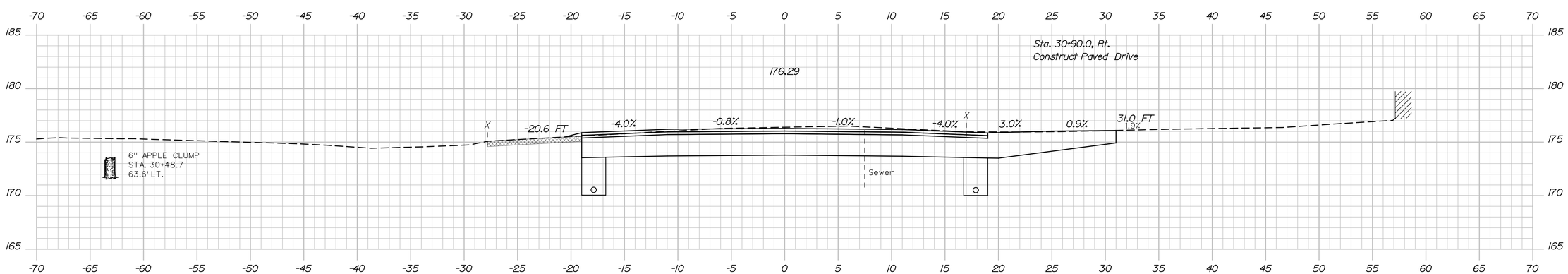

30+50.00

Sta. 30+50.00 to Sta. 31+00.00

Filename: ...\HIGHWAY\MSTA\XSections.dgn Division: Username: Date:12/16/2014

T·Y·LIN INTERNATIONAL

STATE OF MAINE
DEPARTMENT OF TRANSPORTATION

BRIDGE PLANS

WIN 16705.00

BRIDGE NO. 2660

PROJ. MANAGER	N.B.	BY	DATE
DESIGN-DETAILED			
CHECKED-REVIEWED			
DESIGN2-DETAILED2			
DESIGN3-DETAILED3			
REVISIONS 1			
REVISIONS 2			
REVISIONS 3			
REVISIONS 4			
FIELD CHANGES			

SIGNATURE

P.E. NUMBER

DATE

PENOBSCOT RIVER BRIDGE
PENOBSCOT RIVER
HOWLAND-ENFIELD PENOBSCOT COUNTY

CROSS SECTIONS
ROUTE 155/6

SHEET NUMBER
37
OF 127

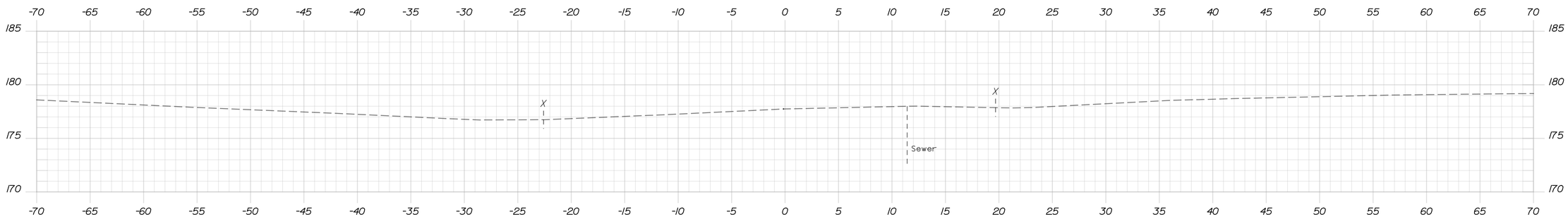

32+50.00

STA. 32+08.00
END PROJECT
BH-1670(500)X

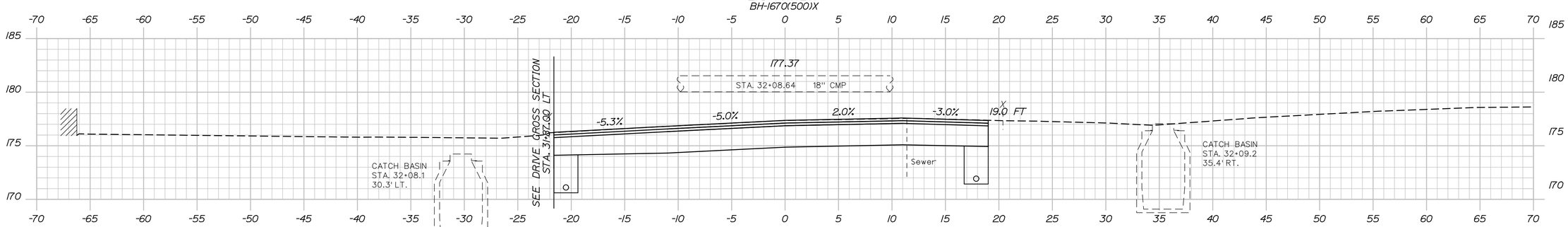

32+00.00

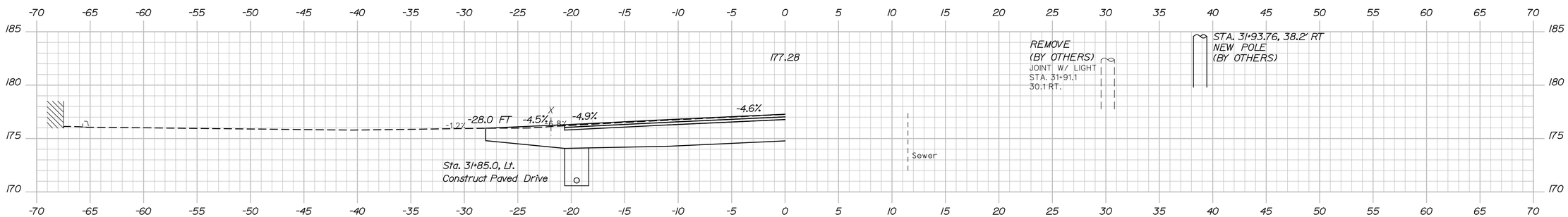

31+85.00, Drive

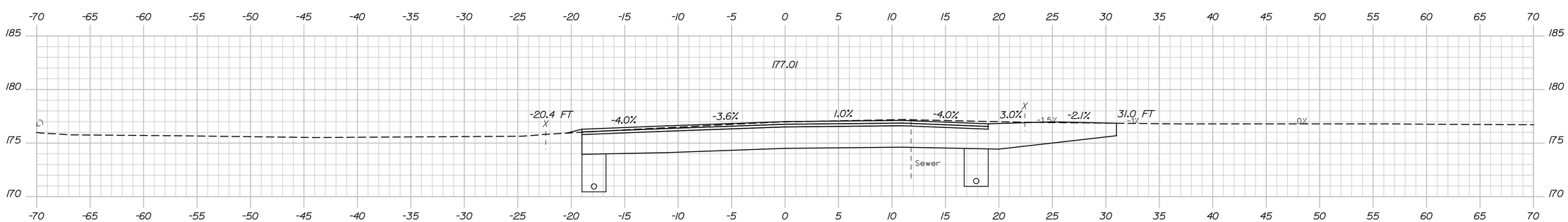

31+50.00

Sta. 31+50.00 to Sta. 32+00.00

Filename: ...\HIGHWAY\MSTA\XSections.dgn Division: Username: Date:12/16/2014

T·Y·LIN INTERNATIONAL

STATE OF MAINE
DEPARTMENT OF TRANSPORTATION

BRIDGE PLANS

WIN 16705.00

BRIDGE NO. 2660

PROJ. MANAGER			
DESIGN-DETAILED	N.B.	BY	DATE
CHECKED-REVIEWED			
DESIGN2-DETAILED2			
DESIGN3-DETAILED3			
REVISIONS 1			
REVISIONS 2			
REVISIONS 3			
REVISIONS 4			
FIELD CHANGES			

SIGNATURE

P.E. NUMBER

DATE

PENOBSCOT RIVER BRIDGE
PENOBSCOT RIVER
HOWLAND-ENFIELD PENOBSCOT COUNTY

CROSS SECTIONS
ROUTE 155/6

SHEET NUMBER
38
OF 127

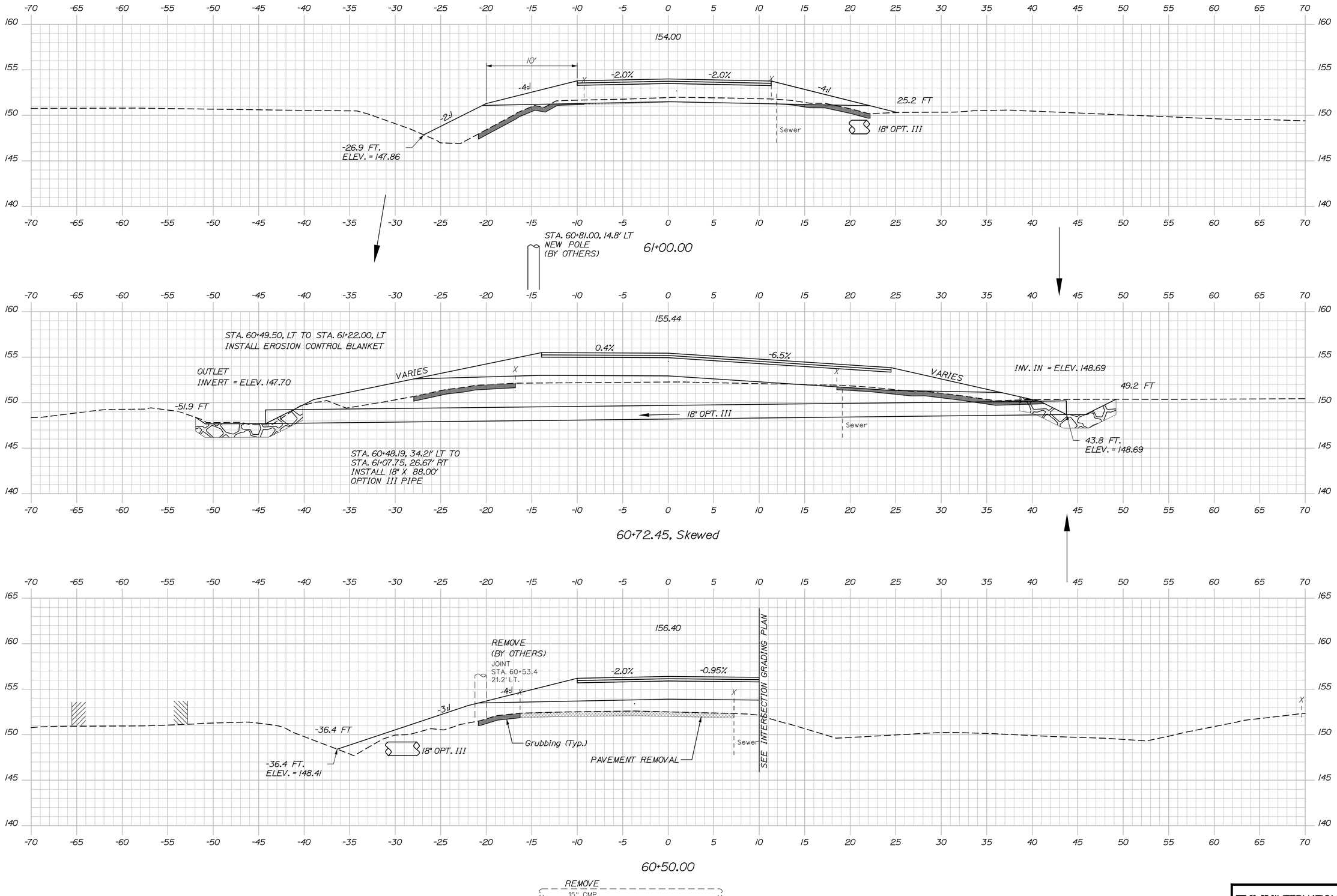

Sta. 60+50.00 to Sta. 61+00.00

Filename: ...\HIGHWAY\MSTA\XSections.dgn Division: Username: Date:12/16/2014

STATE OF MAINE
DEPARTMENT OF TRANSPORTATION

BRIDGE PLANS

WIN 16705.00

BRIDGE NO. 2660

PROJ. MANAGER	N.B.	BY	DATE
DESIGN-DETAILED			
CHECKED-REVIEWED			
DESIGN2-DETAILED2			
DESIGN3-DETAILED3			
REVISIONS 1			
REVISIONS 2			
REVISIONS 3			
REVISIONS 4			
FIELD CHANGES			

SIGNATURE

P.E. NUMBER

DATE

PENOBSCOT RIVER BRIDGE
PENOBSCOT RIVER
HOWLAND-ENFIELD PENOBSCOT COUNTY

CROSS SECTIONS
TERRIO STREET

SHEET NUMBER
39
OF 127

TYLIN INTERNATIONAL

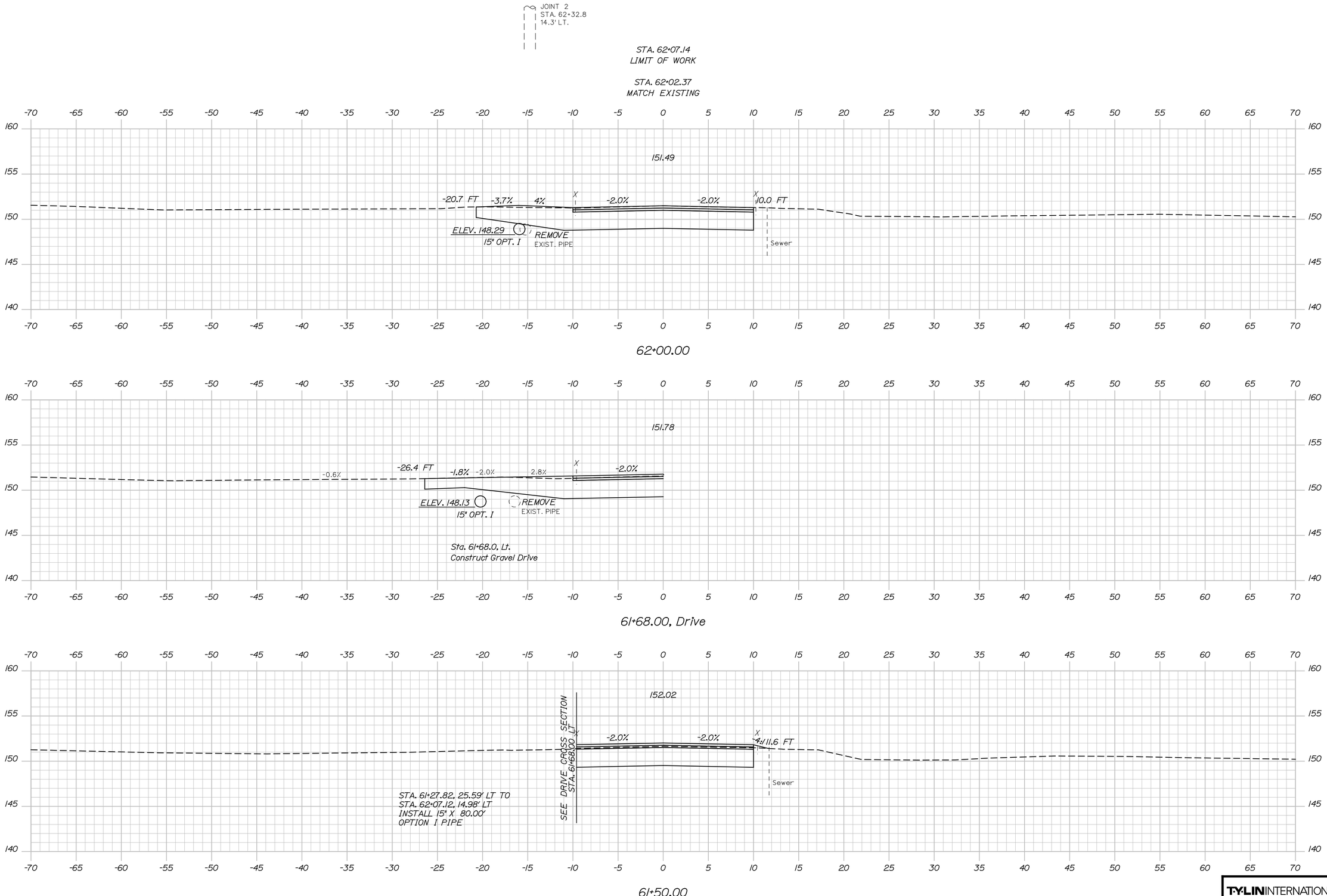

Sta. 61+50.00 to Sta. 62+00.00

Filename: ...\HIGHWAY\MSTA\XSections.dgn Division: Username: Date:12/16/2014

STATE OF MAINE
DEPARTMENT OF TRANSPORTATION

BRIDGE PLANS

WIN 16705.00

BRIDGE NO. 2660

PROJ. MANAGER			
DESIGN-DETAILED	N.B.	BY	DATE
CHECKED-REVIEWED			
DESIGN2-DETAILED2			
DESIGN3-DETAILED3			
REVISIONS 1			
REVISIONS 2			
REVISIONS 3			
REVISIONS 4			
FIELD CHANGES			

SIGNATURE

P.E. NUMBER

DATE

PENOBSCOT RIVER BRIDGE
PENOBSCOT RIVER
HOWLAND-ENFIELD PENOBSCOT COUNTY

CROSS SECTIONS
TERRIO STREET

T·Y·LIN INTERNATIONAL

SHEET NUMBER

40

OF 127

Date:12/16/2014

Username:

Division:

Filename: ...\HIGHWAY\MSTA\XSections.dgn

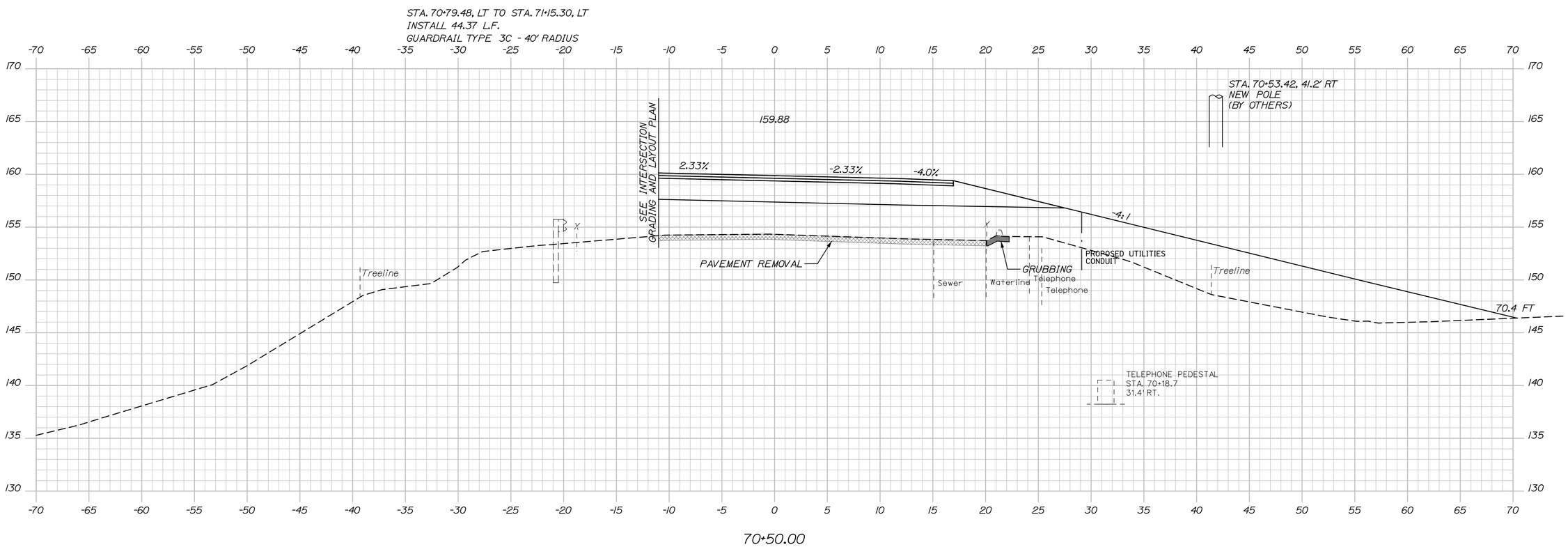

Sta. 70+50.00 to Sta. 70+50.00

T·Y·LIN INTERNATIONAL

STATE OF MAINE
DEPARTMENT OF TRANSPORTATION

BRIDGE NO. 2660

WIN
16705.00

BRIDGE PLANS

PROJ. MANAGER	N.B	BY	DATE
DESIGN-DETAILED			
CHECKED-REVIEWED			
DESIGN2-DETAILED2			
DESIGN3-DETAILED3			
REVISIONS 1			
REVISIONS 2			
REVISIONS 3			
REVISIONS 4			
FIELD CHANGES			

SIGNATURE

P.E. NUMBER

DATE

PENOBSCOT RIVER BRIDGE
PENOBSCOT RIVER
HOWLAND-ENFIELD PENOBSCOT COUNTY

CROSS SECTIONS
ROUTE 116

SHEET NUMBER

41

OF 127

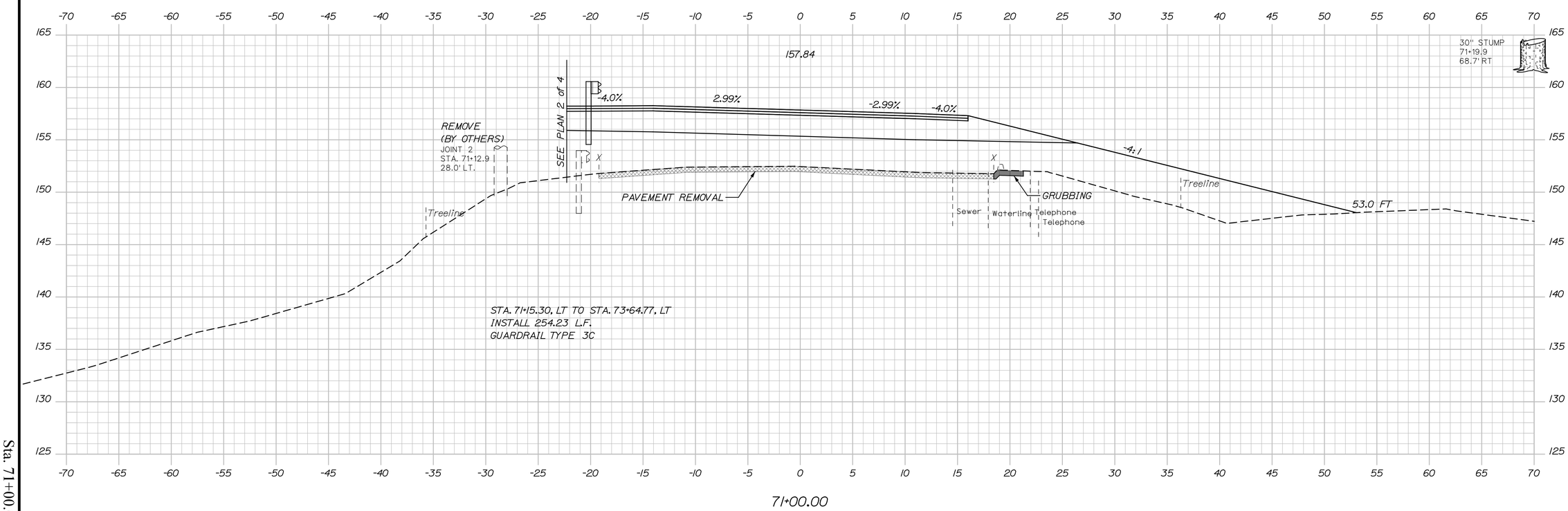

Sta. 71+00.00 to Sta. 71+00.00

Filename: ...\HIGHWAY\MSTA\XSections.dgn Division: Username: Date:12/16/2014

STATE OF MAINE
DEPARTMENT OF TRANSPORTATION

BRIDGE NO. 2660 WIN 16705.00 BRIDGE PLANS

PROJ. MANAGER	N.B.	BY	DATE
DESIGN-DETAILED			
CHECKED-REVIEWED			
DESIGN2-DETAILED2			
DESIGN3-DETAILED3			
REVISIONS 1			
REVISIONS 2			
REVISIONS 3			
REVISIONS 4			
FIELD CHANGES			

SIGNATURE

P.E. NUMBER

DATE

PENOBSCOT RIVER BRIDGE
PENOBSCOT RIVER
HOWLAND-ENFIELD PENOBSCOT COUNTY

CROSS SECTIONS
ROUTE 116

SHEET NUMBER
42
OF 127

T·Y·LIN INTERNATIONAL

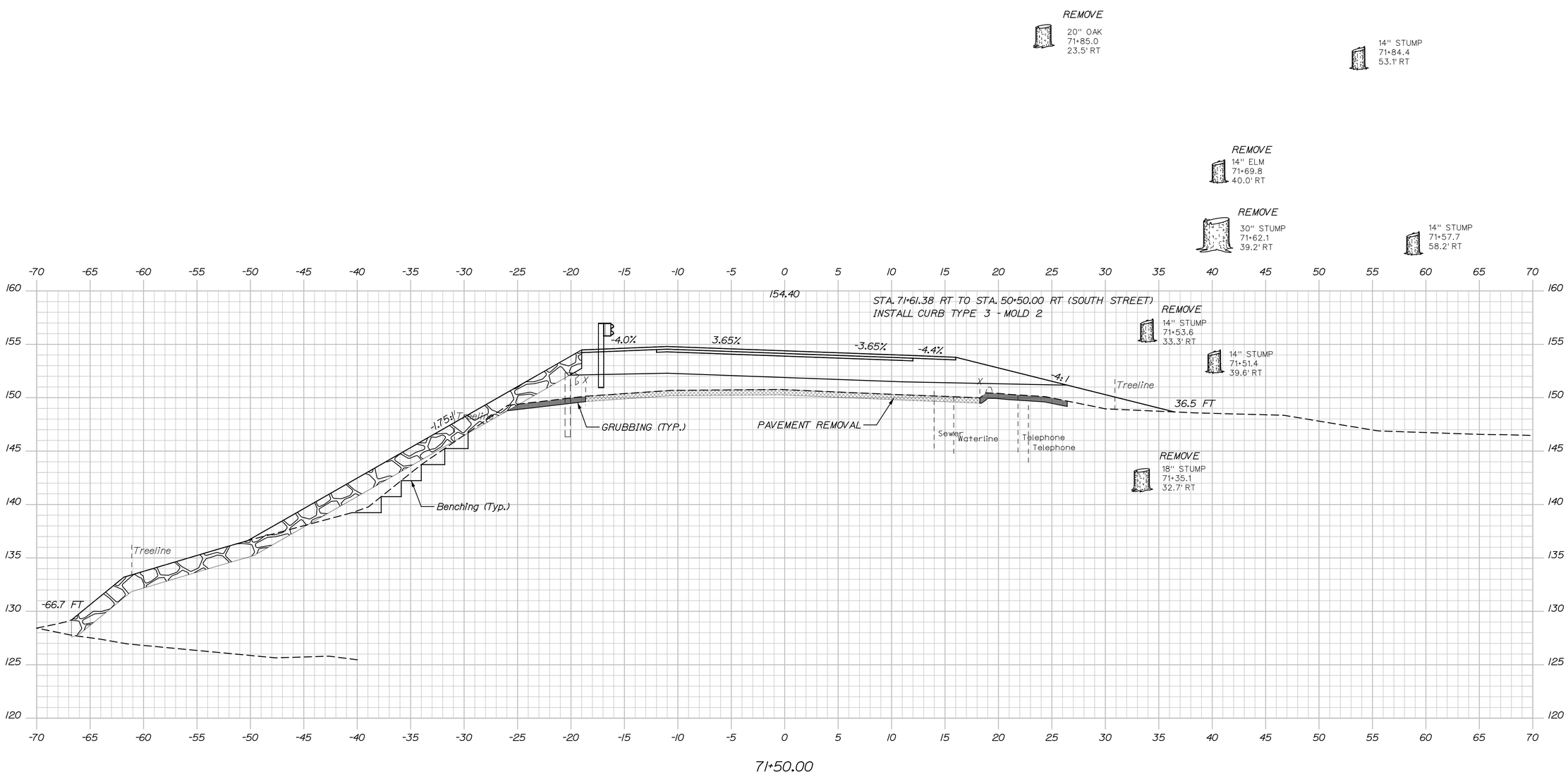

Sta. 71+50.00 to Sta. 71+50.00

Filename: ...\HIGHWAY\MSTA\XSections.dgn Division: Username: Date:12/16/2014

STATE OF MAINE
DEPARTMENT OF TRANSPORTATION

BRIDGE NO. 2660 WIN 16705.00 BRIDGE PLANS

PROJ. MANAGER			
DESIGN-DETAILED			
CHECKED-REVIEWED			
DESIGN2-DETAILED2			
DESIGN3-DETAILED3			
REVISIONS 1			
REVISIONS 2			
REVISIONS 3			
REVISIONS 4			
FIELD CHANGES			

N.B. BY DATE

SIGNATURE

P.E. NUMBER

DATE

PENOBSCOT RIVER BRIDGE
PENOBSCOT RIVER
HOWLAND-ENFIELD PENOBSCOT COUNTY

CROSS SECTIONS
ROUTE 116

SHEET NUMBER
43
OF 127

T·Y·LIN INTERNATIONAL

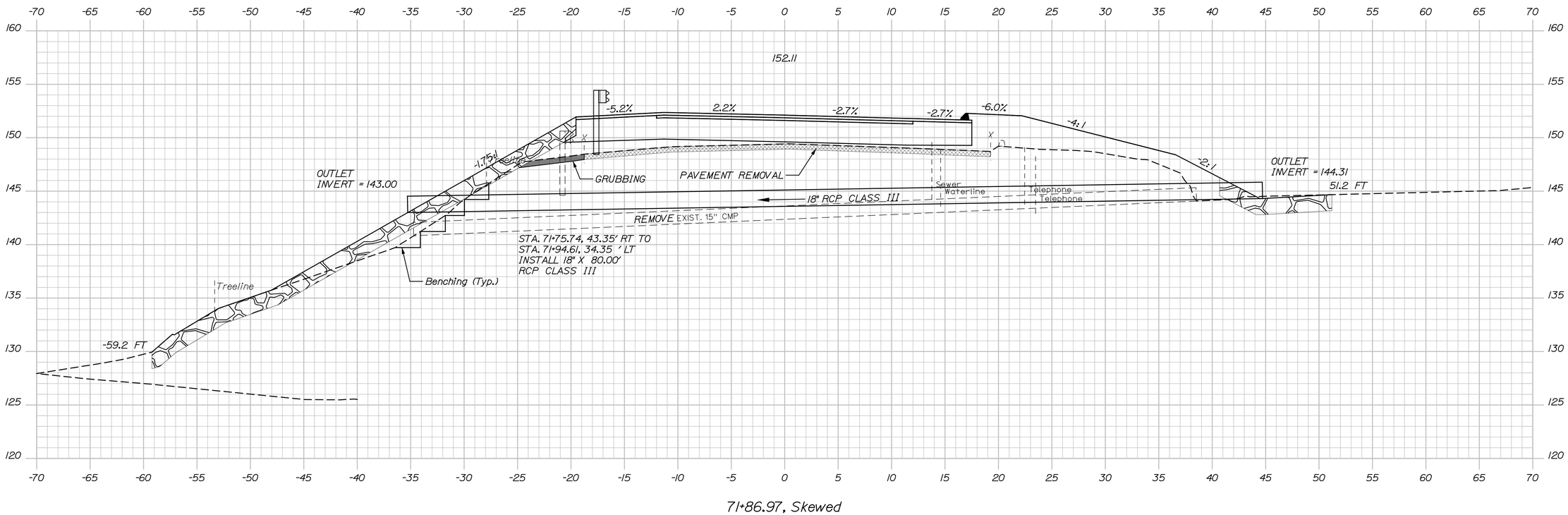

STATE OF MAINE
DEPARTMENT OF TRANSPORTATION

BRIDGE NO. 2660

WIN
16705.00

BRIDGE PLANS

PROJ. MANAGER	N.B	BY	DATE
DESIGN-DETAILED			.
CHECKED-REVIEWED			.
DESIGN2-DETAILED2			
DESIGN3-DETAILED3			
REVISIONS 1			
REVISIONS 2			
REVISIONS 3			
REVISIONS 4			
FIELD CHANGES			

SIGNATURE

P.E. NUMBER

DATE

PENOBSCOT RIVER BRIDGE
PENOBSCOT RIVER
HOWLAND-ENFIELD PENOBSCOT COUNTY

CROSS SECTIONS
ROUTE 116

SHEET NUMBER

44

OF 127

T·Y·LIN INTERNATIONAL

Filename: ...\HIGHWAY\MSTA\XSections.dgn Division: Username: Date:12/16/2014

Filename: ...\HIGHWAY\MSTA\XSections.dgn Division: Username: Date:12/16/2014

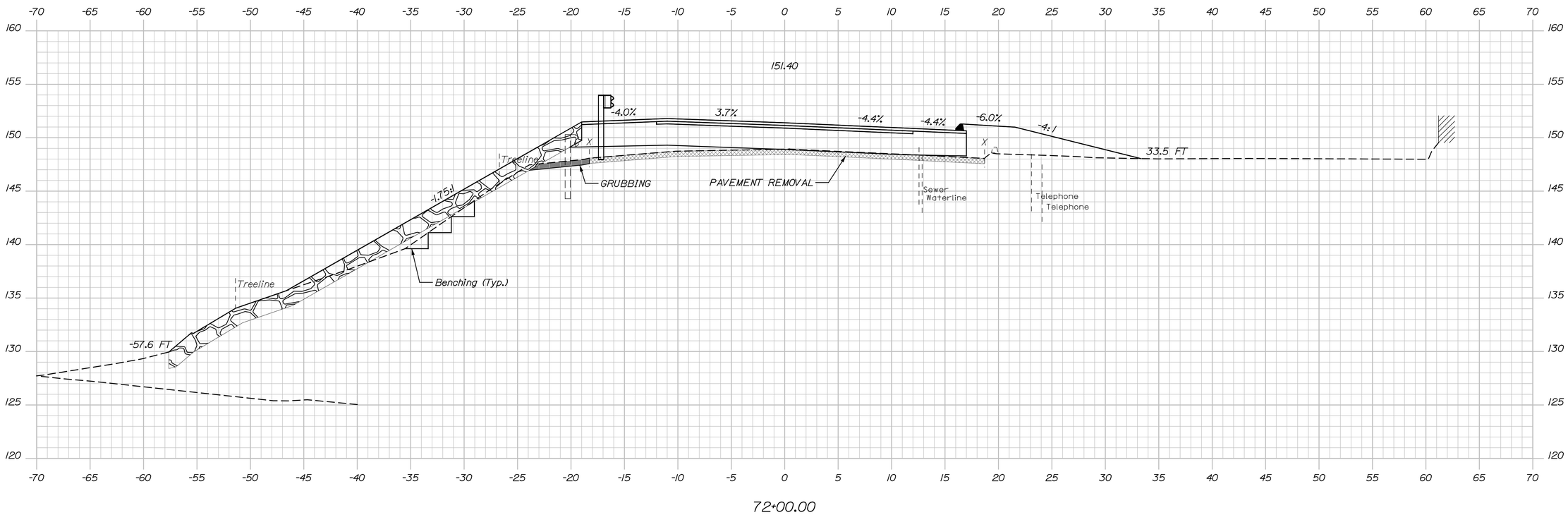

Sta. 72+00.00 to Sta. 72+00.00

STATE OF MAINE
DEPARTMENT OF TRANSPORTATION

BRIDGE PLANS

WIN 16705.00

BRIDGE NO. 2660

PROJ. MANAGER	N.B.	BY	DATE
DESIGN-DETAILED			
CHECKED-REVIEWED			
DESIGN2-DETAILED2			
DESIGN3-DETAILED3			
REVISIONS 1			
REVISIONS 2			
REVISIONS 3			
REVISIONS 4			
FIELD CHANGES			

SIGNATURE

P.E. NUMBER

DATE

PENOBSCOT RIVER BRIDGE
PENOBSCOT RIVER
HOWLAND-ENFIELD PENOBSCOT COUNTY

CROSS SECTIONS
ROUTE 116

T·Y·LIN INTERNATIONAL

SHEET NUMBER

45

OF 127

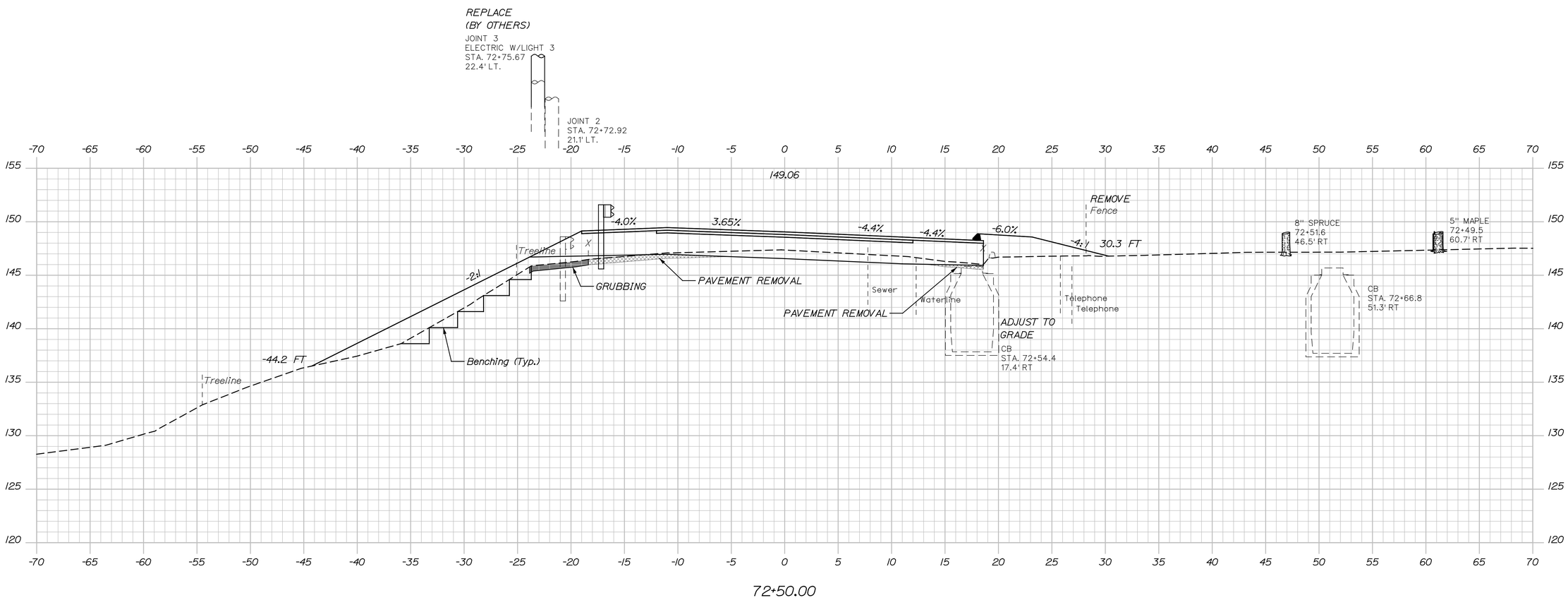

Sta. 72+50.00 to Sta. 72+79.00

Filename: ...\HIGHWAY\MSTA\XSections.dgn Division: Username: Date:12/16/2014

STATE OF MAINE
DEPARTMENT OF TRANSPORTATION

BRIDGE NO. 2660 WIN 16705.00 BRIDGE PLANS

PROJ. MANAGER			
DESIGN-DETAILED			
CHECKED-REVIEWED			
DESIGN2-DETAILED2			
DESIGN3-DETAILED3			
REVISIONS 1			
REVISIONS 2			
REVISIONS 3			
REVISIONS 4			
FIELD CHANGES			

SIGNATURE

P.E. NUMBER

DATE

PENOBSCOT RIVER BRIDGE
PENOBSCOT RIVER
HOWLAND-ENFIELD PENOBSCOT COUNTY

CROSS SECTIONS
ROUTE 116

SHEET NUMBER
46
OF 127

TYLIN INTERNATIONAL

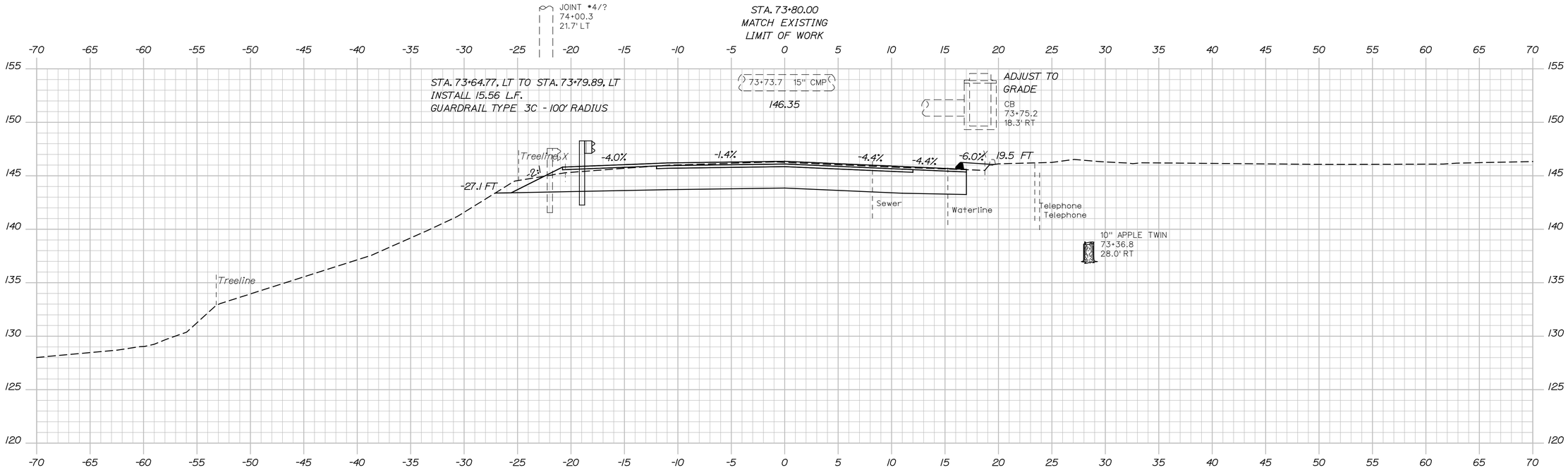

73+50.00

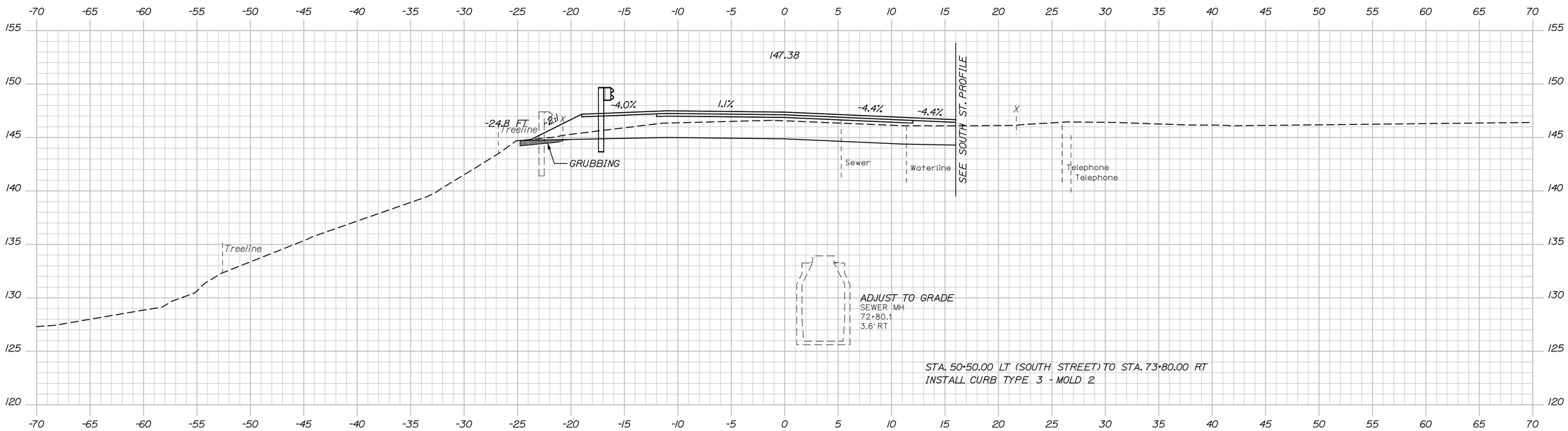

73+00.00

ADJUST TO GRADE
WATER GATE
72+98.6
11.4' RT

ADJUST TO GRADE
WATER GATE
72+93.3
11.4' RT

TYLIN INTERNATIONAL

STATE OF MAINE
DEPARTMENT OF TRANSPORTATION

BRIDGE PLANS

WIN 16705.00

BRIDGE NO. 2660

PROJ. MANAGER		
DESIGN-DETAILED		
CHECKED-REVIEWED		
DESIGN2-DETAILED2		
DESIGN3-DETAILED3		
REVISIONS 1		
REVISIONS 2		
REVISIONS 3		
REVISIONS 4		
FIELD CHANGES		

N.B	BY	DATE

SIGNATURE

P.E. NUMBER

DATE

PENOBSCOT RIVER BRIDGE
PENOBSCOT RIVER
HOWLAND-ENFIELD PENOBSCOT COUNTY

CROSS SECTIONS
ROUTE 116

SHEET NUMBER
47
OF 127

Date:12/16/2014

Username:

Division:

Filename: ...\HIGHWAY\MSTA\XSections.dgn

Sta. 73+00.00 to Sta. 73+50.00

STA. 80+79.15 LT TO STA. 80+90.00 LT
INSTALL CURB TYPE 3 - MOLD 2

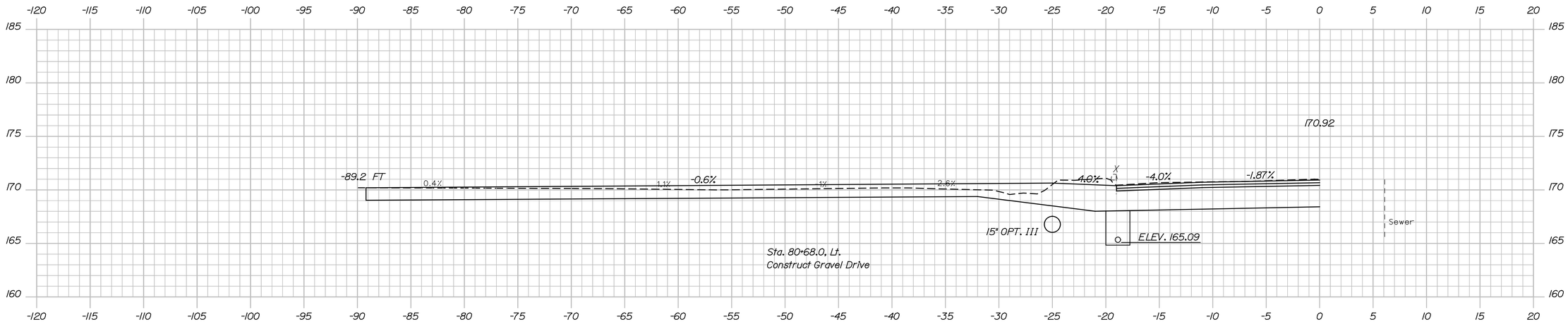

STA. 80+56.17 LT TO STA. 27+95.68 RT
INSTALL CURB TYPE 3 - MOLD 2

80+67.66, Drive

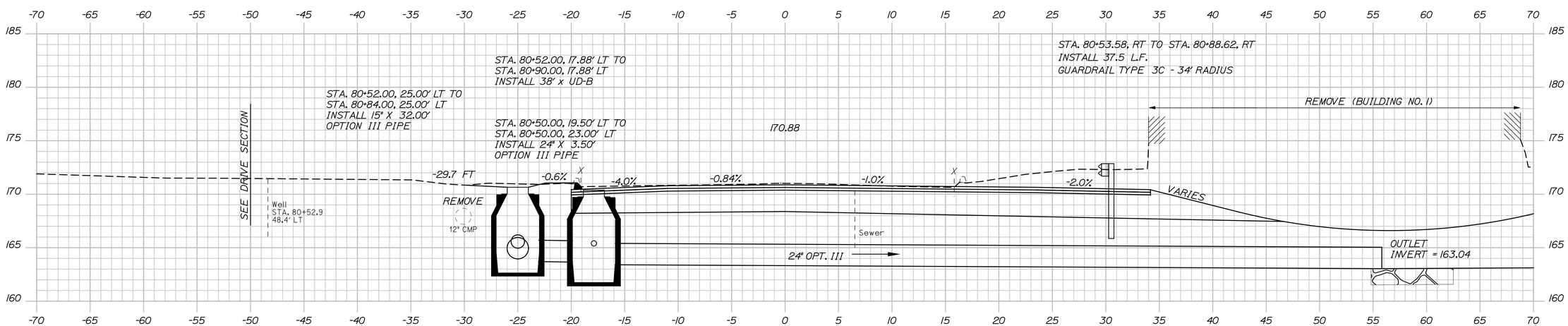

STA. 80+50.00, 25.00' LT
INSTALL CB TYPE BI
RIM = 170.65
15" INV. IN = 164.95
24" INV. IN = 163.95
24" INV. OUT = 163.70

STA. 80+50.00, 17.88' LT
INSTALL CB TYPE BI-C
RIM = 170.38
6" INV. IN = 165.15
6" INV. IN = 165.15
24" INV. IN = 163.65
24" INV. OUT = 163.40

80+50.00

STA. 80+50.00, 15.88' LT TO
STA. 80+56.69, 55.81' RT
INSTALL 24" X 72.00'
OPTION III PIPE

STA. 80+05.50, 36.24' LT TO
STA. 80+48.00, 17.88' LT
INSTALL 48' x UD-B
(PROVIDE 0.50% SLOPE MIN.
FOR POSITIVE DRAINAGE)

T·Y·LIN INTERNATIONAL

STATE OF MAINE
DEPARTMENT OF TRANSPORTATION

BRIDGE PLANS

WIN 16705.00

BRIDGE NO. 2660

PROJ. MANAGER			
DESIGN-DETAILED			
CHECKED-REVIEWED			
DESIGN2-DETAILED2			
DESIGN3-DETAILED3			
REVISIONS 1			
REVISIONS 2			
REVISIONS 3			
REVISIONS 4			
FIELD CHANGES			

SIGNATURE
P.E. NUMBER
DATE

PENOBSCOT RIVER BRIDGE
PENOBSCOT RIVER
HOWLAND-ENFIELD PENOBSCOT COUNTY

CROSS SECTIONS
OLD COUNTY ROAD (SOUTH)

SHEET NUMBER
48
OF 127

Date:12/16/2014
Username:
Division:
Filename: ...\HIGHWAY\MSTA\XSections.dgn
Sta. 80+50.00 to Sta. 80+67.66

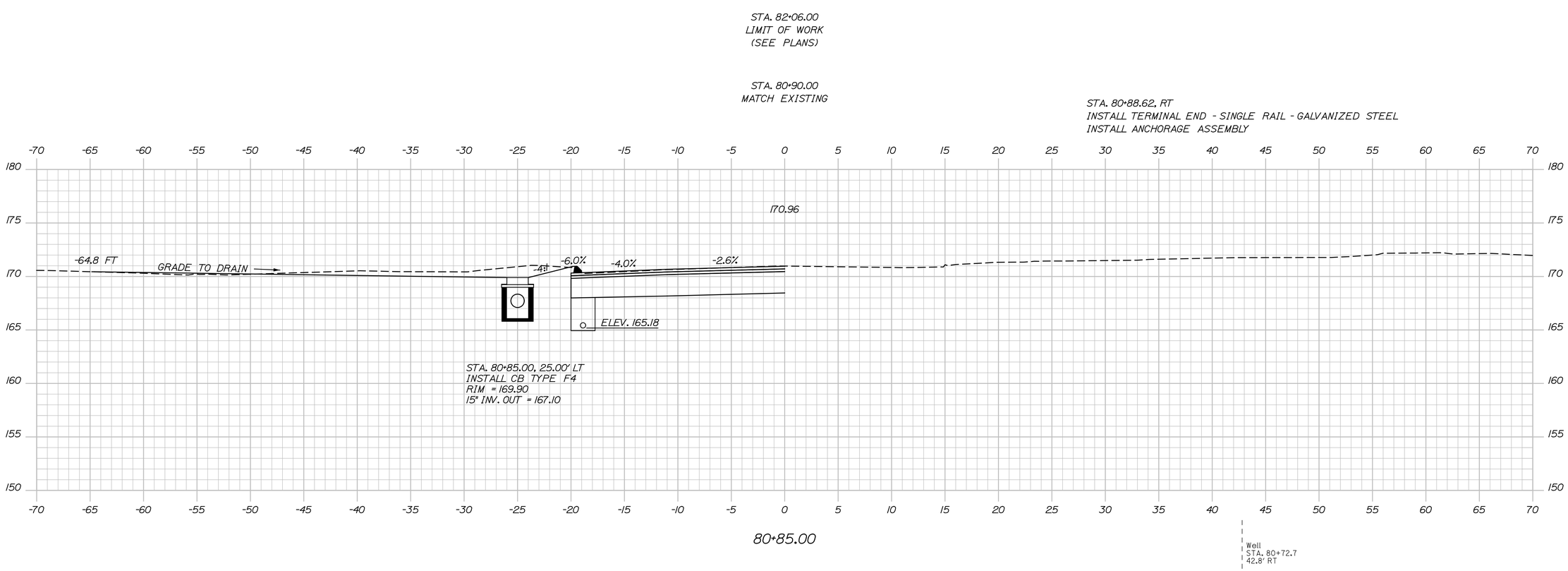

Sta. 80+85.00 to Sta. 80+85.00

Filename: ...\HIGHWAY\MSTA\XSections.dgn Division: Username: Date:12/16/2014

STATE OF MAINE
DEPARTMENT OF TRANSPORTATION

BRIDGE NO. 2660 WIN 16705.00 BRIDGE PLANS

PROJ. MANAGER	N.B.	BY	DATE
DESIGN-DETAILED			.
CHECKED-REVIEWED			.
DESIGN2-DETAILED2			
DESIGN3-DETAILED3			
REVISIONS 1			
REVISIONS 2			
REVISIONS 3			
REVISIONS 4			
FIELD CHANGES			

SIGNATURE

P.E. NUMBER

DATE

PENOBSCOT RIVER BRIDGE
PENOBSCOT RIVER
HOWLAND-ENFIELD PENOBSCOT COUNTY

CROSS SECTIONS
OLD COUNTY ROAD (SOUTH)

SHEET NUMBER
49
OF 127

T·Y·LIN INTERNATIONAL

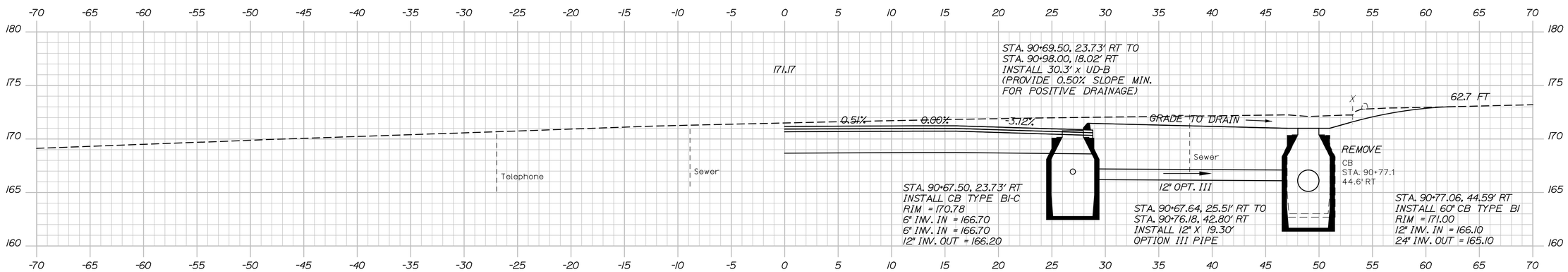

90+56.62, Skewed

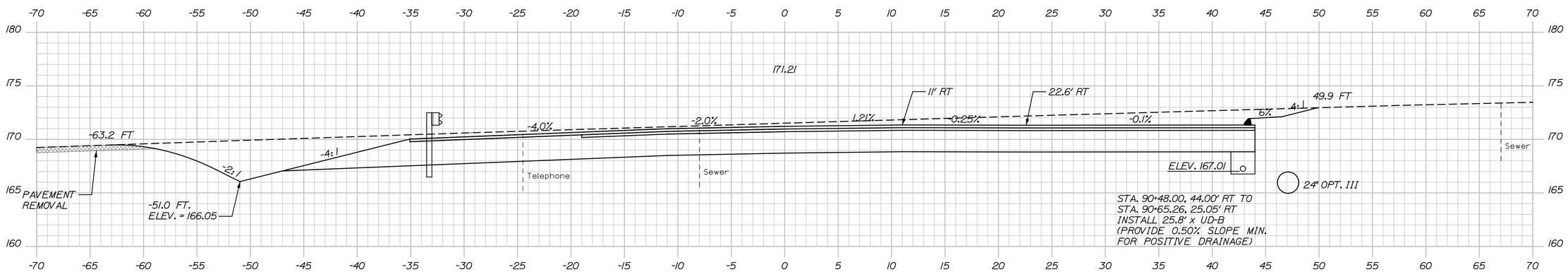

90+50.00

STA. 90+34.29, LT
INSTALL GUARDRAIL 350 FLARED TERMINAL

STA. 90+29.60, LT TO STA. 90+68.60, LT
INSTALL EROSION CONTROL BLANKET

STA. 91+10.00 RT TO STA. 28+26.53 LT
INSTALL CURB TYPE 3 - MOLD 2

T·Y·LIN INTERNATIONAL

STATE OF MAINE
DEPARTMENT OF TRANSPORTATION

BRIDGE NO. 2660

WIN
16705.00

BRIDGE PLANS

PROJ. MANAGER	BY	DATE
DESIGN-DETAILED	N.B.	.
CHECKED-REVIEWED		.
DESIGN2-DETAILED2		
DESIGN3-DETAILED3		
REVISIONS 1		
REVISIONS 2		
REVISIONS 3		
REVISIONS 4		
FIELD CHANGES		

SIGNATURE

P.E. NUMBER

DATE

PENOBSCOT RIVER BRIDGE
PENOBSCOT RIVER
HOWLAND-ENFIELD PENOBSCOT COUNTY

CROSS SECTIONS
OLD COUNTY ROAD (NORTH)

SHEET NUMBER
50
OF 127

Date:12/16/2014
Username:
Division:
Filename: ...\HIGHWAY\MSTA\XSections.dgn
Sta. 90+50.00 to Sta. 90+56.62

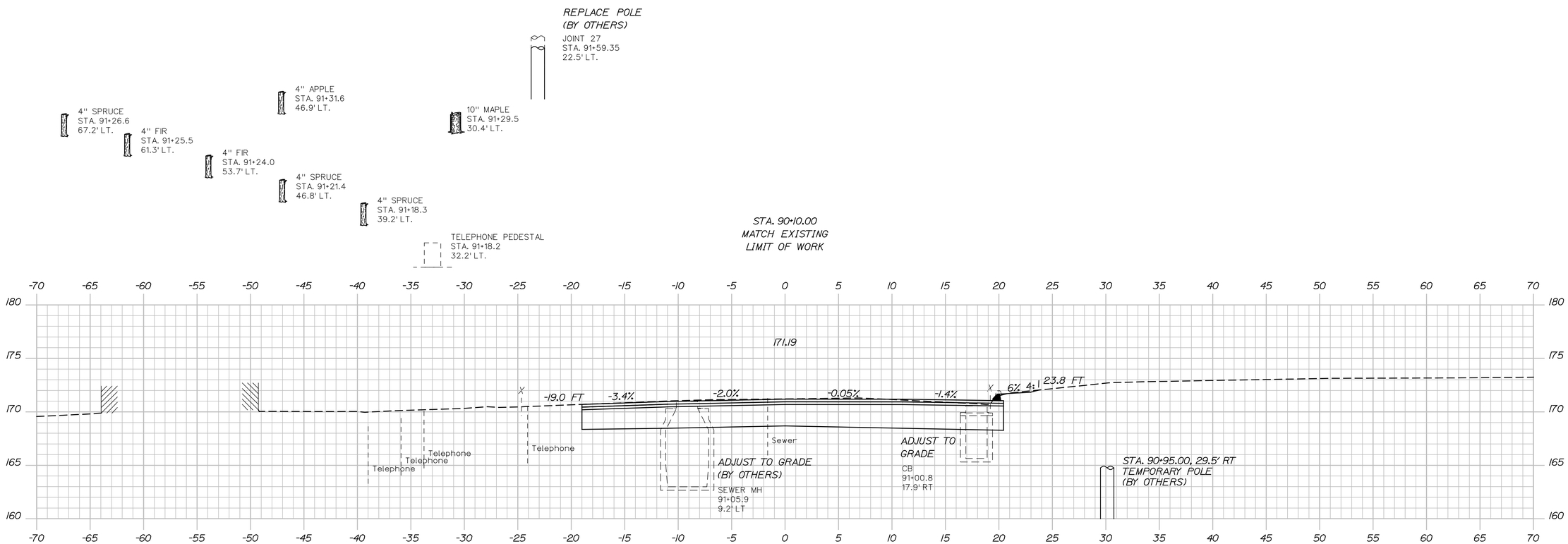

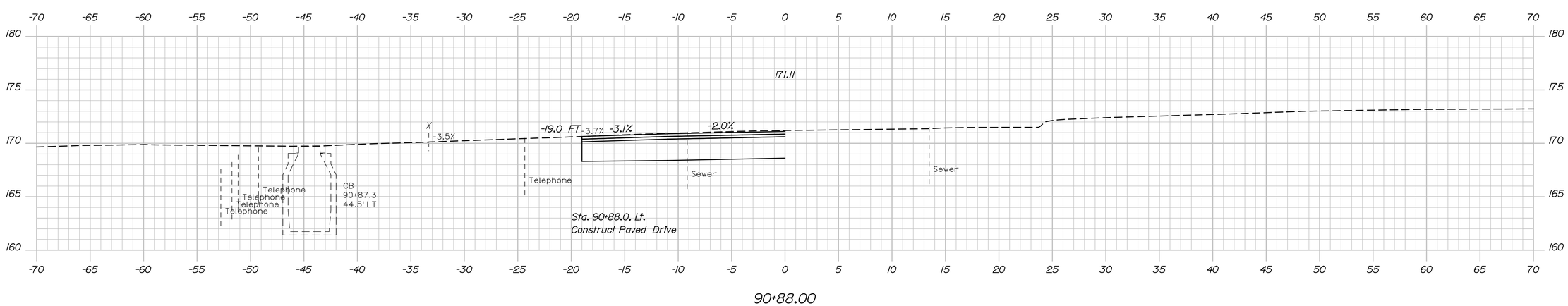

Sta. 90+88.00 to Sta. 91+00.00

Filename: ...\HIGHWAY\MSTA\XSections.dgn Division: Username: Date:12/16/2014

STATE OF MAINE
DEPARTMENT OF TRANSPORTATION

BRIDGE NO. 2660

WIN 16705.00

BRIDGE PLANS

PROJ. MANAGER	N.B.	BY	DATE
DESIGN-DETAILED			
CHECKED-REVIEWED			
DESIGN2-DETAILED2			
DESIGN3-DETAILED3			
REVISIONS 1			
REVISIONS 2			
REVISIONS 3			
REVISIONS 4			
FIELD CHANGES			

SIGNATURE

P.E. NUMBER

DATE

PENOBSCOT RIVER BRIDGE
PENOBSCOT RIVER
HOWLAND-ENFIELD PENOBSCOT COUNTY

CROSS SECTIONS
OLD COUNTY ROAD (NORTH)

T·Y·LIN INTERNATIONAL

SHEET NUMBER
51
OF 127

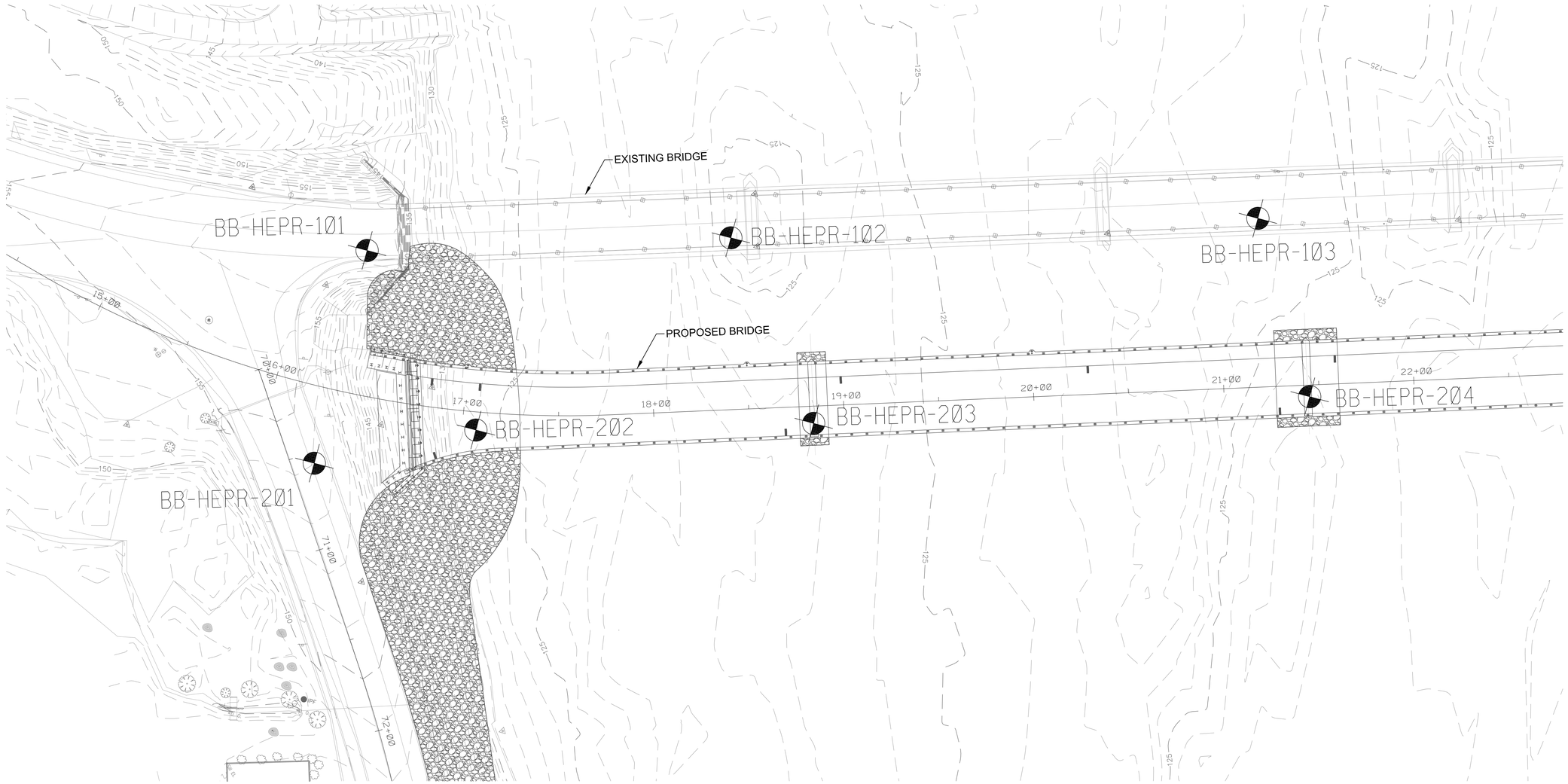

NOTES:

1) BASE MAP DEVELOPED FROM ELECTRONIC FILES PROVIDED BY T.Y. LIN INTERNATIONAL ON SEPTEMBER 10, 2012 (FILES INCLUDED ALIGNMENTS.DGN) NOVEMBER 4, 2014 (FILES INCLUDED CONTOURS_GEOTECH.DGN, AND TOPO_GEOTECH.DGN), AND DECEMBER 2, 2014 FILES INCLUDED BRIDGE_GEOTECH.DGN)

2) THE AS DRILLED LOCATIONS OF THE TEST BORINGS AND PROBES WERE SURVEYED BY MAINE DOT SURVEY CREW. COORDINATES WERE GIVEN BY MAINE DOT SURVEY.

3) BB-HEPR-200 SERIES BORINGS WERE PERFORMED BY MAINE TEST BORING OF HERMON, MAINE BETWEEN AUGUST 19, 2013 AND AUGUST 29, 2013 AND OBSERVED BY GZA PERSONNEL.

4) HB-HEPR-100 SERIES BORINGS WERE PERFORMED BY MAINE DOT IN 2010.

LEGEND

BB-HEPR-207 — LOCATION AND DESIGNATION OF RT. 155 BRIDGE TEST BORING

STATE OF MAINE
DEPARTMENT OF TRANSPORTATION

BH-1670(500)X

WIN 16705.00

BRIDGE NO.2660

BRIDGE PLANS

STATE OF MAINE · CHRISTOPHER SNOW No. 7275 · LICENSED PROFESSIONAL ENGINEER

SIGNATURE

7275

P.E. NUMBER

12-03-14

DATE

	BY	DATE
PROJ. MANAGER		
DESIGN-DETAILED	J. BARON	
CHECKED-REVIEWED	C. SNOW	
DESIGN2-DETAILED2		
DESIGN3-DETAILED3		
REVISIONS 1		
REVISIONS 2		
REVISIONS 3		
REVISIONS 4		
FIELD CHANGES		

ROUTE 155 BRIDGE OVER THE
PENOBSCOT RIVER
HOWLAND-ENFIELD PENOBSCOT COUNTY

BORING LOCATION PLAN
1 OF 2

SHEET NUMBER

52

OF 127

GZA-\\GZAPORT1\Jobs\09 Jobs\00257700\09.00257796.00 - Howland Bridge\Figures-CAD\25796 F_Boring Location Plan-2014-12-03.dwg [BORING LOCATION PLAN] December 12, 2014 - 2:02pm jamber.voll

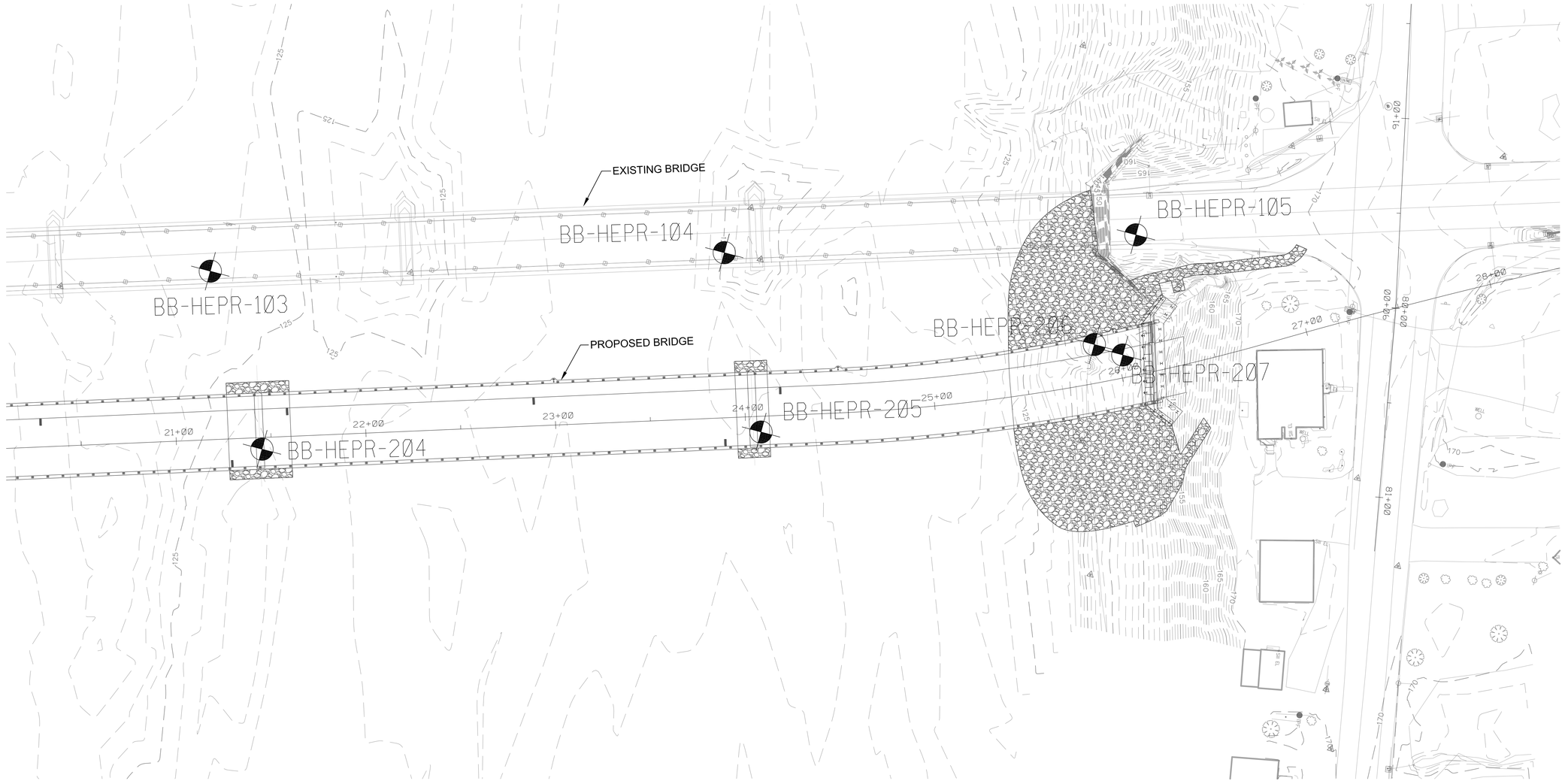

NOTES:

1) BASE MAP DEVELOPED FROM ELECTRONIC FILES PROVIDED BY T.Y. LIN INTERNATIONAL ON SEPTEMBER 10, 2012 (FILES INCLUDED ALIGNMENTS.DGN) NOVEMBER 4, 2014 (FILES INCLUDED CONTOURS_GEOTECH.DGN, AND TOPO_GEOTECH.DGN), AND DECEMBER 2, 2014 FILES INCLUDED BRIDGE_GEOTECH.DGN)

2) THE AS DRILLED LOCATIONS OF THE TEST BORINGS AND PROBES WERE SURVEYED BY MAINE DOT SURVEY CREW. COORDINATES WERE GIVEN BY MAINE DOT SURVEY.

3) BB-HEPR-200 SERIES BORINGS WERE PERFORMED BY MAINE TEST BORING OF HERMON, MAINE BETWEEN AUGUST 19, 2013 AND AUGUST 29, 2013 AND OBSERVED BY GZA PERSONNEL.

4) HB-HEPR-100 SERIES BORINGS WERE PERFORMED BY MAINE DOT IN 2010.

LEGEND

BB-HEPR-207 — LOCATION AND DESIGNATION OF RT. 155 BRIDGE TEST BORING

STATE OF MAINE
DEPARTMENT OF TRANSPORTATION

BH-1670(500)X

WIN 16705.00

BRIDGE NO.2660

BRIDGE PLANS

STATE OF MAINE — CHRISTOPHER SNOW No. 7275 — LICENSED PROFESSIONAL ENGINEER

		BY	DATE
PROJ. MANAGER			
DESIGN-DETAILED		J. BARON	
CHECKED-REVIEWED		C. SNOW	
DESIGN2-DETAILED2			
DESIGN3-DETAILED3			
REVISIONS 1			
REVISIONS 2			
REVISIONS 3			
REVISIONS 4			
FIELD CHANGES			

SIGNATURE

7275

P.E. NUMBER

12-03-14

DATE

ROUTE 155 BRIDGE OVER THE PENOBSCOT RIVER
HOWLAND-ENFIELD PENOBSCOT COUNTY

BORING LOCATION PLAN
2 OF 2

SHEET NUMBER

53

OF 127

G:\Z-\Jcpport1\Joes\09 Joes\00257000\09.00257916.00 - Howland Bridge\Figures-CAD\25796 F_Boring Location Plan-2014-12-03.dwg [BORING LOCATION PLAN (2)] December 12, 2014 - 12:07pm jamber.voll

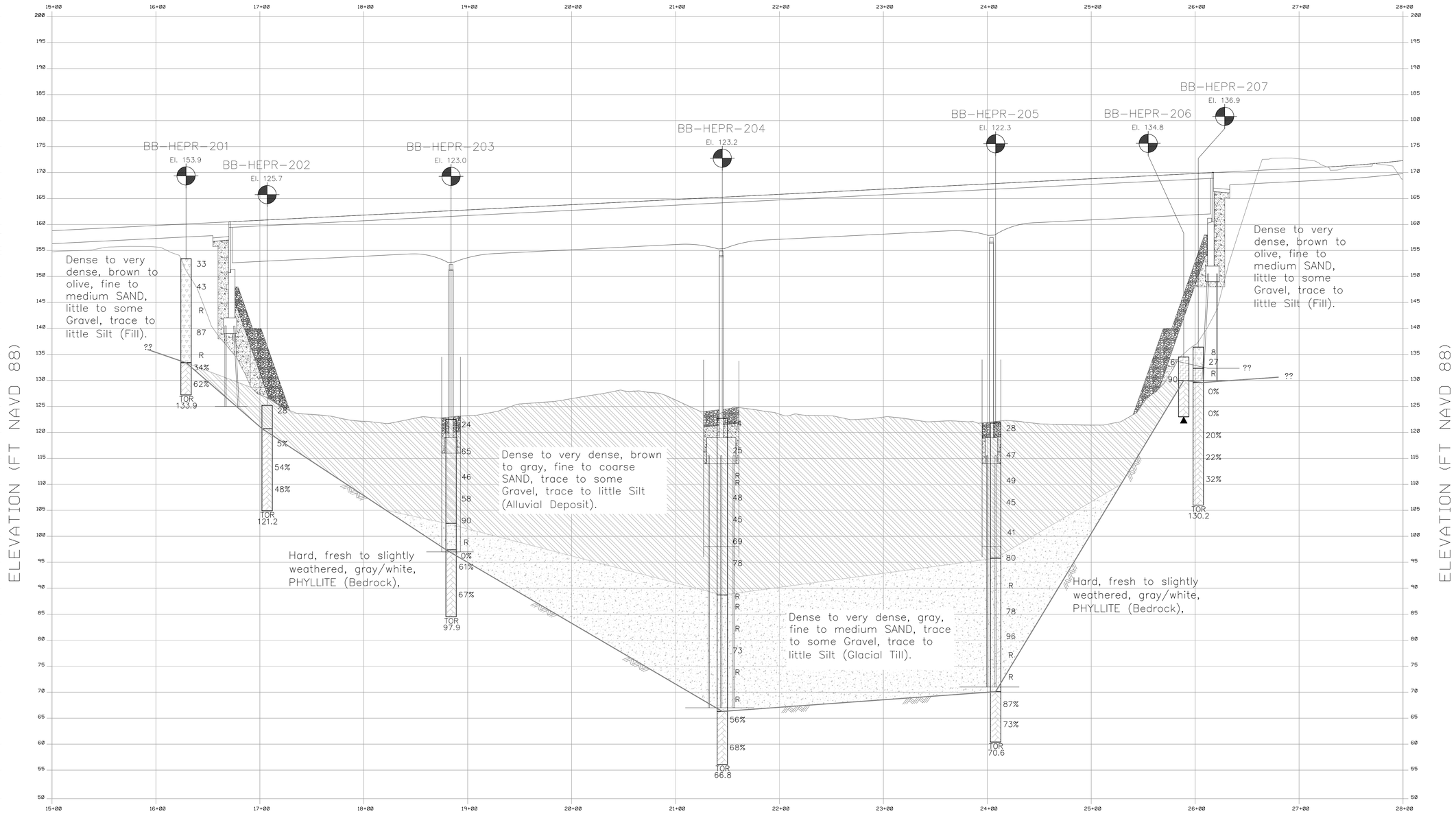

LEGEND:

BB-HEPR-207 — BOREHOLE DESIGNATION
OFFSET 55'L — OFFSET FROM BASELINE

30 — ENERGY-CORRECTED STANDARD PENETRATION TEST (SPT) N-VALUE, N60
▽ — WATER LEVEL MEASURED DURING/AFTER DRILLING
R — REFUSAL (>50 BLOWS FOR 1" PENETRATION)
30% — RQD OF CORE RUN
TOR 130.2 — TOP OF CORED BEDROCK (FT-NAVD 1988)
▲ — DRILLING TERMINATED WITHOUT ROCK CORE

BORING STICK HATCH LEGEND:

FILL

VARIABLE RIVER BOTTOM SAND & SILT DEPOSIT

GLACIAL TILL

WEATHERED BEDROCK

BEDROCK

NOTES:

1) BASE PROFILE DEVELOPED FROM ELECTRONIC FILES DATED DECEMBER 3, 2014 PROVIDED BY T.Y. LIN INTERNATIONAL ENTITLED Profile-Geotech.dgn. AND BDELEVATION - Geotech.dgn.

2) THIS GENERALIZED INTERPRETIVE SOIL PROFILE IS INTENDED TO CONVEY TRENDS IN SUBSURFACE CONDITIONS. THE BOUNDARIES BETWEEN STRATA ARE APPROXIMATE AND IDEALIZED, AND HAVE BEEN DEVELOPED BY INTERPRETATIONS OF WIDELY SPACED EXPLORATIONS AND SAMPLES. ACTUAL SOIL TRANSITIONS MAY VARY AND ARE PROBABLY MORE ERRATIC. FOR MORE SPECIFIC INFORMATION REFER TO THE EXPLORATION LOGS.

STATE OF MAINE
DEPARTMENT OF TRANSPORTATION

BH-1670(500)X

WIN 16705.00

BRIDGE NO.2660

BRIDGE PLANS

STATE OF MAINE
CHRISTOPHER L. SNOW
No. 7275
REGISTERED PROFESSIONAL ENGINEER

	BY	DATE
PROJ. MANAGER		
DESIGN-DETAILED	J. BARON	
CHECKED-REVIEWED	C. SNOW	
DESIGN2-DETAILED2		
DESIGN3-DETAILED3		
REVISIONS 1		
REVISIONS 2		
REVISIONS 3		
REVISIONS 4		
FIELD CHANGES		

SIGNATURE 7275

P.E. NUMBER

12-03-14

DATE

ROUTE 155 BRIDGE OVER THE PENOBSCOT RIVER
HOWLAND-ENFIELD PENOBSCOT COUNTY

INTERPRETIVE SUBSURFACE PROFILE

SHEET NUMBER

54

OF 127

02A-\\jpraport\Jobs\09 Jobs\00257906\09.00257906.00 - Howland Bridge\Figures-CAD\Subsurface Profile Howland_2014-12-03.dwg [Layout1] December 12, 2014 - 12:02pm amber.vail

Maine Department of Transportation — Soil/Rock Exploration Log (US CUSTOMARY UNITS)

Boring No.: BB-HEPR-201

Project: Penobscot River Bridge, Route 155 | Location: Howland, Maine | PIN: 16705.00

Driller:	Maine Test Boring	Elevation (ft.)	153.9'	Auger ID/OD:	N/A
Operator:	Brad Enos	Datum:	NAVD88	Sampler:	Split Spoon
Logged By:	Joshua Szmyt	Rig Type:	CME-45 (Skid)	Hammer Wt./Fall:	140/30"
Date Start/Finish:	8/29/13 - 8/29/13	Drilling Method:	Cased Washed	Core Barrel:	NQ2
Boring Location:	N 633178, E 1761888	Casing ID/OD:	3"/3-1/2"	Water Level*:	River Boring
Hammer Efficiency Factor: 0.6		Hammer Type:	Automatic ☐ Hydraulic ☐ Rope & Cathead ☒		

Definitions: D = Split Spoon Sample; MD = Unsuccessful Split Spoon Sample attempt; U = Thin Wall Tube Sample; MU = Unsuccessful Thin Wall Tube Sample attempt; V = Insitu Vane Shear Test; MV = Unsuccessful Insitu Vane Shear Test attempt; R = Rock Core Sample; SSA = Solid Stem Auger; HSA = Hollow Stem Auger; RC = Roller Cone; WOH = weight of 140lb. hammer; WOR = weight of rods; WOIP = Weight of one person; S_u = Insitu Field Vane Shear Strength (psf); T_v = Pocket Torvane Shear Strength (psf); q_p = Unconfined Compressive Strength (ksf); N-uncorrected = Raw field SPT N-value; Hammer Efficiency Factor = Annual Calibration Value; N_{60} = SPT N-uncorrected corrected for hammer efficiency; N_{60} = (Hammer Efficiency Factor/60%)*N-uncorrected; $S_{u(lab)}$ = Lab Vane Shear Strength (psf); WC = water content, percent; LL = Liquid Limit; PL = Plastic Limit; PI = Plasticity Index; G = Grain Size Analysis; C = Consolidation Test

Sample No.	Pen/Rec. (in)	Sample Depth (ft.)	Blows (/6 in) Shear Strength (psf) or RQD (%)	N-uncorrected	N60	Casing Blows	Laboratory Testing Results/AASHTO and Unified Class.
1D	24/12	0.0 - 2.0	12-14-19-24	33	33	WA	
2D	24/16	5.0 - 7.0	12-23-20-16	43	43	42, 40, 40, 66, 70	SM A-1-b
3D	1/0	10.0 - 10.1	50/1"	--		WA, 79, 71	
4D	24/12	15.0 - 17.0	29-46-41-53	87	87	40, 63, 153, 94, 161	
5D	2/0	20.0 - 20.2	105/2"	--			
R1	32/29	21.5 - 24.2	RQD = 34%			NQ	
R2	24/22	24.2 - 26.2	RQD = 62%				

Visual Description and Remarks (Elevation 153.6):
- 0.3 — -ASPHALT-
- Dense, light brown, fine to medium SAND, some Gravel, trace Silt (SM). -FILL-
- Dense, brown, fine to coarse SAND, some Gravel, little Silt. (SM)
- No Recovery.
- Very dense, olive, fine to medium SAND, little Gravel, little Silt. Iron staining 9" from top of sample. (SM)
- 20.0 (El. 133.9) — No Recovery. Top of Bedrock at 20.0' bgs. Advanced roller bit to 21.5' bgs and set 3" ID casing. Hard, fresh, fine grained, gray/white PHYLLITE. Joints are closely spaced, high angle, planar, rough, fresh, tight, with Silt deposits. Rock Mass Quality = Very Poor. Rock Core Times (min/ft): 5.0, 4.0, 3.5
- Hard, fresh, fine-grained, gray/white PHYLLITE. Joints are moderately dipping, planar, rough, open. Rock Mass Quality = Fair. Rock Core Times (min/ft): 4.25, 4.25
- 26.2 (El. 127.7) — Bottom of Exploration at 26.20 feet below ground surface.

Remarks:
1. Encountered boulder at 9.8' bgs (approximately 2.6' thick).
2. Encountered boulder at 12.2' bgs (approximately 1.0' thick).

Stratification lines represent approximate boundaries between soil types; transitions may be gradual.
* Water level readings have been made at times and under conditions stated. Groundwater fluctuations may occur due to conditions other than those present at the time measurements were made.

Page 1 of 1 — Boring No.: BB-HEPR-201

Boring No.: BB-HEPR-202

Project: Penobscot River Bridge, Route 155 | Location: Howland, Maine | PIN: 16705.00

Driller:	Maine Test Boring	Elevation (ft.)	125.7' (mudline)	Auger ID/OD:	N/A
Operator:	Rich Leonard/Jay O'Leary	Datum:	NAVD88	Sampler:	Split Spoon
Logged By:	Joshua Szmyt	Rig Type:	CME-45 (Skid)	Hammer Wt./Fall:	140/30"
Date Start/Finish:	8/19/13 - 8/19/13	Drilling Method:	Cased Washed	Core Barrel:	NQ2
Boring Location:	N 633217, E 1751966	Casing ID/OD:	4"/4-1/2" & 3"/3-1/2"	Water Level*:	River Boring
Hammer Efficiency Factor: 0.6		Hammer Type:	Automatic ☐ Hydraulic ☐ Rope & Cathead ☒		

Sample No.	Pen/Rec. (in)	Sample Depth (ft.)	Blows (/6 in) Shear Strength (psf) or RQD (%)	N-uncorrected	N60	Casing Blows	Laboratory Testing Results/AASHTO and Unified Class.
1D	24/7	0.0 - 2.0	6-17-11-11	28	28	66, 81, 131, 108, 388	
R1	57/51	5.5 - 10.3	RQD = 5%			NQ	
R2	60/56	10.3 - 15.3	RQD = 54%				q_p = 3.49 ksi
R3	60/51	15.3 - 20.3	RQD = 48%				

Visual Description and Remarks:
- Medium dense, gray, fine to coarse, sandy GRAVEL, trace Silt. -ALLUVIAL DEPOSIT- (GM)
- 4.5 (El. 121.2) — Top of Bedrock at 4.5' bgs. Advanced roller bit to 5.5' bgs and set 3" ID casing. Hard, fresh, fine grained, gray/white PHYLLITE. Primary joints are closely spaced, high angle to moderately dipping, planar to undulating, rough to smooth, fresh to discolored, very tight to tight. Secondary joints are closely to very closely spaced, moderately dipping, planar to stepped, rough to smooth, discolored, partially open to open. Rock Mass Quality = Very Poor. Rock Core Times (min/ft): 6.5, 5.0, 5.25, 6.0, 6.0
- Hard, fresh to slightly weathered, fine grained, gray/white PHYLLITE. Joints are very closely to moderately spaced, low to high angle, undulating to planar, fresh to discolored, partially open to wide. Rock Mass Quality = Fair. Rock Core Times (min/ft): 5.5, 9.0, 6.75, 11.0, 8.0
- Hard, fresh to slightly weathered, fine grained, gray/white PHYLLITE. Joints are closely spaced, low to high angle, planar, rough to smooth, discolored, open. Rock Mass Quality = Poor. Rock Core Times (min/ft): 9.5, 7.25, 7.75, 9.25, 8.5
- 20.3 (El. 105.4) — Bottom of Exploration at 20.30 feet below ground surface.

Remarks:
1. Cobbles from 2.5' bgs to 4.5' bgs (El 123.2' to 121.2').
2. Encountered Bedrock at El 121.2' and advanced roller bit to El 120.2' before coring. Set 3"-ID casing before coring.
3. Depth of water = 2.3'.

Stratification lines represent approximate boundaries between soil types; transitions may be gradual.
* Water level readings have been made at times and under conditions stated. Groundwater fluctuations may occur due to conditions other than those present at the time measurements were made.

Page 1 of 1 — Boring No.: BB-HEPR-202

Boring No.: BB-HEPR-203

Project: Penobscot River Bridge, Route 155 | Location: Howland, Maine | PIN: 16705.00

Driller:	Maine Test Boring	Elevation (ft.)	123.0' (mudline)	Auger ID/OD:	N/A
Operator:	Rich Leonard/Jay O'Leary	Datum:	NAVD88	Sampler:	Split Spoon
Logged By:	Joshua Szmyt	Rig Type:	CME-45 (Skid)	Hammer Wt./Fall:	140/30"
Date Start/Finish:	8/20/13 - 8/22/13	Drilling Method:	Cased Washed	Core Barrel:	NQ2
Boring Location:	N 633266, E 1762136	Casing ID/OD:	4"/4-1/2" & 3"/3-1/2"	Water Level*:	River Boring
Hammer Efficiency Factor: 0.6		Hammer Type:	Automatic ☐ Hydraulic ☐ Rope & Cathead ☒		

Sample No.	Pen/Rec. (in)	Sample Depth (ft.)	Blows (/6 in) Shear Strength (psf) or RQD (%)	N-uncorrected	N60	Casing Blows	Laboratory Testing Results/AASHTO and Unified Class.
1D	24/8	0.0 - 2.0	5-13-11-17	24	24	29, 38, 49, 36, 39, 41	
2D	24/5	6.0 - 8.0	19-17-48-30	65	65	34, 54, 68, 83, 99	
3D	24/11	11.0 - 13.0	9-27-19-24	46	46	41, 48, 77, 111	
4D	24/10	15.0 - 17.0	9-22-36-40	58	58	50, 76, 119, 111, 112	SW-SM A-1-b
5D	24/14	20.0 - 22.0	20-28-62-102	90	90	71, 262, 69, 144, 281	
6D	1/0	25.0 - 25.1	100/1"	--		>100	
R1	12/9	27.0 - 28.0	RQD = 0%			NQ	
R2	60/60	28.0 - 33.0	RQD = 61%				
R3	60/60	33.0 - 38.0	RQD = 67%				

Visual Description and Remarks:
- Medium dense, brown, gravelly, fine to coarse SAND, trace Silt. (SM)
- 5.0 (El. 118.0) — Very dense, gray, fine to coarse SAND, some Gravel, little Silt. -ALLUVIAL DEPOSIT- (SW-SM)
- Dense, gray, fine to medium SAND, little Gravel, trace Silt. (SM)
- Very dense, gray, fine to coarse SAND, some Gravel, trace Silt. (SW-SM)
- 20.0 (El. 103.0) — Very dense, gray, sandy GRAVEL, trace Silt. -GLACIAL TILL- (SM)
- No Recovery. Split spoon refusal at 25.1' bgs.
- 25.1 (El. 97.9) — Top of Bedrock at 25.1' bgs. Advanced roller bit to 27.0' and set 3" ID casing. Hard, fresh, fine grained, gray/white, PHYLLITE. Joints are closely spaced, moderately dipping, fresh to discolored, planar, rough, open. Rock Mass Quality = Very Poor. Rock Core Times (min/ft): 3.0
- Hard, fresh, fine grained, gray/white, PHYLLITE. Joints are closely to moderately spaced, high angle to vertical, undulating to planar, rough, fresh to discolored, tight. Rock Mass Quality = Fair. Rock Core Times (min/ft): 3.25, 4.0, 3.5, 2.5, 2.75
- Hard, fresh to discolored, fine grained, gray/white, PHYLLITE. Primary joints are moderately spaced, high angle, undulating to stepped, rough, discolored to fresh, open. Secondary joints are moderately spaced, horizontal to low angle, discolored, open. Rock Mass Quality = Fair. Rock Core Times (min/ft): 3.5, 4.25, 3.75, 2.0, 2.0
- 38.0 (El. 85.0) — Bottom of Exploration at 38.00 feet below ground surface.

Remarks:
1. Rock in tip of sample 1D split spoon.
2. Encountered Cobbles from approximately 2' bgs to 5.5' bgs.
3. Increased drilling effort after sample 2D.
4. Increased drilling effort at 13' bgs.
5. Encountered casing refusal at 21.6' bgs. Advanced roller bit to 24.0' bgs and continued driving casing to 24.5' bgs.

Stratification lines represent approximate boundaries between soil types; transitions may be gradual.
* Water level readings have been made at times and under conditions stated. Groundwater fluctuations may occur due to conditions other than those present at the time measurements were made.

Page 1 of 1 — Boring No.: BB-HEPR-203

Boring No.: BB-HEPR-204

Project: Penobscot River Bridge, Route 155 | Location: Howland, Maine | PIN: 16705.00

Driller:	Maine Test Boring	Elevation (ft.)	123.2' (mudline)	Auger ID/OD:	N/A
Operator:	Rich Leonard/Brad Enos	Datum:	NAVD88	Sampler:	Split Spoon
Logged By:	Joshua Szmyt	Rig Type:	CME-45 (Skid)	Hammer Wt./Fall:	140/30"
Date Start/Finish:	8/22/13 - 8/26/13	Drilling Method:	Cased Washed	Core Barrel:	NQ2
Boring Location:	N 633347, E 1762385	Casing ID/OD:	4"/4-1/2" & 3"/3-1/2"	Water Level*:	River Boring
Hammer Efficiency Factor: 0.6		Hammer Type:	Automatic ☐ Hydraulic ☐ Rope & Cathead ☒		

Sample No.	Pen/Rec. (in)	Sample Depth (ft.)	Blows (/6 in) Shear Strength (psf) or RQD (%)	N-uncorrected	N60	Casing Blows	Laboratory Testing Results/AASHTO and Unified Class.
1D	24/5	0.0 - 2.0	4-8-6-7	14	14	9, 19, 25, 27	
2D	24/11	4.0 - 6.0	16-10-15-16	25	25	16, 32, 38, 117, 102	
3D	6/0	9.0 - 9.5	132/6"	--		WA	
4D	13/6	11.0 - 12.1	14/45/100/1"	--			
5D	24/5	14.0 - 16.0	20-24-24-23	48	48	54, 78, 84, 88, 130	
6D	24/12	19.0 - 21.0	14-21-24-53	45	45	59, 115, 113, 151, 150	
7D	24/14	24.0 - 26.0	27-32-37-29	69	69	101, 96, 92, 183, WA	SW-SM A-1-b
8D	24/14	29.0 - 31.0	41-42-36-54	78	78		
9D	12/0	34.0 - 35.0	72/100/6"	--			
10D	15/12	36.0 - 37.3	32/70/73/3"	--			
11D	15/11	39.0 - 40.3	47/67/58/3"	--			
12D	24/12	44.0 - 46.0	28-35-34-46	73	73		
13D	24/11	49.0 - 51.0	8-56-63-89	>100		73, 177, WA	
14D	24/13	54.0 - 56.0	43-47-61-69	>100		86, 151	SM A-1-b
R1	60/60	56.6 - 61.6	RQD = 56%			NQ	
R2	60/58	61.6 - 66.6	RQD = 68%				q_p= 4.18 ksi

Visual Description and Remarks:
- Medium dense, light brown, medium to coarse SAND, some Gravel, trace Silt. -ALLUVIAL DEPOSIT- (SM)
- Medium dense, light brown, gravelly, medium to coarse SAND, trace Silt. (SM)
- 8.0 (El. 115.2) — No Recovery.
- Very dense, gray, fine to coarse SAND, little Gravel, trace Silt. (SM)
- Dense, gray, fine to coarse SAND, some Gravel, trace Silt. (SM)
- Dense, gray, fine to coarse SAND, some Gravel, trace Silt. -ALLUVIAL DEPOSIT- (SM)
- Very dense, gray, fine to coarse SAND, some Gravel, trace Silt. (SW-SM)
- Very dense, gray, gravelly, fine to coarse SAND, trace Silt. (GM)
- 34.0 (El. 89.2) — No Recovery.
- Very dense, gray, fine to medium, sandy SILT, some Gravel. (ML)
- Very dense, gray, fine to medium, sandy SILT, little Gravel. -GLACIAL TILL- (ML)
- 44.0 (El. 79.2) — Very dense, gray, fine SAND, little Silt, trace Gravel. -GLACIAL TILL- (SM)
- Very dense, gray, fine to medium SAND, little Silt, trace Gravel. (SM)
- Very dense, gray, fine to coarse SAND, some Gravel, little Silt. (SM)
- 56.4 (El. 66.8) — Top of Bedrock at 56.4' bgs. Advanced roller bit to 56.6' bgs and set 3" ID casing. Hard, fresh, fine grained, white/gray PHYLLITE. Joints are closely to moderately spaced, high angle to vertical, undulating, smooth, fresh to discolored, tight to open. Rock Mass Quality = Fair. Rock Core Times (min/ft): 1.25, 1.5, 3.5, 3.0, 2.25
- Hard, fresh, fine grained, white/gray PHYLLITE. Joints are closely spaced, moderately dipping, undulating, rough, fresh to discolored, open to moderately wide. Rock Mass Quality = Fair. Rock Core Times (min/ft): 2.0, 2.0, 3.5, 3.5, 4.75
- 66.6 (El. 56.6) — Bottom of Exploration at 66.60 feet below ground surface.

Remarks:
1. Rock in tip of split spoon for sample 2D.
2. Wash water change from brown to gray at 8' bgs.
3. Encountered Cobbles from 9' bgs to 11' bgs. Probably pushed Cobble with sample 3D. Advance roller bit from 9' bgs to 11' bgs before advancing casing to 11' bgs.
4. Encountered Boulder 12.1' bgs (0.8' thick). ler bit to 50.6' bgs and set 3" ID casing.

Stratification lines represent approximate boundaries between soil types; transitions may be gradual.
* Water level readings have been made at times and under conditions stated. Groundwater fluctuations may occur due to conditions other than those present at the time measurements were made.

Page 1 of 1 — Boring No.: BB-HEPR-204

STATE OF MAINE
DEPARTMENT OF TRANSPORTATION
BH-1670(500)X
WIN 16705.00
BRIDGE NO. 2660
BRIDGE PLANS

STATE OF MAINE — CHRISTOPHER L. SNOW — No. 7275 — LICENSED PROFESSIONAL ENGINEER

SIGNATURE 7275
P.E. NUMBER 12-03-14
DATE

	BY	DATE
PROJ. MANAGER		
DESIGN-DETAILED	J. BARON	
CHECKED-REVIEWED	C. SNOW	
DESIGN2-DETAILED2		
DESIGN3-DETAILED3		
REVISIONS 1		
REVISIONS 2		
REVISIONS 3		
REVISIONS 4		
FIELD CHANGES		

PENOBSCOT RIVER BRIDGE
PENOBSCOT RIVER
HOWLAND-ENFIELD PENOBSCOT COUNTY

BORING LOGS

Maine Department of Transportation

Soil/Rock Exploration Log

US CUSTOMARY UNITS

Project: Penobscot River Bridge, Route 155		Location: Howland, Maine		Boring No.: BB-HEPR-205	PIN: 16705.00
Driller:	Maine Test Boring	Elevation (ft.)	122.3' (mudline)	Auger ID/OD:	N/A
Operator:	Brad Enos	Datum:	NAVD88	Sampler:	Split Spoon
Logged By:	Joshua Szmyt	Rig Type:	CME-45 (Skid)	Hammer Wt./Fall:	140/30"
Date Start/Finish:	8/26/13 - 8/26/13	Drilling Method:	Cased Washed	Core Barrel:	NQ2
Boring Location:	N 633424, E 1762636	Casing ID/OD:	4"/4-1/2" & 3"/3-1/2"	Water Level*:	River Boring
Hammer Efficiency Factor: 0.6		Hammer Type:	Automatic ☐ Hydraulic ☐	Rope & Cathead ☒	

Definitions:
D = Split Spoon Sample; MD = Unsuccessful Split Spoon Sample attempt; U = Thin Wall Tube Sample; MU = Unsuccessful Thin Wall Tube Sample attempt; V = Insitu Vane Shear Test; MV = Unsuccessful Insitu Vane Shear Test attempt
R = Rock Core Sample; SSA = Solid Stem Auger; HSA = Hollow Stem Auger; RC = Roller Cone; WOH = weight of 140lb. hammer; WOR = weight of rods; WO1P = Weight of one person
S_u = Insitu Field Vane Shear Strength (psf); T_v = Pocket Torvane Shear Strength (psf); q_p = Unconfined Compressive Strength (ksf); N-uncorrected = Raw field SPT N-value; Hammer Efficiency Factor = Annual Calibration Value; N_{60} = SPT N-uncorrected corrected for hammer efficiency; N_{60} = (Hammer Efficiency Factor/60%)*N-uncorrected
$S_{u(lab)}$ = Lab Vane Shear Strength (psf); WC = water content, percent; LL = Liquid Limit; PL = Plastic Limit; PI = Plasticity Index; G = Grain Size Analysis; C = Consolidation Test

Depth (ft.)	Sample No.	Pen./Rec. (in)	Sample Depth (ft.)	Blows (/6 in) Shear Strength (psf) or RQD (%)	N-uncorrected	N_{60}	Casing Blows	Elevation (ft.)	Visual Description and Remarks	Laboratory Testing Results/ AASHTO and Unified Class.
0	1D	24/3	0.0 - 2.0	5-11-17-30	28	28			Medium dense, light brown, fine to medium, sandy GRAVEL, trace Silt. (GM)	
							32			
							40	120.3	2.0	
							132			
							261			
5	2D	24/15	5.0 - 7.0	16-20-27-28	47	47	69		Dense, light brown, fine to medium SAND, some Gravel, little Silt. (SM)	
							44			
							33			
							116			
							171			
10	3D	24/12	10.0 - 12.0	15-24-25-21	49	49	31		Dense, light brown, fine to coarse SAND, trace Gravel, trace Silt. -ALLUVIAL DEPOSIT- (SM)	
							76			
							107			
							138			
							161			
15							178			
	4D	24/11	16.0 - 18.0	13-22-23-18	45	45	WA		Dense, light brown, fine to coarse SAND, some Gravel, trace Silt. (SW-SM)	
20							148			
	5D	24/16	21.0 - 23.0	14-19-22-32	41	41	183		Dense, light brown, fine SAND, trace Gravel, trace Silt. (SM)	
							WA			
25										
	6D	24/9	26.0 - 28.0	43-49-31-29	80	80		95.7	Top 7": Dense, light brown, fine SAND, little Gravel, trace Silt. (SM) 26.6 Bottom 2": Dense, gray, fine SAND, little Gravel, little Silt. (SM)	
30										
	7D	24/7	31.0 - 33.0	86-72-62-73	>100				Very dense, gray, fine to coarse SAND, some Silt, little Gravel. -GLACIAL TILL- (SM)	
35										
	8D	24/10	36.0 - 38.0	29-38-40-54	78	78			Very dense, gray, silty, fine to medium SAND, trace Gravel. (SM)	
40										
	9D	24/14	41.0 - 43.0	50-42-54-63	96	96			Very dense, gray, silty, fine to medium SAND, little Gravel. (SM)	SM A-4
45										
	10D	24/2	46.0 - 48.0	45-62-63-83	>100				Very dense, gray, gravelly, fine to medium SAND, little Silt. (SM)	
50										
	11D	9/6	51.0 - 51.8	42/70/2"	--			70.6	Very dense, gray, silty, fine to medium SAND, little Gravel. (SM) 51.7	
	R1	60/52	52.0 - 57.0	RQD = 87%			NQ		Top of Bedrock at 51.7' bgs. Advanced roller bit to 52.0' bgs and set 3" ID casing. Hard, fresh, fine grained, gray/white PHYLLITE. Joints are very closely to closely spaced, moderately dipping, undulating, rough, fresh to discolored, tight to partially open. Rock Mass Quality = Good Rock Core Times (min/ft): 6.0, 6.5, 6.5, 5.5, 3.0	
55										
	R2	53/52	57.0 - 61.4	RQD = 73%					Hard, fresh, fine grained, gray/white PHYLLITE. Joints are very closely to moderately spaced, moderately dipping, undulating, rough, fresh to discolored, tight to moderately wide. Rock Mass Quality = Fair Rock Core Times (min/ft): 3.0, 3.5, 3.75, 4.0, 3.5	
60								60.9	61.4 Bottom of Exploration at 61.40 feet below ground surface.	
65										

Remarks:

1. Increased drilling effort at 33' bgs.

Stratification lines represent approximate boundaries between soil types; transitions may be gradual.
* Water level readings have been made at times and under conditions stated. Groundwater fluctuations may occur due to conditions other than those present at the time measurements were made.

Page 1 of 1 Boring No.: BB-HEPR-205

Maine Department of Transportation

Soil/Rock Exploration Log

US CUSTOMARY UNITS

Project: Penobscot River Bridge, Route 155		Location: Howland, Maine		Boring No.: BB-HEPR-206	PIN: 16705.00
Driller:	Maine Test Boring	Elevation (ft.)	134.8'	Auger ID/OD:	N/A
Operator:	Brad Enos	Datum:	NAVD88	Sampler:	Split Spoon
Logged By:	Joshua Szmyt	Rig Type:	CME-45 (Skid)	Hammer Wt./Fall:	140/30"
Date Start/Finish:	8/28/13 - 8/28/13	Drilling Method:	Cased Washed	Core Barrel:	NQ2
Boring Location:	N 633514, E 1762794	Casing ID/OD:	3"/3-1/2"	Water Level*:	NA
Hammer Efficiency Factor: 0.6		Hammer Type:	Automatic ☐ Hydraulic ☐	Rope & Cathead ☒	

Definitions:
D = Split Spoon Sample; MD = Unsuccessful Split Spoon Sample attempt; U = Thin Wall Tube Sample; MU = Unsuccessful Thin Wall Tube Sample attempt; V = Insitu Vane Shear Test; MV = Unsuccessful Insitu Vane Shear Test attempt
R = Rock Core Sample; SSA = Solid Stem Auger; HSA = Hollow Stem Auger; RC = Roller Cone; WOH = weight of 140lb. hammer; WOR = weight of rods; WO1P = Weight of one person
S_u = Insitu Field Vane Shear Strength (psf); T_v = Pocket Torvane Shear Strength (psf); q_p = Unconfined Compressive Strength (ksf); N-uncorrected = Raw field SPT N-value; Hammer Efficiency Factor = Annual Calibration Value; N_{60} = SPT N-uncorrected corrected for hammer efficiency; N_{60} = (Hammer Efficiency Factor/60%)*N-uncorrected
$S_{u(lab)}$ = Lab Vane Shear Strength (psf); WC = water content, percent; LL = Liquid Limit; PL = Plastic Limit; PI = Plasticity Index; G = Grain Size Analysis; C = Consolidation Test

Depth (ft.)	Sample No.	Pen./Rec. (in)	Sample Depth (ft.)	Blows (/6 in) Shear Strength (psf) or RQD (%)	N-uncorrected	N_{60}	Casing Blows	Elevation (ft.)	Visual Description and Remarks	Laboratory Testing Results/ AASHTO and Unified Class.
0	1D	24/9	0.0 - 2.0	1-2-4-5	6	6	4		Loose, olive/brown, fine to medium SAND, little Gravel, trace Silt, trace organics. -ALLUVIAL DEPOSIT- (SM)	
							10			
							19			
							44			
							WA	130.3	4.5	
5	2D	24/11	5.0 - 7.0	28-48-42-53	90	90			Dense, brown and gray, highly weathered/decomposed PHYLLITE.	
10										
								123.3	11.5 Bottom of Exploration at 11.50 feet below ground surface.	
15										

Remarks:

1. Drove casing with 140 lb. hammer.
2. Increased drilling effort at 4.5' bgs.
3. Increased drilling effort at 11.5' bgs and wash water turned from brown to gray, probable top of competent Bedrock.

Stratification lines represent approximate boundaries between soil types; transitions may be gradual.
* Water level readings have been made at times and under conditions stated. Groundwater fluctuations may occur due to conditions other than those present at the time measurements were made.

Page 1 of 1 Boring No.: BB-HEPR-206

Maine Department of Transportation

Soil/Rock Exploration Log

US CUSTOMARY UNITS

Project: Penobscot River Bridge, Route 155		Location: Howland, Maine		Boring No.: BB-HEPR-207	PIN: 16705.00
Driller:	Maine Test Boring	Elevation (ft.)	136.9'	Auger ID/OD:	N/A
Operator:	Brad Enos	Datum:	NAVD88	Sampler:	Split Spoon
Logged By:	Joshua Szmyt	Rig Type:	CME-45 (Skid)	Hammer Wt./Fall:	140/30"
Date Start/Finish:	8/28/13 - 8/28/13	Drilling Method:	Cased Washed	Core Barrel:	NQ2
Boring Location:	N 633512, E 1762810	Casing ID/OD:	3"/3-1/2"	Water Level*:	NA
Hammer Efficiency Factor: 0.6		Hammer Type:	Automatic ☐ Hydraulic ☐	Rope & Cathead ☒	

Definitions:
D = Split Spoon Sample; MD = Unsuccessful Split Spoon Sample attempt; U = Thin Wall Tube Sample; MU = Unsuccessful Thin Wall Tube Sample attempt; V = Insitu Vane Shear Test; MV = Unsuccessful Insitu Vane Shear Test attempt
R = Rock Core Sample; SSA = Solid Stem Auger; HSA = Hollow Stem Auger; RC = Roller Cone; WOH = weight of 140lb. hammer; WOR = weight of rods; WO1P = Weight of one person
S_u = Insitu Field Vane Shear Strength (psf); T_v = Pocket Torvane Shear Strength (psf); q_p = Unconfined Compressive Strength (ksf); N-uncorrected = Raw field SPT N-value; Hammer Efficiency Factor = Annual Calibration Value; N_{60} = SPT N-uncorrected corrected for hammer efficiency; N_{60} = (Hammer Efficiency Factor/60%)*N-uncorrected
$S_{u(lab)}$ = Lab Vane Shear Strength (psf); WC = water content, percent; LL = Liquid Limit; PL = Plastic Limit; PI = Plasticity Index; G = Grain Size Analysis; C = Consolidation Test

Depth (ft.)	Sample No.	Pen./Rec. (in)	Sample Depth (ft.)	Blows (/6 in) Shear Strength (psf) or RQD (%)	N-uncorrected	N_{60}	Casing Blows	Elevation (ft.)	Visual Description and Remarks	Laboratory Testing Results/ AASHTO and Unified Class.
0	1D	24/0	0.0 - 2.0	1-4-4-5	8	8	WA		No Recovery.	
							34			
	2D	24/11	2.0 - 4.0	4-8-19-18	27	27	42		Medium dense, olive, damp, fine to medium SAND, some Silt, little Gravel. (SM) -FILL- (Possible reworked material)	
							--	132.9	4.0	
							WA			
5	3D	21/11	5.0 - 6.8	30-62-78-60/3"	>100				Very dense, brown to gray, fine to coarse SAND, some Gravel, little Silt. (Decomposed/highly weathered Bedrock) (SM)	SM A-1-b
	R1	60/12	6.8 - 11.8	RQD = 0%				130.1	6.8 Top of Bedrock at 6.8' bgs. Highly weathered PHYLLITE.	
							NQ			
10										
	R2	48/21	11.8 - 15.8	RQD = 0%					Hard, fresh, fine grained, gray/white PHYLLITE. Primary joints are very closely to closely spaced, high angle to vertical, undulating to planar, rough, fresh to discolored, tight. Secondary joints are very closely spaced, moderately dipping, undulating to planar, rough, discolored, tight. Rock Mass Quality = Very Poor Rock Core Times (min/ft): 7.25, 5.75, 4, 5, 4.0	
15								122.1	14.8	
	R3	60/60	15.8 - 20.8	RQD = 20%					Hard, fresh, fine grained, gray/white PHYLLITE. Joints are very closely to moderately spaced, moderately dipping to vertical, undulating to planar, fresh, open to wide, with Silt and Sand deposits. Rock Mass Quality = Very Poor Rock Core Times (min/ft): 2.5, 2.5, 2.75, 3.25, 3.5	
20										
	R4	60/51	20.8 - 25.8	RQD = 22%					R4 same as R3. Rock Mass Quality = Very Poor Rock Core Times (min/ft): 2.25, 1.5, 1.75, 2.5, 2.75	
25										
	R5	55/50	25.8 - 30.3	RQD = 32%					Hard, fresh, fine grained, gray/white PHYLLITE. Joints are extremely closely to moderately spaced, moderately dipping to vertical, planar, rough, open to wide. Rock Mass Quality = Poor Rock Core Times (min/ft): 1.75, 2.25, 4.0, 7.5, 4.0	
30								106.6	30.3 Bottom of Exploration at 30.30 feet below ground surface.	
35										

Remarks:

1. Drove casing with 140 lb. hammer.
2. Rock fragments (decomposed/highly weathered Bedrock) in tip of split spoon for sample 3D.
3. Wash water change from brown to gray during coring at approximately 14.8' bgs.

Stratification lines represent approximate boundaries between soil types; transitions may be gradual.
* Water level readings have been made at times and under conditions stated. Groundwater fluctuations may occur due to conditions other than those present at the time measurements were made.

Page 1 of 1 Boring No.: BB-HEPR-207

STATE OF MAINE
DEPARTMENT OF TRANSPORTATION

BH-1670(500)X

WIN 16705.00

BRIDGE NO. 2660 BRIDGE PLANS

STATE OF MAINE CHRISTOPHER L. SNOW No. 7275 LICENSED PROFESSIONAL ENGINEER

SIGNATURE 7275

P.E. NUMBER 12-03-14

DATE

	BY	DATE
PROJ. MANAGER		
DESIGN-DETAILED	J. BARON	
CHECKED-REVIEWED	C. SNOW	
DESIGN2-DETAILED2		
DESIGN3-DETAILED3		
REVISIONS 1		
REVISIONS 2		
REVISIONS 3		
REVISIONS 4		
FIELD CHANGES		

PENOBSCOT RIVER BRIDGE
PENOBSCOT RIVER
HOWLAND-ENFIELD PENOBSCOT COUNTY

BORING LOGS

SHEET NUMBER

56

OF 127

Maine Department of Transportation
Soil/Rock Exploration Log
US CUSTOMARY UNITS

Project: Penobscot River Bridge #2660 carries Route 155 over Penobscot
Location: Howland-Enfield, Maine

Boring No.: BB-HEPR-101
PIN: 16705.00

Driller:	Northern Test Boring	Elevation (ft.)	157.5	Auger ID/OD:	5" Solid Stem
Operator:	Mike Nadeau/Ty Whitworth	Datum:	NAVD88	Sampler:	Standard Split Spoon
Logged By:	B. Wilder	Rig Type:	Diedrich D-50 Track	Hammer Wt./Fall:	140#/30"
Date Start/Finish:	8/16/10; 10:30-16:30	Drilling Method:	Cased Wash Boring	Core Barrel:	NQ-2"
Boring Location:	N633293 E1761886	Casing ID/OD:	HW	Water Level*:	19.0 ft bgs.
Hammer Efficiency Factor: 0.678		Hammer Type:	Automatic ☒ Hydraulic ☐ Rope & Cathead ☐		

Definitions:
D = Split Spoon Sample
MD = Unsuccessful Split Spoon Sample attempt
U = Thin Wall Tube Sample
MU = Unsuccessful Thin Wall Tube Sample attempt
V = Insitu Vane Shear Test
MV = Unsuccessful Insitu Vane Shear Test attempt
R = Rock Core Sample
SSA = Solid Stem Auger
HSA = Hollow Stem Auger
RC = Roller Cone
WOH = weight of 140lb. hammer
WOR = weight of rods
WOIP = Weight of one person
S_u = Insitu Field Vane Shear Strength (psf)
T_v = Pocket Torvane Shear Strength (psf)
q_p = Unconfined Compressive Strength (ksf)
N-uncorrected = Raw field SPT N-value
Hammer Efficiency Factor = Annual Calibration Value
N_{60} = SPT N-uncorrected corrected for hammer efficiency
N_{60} = (Hammer Efficiency Factor/60%)*N-uncorrected
$S_{u(lab)}$ = Lab Vane Shear Strength (psf)
WC = water content, percent
LL = Liquid Limit
PL = Plastic Limit
PI = Plasticity Index
G = Grain Size Analysis
C = Consolidation Test

Depth (ft.)	Sample No.	Pen./Rec. (in)	Sample Depth (ft.)	Blows (/6 in) Shear Strength (psf) or RQD (%)	N-uncorrected	N_{60}	Casing Blows	Elevation (ft.)	Graphic Log	Visual Description and Remarks	Laboratory Testing Results/ AASHTO and Unified Class.
0							SSA	157.1		PAVEMENT. 0.4	
	1D	24/19	1.0 - 3.0	15/13/13/12	26	29				Brown, damp, medium dense, fine to coarse SAND, some gravel, trace silt, (Fill).	G#237550 A-1-b, SW-SM WC=3.9%
5	2D	24/20	5.0 - 7.0	16/31/36/32	67	76		151.5		6.0 Black, damp, very dense, fine to coarse SAND, little gravel, trace silt, (Fill).	
10	3D	24/15	10.0 - 12.0	3/3/2/2	5	6	20			Light brown to orange, wet, loose, fine to medium SAND, trace gravel and coarse sand, little silt (Fill).	
							26				
							26				
							35				
							25				
15	4D	24/16	15.0 - 17.0	3/3/2/2	5	6	11			Similar to above.	G#207064 A-2-4, SM WC=21.8%
							16				
							27				
							30				
							31				
20	5D	24/12	20.0 - 22.0	11/9/8/10	17	19	52	137.5		20.0 Brown, wet, medium dense, fine to coarse SAND, little gravel, some silt, trace organics, with brick pieces, (Fill).	
							320				
							55				
							72	134.5		23.0	
							94				
25	6D	9.6/7	25.0 - 25.8	23/50(3.6")	---		60			Light brown, wet, very dense, fine to coarse SAND, some gravel and silt, (Till). Cobble from 25.8-26.0 ft bgs. Roller Coned ahead to 30.3 ft bgs.	G#207066 A-2-4, SM WC=9.7%
							89				
							60	129.7		27.8 Very dense from 27.8-30.3 ft bgs., Weathered Rock?	
30	7D R1	3.6/3.6 36/23	30.0 - 30.3 30.3 - 33.3	50(3.6") RQD = 16%	---		NQ-2	127.2		30.3 Top of Intact Bedrock at Elev. 127.2 ft. Bedrock: Grey, fine-grained, moderately hard, slightly weathered, highly fractured, PHYLLITE, thin, steep bedding planes, joints very close, minor silt in-filling and iron staining. Rock Mass Quality is Very Poor [Vassalboro Formation] R1: Core Times (min:sec) 30.3-31.3 ft (6:00) 31.3-32.3 ft (5:15) 32.3-33.3 ft (6:45) 64% Recovery Core Blocked	
	R2	42/42	33.3 - 36.8	RQD = 0%						R2: CoreTimes (min:sec) 33.3-34.3 ft (4:20) 34.3-35.3 ft (3:16) 35.3-36.3 ft (4:30) 36.3-36.8 ft (5:00) 100% Recovery Core Blocked	
35	R3	36/36	36.8 - 39.8	RQD = 0%						R3: CoreTimes (min:sec) 36.8-37.8 ft (5:00) 37.8-38.8 ft (6:30) 38.8-39.8 ft (6:45) 100% Recovery Core Blocked	
40								117.7		39.8 Bottom of Exploration at 39.80 feet below ground surface.	
45											

Remarks:
Auto Hammer #283

Stratification lines represent approximate boundaries between soil types; transitions may be gradual.
* Water level readings have been made at times and under conditions stated. Groundwater fluctuations may occur due to conditions other than those present at the time measurements were made.

Boring No.: BB-HEPR-101

Maine Department of Transportation
Soil/Rock Exploration Log
US CUSTOMARY UNITS

Project: Penobscot River Bridge #2660 carries Route 155 over Penobscot
Location: Howland-Enfield, Maine

Boring No.: BB-HEPR-102
PIN: 16705.00

Driller:	MaineDOT	Elevation (ft.)	126.8	Auger ID/OD:	N/A
Operator:	Giguere/Giles/Daggett	Datum:	NAVD88	Sampler:	Standard Split Spoon
Logged By:	B. Schonewald	Rig Type:	CME 45C	Hammer Wt./Fall:	140#/30"
Date Start/Finish:	8/16/10-8/17/10	Drilling Method:	Cased Wash Boring	Core Barrel:	NQ-2"
Boring Location:	N633348.9 E1762069	Casing ID/OD:	HW & NW	Water Level*:	River Boring
Hammer Efficiency Factor: 0.84		Hammer Type:	Automatic ☒ Hydraulic ☐ Rope & Cathead ☐		

Definitions:
D = Split Spoon Sample
MD = Unsuccessful Split Spoon Sample attempt
U = Thin Wall Tube Sample
MU = Unsuccessful Thin Wall Tube Sample attempt
V = Insitu Vane Shear Test
MV = Unsuccessful Insitu Vane Shear Test attempt
R = Rock Core Sample
SSA = Solid Stem Auger
HSA = Hollow Stem Auger
RC = Roller Cone
WOH = weight of 140lb. hammer
WOR = weight of rods
WOIP = Weight of one person
S_u = Insitu Field Vane Shear Strength (psf)
T_v = Pocket Torvane Shear Strength (psf)
q_p = Unconfined Compressive Strength (ksf)
N-uncorrected = Raw field SPT N-value
Hammer Efficiency Factor = Annual Calibration Value
N_{60} = SPT N-uncorrected corrected for hammer efficiency
N_{60} = (Hammer Efficiency Factor/60%)*N-uncorrected
$S_{u(lab)}$ = Lab Vane Shear Strength (psf)
WC = water content, percent
LL = Liquid Limit
PL = Plastic Limit
PI = Plasticity Index
G = Grain Size Analysis
C = Consolidation Test

Depth (ft.)	Sample No.	Pen./Rec. (in)	Sample Depth (ft.)	Blows (/6 in) Shear Strength (psf) or RQD (%)	N-uncorrected	N_{60}	Casing Blows	Elevation (ft.)	Graphic Log	Visual Description and Remarks	Laboratory Testing Results/ AASHTO and Unified Class.
0	1D	24/5	0.0 - 2.0	1/2/11/10	13	18				Brown-grey, medium dense, fine to coarse sandy GRAVEL, trace silt, (Alluvium).	G#207067 A-1-a, GP WC=10.2%
							67				
							78				
							76				
							129	122.8		4.0	
5							118				
	2D	24/11	6.0 - 8.0	22/14/12/11	26	36	72			Grey, dense, fine to medium SAND, some gravel, little to some silt, trace coarse sand, (Alluvium).	
							71				
							64				
							76				
10							82				
	3D	24/9	11.0 - 13.0	14/19/17/20	36	50	73			Grey, dense, fine to coarse SAND, some gravel, little to some silt, (Alluvium).	
							93				
							125				
							134				
15							168				
	4D	24/12	16.0 - 18.0	16/36/33/34	69	97	123			Grey, very dense, fine to coarse SAND, some gravel, little silt, (Alluvium).	G#207068 A-1-b, SW-SM WC=11.7%
							194				
							252				
							270				
20							432				
	5D	9.6/3	21.0 - 21.8	21/50(3.6")	---			104.8		Brownish-grey, very dense, fine to coarse sandy GRAVEL, trace to little silt, (Alluvium). Attempt to roller cone ahead, solid at 21.8 ft bgs. Telescoped NW Casing, drive and washout to 22.0 ft bgs. 22.0	
	R1	45.6/32	22.0 - 25.8	RQD = 11%			NQ-2	103.9		R1: Top 0.9 ft. Boulder underlain by Gravel. 22.9 Top of Bedrock at Elev. 103.9 ft. R1: Bedrock: Grey, fine-grained, medium hard, fresh to slightly weathered, thinly bedded, calcareous muscovite PHYLLITE. Bedding high angle to vertical, highly undulating on small scale. Close, high angle, planar to undulating, smooth to rough, fresh to discolored, tight to open, breaks along bedding. Mud seam at 23.1 to 23.4 ft. Highly fractured at 24.8 ft. Rock Mass Quality is Very Poor. [Vassalboro Formation] R1: Core Times (min:sec) 22.0-23.0 ft (2:10) 23.0-24.0 ft (2:10) 24.0-25.0 ft (3:55) 25.0-25.8 ft (8:15) 70% Recovery	
25	R2	22.8/20	25.8 - 27.7	RQD = 0%						R2: Bedrock: Same as R1, except fresh, highly fractured entire run. 80% Recovery. Core Times not recorded.	
	R3	60/60	27.7 - 32.7	RQD = 50%						R3: Bedrock: Grey, fine-grained, medium hard, fresh, thinly bedded, calcareous muscovite PHYLLITE. Bedding high angle to vertical, highly undulating on small scale. Close to moderate, high angle upper and lower run and low angle middle run, undulating, smooth to rough, fresh, tight breaks along bedding. Highly fractured at 32.4 ft. Rock Mass Quality is Poor. [Vassalboro Formation] R3: Core Times (min:sec) 28.0-29.0 ft (2:40) 29.0-30.0 ft (2:30) 30.0-31.0 ft (2:25) 31.0-32.7 ft (2:45) 100% Recovery	
30								94.1		32.7 Bottom of Exploration at 32.70 feet below ground surface.	
35											
40											
45											

Remarks:
Bridge Deck to mudline, 33.1 ft. Bridge Deck Core 9 in, no asphalt.

Stratification lines represent approximate boundaries between soil types; transitions may be gradual.
* Water level readings have been made at times and under conditions stated. Groundwater fluctuations may occur due to conditions other than those present at the time measurements were made.

Boring No.: BB-HEPR-102

Maine Department of Transportation
Soil/Rock Exploration Log
US CUSTOMARY UNITS

Project: Penobscot River Bridge #2660 carries Route 155 over Penobscot
Location: Howland-Enfield, Maine

Boring No.: BB-HEPR-103
PIN: 16705.00

Driller:	Northern Test Boring	Elevation (ft.)	127.0	Auger ID/OD:	5" Solid Stem
Operator:	Mike Nadeau/Ty Whitworth	Datum:	NAVD88	Sampler:	Standard Split Spoon
Logged By:	B. Wilder	Rig Type:	Diedrich D-50 Track	Hammer Wt./Fall:	140#/30"
Date Start/Finish:	8/17/10; 08:00-16:00	Drilling Method:	Cased Wash Boring	Core Barrel:	NQ-2"
Boring Location:	N633430.5 E1762334	Casing ID/OD:	HW	Water Level*:	River Boring
Hammer Efficiency Factor: 0.678		Hammer Type:	Automatic ☒ Hydraulic ☐ Rope & Cathead ☐		

Definitions:
D = Split Spoon Sample
MD = Unsuccessful Split Spoon Sample attempt
U = Thin Wall Tube Sample
MU = Unsuccessful Thin Wall Tube Sample attempt
V = Insitu Vane Shear Test
MV = Unsuccessful Insitu Vane Shear Test attempt
R = Rock Core Sample
SSA = Solid Stem Auger
HSA = Hollow Stem Auger
RC = Roller Cone
WOH = weight of 140lb. hammer
WOR = weight of rods
WOIP = Weight of one person
S_u = Insitu Field Vane Shear Strength (psf)
T_v = Pocket Torvane Shear Strength (psf)
q_p = Unconfined Compressive Strength (ksf)
N-uncorrected = Raw field SPT N-value
Hammer Efficiency Factor = Annual Calibration Value
N_{60} = SPT N-uncorrected corrected for hammer efficiency
N_{60} = (Hammer Efficiency Factor/60%)*N-uncorrected
$S_{u(lab)}$ = Lab Vane Shear Strength (psf)
WC = water content, percent
LL = Liquid Limit
PL = Plastic Limit
PI = Plasticity Index
G = Grain Size Analysis
C = Consolidation Test

Depth (ft.)	Sample No.	Pen./Rec. (in)	Sample Depth (ft.)	Blows (/6 in) Shear Strength (psf) or RQD (%)	N-uncorrected	N_{60}	Casing Blows	Elevation (ft.)	Graphic Log	Visual Description and Remarks	Laboratory Testing Results/ AASHTO and Unified Class.
0	1D	24/8	0.0 - 2.0	6/9/17/10	26	29	32			Grey-brown, saturated, medium dense, fine to coarse sandy GRAVEL, trace silt, (Alluvium).	G#207069 A-1-a, GW WC=9.9%
							105				
							204				
	2D	24/13	3.5 - 5.5	26/31/20/18	51	58	152			Grey, saturated, very dense, GRAVEL, some fine to coarse sand, trace silt, (Alluvium). Roller Coned ahead from 3.5-8.5 ft bgs.	G#207070 A-1-a, GW WC=7.7%
							125				
5							88				
							84				
							91				
	3D	24/5	8.5 - 10.5	10/5/3/6	8	9	58			Similar to above, except loose.	
							55				
10							67				
							97				
							88				
	4D	24/4	13.5 - 15.5	5/7/8/7	15	17	51			Similar to above, except medium dense.	
							62				
15							76				
							92				
							174	110.0		17.0	
	5D	24/15	18.5 - 20.5	12/21/32/33	53	60	70			Grey, wet, very dense, fine to coarse SAND, some gravel, trace silt, (Alluvium). Roller Coned ahead to 23.5 ft bgs.	G#207071 A-1-b, SW-SM WC=11.5%
							41				
20							38				
							61				
							143	105.0		22.0	
	6D	24/17	23.5 - 25.5	29/45/33/50	78	88	136			Similar to above but gravelly. Roller Coned ahead to 28.5 ft bgs.	
							92				
25							148				
							250				
							422	100.0		27.0	
	7D	18/16	28.5 - 30.0	22/33/50	83	94	350			Similar to 5D. Roller Coned ahead to 33.5 ft bgs.	G#207072 A-1-a, SW WC=10.1%
							131				
30							112				
							222				
							315				
	8D	16.8/14	33.5 - 34.9	31/39/56(4.8")	---		242			Similar to 5D. Roller Coned ahead to 38.5 ft bgs.	
							139				
35							225				
							232				
							OPEN HOLE	89.4		Open Hole, used 2 cups ACCU-VIS drilling mud. 37.6	
	9D	9.6/8	38.5 - 39.3	40/50(3.6")	---					Grey, wet, very dense, SILT, some fine to coarse sand, little gravel, (Till). Roller Coned ahead to 43.5 ft bgs.	
40											
	10D	15.6/12	43.5 - 44.8	23/43/50(3.6")	---					Similar to above. Roller Coned ahead to 49.0 ft bgs.	G#207073 A-4, SM WC=7.9%
45										Cobble from 48.5-48.9 ft bgs.	
	11D	13.2/7	49.0 - 50.1	15/40/30 (1.2")	---					Similar to above. Roller Coned ahead to 50.1 ft bgs.	
50								76.9		50.1 Top of Bedrock at Elev. 76.9 ft. Roller Coned ahead into Bedrock to 51.1 ft bgs.	
	R1	60/60	51.1 - 56.1	RQD = 93%			NQ-2			Bedrock: Grey, fine-grained, moderately hard, fresh, PHYLLITE, thin, steep bedding planes, joints close to moderatrely close except R2 is a weathered zone, otherwise minor silt in-filling, no iron staining. Rock Mass Quality is Good in R1 and R3, and Very Poor in R2. [Vassalboro Formation] R1: Core Times (min:sec) 51.1-52.1 ft (4:10) 52.1-53.1 ft (5:30) 53.1-54.1 ft (5:00) 54.1-55.1 ft (5:10) 55.1-56.1 ft (5:30) 100% Recovery	
55	R2	15.6/12	56.1 - 57.4	RQD = 0%						R2: Core Times (min:sec) 56.1-57.1 ft (5:45) 57.1-57.4 ft (4:00) 80% Recovery Core Blocked	
	R3	48/48	57.4 - 61.4	RQD = 90%						R3: Core Times not recorded. 100% Recovery	
60								65.6		61.4 Bottom of Exploration at 61.40 feet below ground surface.	
65											

Remarks:
Auto Hammer #283
36.2 ft from Bridge Deck to Ground.

Stratification lines represent approximate boundaries between soil types; transitions may be gradual.
* Water level readings have been made at times and under conditions stated. Groundwater fluctuations may occur due to conditions other than those present at the time measurements were made.

Boring No.: BB-HEPR-103

Maine Department of Transportation
Soil/Rock Exploration Log
US CUSTOMARY UNITS

Project: Penobscot River Bridge #2660 carries Route 155 over Penobscot
Location: Howland-Enfield, Maine

Boring No.: BB-HEPR-104
PIN: 16705.00

Driller:	MaineDOT	Elevation (ft.)	123.4	Auger ID/OD:	N/A
Operator:	Giguere/Giles/Daggett	Datum:	NAVD88	Sampler:	Standard Split Spoon
Logged By:	B. Schonewald	Rig Type:	CME 45C	Hammer Wt./Fall:	140#/30"
Date Start/Finish:	8/17/10-8/18/10	Drilling Method:	Cased Wash Boring	Core Barrel:	NQ-2"
Boring Location:	N633510 E1762593	Casing ID/OD:	HW & NW	Water Level*:	River Boring
Hammer Efficiency Factor: 0.84		Hammer Type:	Automatic ☒ Hydraulic ☐ Rope & Cathead ☐		

Definitions:
D = Split Spoon Sample
MD = Unsuccessful Split Spoon Sample attempt
U = Thin Wall Tube Sample
MU = Unsuccessful Thin Wall Tube Sample attempt
V = Insitu Vane Shear Test
MV = Unsuccessful Insitu Vane Shear Test attempt
R = Rock Core Sample
SSA = Solid Stem Auger
HSA = Hollow Stem Auger
RC = Roller Cone
WOH = weight of 140lb. hammer
WOR = weight of rods
WOIP = Weight of one person
S_u = Insitu Field Vane Shear Strength (psf)
T_v = Pocket Torvane Shear Strength (psf)
q_p = Unconfined Compressive Strength (ksf)
N-uncorrected = Raw field SPT N-value
Hammer Efficiency Factor = Annual Calibration Value
N_{60} = SPT N-uncorrected corrected for hammer efficiency
N_{60} = (Hammer Efficiency Factor/60%)*N-uncorrected
$S_{u(lab)}$ = Lab Vane Shear Strength (psf)
WC = water content, percent
LL = Liquid Limit
PL = Plastic Limit
PI = Plasticity Index
G = Grain Size Analysis
C = Consolidation Test

Depth (ft.)	Sample No.	Pen./Rec. (in)	Sample Depth (ft.)	Blows (/6 in) Shear Strength (psf) or RQD (%)	N-uncorrected	N_{60}	Casing Blows	Elevation (ft.)	Graphic Log	Visual Description and Remarks	Laboratory Testing Results/ AASHTO and Unified Class.
0	1D	24/3	0.0 - 2.0	6/4/8/14	12	17	16			Brown, medium dense, GRAVEL, some fine to coarse sand, trace silt, (River Alluvium).	G#207074 A-1-a, GP WC=10.1%
							52				
							62				
							94				
							131	118.9		4.5	
5							86				
							144				
	2D	16/4	7.0 - 8.3	38/47/50(4")	---		196			Grey, very dense, fine to coarse SAND, some gravel and silt, (Alluvium). ᵃWashed Ahead of casing from 8.0-22.0 ft bgs.	G#207075 A-1-b, SM WC=8.3%
							ᵃWA				
10											
	3D	24/11	12.0 - 14.0	15/19/31/32	50	70				Greyish brown, very dense, fine to coarse SAND, little gravel, trace silt, (Alluvium).	G#239827 A-1-b, SP-SM WC=15.1%
15											
	4D	24/4	17.0 - 19.0	20/19/19/20	38	53				Brown, very dense, gravelly, fine to coarse SAND, trace silt, (Alluvium). Switch to NW Casing at 19.0 ft bgs.	
20											
	5D	24/13	22.0 - 24.0	22/23/32/21	55	77	45			Greyish brown, very dense, gravelly, fine to coarse SAND, trace silt, (Alluvium).	G#239828 A-1-a, SW-SM WC=10.3%
							81				
							108				
25							176				
							162				
	6D	8.4/5	27.0 - 27.7	40/50(2.4")	---		WASH	95.4		Greyish brown, very dense, gravelly, fine to coarse SAND, trace silt, (Alluvium). Roller Cone refusal at 27.8 ft bgs. Attempt rock core. Dropped through boulder at 28.3 ft bgs. 28.0	
							67				
							126				
30							153				
							166				
	7D	24/17	32.0 - 34.0	44/40/48/48	88	123	ᵃWA			Grey, very dense, SILT, some fine to coarse sand, trace gravel, (Till). ᵃWashed Ahead of casing from 32.0-47.0 ft bgs.	G#239829 A-4, ML WC=11.6%
35	8D	9.6/1	37.0 - 37.8	59/56(3.6")	---					Same as above.	
40	9D	9.6/5	42.0 - 42.8	48/50(3.6")	---					Grey, very dense, fine to coarse sandy SILT, trace gravel, (Till).	
45	10D	21.6/20	47.0 - 48.8	35/46/49/50(3.6)	95	133	ᵃWA			Grey, very dense, fine to coarse sandy SILT, trace gravel, (Till). ᵃ Washed ahead to 52.0 ft bgs.	G#239830 A-4, SM WC=8.4%
50										Casing and Roller Cone Refusal at 52.0 ft bgs.	
	R1	60/54	52.0 - 57.0	RQD = 62%			NQ-2	71.4		52.0 Top of Bedrock at Elev. 71.4 ft. R1: Bedrock: Grey, fine-grained, hard, fresh, thinly bedded calcereous muscovite PHYLLITE. Bedding high angle, highly undulating on smaller scale. Moderately spaced, high angle and one low angle, planar to undulating, rough, fresh, tight breaks along bedding. Upper foot more fractured, (close spacing). Rock Mass Quality is Fair. [Vassalboro Formation] R1: Core Times (min:sec) 52.0-53.0 ft (3:30) 53.0-54.0 ft (2:50) 54.0-55.0 ft (2:40) 55.0-56.0 ft (--:--) (Core Time not recorded) 56.0-57.0 ft (2:35) 90% Recovery	
55	R2	60/60	57.0 - 62.0	RQD = 52%						R2: Bedrock: Grey, fine-grained, hard, fresh, thinly bedded calcereous muscovite PHYLLITE. Bedding high angle, highly undulating on small scale. Close, high angle, undulating to stepped, rough, fresh, tight to open breaks along bedding. Fractured at 57.0 to 57.5 ft and 58.8 to 60.0 ft. Rock Mass Quality is Fair. [Vassalboro Formation] R2: Core Times (min:sec) 57.0-58.0 ft (3:00) 58.0-59.0 ft (3:30) 59.0-60.0 ft (4:30) 60.0-61.0 ft (4:00) 61.0-62.0 ft (3:40) 100% Recovery	
60								61.4		62.0 Bottom of Exploration at 62.00 feet below ground surface.	
65											
70											

Remarks:
Bridge Deck to mudline, 42.3 ft. Bridge Deck Core lost through deck.
Deck to waterline 38.2 ft.

Stratification lines represent approximate boundaries between soil types; transitions may be gradual.
* Water level readings have been made at times and under conditions stated. Groundwater fluctuations may occur due to conditions other than those present at the time measurements were made.

Boring No.: BB-HEPR-104

STATE OF MAINE
DEPARTMENT OF TRANSPORTATION
BH-1670(500)X
BRIDGE PLANS
WIN 16705.00
BRIDGE NO. 2660

STATE OF MAINE CHRISTOPHER L. SNOW No. 7275 LICENSED PROFESSIONAL ENGINEER

SIGNATURE 7275
P.E. NUMBER 12-03-14
DATE

	BY	DATE
PROJ. MANAGER	.	
DESIGN-DETAILED	J. BARON	
CHECKED-REVIEWED	C. SNOW	
DESIGN2-DETAILED2	.	.
DESIGN3-DETAILED3	.	.
REVISIONS 1	.	.
REVISIONS 2	.	.
REVISIONS 3	.	.
REVISIONS 4	.	.
FIELD CHANGES	.	.

PENOBSCOT RIVER BRIDGE
PENOBSCOT RIVER
HOWLAND-ENFIELD PENOBSCOT COUNTY

BORING LOGS

SHEET NUMBER
57
OF 127

Maine Department of Transportation
Soil/Rock Exploration Log
US CUSTOMARY UNITS

Project: Penobscot River Bridge #2660
carries Route 155 over Penobscot
Location: Howland-Enfield, Maine

Boring No. BB-HEPR-105
PIN: 16705.00

Driller:	Northern Test Boring	Elevation (ft.)	167.4	Auger ID/OD	5" Solid Stem
Operator:	Mike Nadeau/Ty Whitworth	Datum:	NAVD88	Sampler:	Standard Split Spoon
Logged By:	B. Schonewald	Rig Type:	Diedrich D-50 Track	Hammer Wt./Fall:	140#/30"
Date Start/Finish:	8/19/10; 08:00-14:15	Drilling Method	Cased Wash Boring	Core Barrel:	NQ-2"
Boring Location:	N639575.2 E1762800	Casing ID/OD	HW	Water Level*	None Observed
Hammer Efficiency Factor: 0.678		Hammer Type:	Automatic ☒ Hydraulic ☐ Rope & Cathead ☐		

Definitions:
SS = Split Spoon Sample
MS = Unsuccessful Split Spoon Sample attempt
U = Thin Wall Tube Sample
MU = Unsuccessful Thin wall Tube Sample attempt
V = Insitu Vane Shear Test
MV = Unsuccessful Insitu Vane Shear Test attempt
R = Rock Core Sample
SSA = Solid Stem Auger
HSA = Hollow Stem Auger
RC = Roller Cone
WOH = weight of 140lb. hammer
WOR = weight of rods
WOA = Weight of one person

S_u = Insitu/Field Vane Shear Strength (psf)
T_v = Pocket Torvane Shear Strength (psf)
q_p = Unconfined Compressive Strength (psf)
Nuncorrected = Raw Field SPT N-value
Hammer Efficiency Factor = Annual Calibration Value
N_{60} = SPT N-uncorrected corrected for hammer efficiency
N_{60} = (Hammer Efficiency Factor/60%)*N-uncorrected

S_u(lab) = Lab Vane Shear Strength (psf)
w_c = water content, percent
LL = Liquid Limit
PL = Plastic Limit
PI = Plasticity Index
G = Grain Size Analysis
C = Consolidation Test

Depth (ft.)	Sample No.	Pen./Rec. (in)	Sample Depth (ft.)	Blows (/6 in) Shear Strength (psf) or RQD (%)	N-uncorrected	N_{60}	Casing Blows	Elevation (ft.)	Graphic Log	Visual Description and Remarks	Laboratory Testing Results* AASHTO Soil Group Classification	
0							SSA	166.6		ASPHALT. 0.8		
	1D	24/6	1.0 - 3.0	17/14/15/15	29	33				Brown, damp, dense, fine to coarse SAND, some gravel, trace silt, (Fill).	GA239831 A-1-b, SW-SM WC=2.7%	
5	2D	24/2	5.0 - 7.0	8/8/9/8	17	19				Brown, dry, medium dense, gravelly fine to coarse SAND, trace silt, piece of gravel in tip of spoon, (Fill).		
10	3D	24/16	10.0 - 12.0	6/10/7/5	17	19	62			Brown, damp, medium dense, fine to coarse SAND, some gravel, trace silt, (Fill).	GA239832 A-1-b, SW-SM WC=7.5%	
							81					
							136			Possible old asphalt layer at 13.0 ft based on wash water.		
							126					
							148					
15	4D/4B	24/12	15.0 - 17.0	8/5/6/7	11	12	38	150.2		4D/A (15.0-15.2) Brown, moist, CLAY-SILT mixed with fill. 15.2 4D/B (15.2-17.0) Brown, moist, stiff, CLAY-SILT, trace fine to medium sand, mottled, (Glaciomarine).	GA239833 A-6, CL WC=24.1% LL=33 PL=21 PI=12	
							45					
							66					
							81					
							72	148.4		Driller notes material change at 19.0 ft bgs. 19.0 Dark brown and black, moist, loose, fine to medium SAND, little silt, (Glaciomarine).		
20	5D	24/10	20.0 - 22.0	2/2/2/3	4	5	40				GA239834 A-2-4, SM WC=18.5%	
							44					
							53					
							60					
							68					
25	6D	24/7	25.0 - 27.0	3/4/4/5	8	9	45			Same as above.		
							59					
							82					
							99	138.8		Drilling behavior suggests material change at 28.6 ft, boney material. 28.6		
							194					
30	7D	24/7	30.0 - 32.0	11/15/17/18	32	36	74			Brown, dense, gravelly fine to coarse SAND, some silt, (Till).		
							104					
							208					
							338					
							286					
35	8D	24/12	35.0 - 37.0	39/21/38/36	59	67	HSA			Brown, very dense, gravelly, fine to coarse SAND, little silt, (Till). Hammer Freeze to 39.8 ft bgs.	GA239835 A-1-b, SM WC=9.1%	
	R1	60/54	39.8 - 44.8	RQD = 35%				127.6		Top of Bedrock at Elev. 127.6 ft. 39.8		
40										R1 Bedrock: Grey, fine-grained, hard, fresh to slightly weathered, calcareous METASILTSTONE. Original bedding highly disturbed to not discernible. Quartz inclusions, close to moderately spaced, moderately dipping and low angle, undulating, rough, discolored, open fractures. Rock Mass Quality is Poor. (Vassalboro Formation)		
	R2	42/38	44.8 - 48.3	RQD = 86%						R1 Core Times (min:sec) 39.8-40.8 ft (4:00) 40.8-41.8 ft (6:30) 41.58-42.8 ft (7:40) 42.8-43.8 ft (6:40) 43.8-44.8 ft (8:30) 90% Recovery		
45												
	R3	24/22	48.3 - 50.3	RQD = 71%						R2 Bedrock: Same as R1, except original bedding not discernible, more quartz inclusions, and fractures are fresh to discolored, two drill breaks at 47.15 and 47.65 ft. Rock Mass Quality is Good.		
								117.1		90% Recovery		
50										R3 Bedrock: Same as R2, one drill break at 49.6 ft. Rock Mass Quality is Fair. 50.3 Bottom of Exploration at 50.30 feet below ground surface.		
55												

Remarks:
Auto Hammer #283

Stratification lines represent approximate boundaries between soil types; transitions may be gradual.
* Water level readings have been made at times and under conditions stated. Groundwater fluctuations may occur due to conditions other than those present at the time measurements were made.

Boring No. BB-HEPR-105

STATE OF MAINE
DEPARTMENT OF TRANSPORTATION

BH-1670(500)X

WIN 16705.00

BRIDGE NO. 2660

BRIDGE PLANS

STATE OF MAINE · CHRISTOPHER L. SNOW · No. 7275 · LICENSED · PROFESSIONAL ENGINEER

	BY	DATE
PROJ. MANAGER		
DESIGN-DETAILED	J. BARON	
CHECKED-REVIEWED	C. SNOW	
DESIGN2-DETAILED2		
DESIGN3-DETAILED3		
REVISIONS 1		
REVISIONS 2		
REVISIONS 3		
REVISIONS 4		
FIELD CHANGES		

SIGNATURE 7275

P.E. NUMBER

12-03-14

DATE

PENOBSCOT RIVER BRIDGE
PENOBSCOT RIVER
HOWLAND-ENFIELD PENOBSCOT COUNTY

BORING LOGS

SHEET NUMBER
58
OF 127

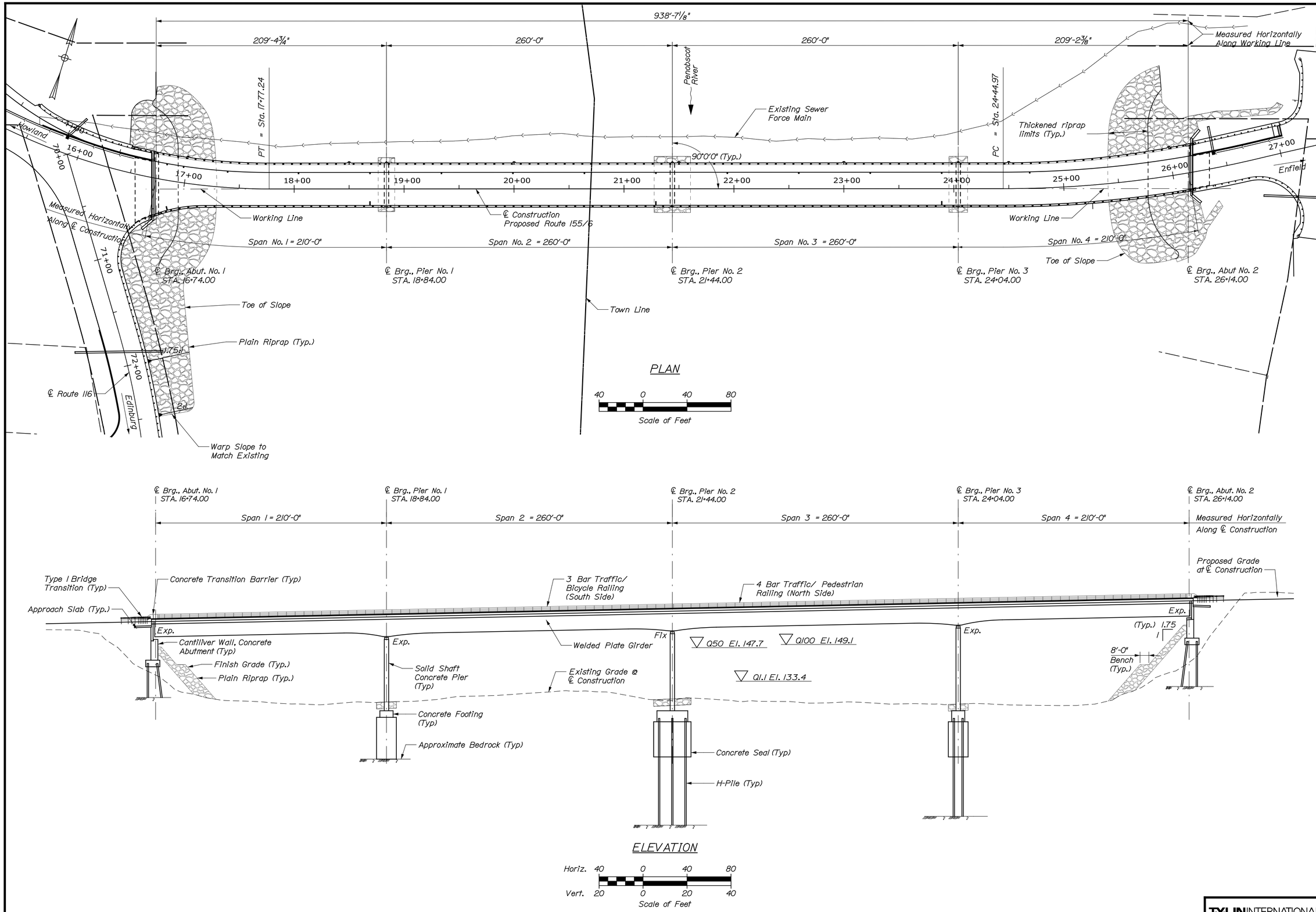

T·Y·LIN INTERNATIONAL

STATE OF MAINE
DEPARTMENT OF TRANSPORTATION

BRIDGE PLANS

WIN 16705.00

BRIDGE NO. 2660

PROJ. MANAGER			
DESIGN-DETAILED	DSM	SAM	
CHECKED-REVIEWED	RMH	RMH	
DESIGN2-DETAILED2			
DESIGN3-DETAILED3			
REVISIONS 1			
REVISIONS 2			
REVISIONS 3			
REVISIONS 4			
FIELD CHANGES			

SIGNATURE

P.E. NUMBER

DATE

PENOBSCOT RIVER BRIDGE
PENOBSCOT RIVER
HOWLAND-ENFIELD PENOBSCOT COUNTY

BRIDGE PLAN AND ELEVATION

SHEET NUMBER

59

OF 127

Filename: ...\MSTA\XXX_Plan_Elevation.dgn Division: Username: Date:12/16/2014

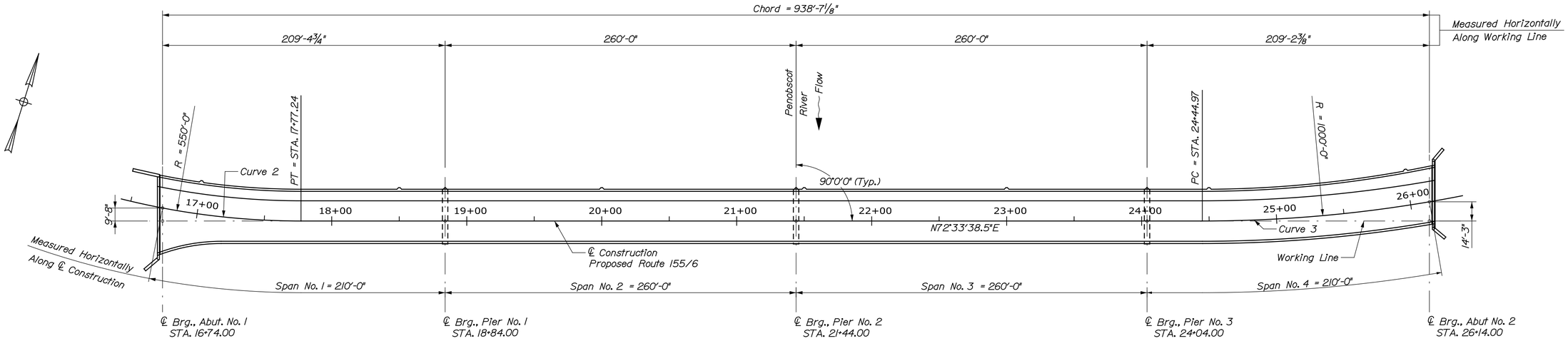

GEOMETRIC LAYOUT PLAN

40 0 40 80
Scale of Feet

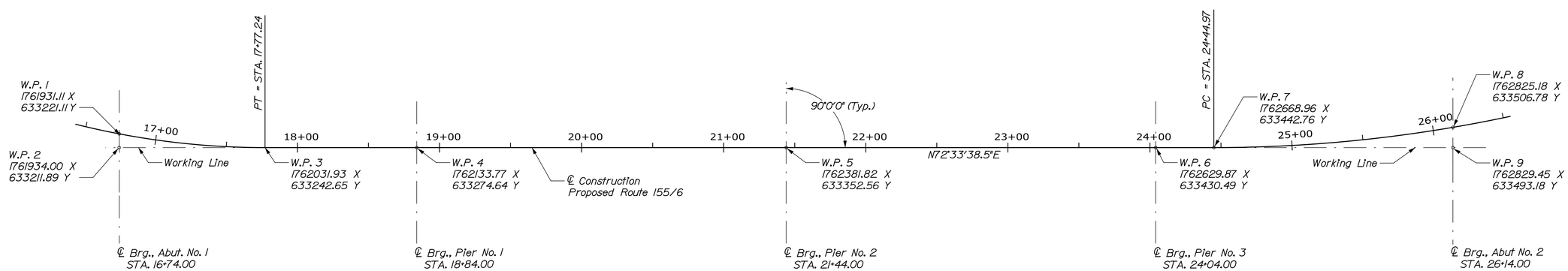

LAYOUT COORDINATES PLAN

40 0 40 80
Scale of Feet

T·Y·LIN INTERNATIONAL

STATE OF MAINE
DEPARTMENT OF TRANSPORTATION

BRIDGE PLANS

WIN 16705.00

BRIDGE NO. 2660

SIGNATURE

P.E. NUMBER

DATE

	N.I.B	BY	DATE
PROJ. MANAGER			
DESIGN-DETAILED	DSM	SAM	. .
CHECKED-REVIEWED	RMH	RMH	. .
DESIGN2-DETAILED2			
DESIGN3-DETAILED3			
REVISIONS 1			
REVISIONS 2			
REVISIONS 3			
REVISIONS 4			
FIELD CHANGES			

PENOBSCOT RIVER BRIDGE
PENOBSCOT RIVER
HOWLAND-ENFIELD PENOBSCOT COUNTY

GEOMETRIC LAYOUT PLAN

SHEET NUMBER
60
OF 127

Filename: ...\XXX_Geometric_Layout_Plan.dgn Division: Username: Date:12/16/2014

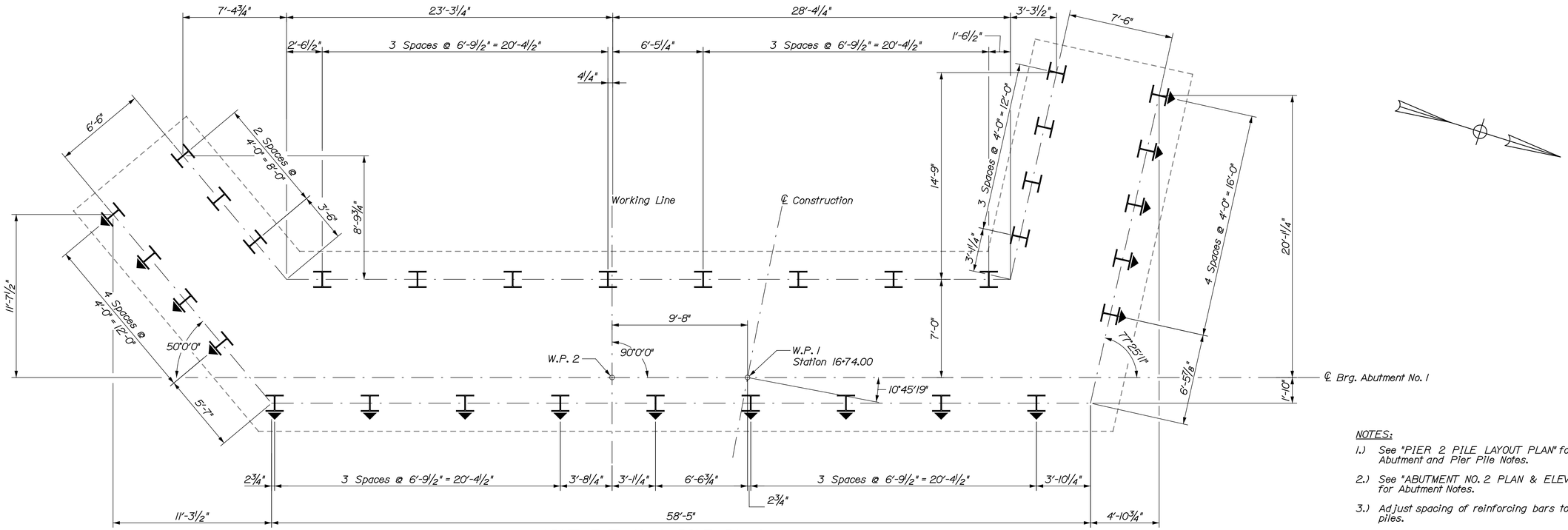

ABUTMENT NO. 1 PILE PLAN

NOTES:

1.) See "PIER 2 PILE LAYOUT PLAN" for Abutment and Pier Pile Notes.

2.) See "ABUTMENT NO. 2 PLAN & ELEVATION" for Abutment Notes.

3.) Adjust spacing of reinforcing bars to avoid piles.

4.) See "ABUTMENT & WINGWALL SECTIONS" and "ABUTMENT NO. 1 NW WING ELEVATION" sheets for footing sections.

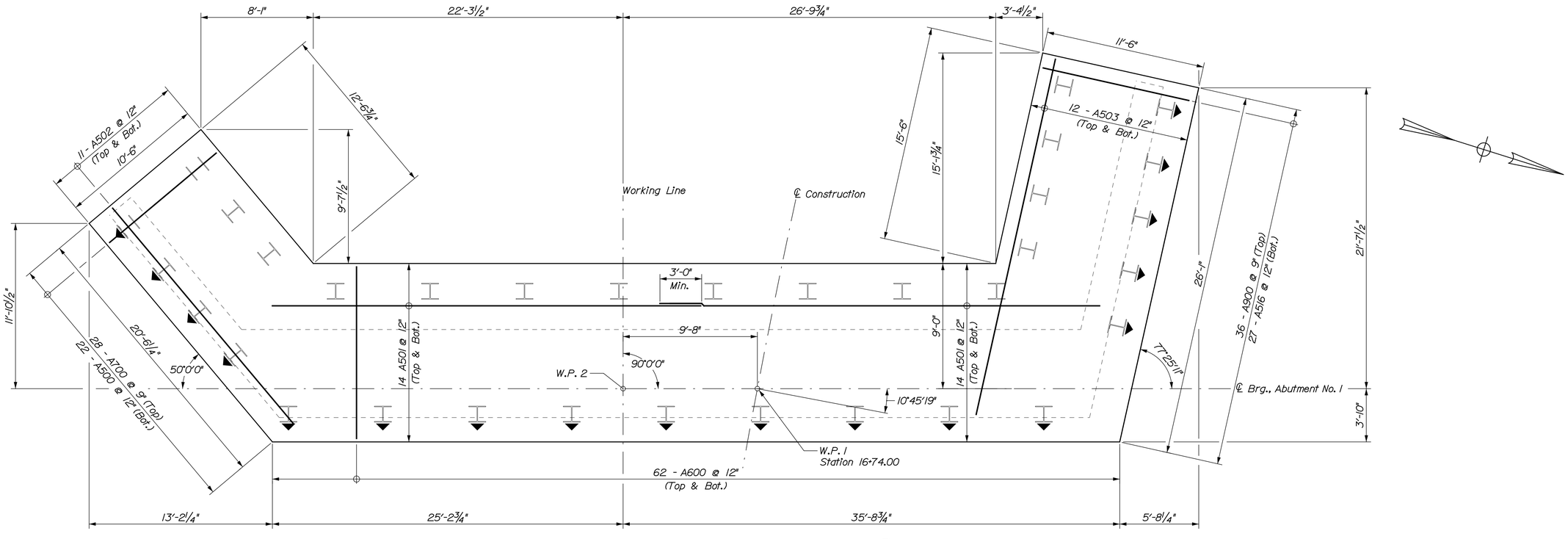

ABUTMENT NO. 1 FOOTING PLAN

T·Y·LIN INTERNATIONAL

STATE OF MAINE
DEPARTMENT OF TRANSPORTATION

BRIDGE PLANS

WIN 16705.00

BRIDGE NO. 2660

PROJ. MANAGER	N.E.B.	BY	DATE
DESIGN-DETAILED	JKO	TJP	.
CHECKED-REVIEWED	TJP	JKO	.
DESIGN2-DETAILED2			
DESIGN3-DETAILED3			
REVISIONS 1			
REVISIONS 2			
REVISIONS 3			
REVISIONS 4			
FIELD CHANGES			

SIGNATURE

P.E. NUMBER

DATE

PENOBSCOT RIVER BRIDGE
PENOBSCOT RIVER
HOWLAND-ENFIELD PENOBSCOT COUNTY

ABUTMENT NO. 1
PILE & FOOTING PLAN

SHEET NUMBER
61
OF 127

Filename: ...\XXX_Abutment_1_Pile_Foot_Plan.dgn Division: Username: Date:12/16/2014

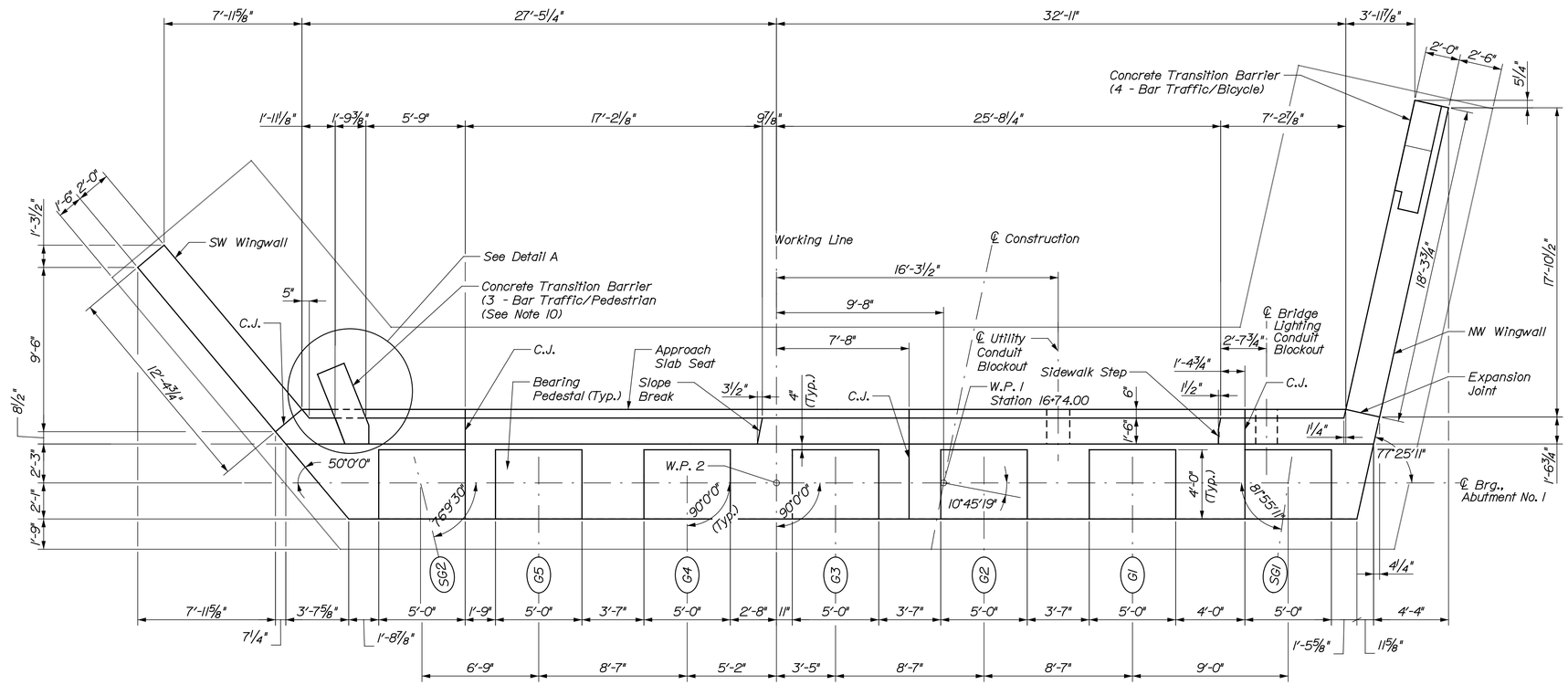

ABUTMENT NO. 1 PLAN

(Piles not shown for clarity)

Flow

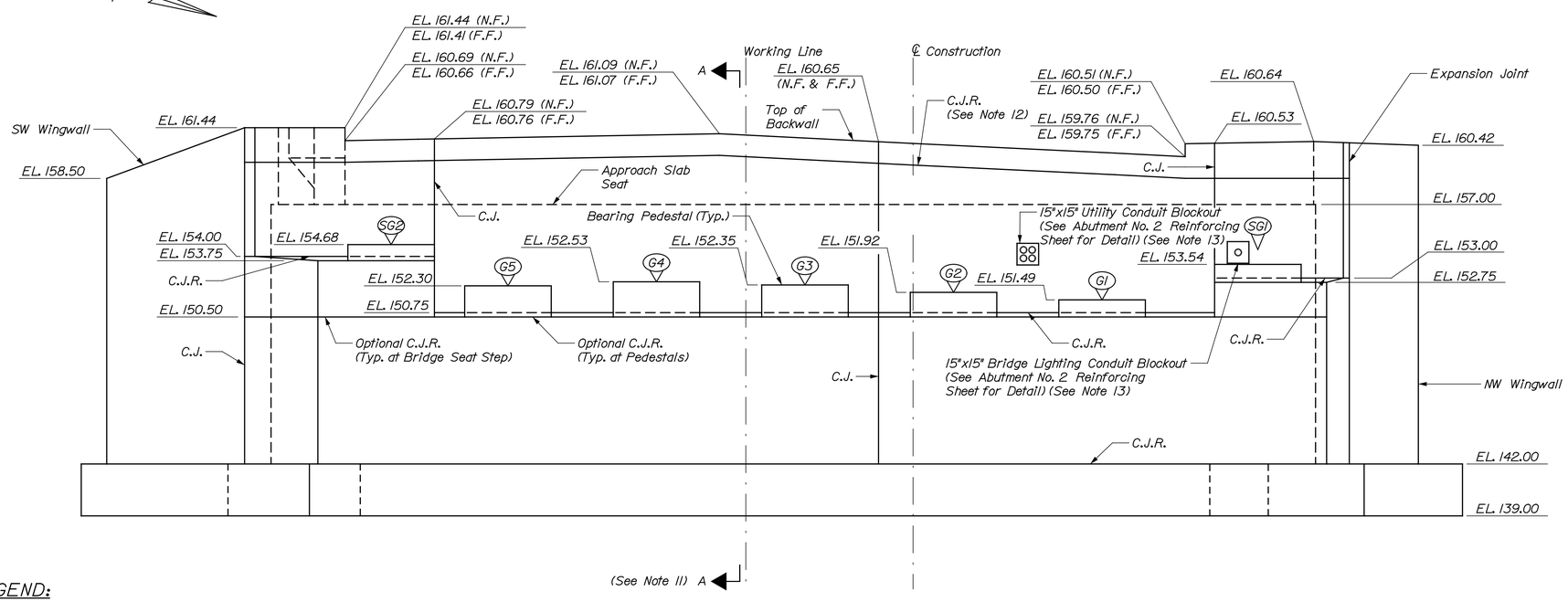

ABUTMENT NO. 1 ELEVATION

(Piles not shown for clarity)

ABUTMENTS NOTES:

1. Reinforcing steel shall have a minimum concrete cover of 2 inches in the wall and 3 inches cover in the footings unless otherwise noted.
2. Cover joints where waterstops are not required in accordance with Standard Detail 502 (01).
3. Place 4 inch diameter drains in breastwall and wingwalls at 10 feet maximum spacing. The exact location will be determined by the Resident.
4. Construct French Drains behind the abutments and wingwalls in accordance with Standard Specification Section 512, French Drains.
5. Structural Earth Excavation, Abutments and Retaining Walls, required more than 12 inches below the bottom of the structure, will be paid for in accordance with Standard Specifications Section 206, Structural Excavation.
6. Abutment, wingwalls, and their footings shall be backfilled with Granular Borrow. Pay limits will be the structural excavation limits in cut areas and a vertical plane located 10 feet behind the walls in fill areas.
7. The Contractor shall install Transition Barrier vertical closed stirrups as shown on Concrete Transition Barrier sheets prior to the placement of the curb concrete.
8. Pedestal Elevations are approximate. The actual elevations shall be adjusted to accommodate the bearings supplied by the Contractor. The elevations given assume an overall bearing height of 5⅜" for Girders SG1 & SG2 and 6⅞" for Girders 1-5.
9. See "Concrete Transition Barrier 2" for Concrete Transition Barrier Details.
10. See "Abutment & Wingwall Sections" for Abutment Section.
11. Details for Expansion & Construction Joints are Shown in Standard Details Section 502(01).
12. Coordinate location of construction joint with placement of Expansion Device Finger-Joint.
13. Coordinate vertical location of utility and bridge lighting conduit blockouts with placement of bridge supported utility and bridge lighting conduits. Place to clear bottom of curtain trough by a minimum of 3". Adjust spacing of reinforcement at blockouts.

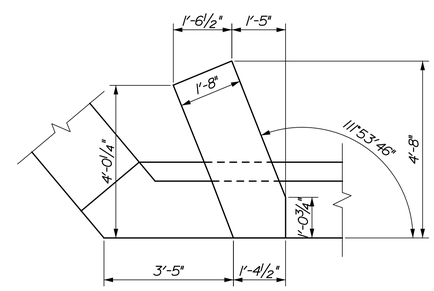

Dimensions shown at top of Concrete Transition Barrier unless noted otherwise.

DETAIL A

LEGEND:

C.J. = Construction Joint
C.J.R. = Construction Joint, Roughen Surface ¼" profile Min. (Typ.)
W.P. = Working Point

STATE OF MAINE
DEPARTMENT OF TRANSPORTATION

BRIDGE PLANS

WIN 16705.00

BRIDGE NO. 2660

PROJ. MANAGER	NLB	BY	DATE
DESIGN-DETAILED	JKO	SAM	5/14
CHECKED-REVIEWED	TJP	RMH	.
DESIGN2-DETAILED2			
DESIGN3-DETAILED3			
REVISIONS 1			
REVISIONS 2			
REVISIONS 3			
REVISIONS 4			
FIELD CHANGES			

SIGNATURE

P.E. NUMBER

DATE

PENOBSCOT RIVER BRIDGE
PENOBSCOT RIVER
HOWLAND-ENFIELD PENOBSCOT COUNTY

ABUTMENT NO. 1
PLAN & ELEVATION

SHEET NUMBER
62
OF 127

T·Y·LIN INTERNATIONAL

Date:12/16/2014 Username: Division: Filename: ...\XXX_Abutment_1_Plan_Elev.dgn

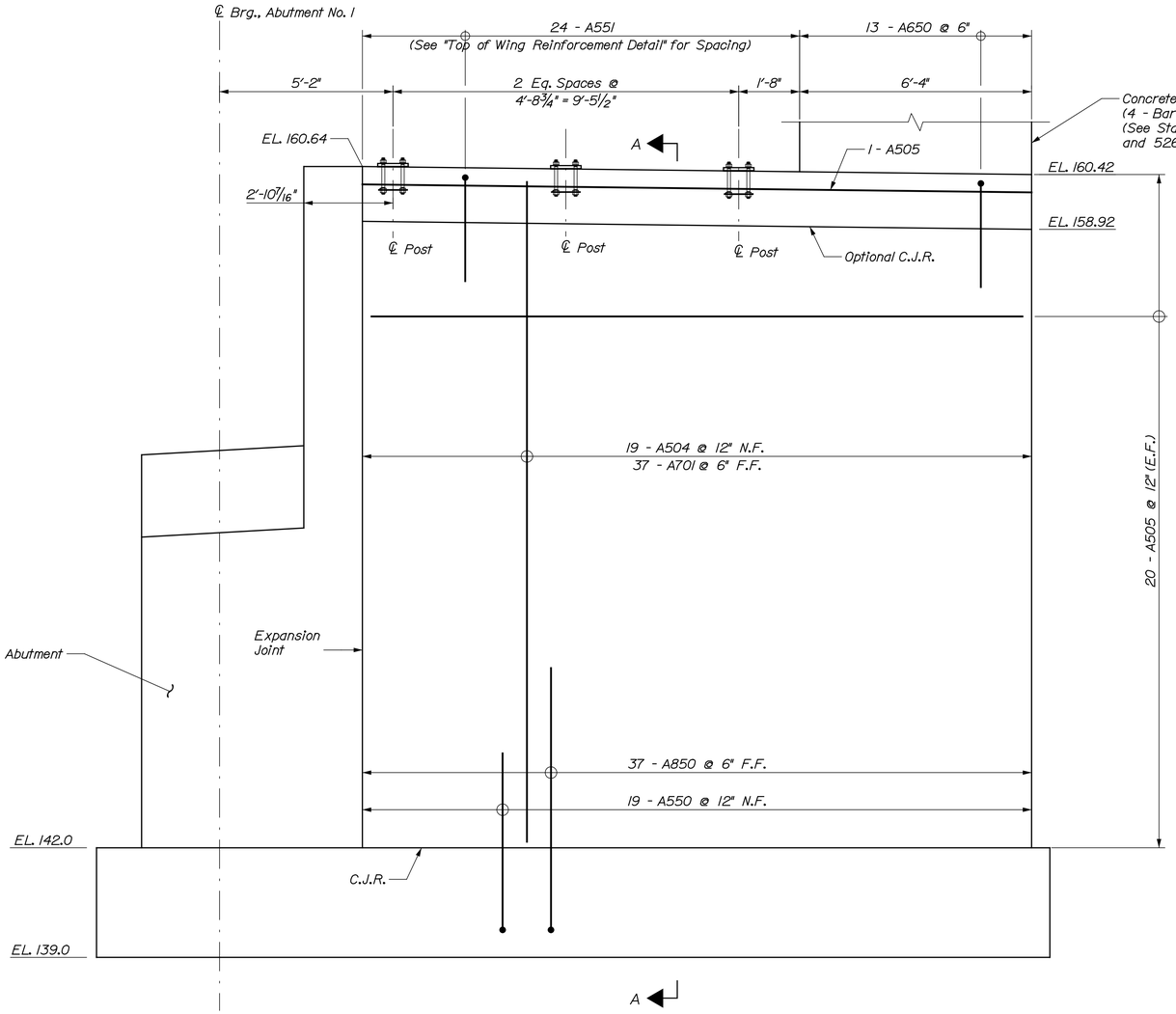

NORTHWEST WINGWALL ELEVATION

(Footing and Abutment reinforcement not shown for clarity)
(Piles not shown for clarity)

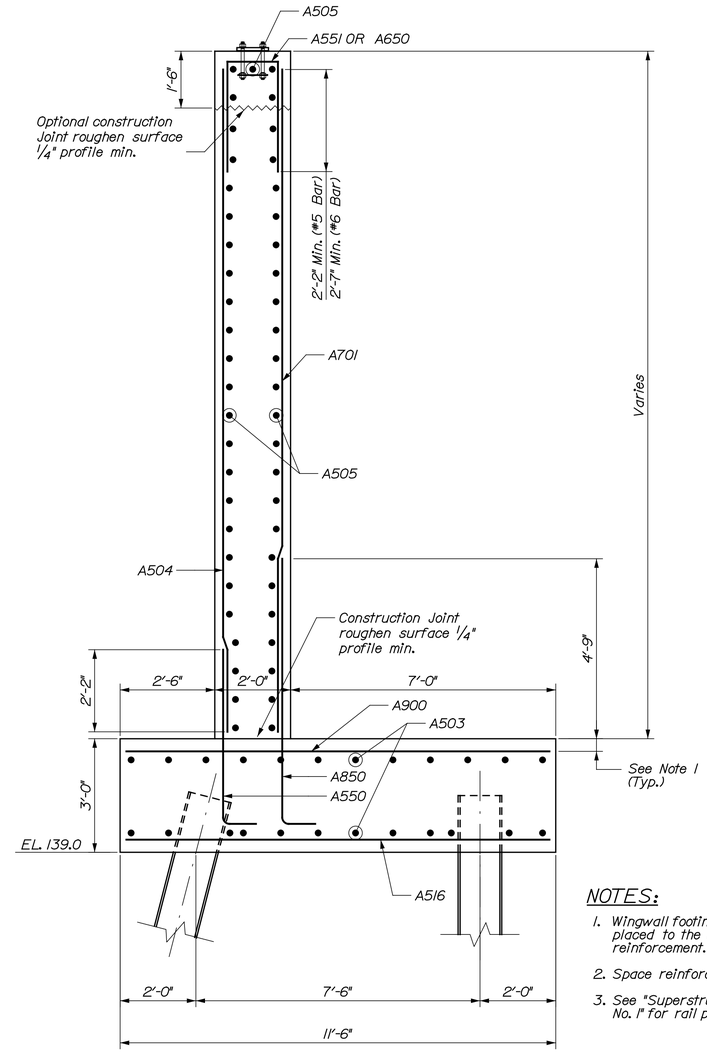

SECTION A-A

NOTES:

1. Wingwall footing reinforcement will be placed to the inside of the abutment reinforcement.
2. Space reinforcement to avoid piles.
3. See "Superstructure Slab - Spans No. 1" for rail post spacings.

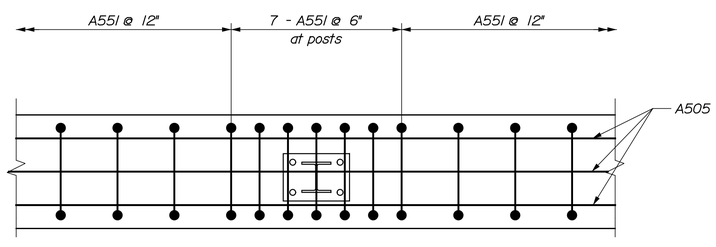

TOP OF WING REINFORCEMENT DETAIL

LEGEND:

C.J.R. = Construction Joint, Roughen Surface ¼" profile Min. (Typ.)

Date:12/16/2014 Username: Filename: ...\XXX_Abutment_1_NW_Wing_Elevation.dgn Division:

STATE OF MAINE
DEPARTMENT OF TRANSPORTATION

BRIDGE PLANS

WIN 16705.00

BRIDGE NO. 2660

PROJ. MANAGER	N.B.	BY	DATE
DESIGN-DETAILED	T.P.	SAM	.
CHECKED-REVIEWED	RMH	RMH	.
DESIGN2-DETAILED2			
DESIGN3-DETAILED3			
REVISIONS 1			
REVISIONS 2			
REVISIONS 3			
REVISIONS 4			
FIELD CHANGES			

SIGNATURE

P.E. NUMBER

DATE

PENOBSCOT RIVER BRIDGE
PENOBSCOT RIVER
HOWLAND-ENFIELD PENOBSCOT COUNTY

ABUTMENT NO. 1
NW WING ELEVATION

TYLIN INTERNATIONAL

SHEET NUMBER

63

OF 127

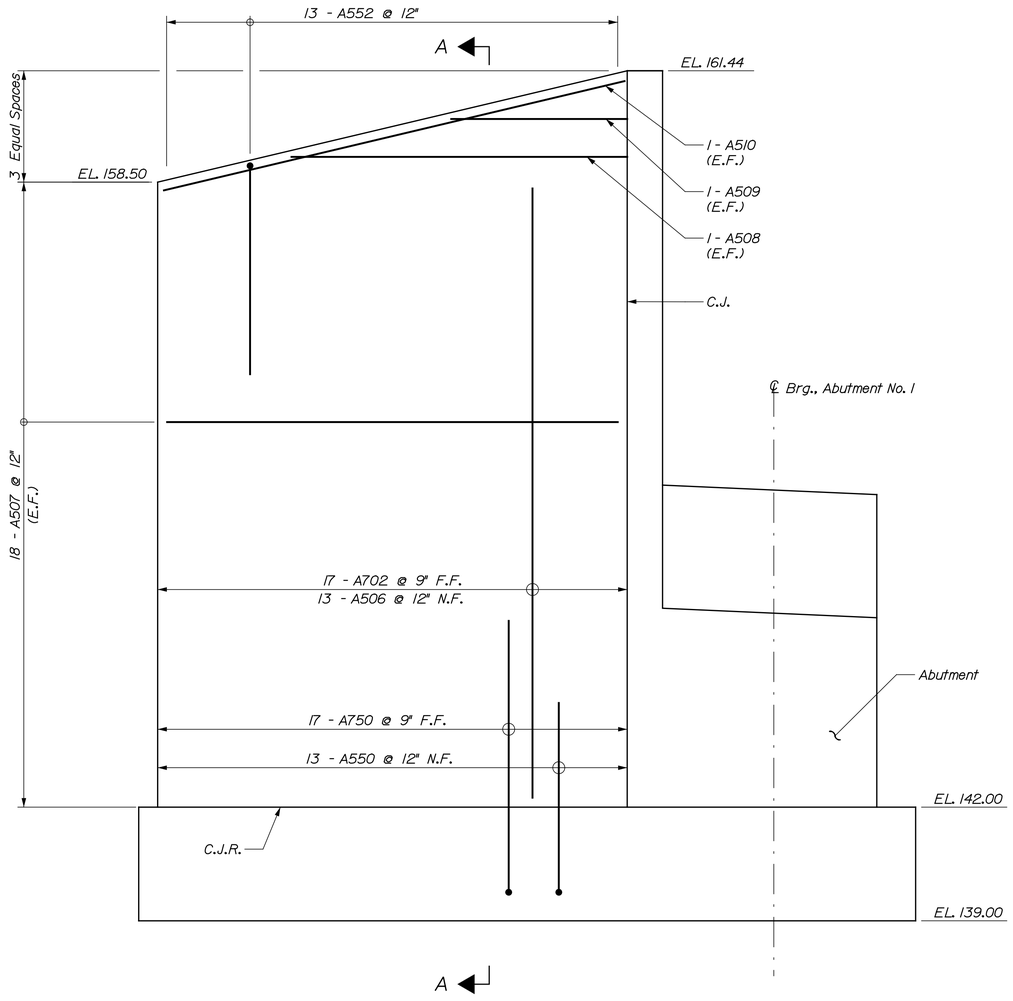

Note:
See "Abutment & Wingwall Sections" for Wingwall Section.

SW WINGWALL REINFORCING ELEVATION

(Footing and Abutment reinforcement not shown for clarity)
(Piles not shown for clarity)

LEGEND:

C.J. = Construction Joint
C.J.R. = Construction Joint, Roughen Surface 1/4" profile Min. (Typ.)

Filename: ...\XXX_Abutment_1_SW_Wing_Elevation.dgn
Division:
Username:
Date:12/16/2014

STATE OF MAINE
DEPARTMENT OF TRANSPORTATION

BRIDGE PLANS

WIN 16705.00

BRIDGE NO. 2660

PROJ. MANAGER		N.B.	BY	DATE
DESIGN-DETAILED	TJP		SAM	.
CHECKED-REVIEWED	TJP		RMH	.
DESIGN2-DETAILED2				
DESIGN3-DETAILED3				
REVISIONS 1				
REVISIONS 2				
REVISIONS 3				
REVISIONS 4				
FIELD CHANGES				

SIGNATURE

P.E. NUMBER

DATE

PENOBSCOT RIVER BRIDGE
PENOBSCOT RIVER
HOWLAND-ENFIELD PENOBSCOT COUNTY

ABUTMENT NO. 1
SW WING ELEVATION

T·Y·LIN INTERNATIONAL

SHEET NUMBER
64
OF 127

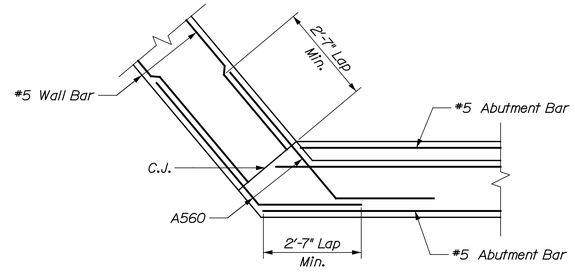

PARTIAL SECTION B-B
(Vertical reinforcement not shown for clarity)

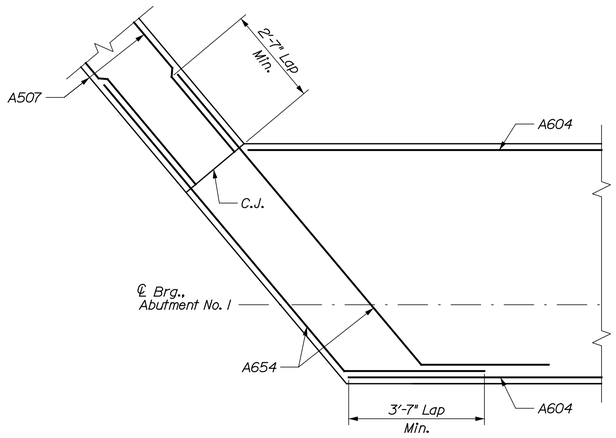

PARTIAL SECTION A-A
(Vertical reinforcement not shown for clarity)

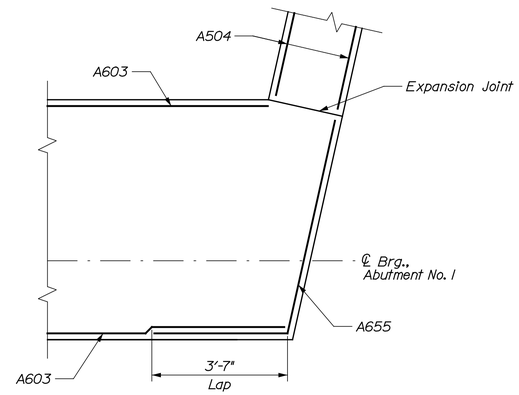

PARTIAL SECTION C-C
(Vertical reinforcement not shown for clarity)

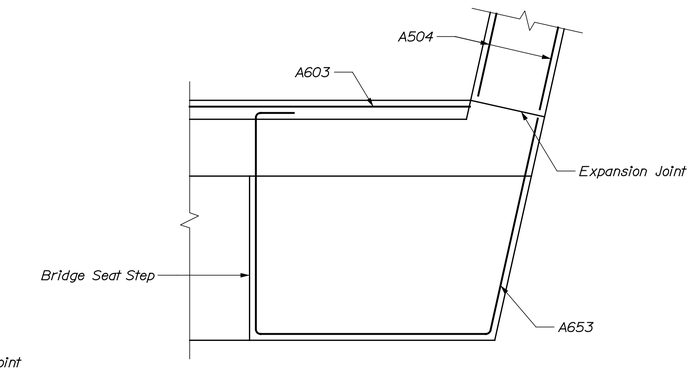

PARTIAL SECTION D-D
(Vertical reinforcement not shown for clarity)
(Placement detail for A653 shown. Placement detail for A652 similiar)

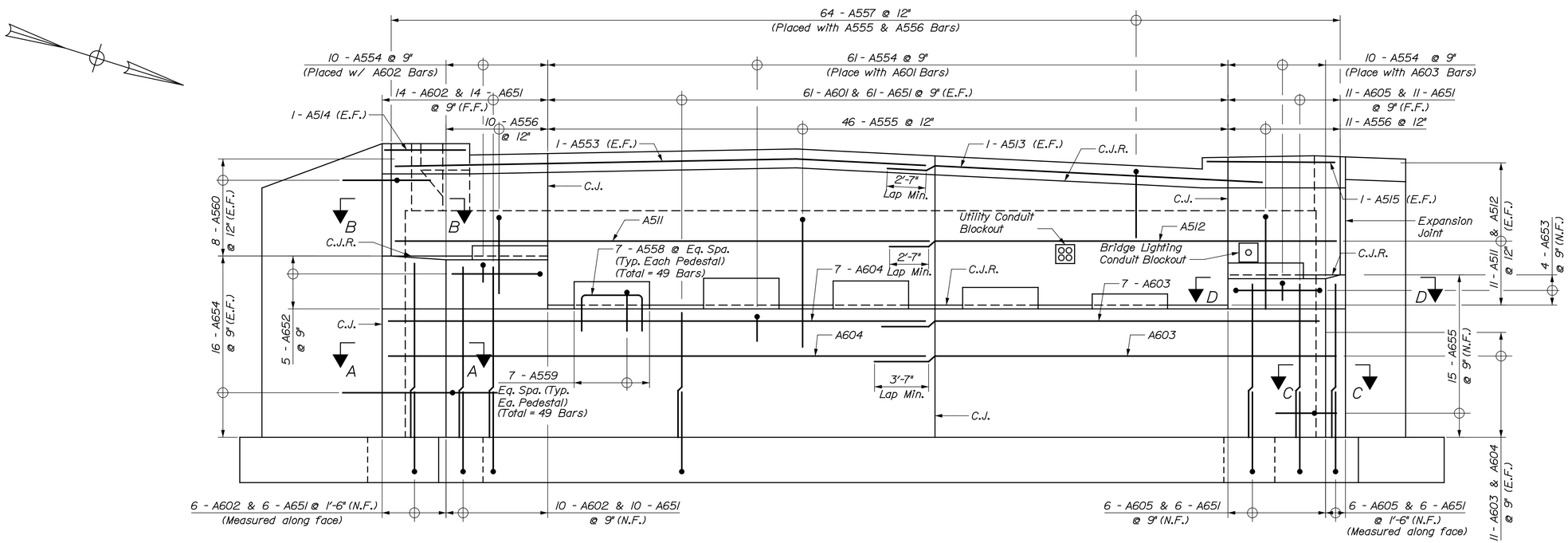

ABUTMENT NO. 1 REINFORCING ELEVATION
(Wingwall and Footing reinforcement not shown for clarity)

LEGEND:
C.J. = Construction Joint
C.J.R. = Construction Joint, Roughen Surface 1/4" profile Min. (Typ.)

T·Y·LIN INTERNATIONAL

STATE OF MAINE
DEPARTMENT OF TRANSPORTATION

BRIDGE PLANS
WIN 16705.00
BRIDGE NO. 2660

	N.B.	BY	DATE
PROJ. MANAGER			
DESIGN-DETAILED	TJP	SAM	.
CHECKED-REVIEWED	TJP	RMH	.
DESIGN2-DETAILED2			
DESIGN3-DETAILED3			
REVISIONS 1			
REVISIONS 2			
REVISIONS 3			
REVISIONS 4			
FIELD CHANGES			

SIGNATURE
P.E. NUMBER
DATE

PENOBSCOT RIVER BRIDGE
PENOBSCOT RIVER
HOWLAND-ENFIELD PENOBSCOT COUNTY

ABUTMENT NO. 1
REINFORCING

SHEET NUMBER
65
OF 127

Date:12/16/2014
Username:
Division:
Filename: ...\XXX_Abutment_1_Reinforcing.dgn

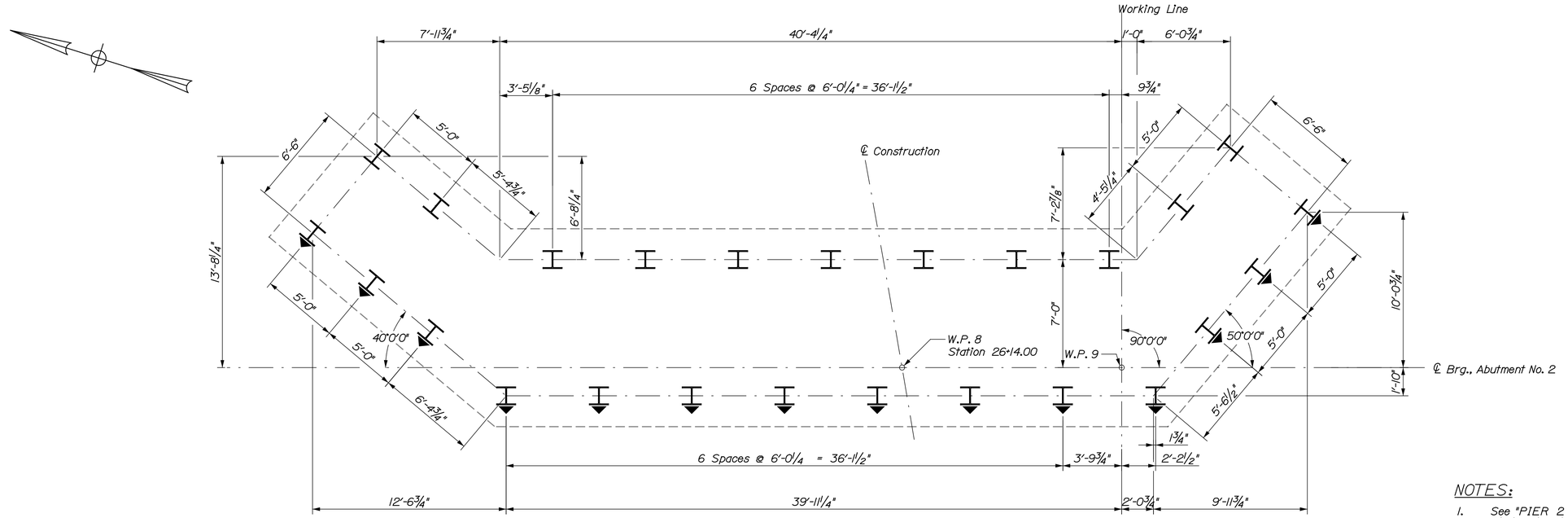

ABUTMENT NO. 2 PILE PLAN

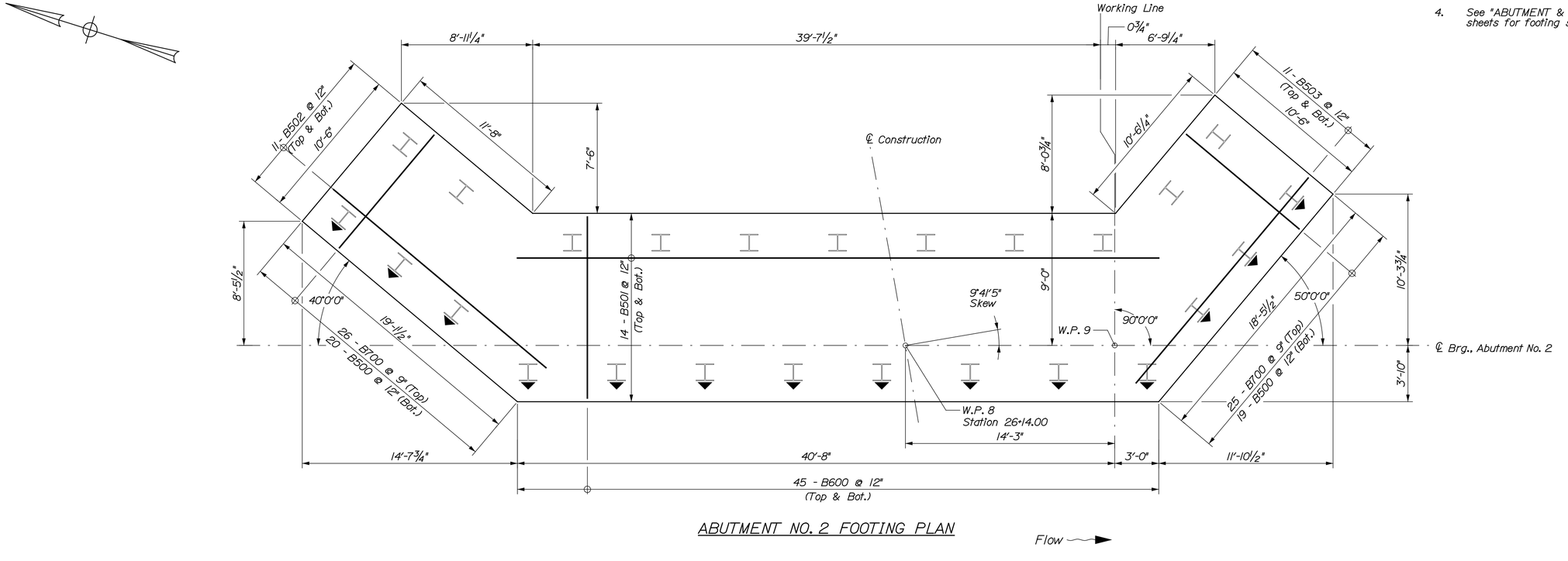

ABUTMENT NO. 2 FOOTING PLAN

NOTES:

1. See "PIER 2 PILE LAYOUT PLAN" for Abutment and Pier Pile Notes.
2. See "ABUTMENT NO. 2 PLAN & ELEVATION" for Abutment Notes.
3. Adjust spacing of reinforcing bars to avoid piles.
4. See "ABUTMENT & WINGWALL SECTIONS" sheets for footing sections.

T·Y·LIN INTERNATIONAL

STATE OF MAINE
DEPARTMENT OF TRANSPORTATION

BRIDGE PLANS

WIN 16705.00

BRIDGE NO. 2660

	NLB	BY	DATE
PROJ. MANAGER			
DESIGN-DETAILED	JKO	TJP	.
CHECKED-REVIEWED	TJP	JKO	.
DESIGN2-DETAILED2			
DESIGN3-DETAILED3			
REVISIONS 1			
REVISIONS 2			
REVISIONS 3			
REVISIONS 4			
FIELD CHANGES			

SIGNATURE

P.E. NUMBER

DATE

PENOBSCOT RIVER BRIDGE
PENOBSCOT RIVER
HOWLAND-ENFIELD PENOBSCOT COUNTY

ABUTMENT NO. 2
PILE & FOOTING PLAN

SHEET NUMBER
66
OF 127

Date:12/16/2014 Username: Filename: ...\XXX_Abutment_2_Pile_Foot_Plan.dgn Division:

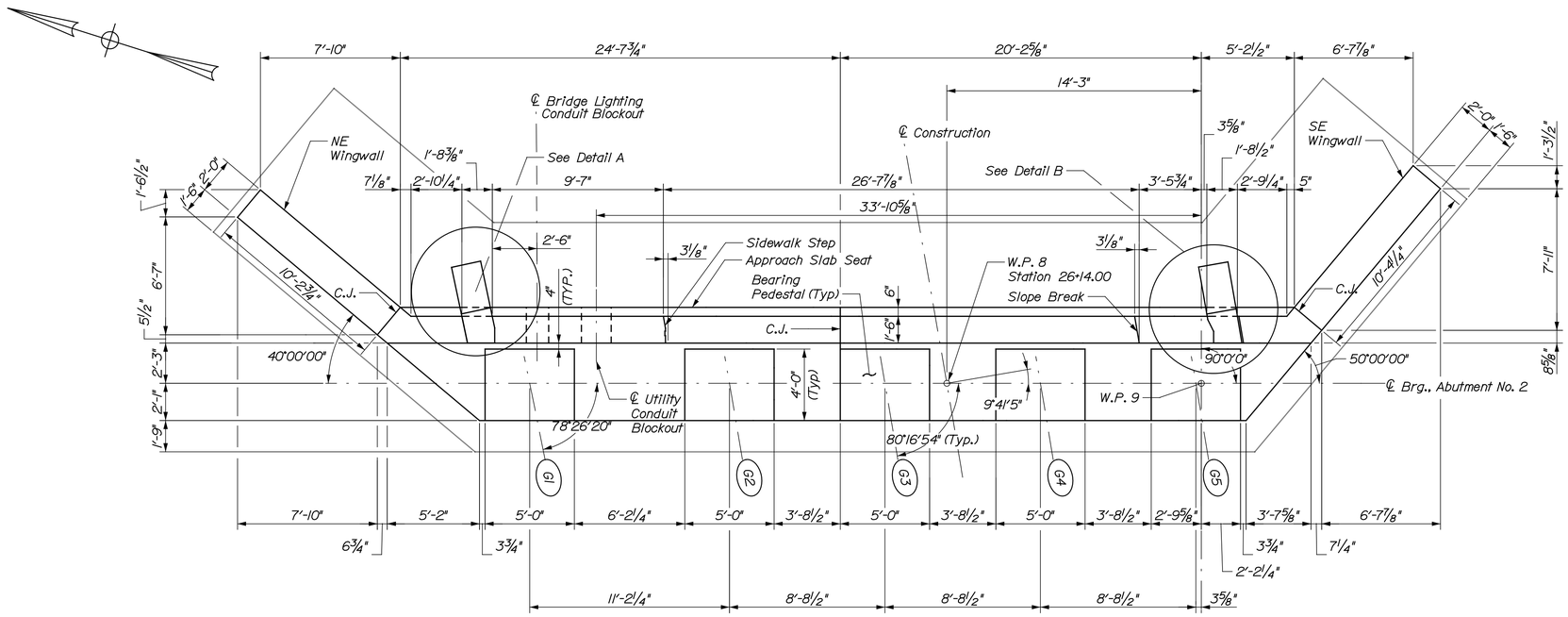

ABUTMENT NO. 2 PLAN
(Piles not shown for clarity)

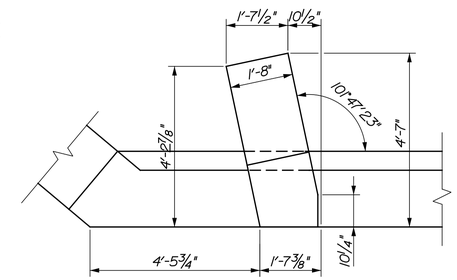

DETAIL A

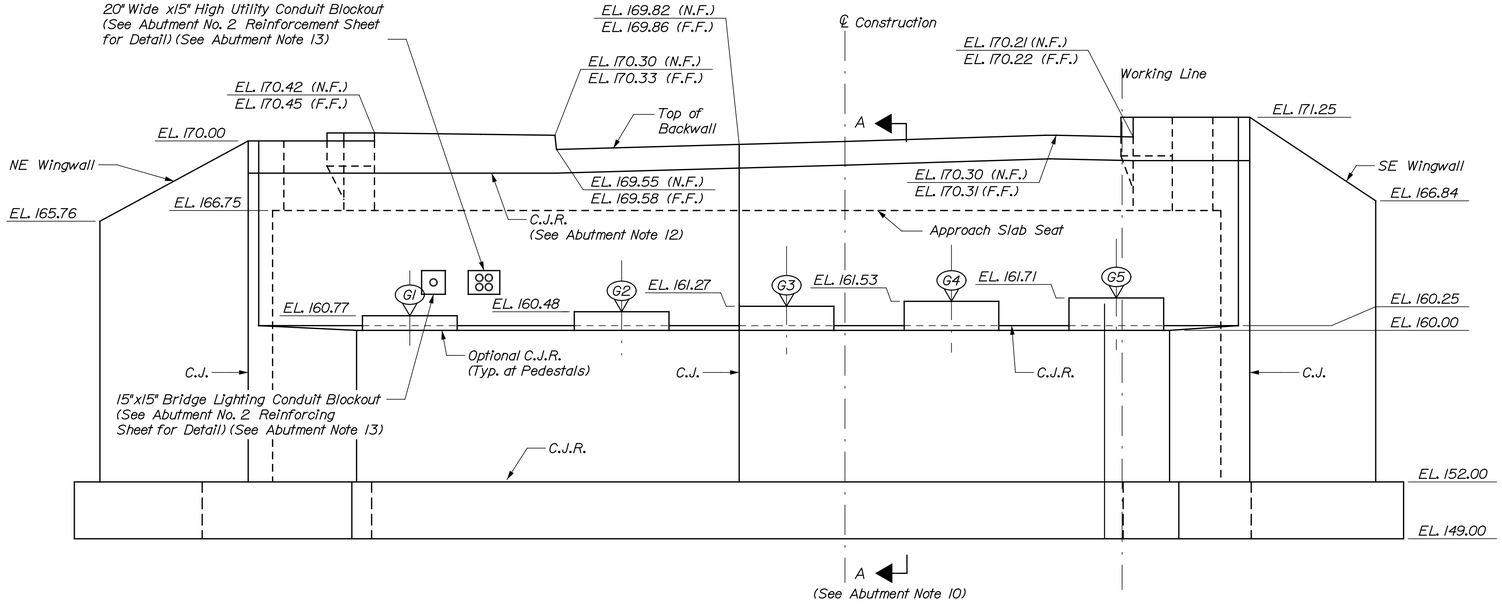

ABUTMENT NO. 2 ELEVATION
(Piles not shown for clarity)

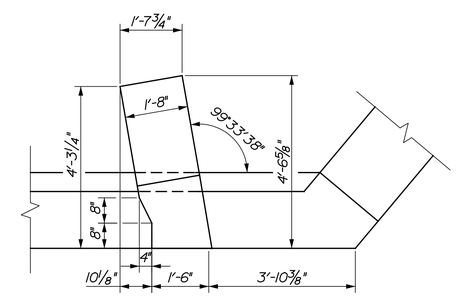

DETAIL B

NOTE:
See sheet "ABUTMENT NO. 1 PLAN & ELEVATION" for Standard Abutment notes.

LEGEND:
C.J. = Construction Joint
C.J.R. = Construction Joint, Roughen Surface 1/4" profile Min. (Typ.)
W.P. = Working Point

T·Y·LIN INTERNATIONAL

STATE OF MAINE
DEPARTMENT OF TRANSPORTATION

BRIDGE PLANS
WIN 16705.00
BRIDGE NO. 2660

PROJ. MANAGER	N.E.B.	BY	DATE
DESIGN-DETAILED	JKO	SAM	.
CHECKED-REVIEWED	TJP	RMH	.
DESIGN2-DETAILED2			
DESIGN3-DETAILED3			
REVISIONS 1			
REVISIONS 2			
REVISIONS 3			
REVISIONS 4			
FIELD CHANGES			

SIGNATURE
P.E. NUMBER
DATE

PENOBSCOT RIVER BRIDGE
PENOBSCOT RIVER
HOWLAND-ENFIELD PENOBSCOT COUNTY

ABUTMENT NO. 2
PLAN & ELEVATION

SHEET NUMBER
67
OF 127

Date:12/16/2014
Username:
Division:
Filename: ...\XXX_Abutment_2_Plan_Elev.dgn

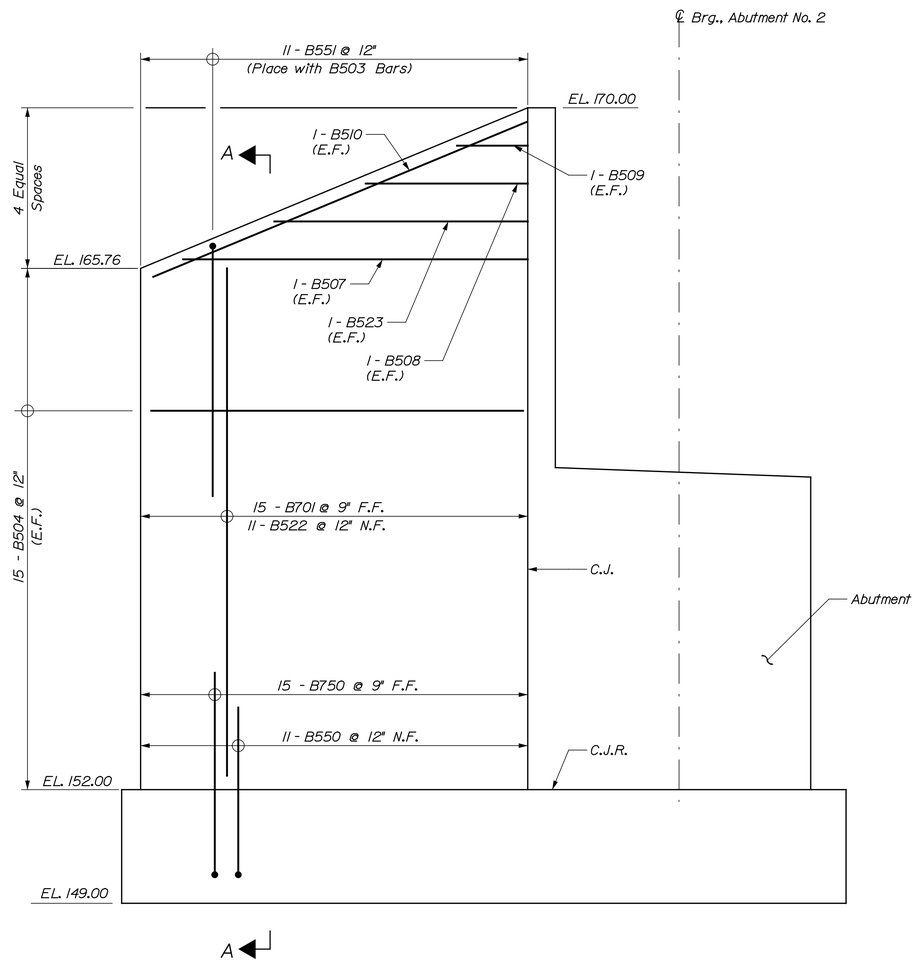

NE WINGWALL REINFORCING ELEVATION

(Footing and Abutment reinforcement not shown for clarity)
(Piles not shown for clarity)

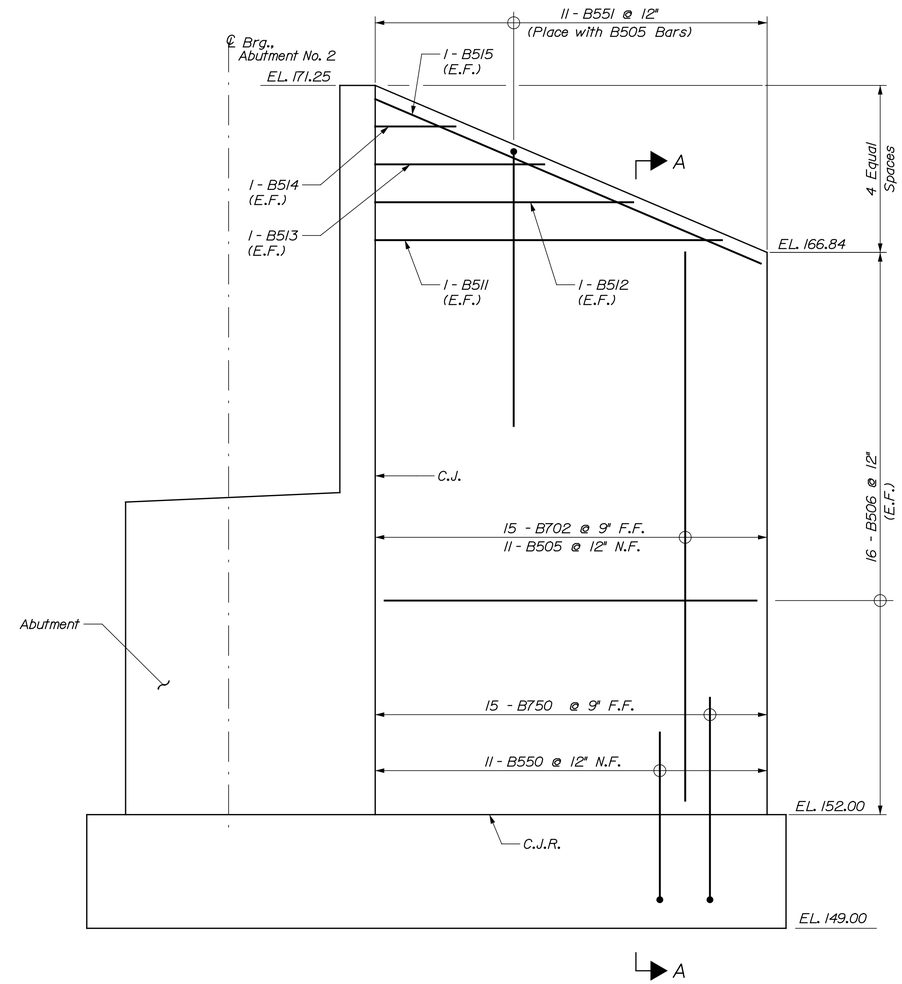

SE WINGWALL REINFORCING ELEVATION

(Footing and Abutment reinforcement not shown for clarity)
(Piles not shown for clarity)

Note:
See "Abutment & Wingwall Sections" for Wingwall Section.

LEGEND:

C.J. = Construction Joint
C.J.R. = Construction Joint, Roughen Surface 1/4" profile Min. (Typ.)

T·Y·LIN INTERNATIONAL

STATE OF MAINE
DEPARTMENT OF TRANSPORTATION

BRIDGE PLANS

WIN 16705.00

BRIDGE NO. 2660

PROJ. MANAGER	N.B.	BY	DATE
DESIGN-DETAILED	TJP	TJP	.
CHECKED-REVIEWED	RMH	RMH	.
DESIGN2-DETAILED2			
DESIGN3-DETAILED3			
REVISIONS 1			
REVISIONS 2			
REVISIONS 3			
REVISIONS 4			
FIELD CHANGES			

SIGNATURE

P.E. NUMBER

DATE

PENOBSCOT RIVER BRIDGE
PENOBSCOT RIVER
HOWLAND-ENFIELD PENOBSCOT COUNTY

ABUTMENT NO. 2
NE & SE WING ELEVATIONS

SHEET NUMBER
68
OF 127

Date:12/16/2014 Username: Filename: ...\XXX_Abutment_2_Wing_Elevations.dgn Division:

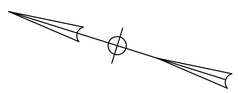

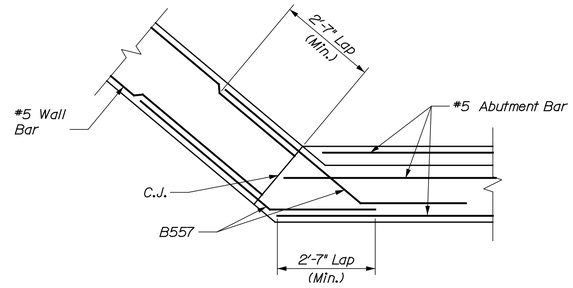

PARTIAL SECTION - B-B
(Vertical reinforcement not shown for clarity)

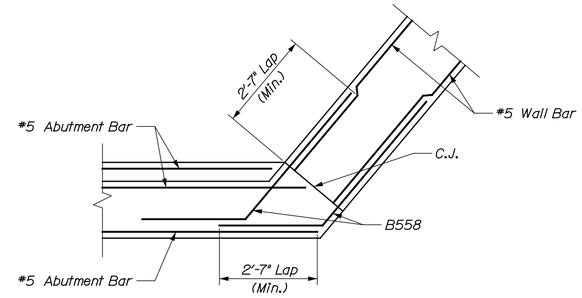

PARTIAL SECTION D-D
(Vertical reinforcement not shown for clarity)

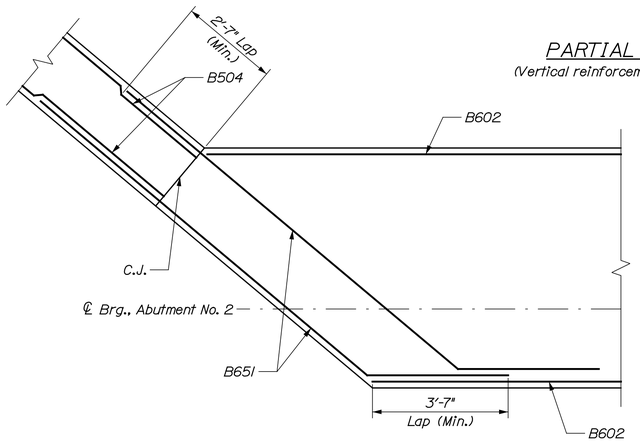

PARTIAL SECTION A-A
(Vertical reinforcement not shown for clarity)

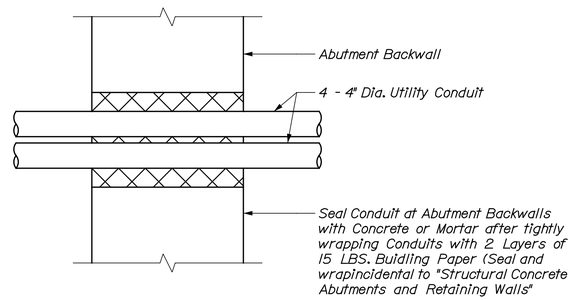

CONDUIT BLOCKOUT DETAIL
(Utility Conduit Blockout shown, Bridge Lighting Conduit Blockout Similar)

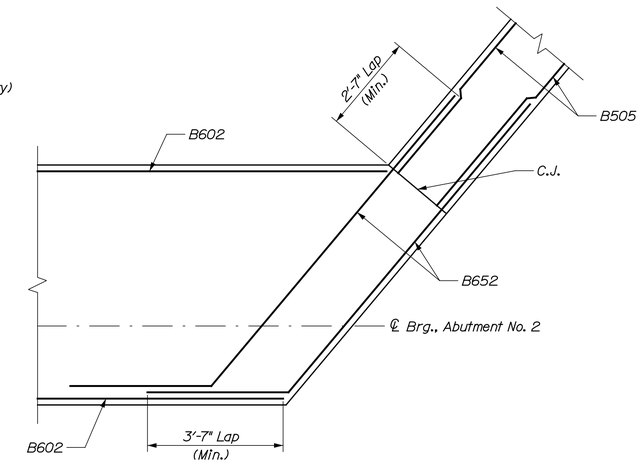

PARTIAL SECTION C-C
(Vertical reinforcement not shown for clarity)

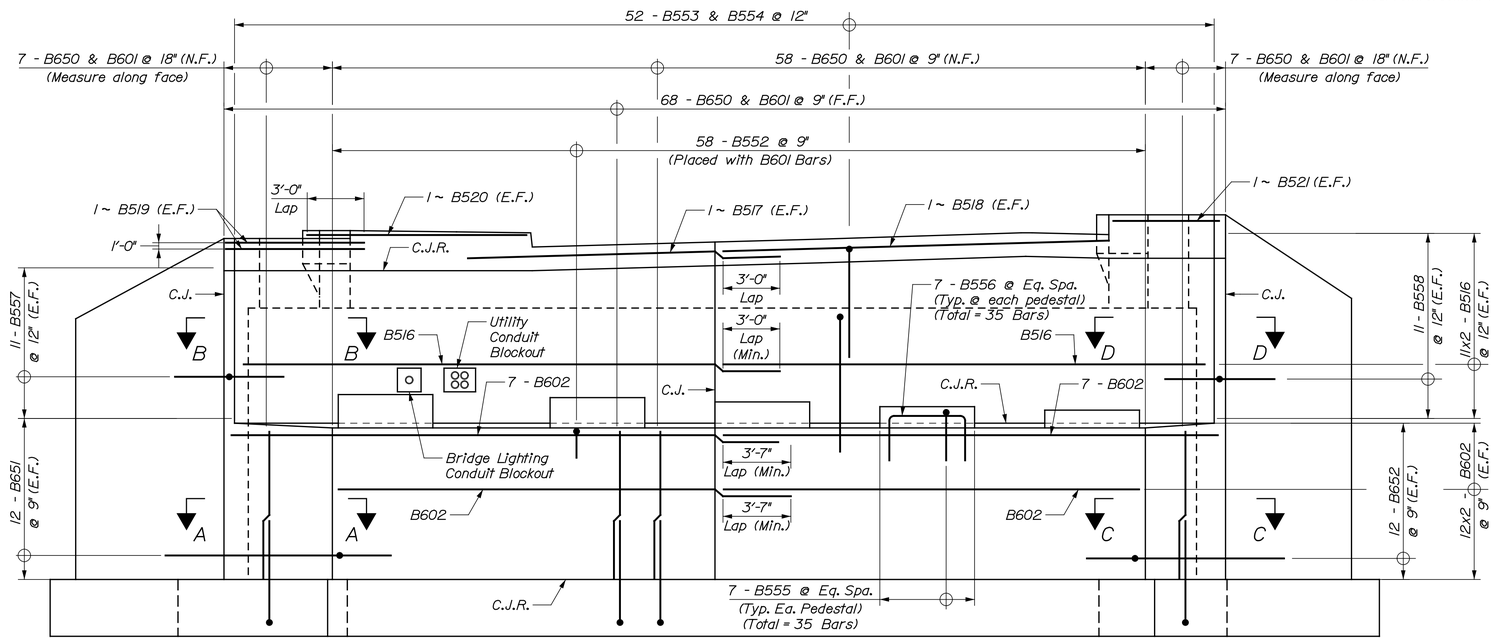

ABUTMENT NO. 2 REINFORCING ELEVATION
(Wingwall and Footing reinforcement not shown for clarity)

LEGEND:
C.J. = Construction Joint
C.J.R. = Construction Joint, Roughen Surface 1/4" profile Min. (Typ.)

T·Y·LIN INTERNATIONAL

STATE OF MAINE
DEPARTMENT OF TRANSPORTATION

BRIDGE PLANS
WIN 16705.00
BRIDGE NO. 2660

PROJ. MANAGER	N.B.	BY	DATE
DESIGN-DETAILED	T.JP	SAM	.
CHECKED-REVIEWED	T.JP	RMH	.
DESIGN2-DETAILED2			
DESIGN3-DETAILED3			
REVISIONS 1			
REVISIONS 2			
REVISIONS 3			
REVISIONS 4			
FIELD CHANGES			

SIGNATURE
P.E. NUMBER
DATE

PENOBSCOT RIVER BRIDGE
PENOBSCOT RIVER
HOWLAND-ENFIELD PENOBSCOT COUNTY

ABUTMENT NO. 2
REINFORCING

SHEET NUMBER
69
OF 127

Date:12/16/2014
Username:
Division:
Filename: ...\XXX_Abutment_2_Reinforcing.dgn

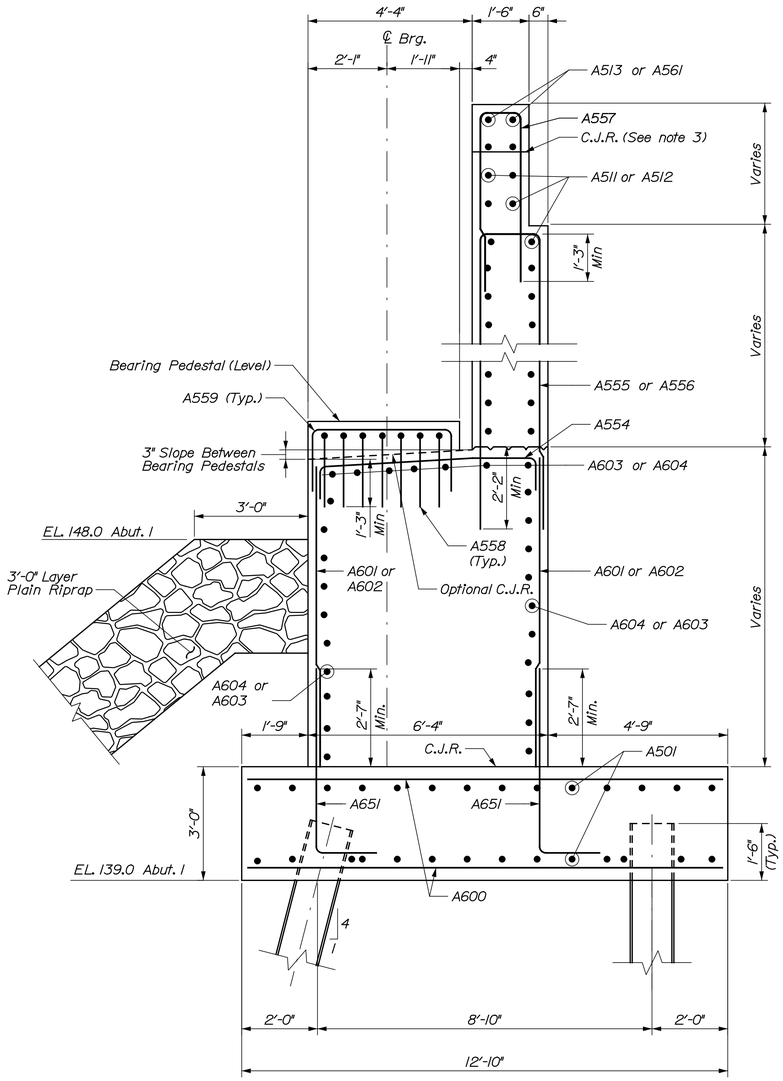

ABUTMENTS 1 SECTION

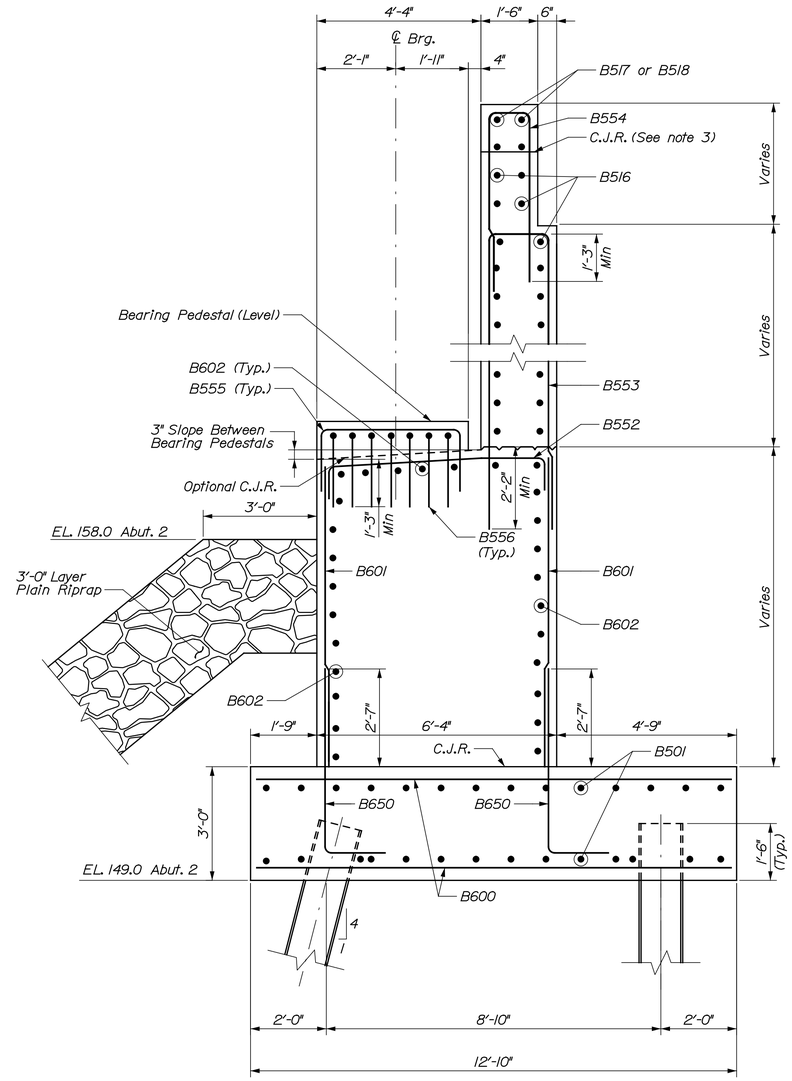

ABUTMENTS 2 SECTION

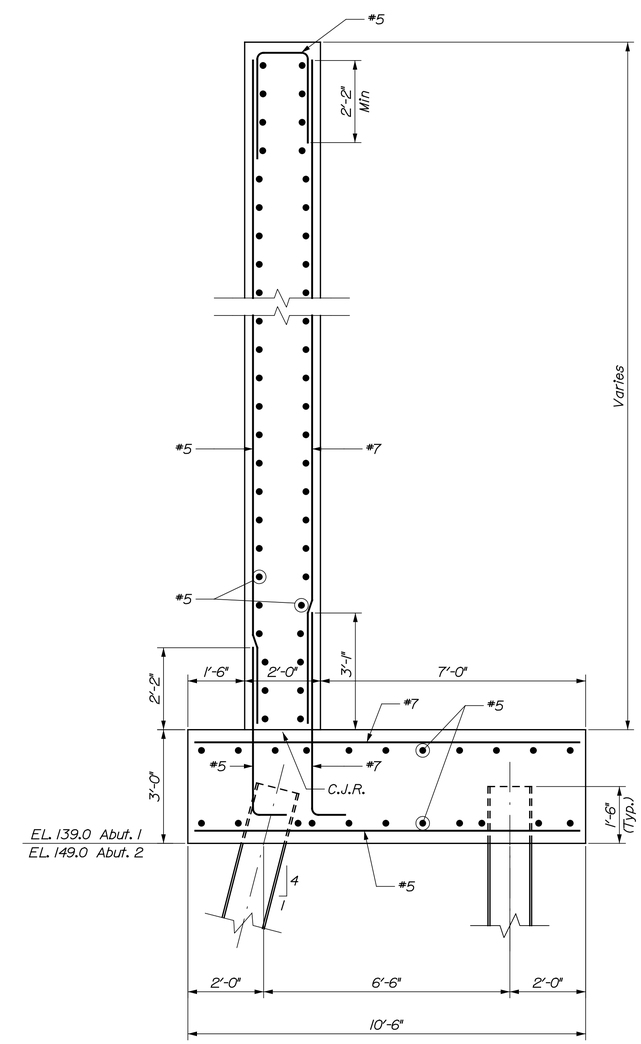

TYPICAL WINGWALL SECTION

NOTES:

1. Wingwall footing reinforcement will be placed to the inside of the Abutment reinforcement.
2. Space reinforcement to avoid piles.
3. Coordinate location of construction joint with placement of Expansion Device - Finger-Joint.

LEGEND:

C.J.R. = Construction Joint, Roughen Surface 1/4" profile Min. (Typ.)

T·Y·LIN INTERNATIONAL

STATE OF MAINE
DEPARTMENT OF TRANSPORTATION

BRIDGE PLANS

WIN 16705.00

BRIDGE NO. 2660

		BY	DATE
PROJ. MANAGER	N.B.		
DESIGN-DETAILED	JKO	SAM	.
CHECKED-REVIEWED	TJP	RMH	.
DESIGN2-DETAILED2			
DESIGN3-DETAILED3			
REVISIONS 1			
REVISIONS 2			
REVISIONS 3			
REVISIONS 4			
FIELD CHANGES			

SIGNATURE

P.E. NUMBER

DATE

PENOBSCOT RIVER BRIDGE
PENOBSCOT RIVER
HOWLAND-ENFIELD PENOBSCOT COUNTY

ABUTMENT & WINGWALL SECTIONS

SHEET NUMBER
70
OF 127

Filename: ...\XXXX_Abutment_Wingwall_Sections.dgn Division: Username: Date:12/16/2014

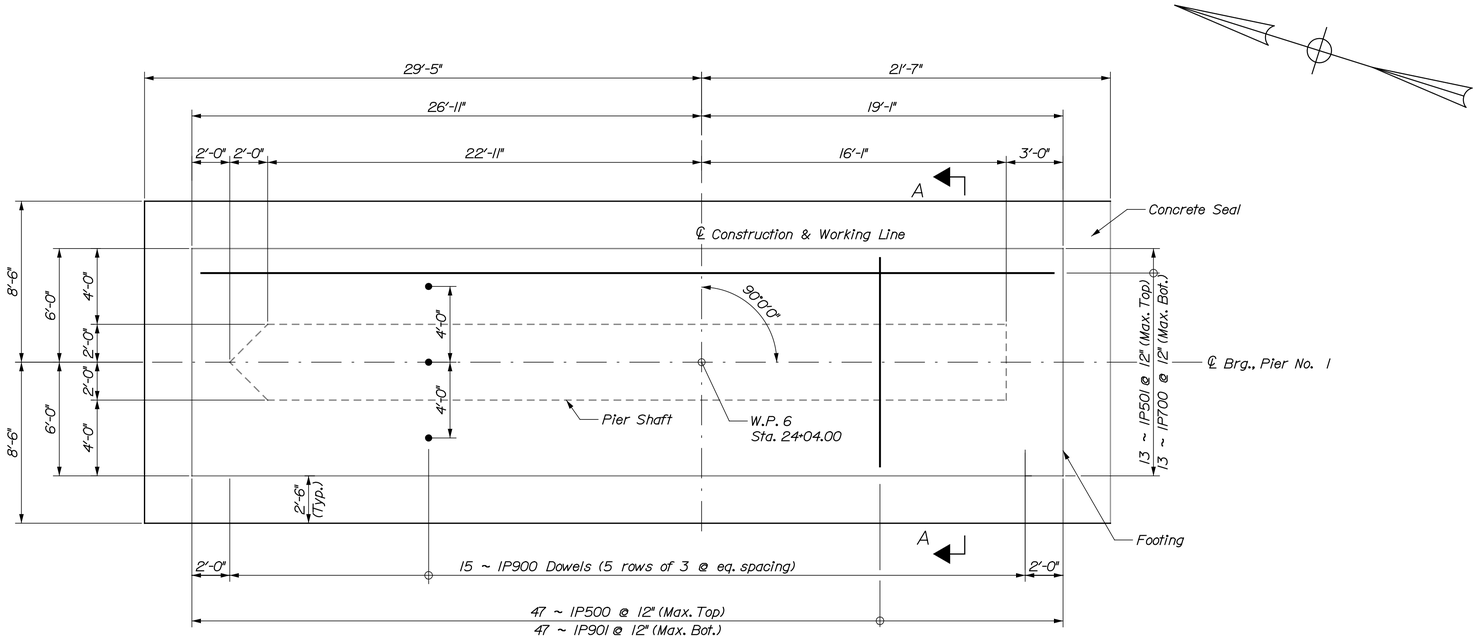

PIER NO. 1 FOOTING PLAN

Flow

NOTES:

1. See "PIER 1 RIENFORCING PLAN & ELEVATION" for shaft dowel bar locations.
2. See "PIER 1 REINFORCING PLAN & ELEVATION" for set "B" bars.

SEAL COFFERDAM NOTES:

1. The seal concrete placement dimensions represent the minimum seal size necessary to meet design requirements and are not based on the use of any particular sheet pile section.
2. The horizontal pay limit for seal concrete shall be to the dimensions shown on the plans. No additional payment will be made for concrete placed outside of these limits.
3. When sheet piling is used for seal cofferdams, appropriate rolled corners shall be used, and the inside face of the sheet piling shall be at or outside of the seal concrete dimensions shown.
4. The depth of the seal is set for a maximum water elevation of 136.0 and the cofferdam shall be vented at this elevation. If the water elevation at the time of construction is higher, the depth of the seal shall be adjusted.
5. Concrete seal at Pier 1 shall be paid under Item 502.24, Structural Concrete Piers (Placed Under Water).
6. Concrete seals at Piers 2 and 3 shall be paid under Item 502.249, Structural Concrete Piers (Placed Under Water).
7. The Contractor shall provide a seal dowel submittal for review and approval by the Resident. The submittal shall indicate propsed method of hole preparation, hole diameter, proposed cleaning methods, grout material and grouting methods. The method of placing dowels in the seal concrete shall be approved by the Resident.
8. Pier seal concrete shall be placed on bedrock cleaned of all weathered rock, loose fractured rock, boulders and soil. Where the bedrock surface slope exceeds 4H:1V, the bedrock surface shall be benched in level steps or made completely level. Cofferdam excavation inspection shall be the responsibility of the Contractor and be conducted in accordance with Standard Specification Section 511 - Cofferdams. An inspection report shall be submitted to the Resident for review. The report shall include bedrock elevation measurements and observations and assess the levelness, cleanliness, and sediment thickness. Sediment measurements and bedrock elevation measurements will be taken at a minimum of 20 evenly disturbed locations.
9. Each seal shall be cored full depth in at least (3) locations to ensure that the seal was satisfactorily placed. The final core run shall sample the bedrock surface. These locations will be approved by the Resident. Seal concrete core samples will be a minimum of 3-in o.d., be adequately stored in boxes and each core run labeled. In the event that voids or any other defects are found, the Contractor shall correct the defects in a manner approved by the Resident. For each core that reveals a void or defect, two additional cores shall be taken after repairs are made. One additional core shall be taken in approximately the same location as the original core. The other core will be located by the Resident. All core holes shall be refilled using a non-shrink grout. The cost of all coring and repairs will be considered incidental to related contract items.

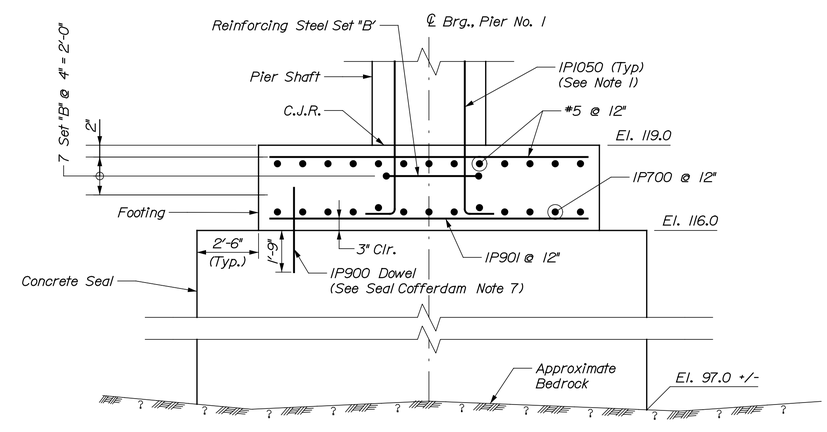

SECTION A-A

LEGEND:

C.J.R. = Construction Joint, Roughen Surface 1/4" profile Min. (Typ.)
W.P. = Working Point

T·Y·LIN INTERNATIONAL

STATE OF MAINE
DEPARTMENT OF TRANSPORTATION

BRIDGE PLANS

WIN 16705.00

BRIDGE NO. 2660

PROJ. MANAGER		N.B.	BY	DATE
DESIGN-DETAILED	DSM		SAM	.
CHECKED-REVIEWED	RMH		RMH	.
DESIGN2-DETAILED2				
DESIGN3-DETAILED3				
REVISIONS 1				
REVISIONS 2				
REVISIONS 3				
REVISIONS 4				
FIELD CHANGES				

SIGNATURE

P.E. NUMBER

DATE

PENOBSCOT RIVER BRIDGE
PENOBSCOT RIVER
HOWLAND-ENFIELD PENOBSCOT COUNTY

PIER 1 FOOTING PLAN

SHEET NUMBER

71

OF 127

Date:12/16/2014

Username:

Division:

Filename: ...\XXX_Pier 1_Footing_Plan.dgn

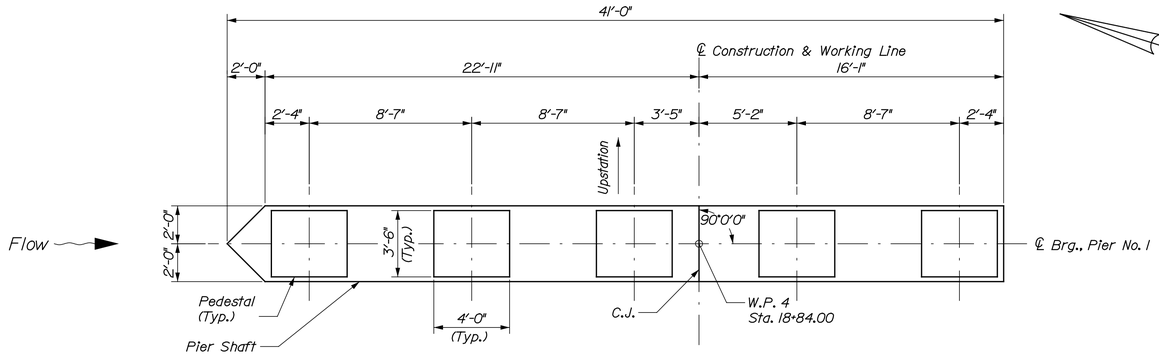

PIER NO. 1 SHAFT PLAN

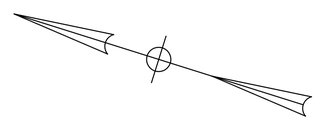

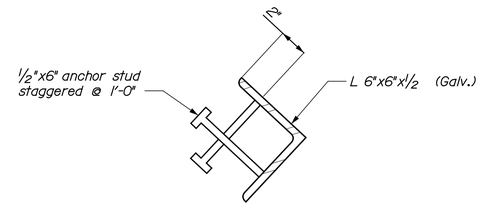

NOSE ARMOR DETAIL

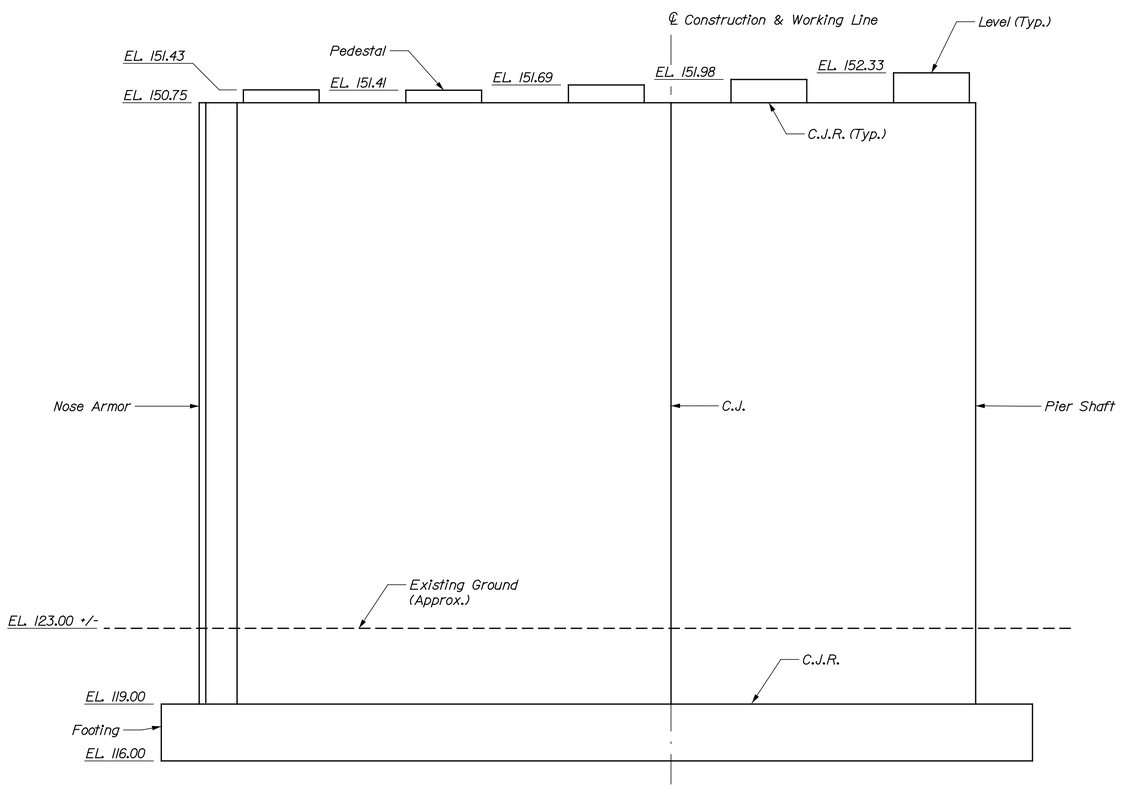

PIER NO. 1 ELEVATION

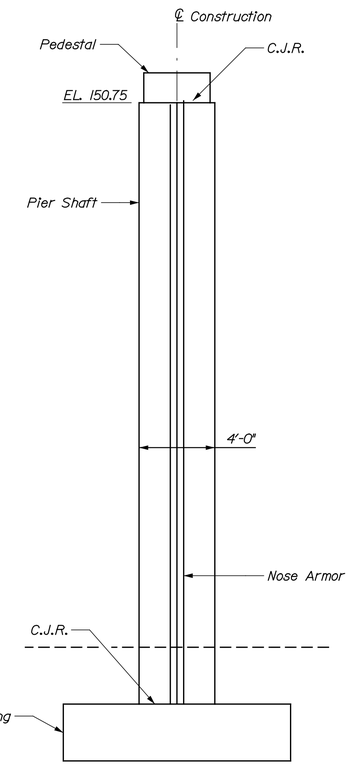

PIER NO. 1 END ELEVATION

Upstream End Shown. Downstream End Similar.

PIER NOTES:

1. Reinforcing steel shall have a minimum concrete cover of 3 inches unless otherwise noted.
2. The bearing pedestal elevations shown are based on bearing heights shown on the "BEARING LAYOUT" drawing. Adjustments to the bearing pedestal elevations, if necessary, shall be made according to the provisions stated on that sheet.
3. Nose armor, including anchor studs, shall be incidental to Pay Item No. 502.39: Structural Concrete, Piers.
4. Pedestal Elevations are approximate. The actual elevations shall be adjusted to accomadate the bearings supplied by the contractor. The elevations given assume an overall bearing height for Pier 1 & 2 of 6¾" for Girders 1 & 5 and 10⅞" for Girders 2, 3 & 4 and a bearing height for Pier 2 of 6¾" for Girders 1 & 5 and 8" for Girders 2, 3 & 4.
5. The maximum factored applied footing pressure for pier 1 is 14.0 ksf.

DESIGN CRITERIA:

Critical AASHTO Load Combination - Strength III
Buoyancy - Water level assumed at Elevation 147.7
Stream flow - Velocity of 6.4 fps skewed at 5° to longitudinal centerline of pier
Wind - 100 mph
Ice - Thickness 2 feet, pressure 100 psi at Elevation 147.7, 30% of nose force applied transverse to pier

LEGEND:

C.J. = Construction Joint
C.J.R. = Construction Joint, Roughen Surface 1/4" profile Min. (Typ.)
W.P. = Working Point

T·Y·LIN INTERNATIONAL

STATE OF MAINE
DEPARTMENT OF TRANSPORTATION

BRIDGE PLANS

WIN 16705.00

BRIDGE NO. 2660

PROJ. MANAGER			
		SIGNATURE	
DESIGN-DETAILED	DSM	SAM	.
CHECKED-REVIEWED	RMH	RMH	.
DESIGN2-DETAILED2			
DESIGN3-DETAILED3			
REVISIONS 1			
REVISIONS 2			
REVISIONS 3			
REVISIONS 4			
FIELD CHANGES			

P.E. NUMBER

DATE

PENOBSCOT RIVER BRIDGE
PENOBSCOT RIVER
HOWLAND-ENFIELD PENOBSCOT COUNTY

PIER 1 SHAFT
PLAN & ELEVATION

SHEET NUMBER
72
OF 127

Date:12/16/2014
Username:
Division:
Filename: ...\MSTA\XXX_Pier 1_Plan_Elev.dgn

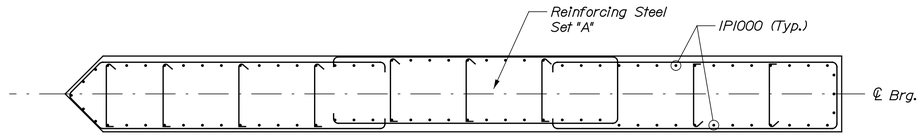

SECTION A-A

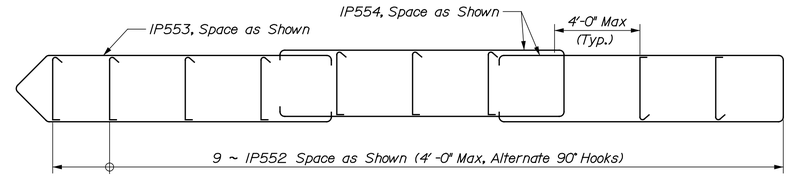

REINFORCING STEEL SET "A"

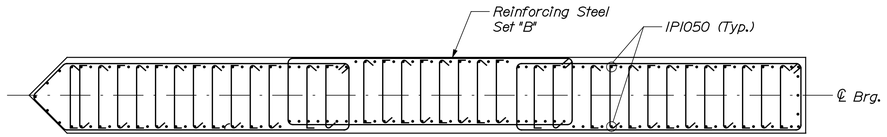

SECTION B-B

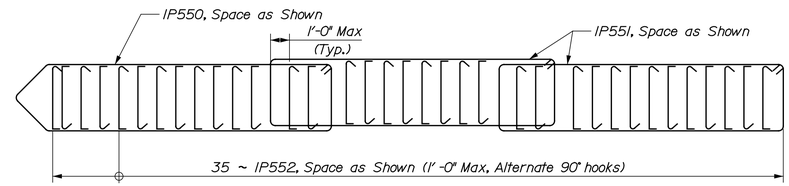

REINFORCING STEEL SET "B"

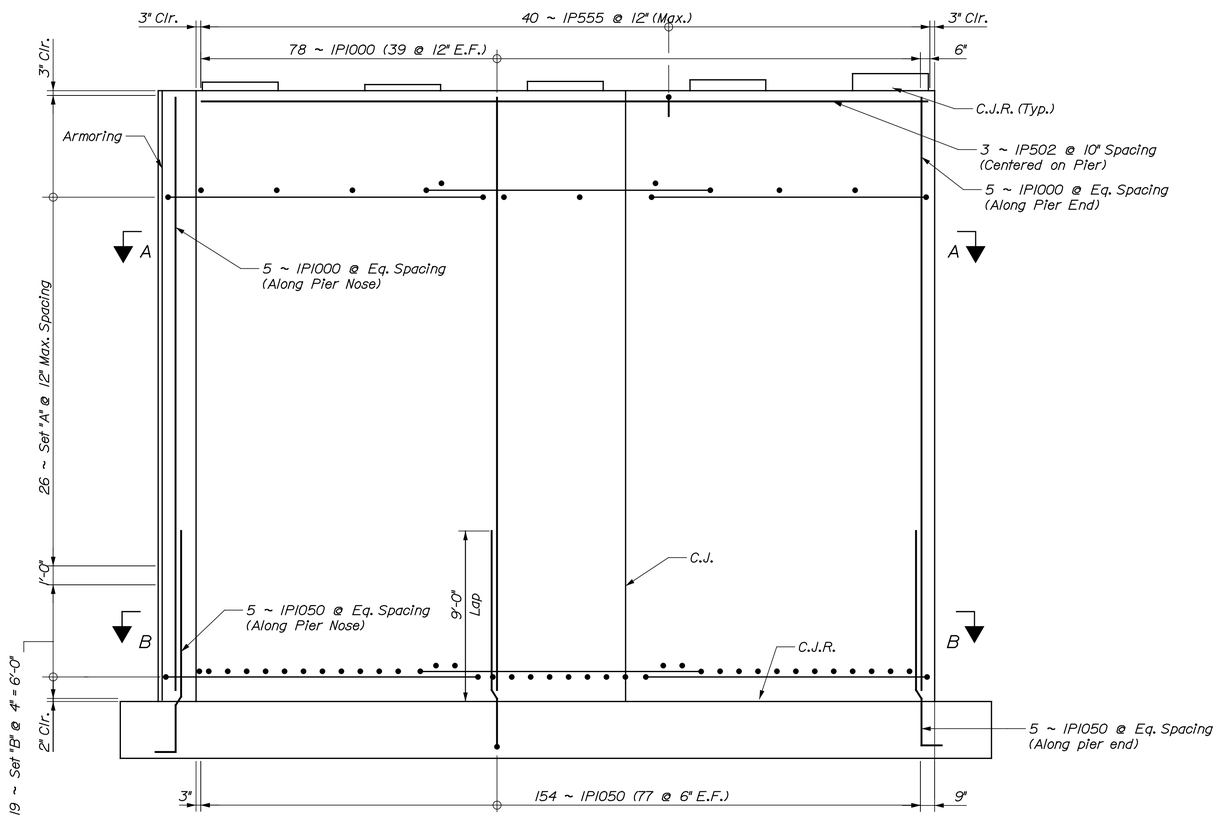

PIER NO. 1 ELEVATION

Flow

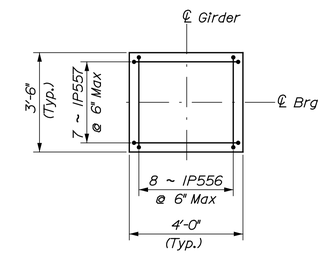

PEDESTAL REINFORCEMENT PLAN

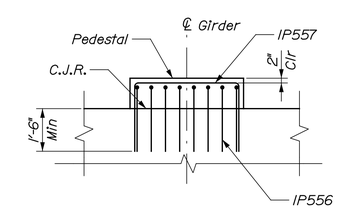

PEDESTAL REINFORCEMENT ELEVATION

LEGEND:

C.J. = Construction Joint
C.J.R. = Construction Joint, Roughen Surface 1/4" profile Min. (Typ.)
E.F. = Each Face

T·Y·LIN INTERNATIONAL

STATE OF MAINE
DEPARTMENT OF TRANSPORTATION

BRIDGE PLANS

WIN 16705.00

BRIDGE NO. 2660

PROJ. MANAGER	N.B.	BY	DATE
DESIGN-DETAILED	DSM	SAM	.
CHECKED-REVIEWED	RMH	RMH	
DESIGN2-DETAILED2			
DESIGN3-DETAILED3			
REVISIONS 1			
REVISIONS 2			
REVISIONS 3			
REVISIONS 4			
FIELD CHANGES			

SIGNATURE

P.E. NUMBER

DATE

PENOBSCOT RIVER BRIDGE
PENOBSCOT RIVER
HOWLAND-ENFIELD PENOBSCOT COUNTY

PIER 1 REINFORCING PLAN & ELEVATION

SHEET NUMBER
73
OF 127

Date:12/16/2014
Username:
Filename: ...\XXX_Pier 1_Reinforcing_Plan_Elev.dgn Division:

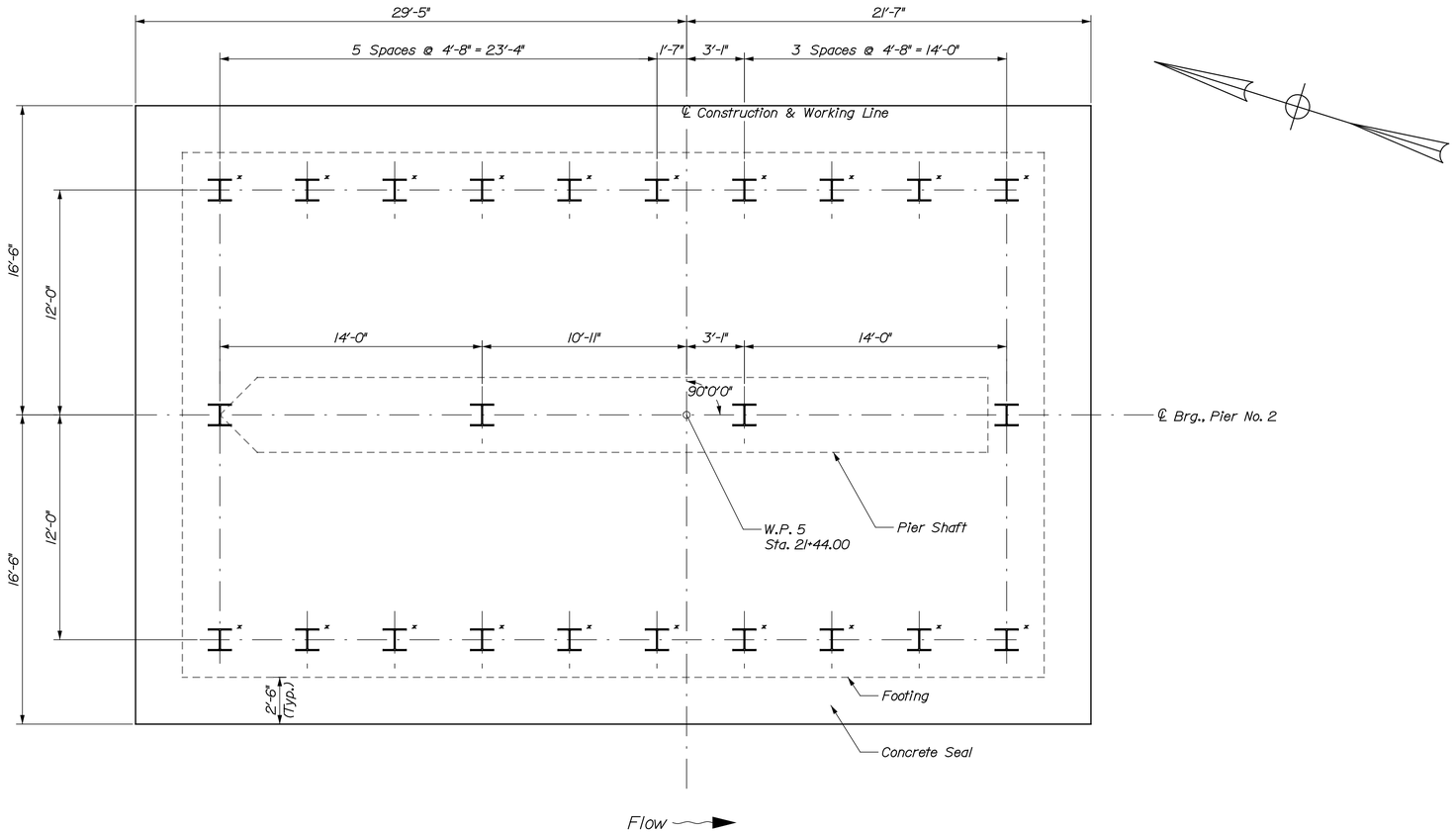

PIER NO. 2 PILE PLAN

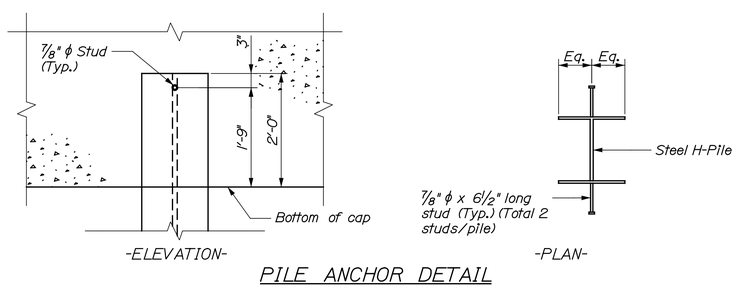

PILE ANCHOR DETAIL

PILE NOTES:

1. Piles marked with an * shall have two 8" x 7/8" diameter studs attached to the pile head. See detail this sheet.

2. The maximum factored pile loads are:
   Abutment No. 1: 392 kips
   Abutment No. 2: 392 kips
   Pier No. 2: 460 kips
   Pier No. 3: 515 kips

3. Estimate of piles required:
   Abutment No. 1: 33-HP 14x89 @ 15.50 ft
   Abutment No. 2: 25-HP 14x89 @ 20.50 ft
   Pier No. 2: 24-HP 14x117 @ 49 ft
   Pier No. 3: 18-HP 14x117 @ 45 ft
   The order lengths of the piles shall include an additional 5 feet of length for each test pile to accommodate dynamic pile testing equipment. Additional pile length may be required to maintain pile testing instrumentation above the water elevation. No additional payment will be made for additional pile length needed to accomodate dynamic pile testing equirment. Cost will be incidental to related contract items.

4. The Contractor shall submit to the Department, for review and acceptance, their proposed pile driving equipment with a completed "Pile and Driving Equipment Data Form", Figure 1 of Standard Specification Section 501 - Foundation Piles. Approval of the proposed pile driving equipment by the Department will be based on Department-conducted wave equation analyses and the criteria specified in Section 501 and Subsection 501.042, Equipment of Driving Piles. If the Department-conducted wave equation analyses show that the proposed driving system(s) is unacceptable, the Contractor shall modify or replace the proposed driving equipment in an amendment of the QCP, at their own expense, until subsequent wave equation analyses by the Department indicate the pile can be driven to the required resistance, without damage or excessive blows.

5. The Contractor shall provide access for the agents of the Department to perform three (3) dynamic load tests with signal matching and 24 - hour (minimum) restrike at each Abutment No. 1 and Abutment No. 2, as specified in Special Provision 501 - Dynamic Loading Test, to confirm the normal resistance of the piles. The first and second dynamic pile load tests will be completed on the first plumb and battered production piles driven, as directed by the Resident. The one remaining test at each Abutment will be completed at a different location within the pile group, as directed by the Resident, after approximately one half of the production piles have been installed. The required nominal resisitance for the piles is the maximum factored axial pile load divided by a resistance factor equal to 0.65 per LRFD Specifications.

6. The Contractor shall provide access for the agents of the Department to perform three (3) dynamic load tests with signal matching and 24 hour (minimum) restrikes at Pier No. 2, as specified in Special Provision 501 - Dynamic Loading Test, to confirm the nominal resistance of the piles. The first and second dynamic pile load tests will be completed on the first production piles driven in opposite corners of the substructure. The third test will be completed at a different location within the pile group as directed by the Resident after approximately one half of the production piles have been installed. The Contractor shall provide access for the agents of the Department to perform two (2) dynamic load tests with signal matching and 24-hour (minimum) restrikes at Pier No. 3, as specified in Special Provision 501 - Dynamic Loading Test, to confirm the nominal resistance of the piles on the first production piles driven in opposite corners of the substructure. The required nominal resistance for the piles is the maximum factored axial pile load divided by a resistance factor equal to 0.65 per LRFD Specifications.

7. The driving system shall be operating at efficiency equal to or greater than that used in the wave equation submittal. If the driving system is not operating at the required effenciency, as indicated by the approved wave equation analysis and/or dynamic load tests result, the Contractor shall rebuild or replace driving system components, in accordance with Standard Specification Section 501.

8. All piles shall be equipped with a pile tip in accordance with Standard Specification Section 501.048, Prefabricated Pile Tips.

9. H-pile material shall be ASTM A572, Grade 50.

STATE OF MAINE
DEPARTMENT OF TRANSPORTATION

WIN 16705.00
BRIDGE NO. 2660
BRIDGE PLANS

PROJ. MANAGER		N.E.B.	BY	DATE
DESIGN-DETAILED	DSM		SAM	.
CHECKED-REVIEWED	RMH		RMH	.
DESIGN2-DETAILED2				
DESIGN3-DETAILED3				
REVISIONS 1				
REVISIONS 2				
REVISIONS 3				
REVISIONS 4				
FIELD CHANGES				

SIGNATURE
P.E. NUMBER
DATE

PENOBSCOT RIVER BRIDGE
PENOBSCOT RIVER
HOWLAND-ENFIELD PENOBSCOT COUNTY

PIER 2
PILE LAYOUT PLAN

SHEET NUMBER
74
OF 127

T·Y·LIN INTERNATIONAL

Filename: ...\XXX_Pier 2_Pile_Layout_Plan.dgn Division: Username: Date:12/19/2014

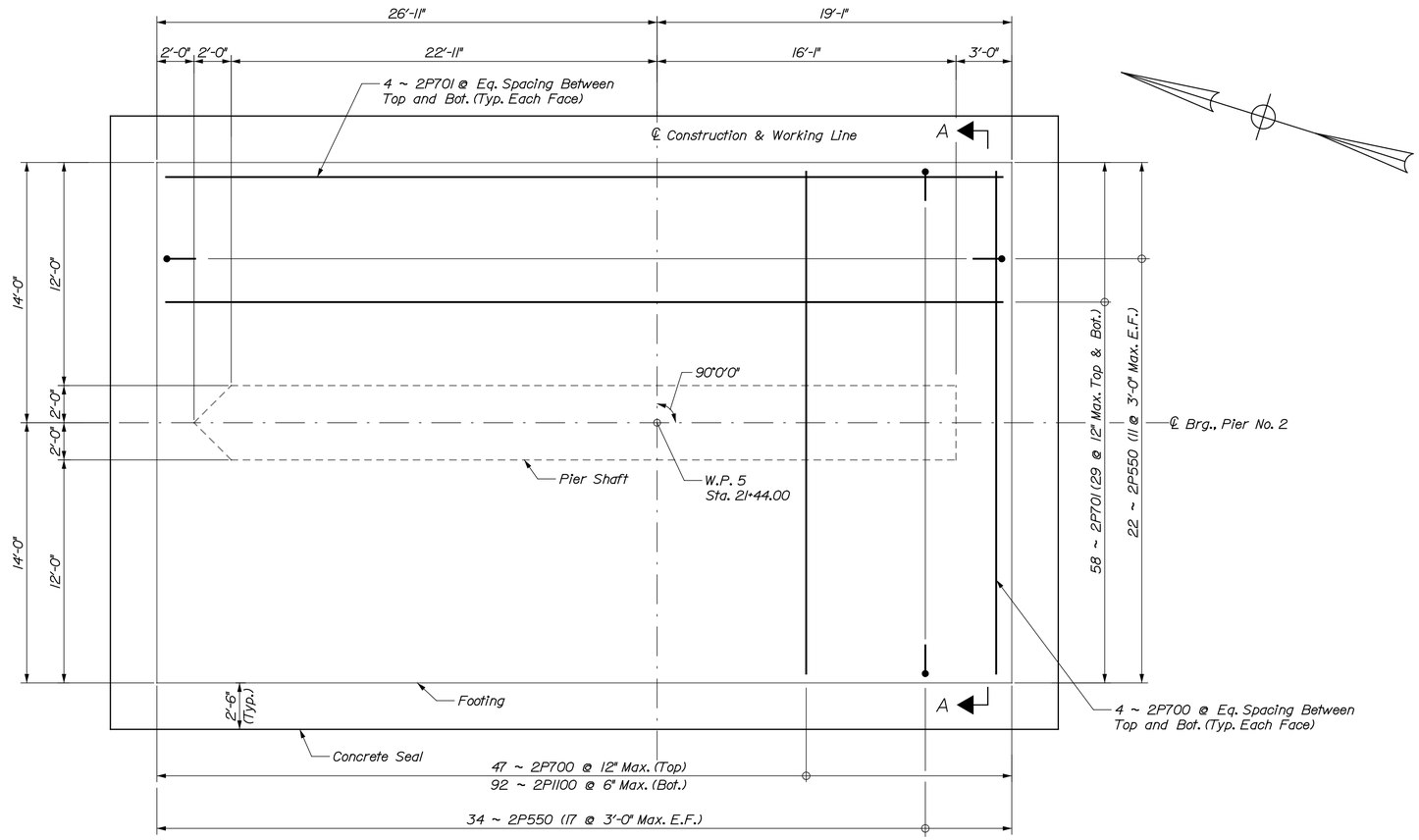

PIER NO. 2 FOOTING PLAN

Flow →

NOTES:

1. See "PIER 1 FOOTING PLAN" for Seal Cofferdam Notes.
2. See "PIER 2 PILE LAYOUT PLAN" for Abutment and Pier Pile Notes.
3. See "PIER 2 REINFORCING PLAN & ELEVATION" plan for reinforcing steel set "B" bars.
4. See "PIER 2 REINFORCING PLAN & ELEVATION" for shaft dowel bar locations.

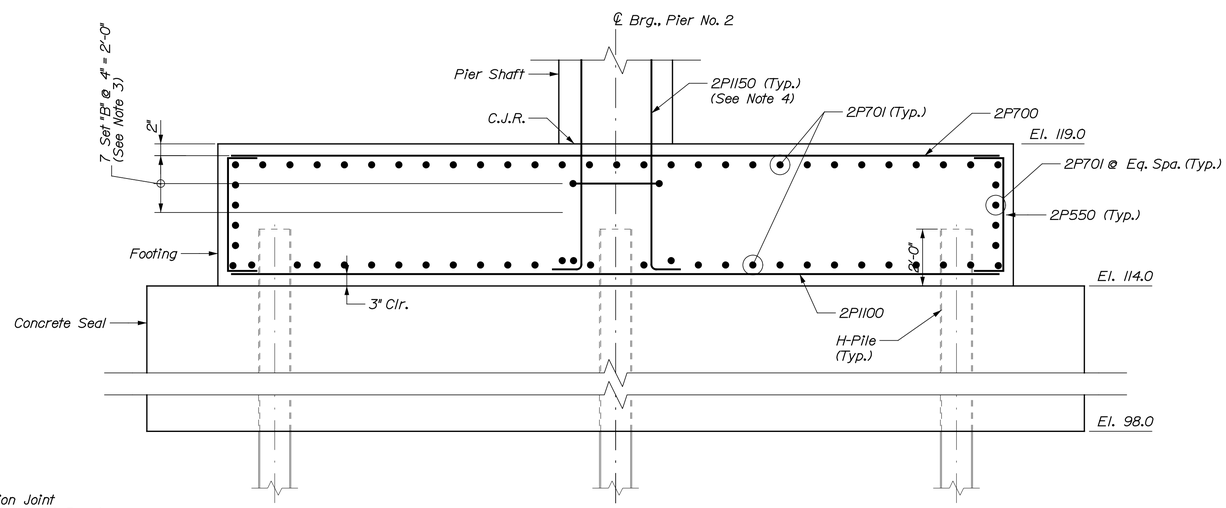

SECTION A-A

(Space Reinforcing around Piles)

LEGEND:

C.J. = Construction Joint
C.J.R. = Construction Joint, Roughen Surface 1/4" profile Min. (Typ.)
W.P. = Working Point

T·Y·LIN INTERNATIONAL

STATE OF MAINE
DEPARTMENT OF TRANSPORTATION

WIN 16705.00

BRIDGE NO. 2660

BRIDGE PLANS

	N.B.	BY	DATE
PROJ. MANAGER			
DESIGN-DETAILED	DSM	SAM	.
CHECKED-REVIEWED	RMH	RMH	.
DESIGN2-DETAILED2			
DESIGN3-DETAILED3			
REVISIONS 1			
REVISIONS 2			
REVISIONS 3			
REVISIONS 4			
FIELD CHANGES			

SIGNATURE

P.E. NUMBER

DATE

PENOBSCOT RIVER BRIDGE
PENOBSCOT RIVER
HOWLAND-ENFIELD PENOBSCOT COUNTY

PIER 2 PILE CAP PLAN

SHEET NUMBER

75

OF 127

Date:12/16/2014 Username: Division: Filename: ...\XXX_Pier 2_Pile_Cap_Plan.dgn

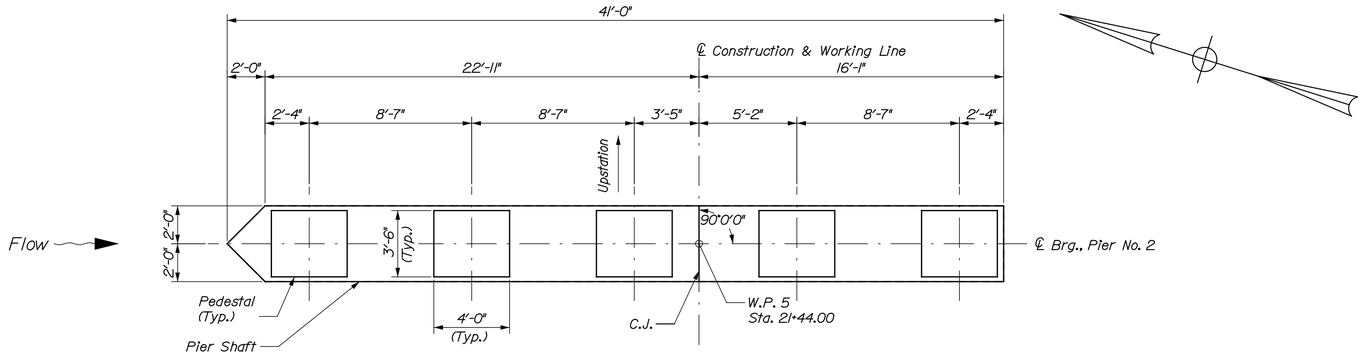

PIER NO. 2 SHAFT PLAN

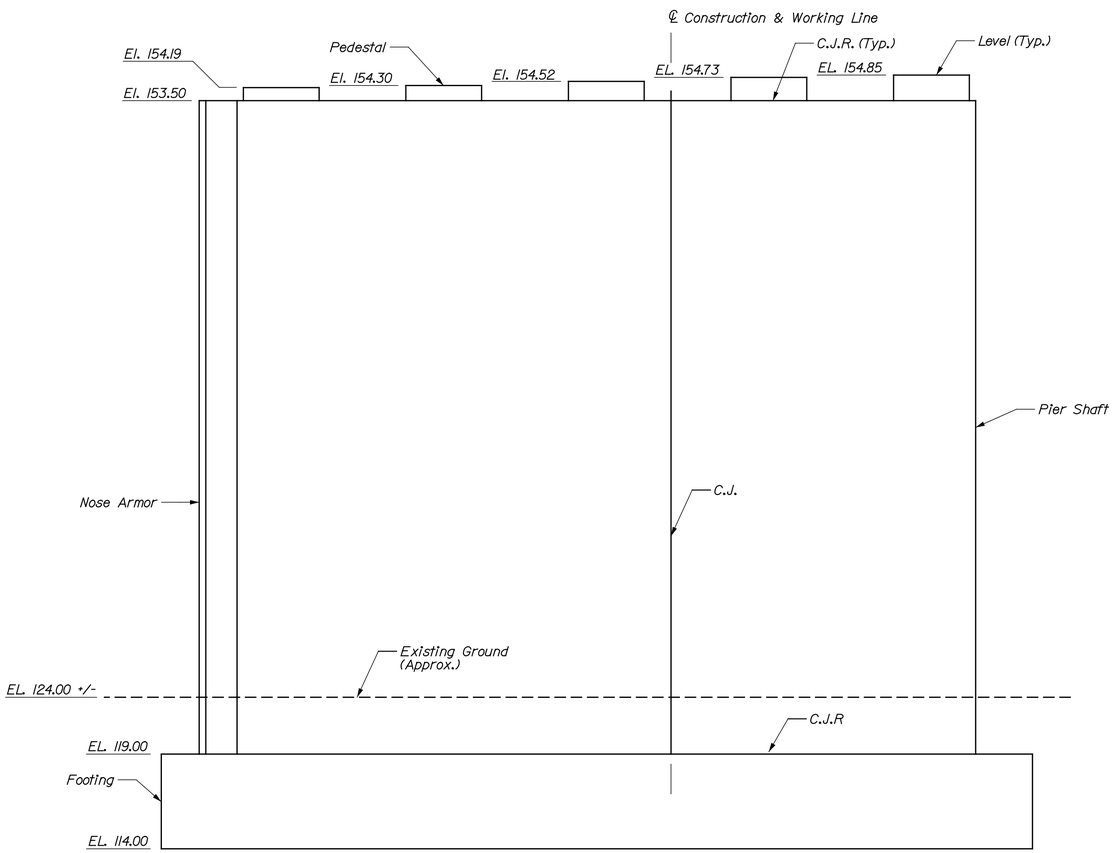

PIER NO. 2 ELEVATION

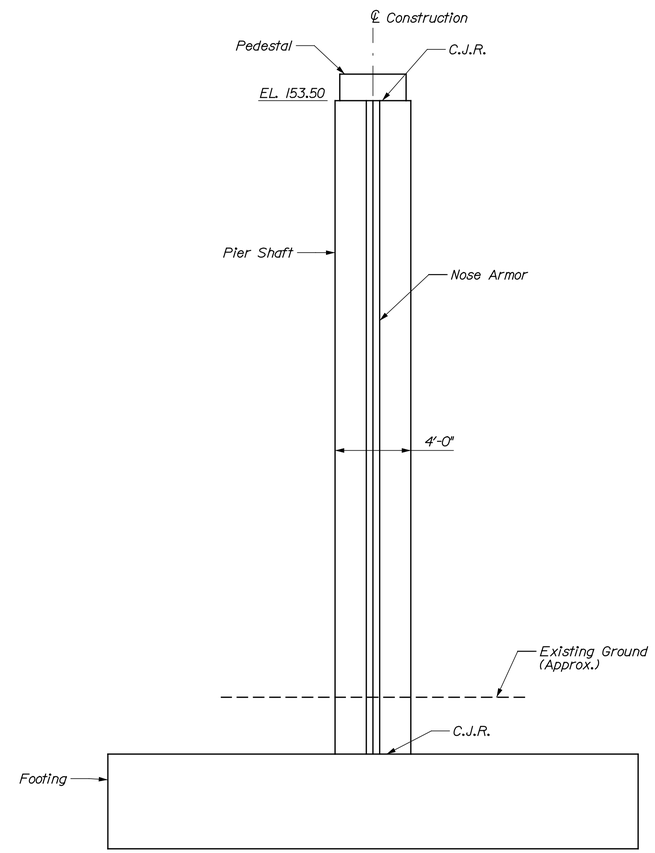

PIER NO. 2 END ELEVATION

Upstream End Shown. Downstream End Similar.

NOTES:

1. For Pier Notes, refer to "PIER 1 SHAFT PLAN & ELEVATION" sheet.
2. For Nose Armor Detail, refer to "PIER 1 SHAFT PLAN & ELEVATION" sheet.

LEGEND:

C.J. = Construction Joint
C.J.R. = Construction Joint, Roughen Surface 1/4" profile Min. (Typ.)
W.P. = Working Point

T·Y·LIN INTERNATIONAL

STATE OF MAINE
DEPARTMENT OF TRANSPORTATION

BRIDGE PLANS

WIN 16705.00

BRIDGE NO. 2660

PROJ. MANAGER			
DESIGN-DETAILED	DSM	SAM	.
CHECKED-REVIEWED	RMH	RMH	.
DESIGN2-DETAILED2			
DESIGN3-DETAILED3			
REVISIONS 1			
REVISIONS 2			
REVISIONS 3			
REVISIONS 4			
FIELD CHANGES			

SIGNATURE

P.E. NUMBER

DATE

PENOBSCOT RIVER BRIDGE
PENOBSCOT RIVER
HOWLAND-ENFIELD PENOBSCOT COUNTY

PIER 2 SHAFT
PLAN & ELEVATION

SHEET NUMBER
76
OF 127

Filename: ...\MSTA\XXX_Pier 2_Plan_Elev.dgn Division: Username: Date:12/16/2014

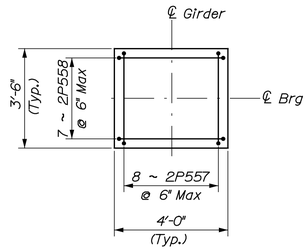

PEDESTAL REINFORCEMENT PLAN

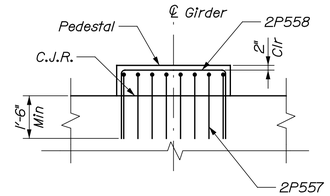

PEDESTAL REINFORCEMENT ELEVATION

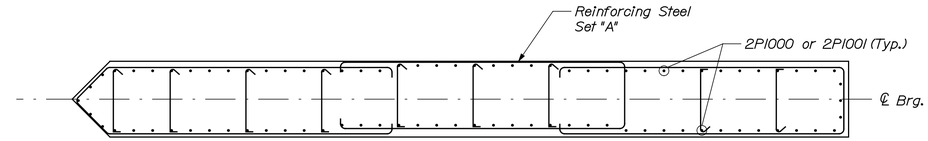

SECTION A-A

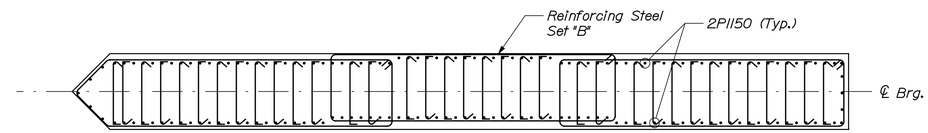

SECTION B-B

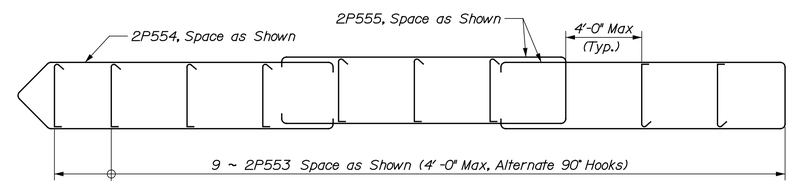

REINFORCING STEEL SET "A"

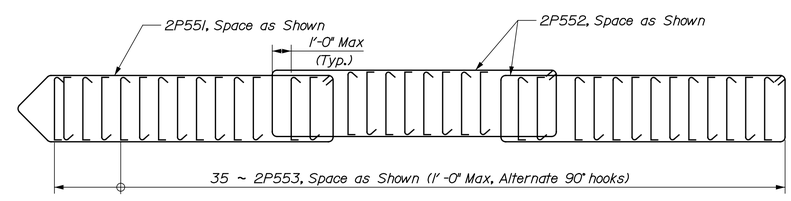

REINFORCING STEEL SET "B"

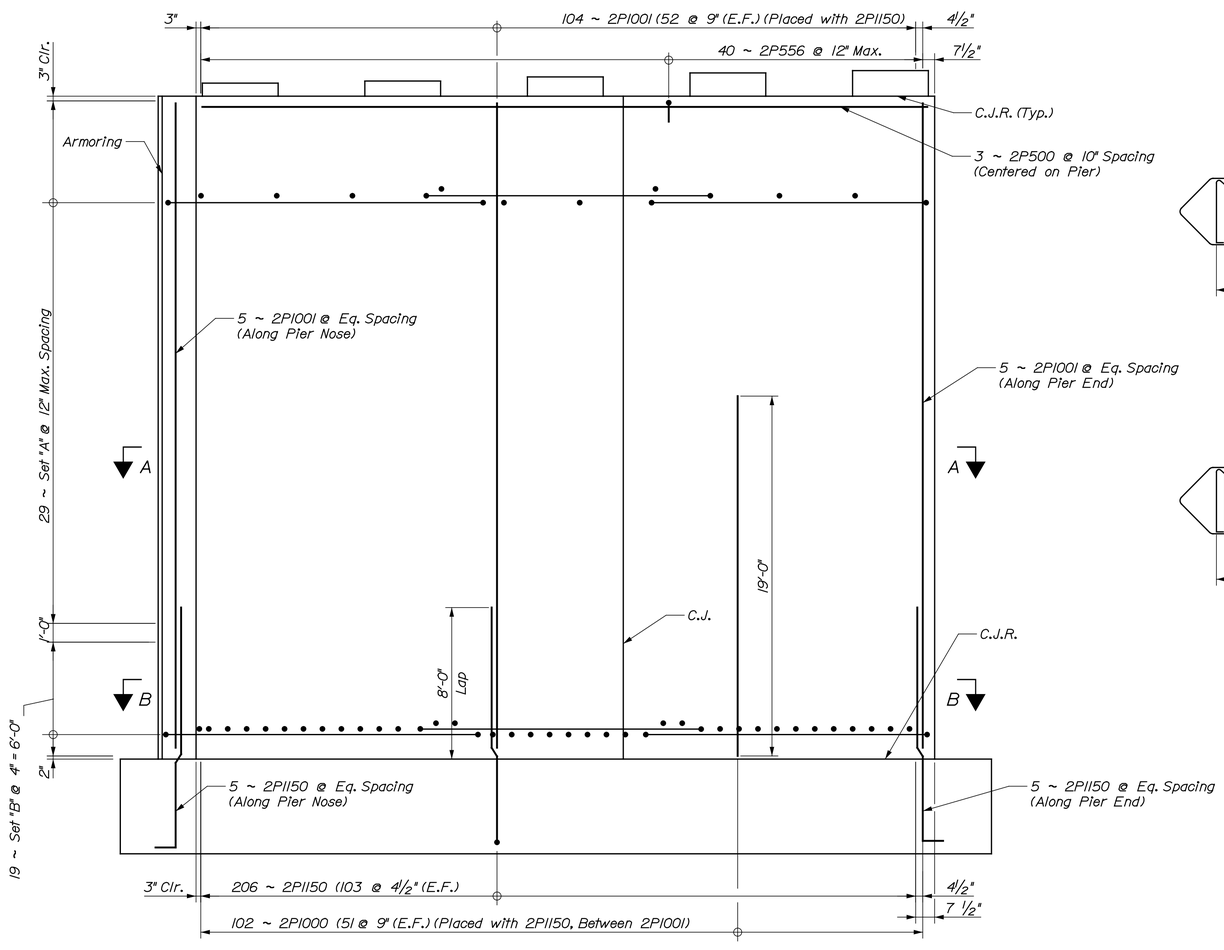

PIER NO. 2 ELEVATION

Flow

LEGEND:

C.J. = Construction Joint
C.J.R. = Construction Joint, Roughen Surface ¼" profile Min. (Typ.)
E.F. = Each Face

T·Y·LIN INTERNATIONAL

STATE OF MAINE
DEPARTMENT OF TRANSPORTATION

BRIDGE PLANS

WIN 16705.00

BRIDGE NO. 2660

PROJ. MANAGER		N.E.B.	BY	DATE
DESIGN-DETAILED	DSM			
CHECKED-REVIEWED	RMH			
DESIGN2-DETAILED2				
DESIGN3-DETAILED3				
REVISIONS 1				
REVISIONS 2				
REVISIONS 3				
REVISIONS 4				
FIELD CHANGES				

SIGNATURE

P.E. NUMBER

DATE

PENOBSCOT RIVER BRIDGE
PENOBSCOT RIVER
HOWLAND-ENFIELD PENOBSCOT COUNTY

PIER 2 REINFORCING PLAN & ELEVATION

SHEET NUMBER
77
OF 127

Filename: ...\XXX_Pier 2_Reinforcing_Plan_Elev.dgn Division: Username: Date:12/16/2014

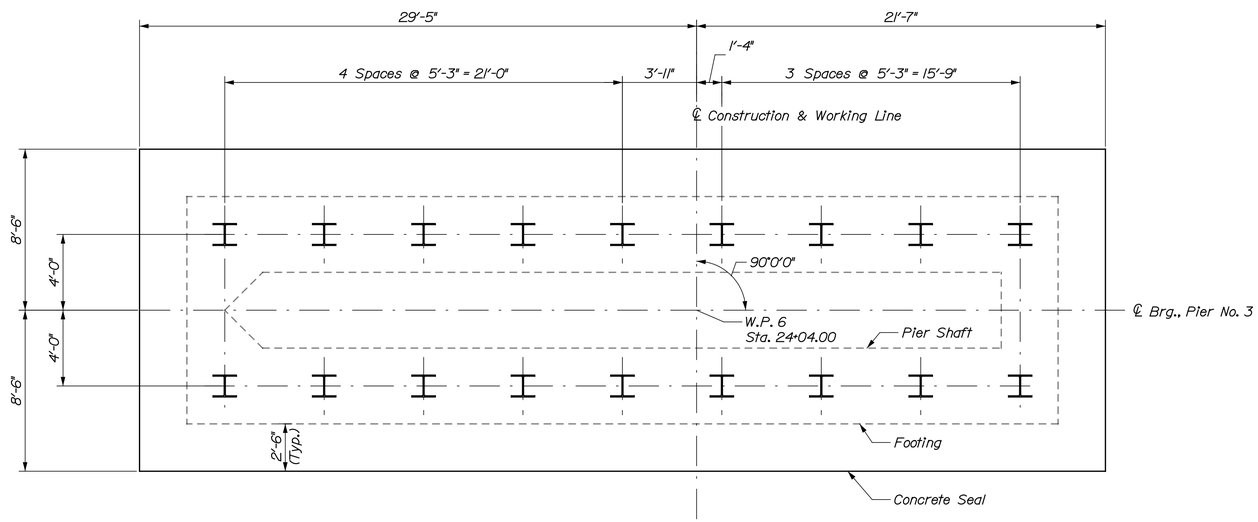

PIER NO. 3 PILE PLAN

Flow

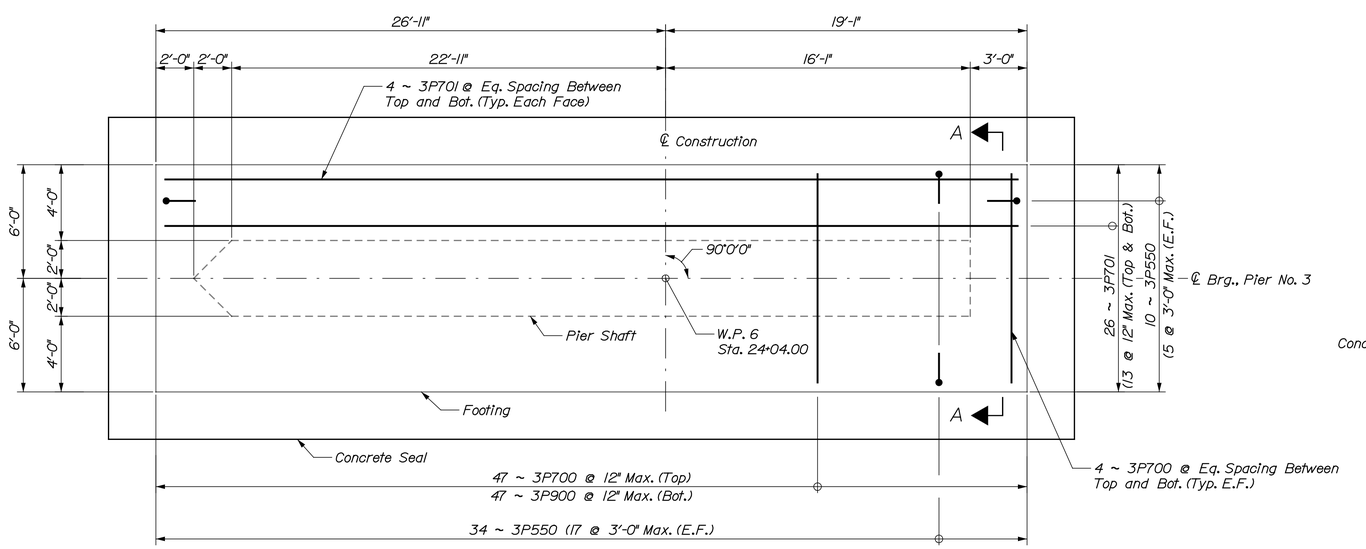

PIER NO. 3 FOOTING PLAN

Flow

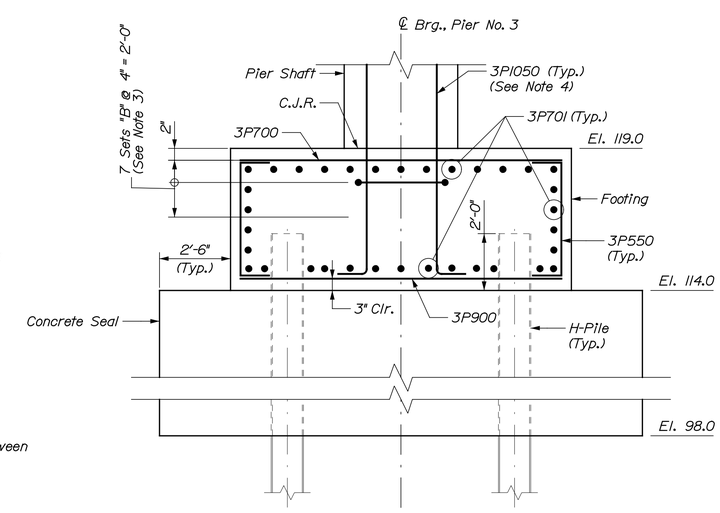

SECTION A-A

(Space Reinforcing around Piles)

NOTES:

1. See "PIER 1 FOOTING PLAN" for Seal Cofferdam Notes.
2. See "PIER 2 PILE LAYOUT PLAN" for Abutment and Pier Pile Notes.
3. See "PIER 3 REINFORCING PLAN & ELEVATION" for reinforcing steel set "B" bars.
4. See "PIER 3 REINFORCING PLAN & ELEVATION" for shaft dowel bar locations.

LEGEND:

C.J. = Construction Joint
C.J.R. = Construction Joint, Roughen Surface 1/4" profile Min. (Typ.)
W.P. = Working Point

STATE OF MAINE
DEPARTMENT OF TRANSPORTATION

BRIDGE PLANS

WIN 16705.00

BRIDGE NO. 2660

	N.B.	BY	DATE
PROJ. MANAGER			
DESIGN-DETAILED	DSM	SAM	.
CHECKED-REVIEWED	RMH	RMH	.
DESIGN2-DETAILED2			
DESIGN3-DETAILED3			
REVISIONS 1			
REVISIONS 2			
REVISIONS 3			
REVISIONS 4			
FIELD CHANGES			

SIGNATURE

P.E. NUMBER

DATE

PENOBSCOT RIVER BRIDGE
PENOBSCOT RIVER
HOWLAND-ENFIELD PENOBSCOT COUNTY

PIER 3 PILE & FOOTING PLAN

T·Y·LIN INTERNATIONAL

SHEET NUMBER

Date:12/16/2014 Username: Division: Filename: ...\XXX_Pier 3_Pile_Footing_Plan.dgn

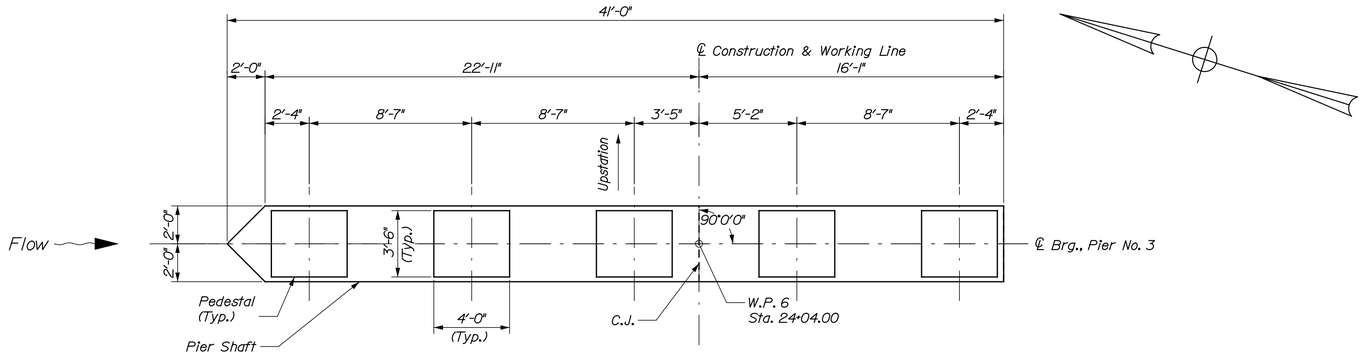

PIER NO. 3 SHAFT PLAN

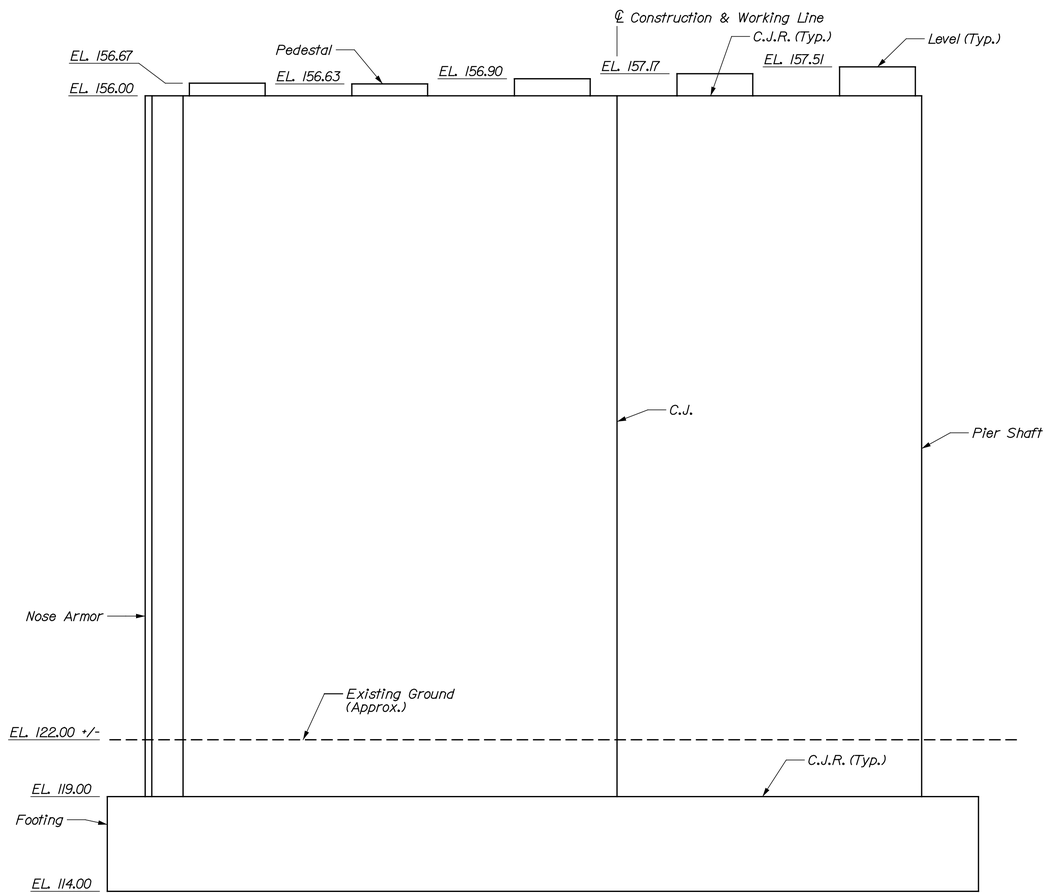

PIER NO. 3 ELEVATION

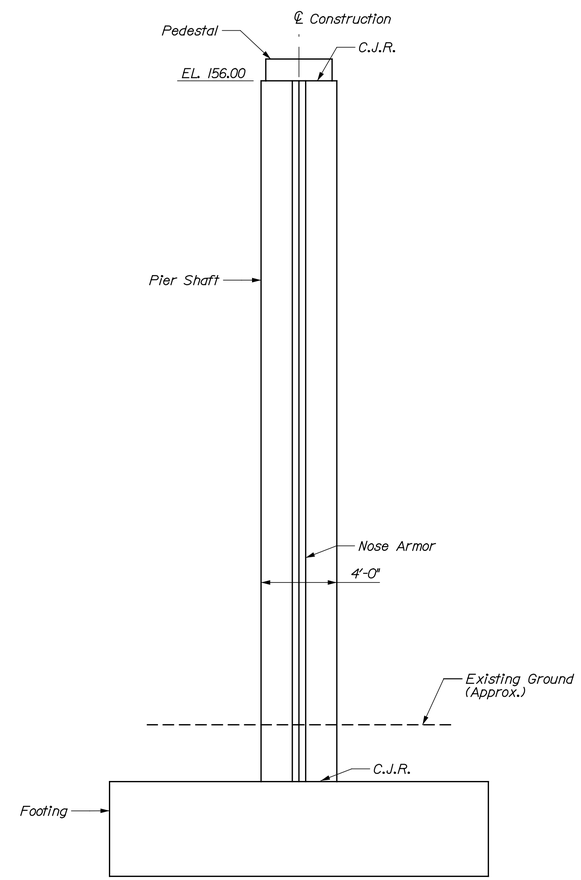

PIER NO. 3 END ELEVATION

Upstream End Shown. Downstream End Similar.

NOTES:

1. For Pier Notes, refer to " PIER 1 SHAFT PLAN & ELEVATION" sheet.
2. For Nose Armor Detail, refer to "PIER 1 SHAFT PLAN & ELEVATION" sheet.

LEGEND:

C.J. = Construction Joint
C.J.R. = Construction Joint, Roughen Surface 1/4" profile Min. (Typ.)
W.P. = Working Point

T·Y·LIN INTERNATIONAL

STATE OF MAINE
DEPARTMENT OF TRANSPORTATION

BRIDGE PLANS

WIN 16705.00

BRIDGE NO. 2660

PROJ. MANAGER		BY	DATE
DESIGN-DETAILED	DSM	SAM	.
CHECKED-REVIEWED	RMH	RMH	.
DESIGN2-DETAILED2			
DESIGN3-DETAILED3			
REVISIONS 1			
REVISIONS 2			
REVISIONS 3			
REVISIONS 4			
FIELD CHANGES			

SIGNATURE

P.E. NUMBER

DATE

PENOBSCOT RIVER BRIDGE
PENOBSCOT RIVER
HOWLAND-ENFIELD PENOBSCOT COUNTY

PIER 3 SHAFT
PLAN & ELEVATION

SHEET NUMBER

79

OF 127

Filename: ...\MSTA\XXX_Pier 3_Plan_Elev.dgn Division: Username: Date:12/16/2014

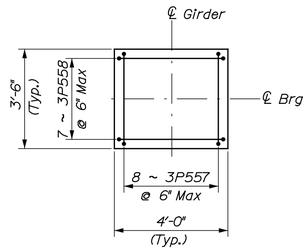

PEDESTAL REINFORCEMENT PLAN

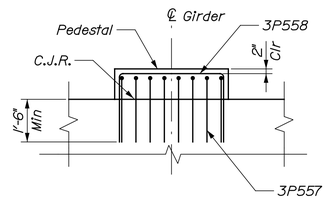

PEDESTAL REINFORCEMENT ELEVATION

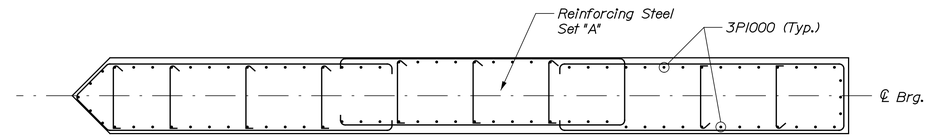

SECTION A-A

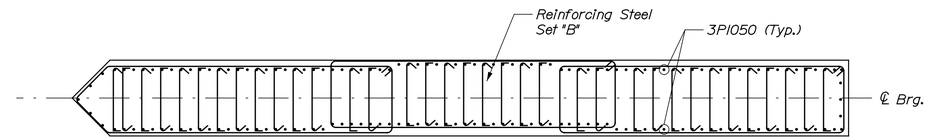

SECTION B-B

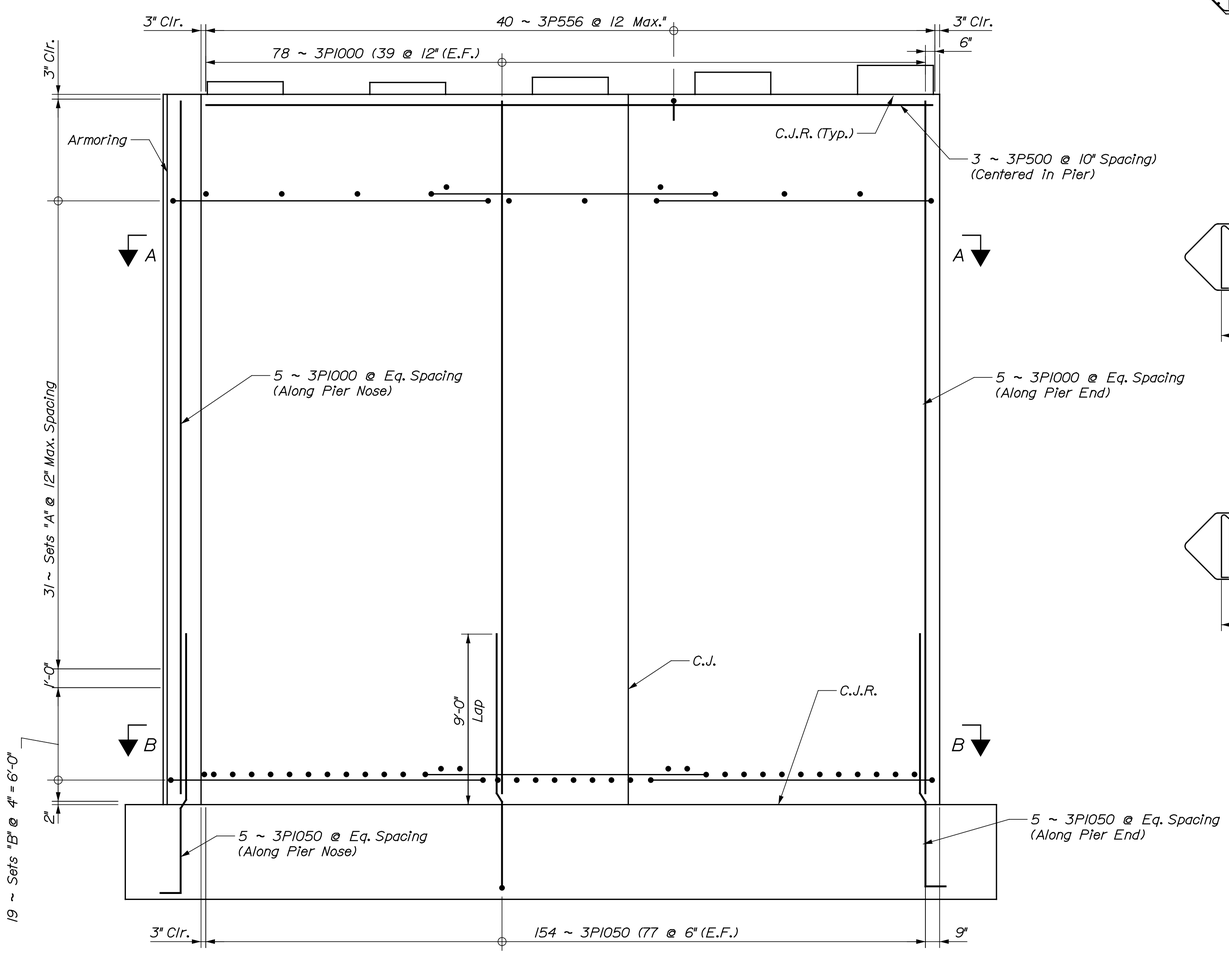

PIER NO. 3 ELEVATION

Flow

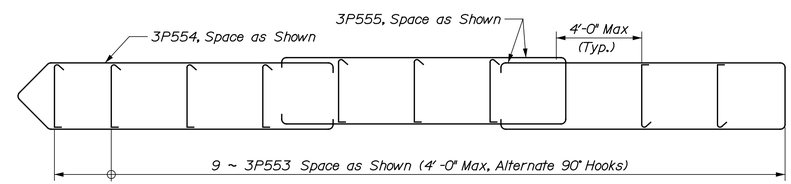

REINFORCING STEEL SET "A"

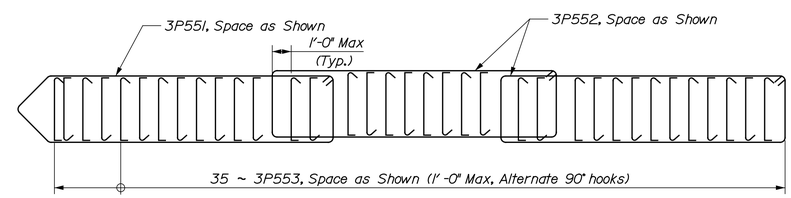

REINFORCING STEEL SET "B"

LEGEND:

C.J. = Construction Joint
C.J.R. = Construction Joint, Roughen Surface 1/4" profile Min. (Typ.)
E.F. = Each Face

STATE OF MAINE
DEPARTMENT OF TRANSPORTATION

BRIDGE PLANS

WIN 16705.00

BRIDGE NO. 2660

SIGNATURE

P.E. NUMBER

DATE

PROJ. MANAGER		N.B.	BY	DATE
DESIGN-DETAILED	DSM		SAM	.
CHECKED-REVIEWED	RMH		RMH	.
DESIGN2-DETAILED2				
DESIGN3-DETAILED3				
REVISIONS 1				
REVISIONS 2				
REVISIONS 3				
REVISIONS 4				
FIELD CHANGES				

PENOBSCOT RIVER BRIDGE
PENOBSCOT RIVER
HOWLAND-ENFIELD PENOBSCOT COUNTY

PIER 3 REINFORCING PLAN & ELEVATION

T·Y·LIN INTERNATIONAL

SHEET NUMBER

Date:12/16/2014

Username:

Filename: ...\XXX_Pier 3_Reinforcing_Plan_Elev.dgn Division:

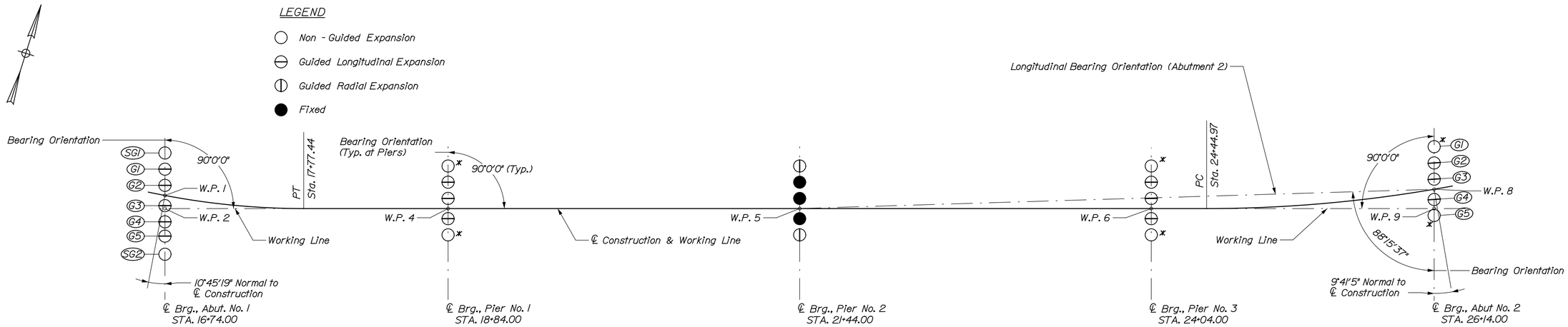

DISC BEARING LAYOUT PLAN

* Guided Longitudinal Expansion Bearings may be used.

BEARING NOTES:

1. The actual dimension "H" shall be the responsibility of the Contractor. Dimensions and sizes of plates not shown are dependent on design loads, bearing type, capacity, and the manufacturer of the bearings. The shop drawings, prepared by the manufacturer, shall provide all pertinent bearing information. The final bridge seat elevations shall be determined by the Contractor and submitted with the shop drawings for approval prior to construction of the substructure units.
2.
3. Masonry plates shall be placed on 1/8" thick preformed pads in accordance with the specifications.
4. Anchor rod spacing shall be coordinated with the bearing manufacturer.
5. Bearing installation shall be in strict conformance with the Standard Specifications Section 523 and the manufacturer's recommendations.
6. The abbreviation "PTFE" indicates polytetrafluoroethylene.
7. The design temperature range shall be 125°F (-20°F to 105°F).
8. In the disk bearing setting corrections table, a negative dimension (-1 1/8) indicates a downstation direction. A positive dimension (+1/2) indicates an upstation direction.
9. All steel, unless otherwise specified, shall meet the requirements of ASTM A709/A709M, Grade 50W.
10. All bearings shall be marked prior to shipping. The marks shall include the bearing locations on the bridge, and a direction arrow that points upstation. All marks shall be permanent and shall be visible after the bearing is installed.
11. Temperatures shown in the Bearing Setting Corrections Section of the "Disk Bearing Table" are those of the steel girders and not necessarily the ambient air temperature.
12. Design of the sole plates, masonry plates, and anchor rods is the responsibility of the bearing Manufacturer. Payment for these shall be made under item, 523.5551, Pot or Disc Bearings, Fixed or Item 523.5552, Pot or Disc Bearing, Expansion as applicable.
13. Strength Limit State rotations shown in the Bearing Table do not include allowances for uncertainties, fabrication, or installation, as defined in AASHTO LRFD Bridge Design Specifications, 6th Edition 2012.
14. Bearing Sole Plate Bevel % is positive upstation.
15. Coordinate placement of the anchor rods with placement of reinforcing steel.

BEARING TABLE

Location	Girder	Bearing Type	Vertical				Horizontal						Dim. "H" (in) (Note No. 1)	Design Rotation (radians) (Note No. 13)		Total Long. Movement (in.)
			Strength	Extreme Event	Service		Strength		Extreme Event		Service					
			Total Load	Total Load	Dead Load	Total Load	Logitudinal	Transverse	Logitudinal	Transverse	Logitudinal	Transverse		Dead Load	Live Load	
Abut. No. 1	1 & 5	Guided Longitudinally	555	305	160	360	10 **	25	20 *	45	10 **	15	6.875	0.005	0.008	5.50
	2, 3, & 4	Guided Longitudinally	390	255	160	265	10 **	25	15 *	45	10 **	15	6.875	0.005	0.006	5.50
	SG1 & SG2	Non-Guided	265	150	80	175	10 **	20 **	10 *	10 *	10 **	10 **	5.375	0.001	0.004	5.50
Pier No. 1	1 & 5	Non-Guided	1165	870	590	825	20 **	50 **	45 *	45 *	15 **	30 **	6.75	0.003	0.007	3.05
	2, 3, & 4	Guided Longitudinally	1165	870	590	825	20 **	80	45 *	225	15 **	45	10.375	0.002	0.005	3.05
Pier No. 2	1 & 5	Guided Transversely	1090	795	535	765	75	55 **	190	40 *	40	30 **	6.75	0.000	0.007	-
	2, 3, & 4	Fixed	1090	795	535	765	75	90	190	210	40	50	8	0.000	0.005	-
Pier No. 3	1 & 5	Non-Guided	1165	870	590	825	20 **	50 **	45 *	45 *	15 **	30 **	6.75	0.003	0.007	3.05
	2, 3, & 4	Guided Longitudinally	1165	870	590	825	20 **	80	45 *	225	15 **	45	10.375	0.002	0.005	3.05
Abut. No. 2	1 & 5	Non-Guided	475	315	200	330	15 **	25 **	20 *	20 *	10 **	15 **	5.375	0.007	0.010	5.50
	2, 3, & 4	Guided Longitudinally	435	285	180	295	15 **	40	15 *	65	10 **	25	6.875	0.007	0.007	5.50

* Horizontal Extreme Event loads for untrestrained directions will equal maximum horizontal load that can be transferred via friction of the sliding surface (values shown are estimated based on a coefficient of friction of 0.05)

** Horizontal loads for unrestrained directions assume no slip of the sliding surface. If maximum horizontal force transmitted via friction of the sliding surface is less, use the friction-based limiting load instead.

BEARING SETTING CORRECTIONS TABLE

	Dimension "X" (in)					
	15° F	30° F	45° F	60° F	75° F	90° F
Abutment No. 1	1 1/8	1/2	0	-1/2	-1 1/8	-1 5/8
Pier No. 1	1/2	1/4	0	-1/4	-1/2	-3/4
Pier No. 2	0	0	0	0	0	0
Pier No. 3	-1/2	-1/4	0	1/4	1/2	3/4
Abutment No. 2	-1 1/8	-1/2	0	1/2	1 1/8	1 5/8

BEARING SOLE PLATE BEVEL (%)

	ABUTMENT 1	PIER 1	PIER 2	PIER 3	ABUTMENT 2
SG1	1.07	-	-	-	-
Girder 1	0.00	1.18	1.00	0.91	2.27
Girder 2	0.00	1.18	1.00	0.91	1.90
Girder 3	0.00	1.18	1.00	0.91	1.55
Girder 4	1.30	1.18	1.00	0.91	1.22
Girder 5	1.30	1.18	1.00	0.91	0.99
SG2	1.66	-	-	-	-

T·Y·LIN INTERNATIONAL

STATE OF MAINE
DEPARTMENT OF TRANSPORTATION

BRIDGE PLANS

WIN 16705.00

BRIDGE NO. 2660

PROJ. MANAGER		N.L.B.	BY	DATE
DESIGN-DETAILED	DSM	SAM		
CHECKED-REVIEWED	RMH	RMH		
DESIGN2-DETAILED2				
DESIGN3-DETAILED3				
REVISIONS 1				
REVISIONS 2				
REVISIONS 3				
REVISIONS 4				
FIELD CHANGES				

SIGNATURE

P.E. NUMBER

DATE

PENOBSCOT RIVER BRIDGE
PENOBSCOT RIVER
HOWLAND-ENFIELD PENOBSCOT COUNTY

BEARING LAYOUT

SHEET NUMBER
81
OF 127

Date:12/16/2014
Username:
Division:
Filename: ...\XXX_Disc_Bearing_Layout.dgn

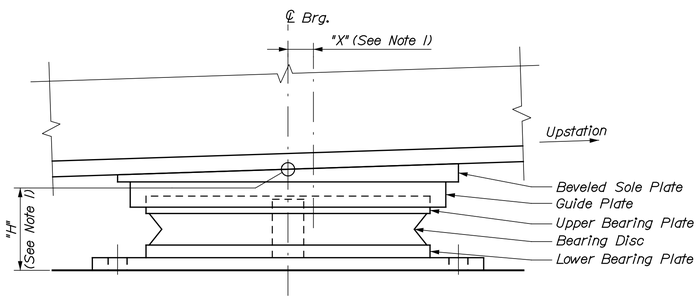

LONGITUDINAL ELEVATION

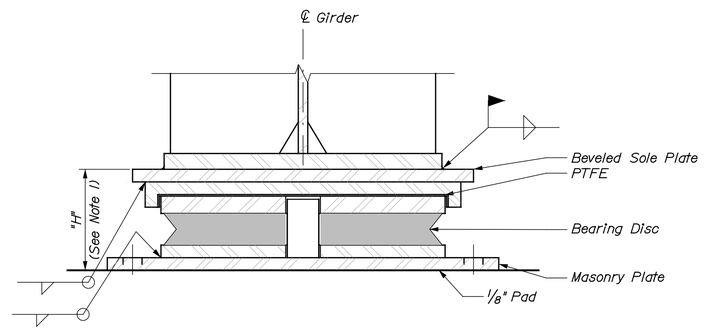

TRANSVERSE SECTION

GUIDED BEARING

(Guided Longitudinally Shown, Guided Transversely Similar)

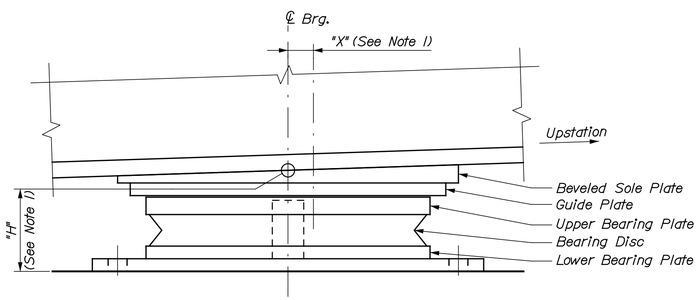

LONGITUDINAL ELEVATION

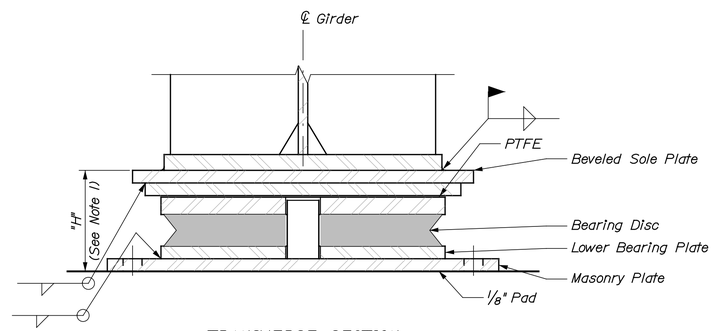

TRANSVERSE SECTION

NON-GUIDED BEARING

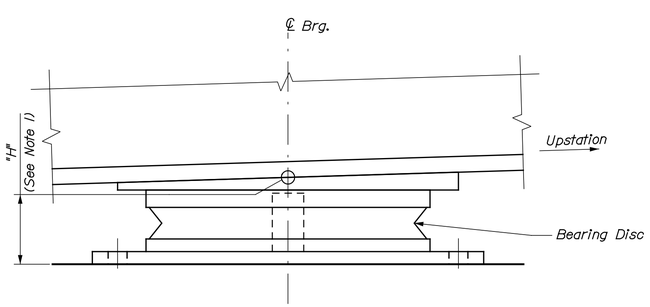

LONGITUDINAL ELEVATION

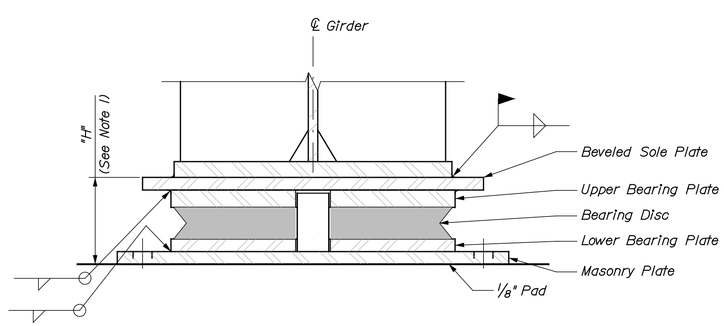

TRANSVERSE SECTION

FIXED BEARING

Note:

1. See "BEARING LAYOUT" drawing for Dim "X" and "H".

T·Y·LIN INTERNATIONAL

STATE OF MAINE
DEPARTMENT OF TRANSPORTATION

BRIDGE PLANS

WIN 16705.00

BRIDGE NO. 2660

PROJ. MANAGER	N.E.B.	BY	DATE
DESIGN-DETAILED	DSM	SAM	.
CHECKED-REVIEWED	RMH	RMH	.
DESIGN2-DETAILED2			
DESIGN3-DETAILED3			
REVISIONS 1			
REVISIONS 2			
REVISIONS 3			
REVISIONS 4			
FIELD CHANGES			

SIGNATURE

P.E. NUMBER

DATE

PENOBSCOT RIVER BRIDGE
PENOBSCOT RIVER
HOWLAND-ENFIELD PENOBSCOT COUNTY

BEARING DETAILS

SHEET NUMBER
82
OF 127

Filename: ...\XXX_Disc_Bearing_Details.dgn Division: Username: Date:12/16/2014

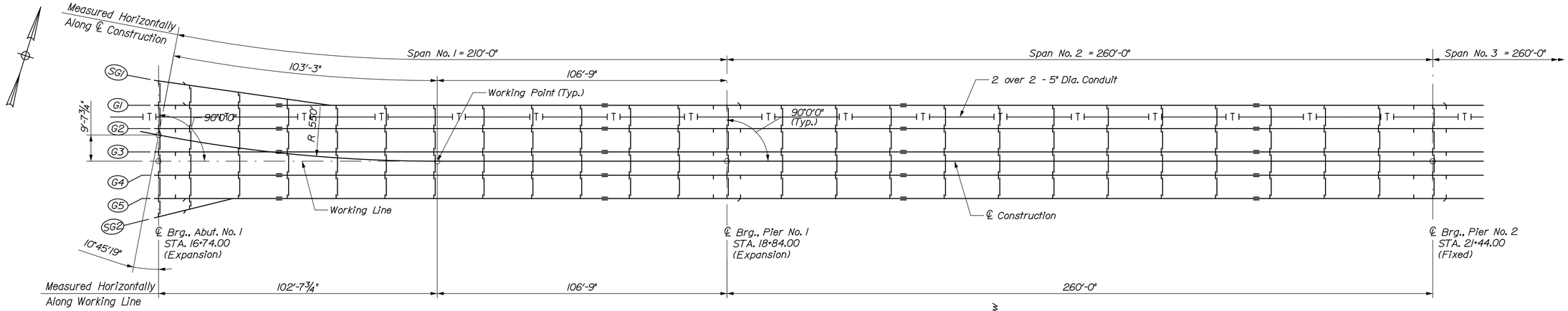

FRAMING LAYOUT PLAN - SPANS 1 & 2

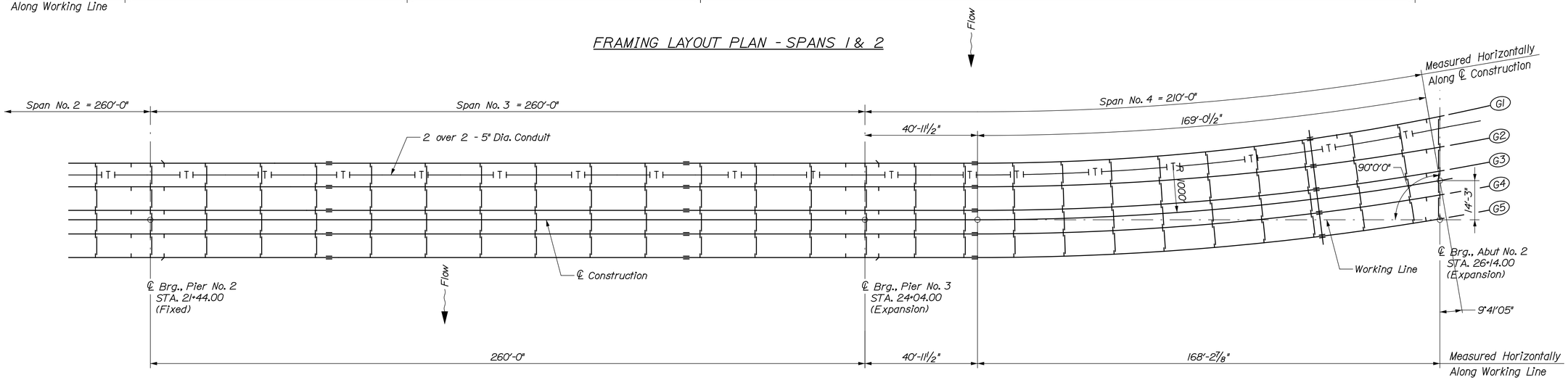

FRAMING LAYOUT PLAN - SPANS 3 & 4

STRUCTURAL STEEL NOTES:

1. Girders may be either heat curved or cut curved in accordance with AASHTO specifications at the option of the Contractor.
2. Camber ordinates, as shown, are computed to compensate for all dead load deflections and for super elevation of the finished grade.
3. No transverse butt - weld splices will be allowed in the flange plates or web plates within 10 ft. or 10 percent of the span length (whichever is greater) from the points of maximum negative moment or maximum positive moment. Butt - weld splices in flanges shall be not less than 3 ft. from tranverse butt - welds in the web plates and no transverse web or flange butt - welds shall be located within 3 ft. of other transverse welds (e.g. connection plates to web welds) on either flange or web. No tranverse butt - weld splices will be allowed in areas of stress reversal.
4. Sections of flange plates or web plates between transverse shop splices or between a transverse shop splice and a field splice shall be not less than 20 ft. in length unless otherwise shown on the plans.
5. One longitudinal butt weld splice will be allowed in the web of the haunched sections of the girders. Feather edges between the longitudinal welds and the bottom flanges will not be allowed.
6. At locations marked with an asterisk (*), the designated cross frames may be changed to a Type D, cross frame to accomodate the Contractor's deck placement sequence. No extra compensation will be allowed for any cross frames so substituted, and any additional costs will be considered incidental to the contract items.
7. Bolted field splice connections shall be made using ⅞" diameter, ASTM A325 Type 3 H.S. bolts. Hole size shall be 15/16" diameter unless otherwise shown. Bolt threads shall be excluded from the shear plane of field splice connections.
8. Steel for cross frames, connection plates and stiffeners shall be ASTM A709, Grade 50W.
9. Bearing stiffeners shall be plumb after erection and dead loading of the structure. Intermediate web stiffeners may be either plumb or normal to the top flange.
10. Cross frame connection plates may be either plumb or normal to the top flange.
11. All cross frames except those at Abutment No. 2 bearing location are normal to straight griders and radial to curved girders.
12. Bolted cross frame connections shall be made using ⅞" diameter, ASTM A325 Type 3 H.S. bolts. Hole size shall be 15/16" diameter. The minimum edge distance shall be 1¾" unless otherwise shown. Oversized or short-slotted holes are not permitted for use in cross frame connections.
13. Connection plates shall be 9/16" minimum thickness and 9" minimum width. The plate thicknesses and widths for stiffeners shall be as shown on the "GIRDER ELEVATION" drawing.
14. Connection plates shall be full web depth and shall be welded to flanges.
15. Bearing stiffeners shall be mill - to - bear on the bottom flange and tight fit to the top flange. Bearing stiffeners used as connection plates shall be welded to flanges.
16. Stiffeners not used as connection plates shall be welded to the web only.
17. Cross frames shall be detailed and fabricated to fit under full dead load.
18. Girder webs shall be vertical under full dead load.
19. Prior to structural steel erection, the Contractor shall submit an erection sequence to the Resident for approval.
20. The "Drip Plate" detail is for use on the exterior girders only.
21. In addition to the requirements of the Standard Specifications, outside and bottom surfaces of fascia girders shall be blast - cleaned to SSPC SP-6 after fabrication and prior to delivery in order to present a uniform appearance free of dirt, oil or other deleterious material.
22. Girder ends and end cross frames shall be coated to a distance of 13 ft. from the centerline of bearing at the abutments in accordance with Standard Specifications Section 506, Shop Applied Protection Coating Steel (Zinc Rich Coating System).
23. A minimum of two adjacent girders and adjoining cross frames shall be erected in a given span prior to erecting the following span. At no time shall more than two girder segments of a single girder be erected without being connected to an adjacent girder through the use of cross frames.
24. Prior to erection of the structural steel, the Contractor shall wrap abutments and piers with polyethylene sheeting. The polyethylene sheeting shall remain in place and kept free from any tears or separations until the deck slab has been placed. After removing the polyethylene sheeting, the Contractor shall thoroughly clean the abutments and piers of all stains by a method approved by the Resident. Payment will be considered incidental to related contract items.
25. All web, flange and field splice plates in tension or stress reversal areas and all cross frame members (including connection plates) shall conform to zone 2 Charpy V-notch impact test requirements of AASHTO M270.
26. Diaphragm Type D Diagonals shall be L 4x4x 3/8.
27. Utility Conduit Bank shall be supported on bottom chord of diaphram/crossframe. See Utility Hanger Detail on Framing Plan Span No. 2.

(Structural Steel Notes continued on Framing Plan Span No. 1)

T·Y·LIN INTERNATIONAL

STATE OF MAINE
DEPARTMENT OF TRANSPORTATION

BRIDGE PLANS

WIN 16705.00

BRIDGE NO. 2660

PROJ. MANAGER	N.B.	BY	DATE
DESIGN-DETAILED	DSM	SAM	.
CHECKED-REVIEWED	RMH	RMH	.
DESIGN2-DETAILED2			
DESIGN3-DETAILED3			
REVISIONS 1			
REVISIONS 2			
REVISIONS 3			
REVISIONS 4			
FIELD CHANGES			

SIGNATURE

P.E. NUMBER

DATE

PENOBSCOT RIVER BRIDGE
PENOBSCOT RIVER
HOWLAND-ENFIELD PENOBSCOT COUNTY

FRAMING LAYOUT PLAN

SHEET NUMBER

83

OF 127

Filename: ...\XXX_Framing_Layout_Plan.dgn Division: Username: Date:12/16/2014

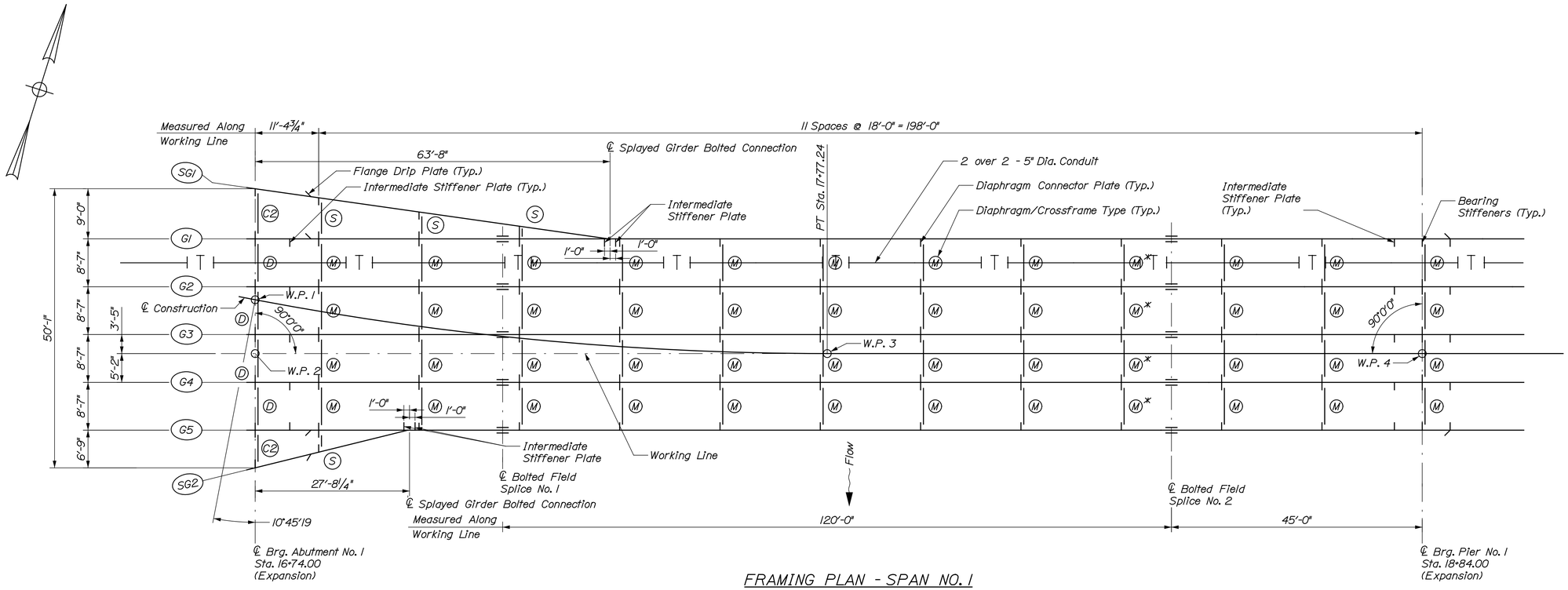

FRAMING PLAN - SPAN NO. 1

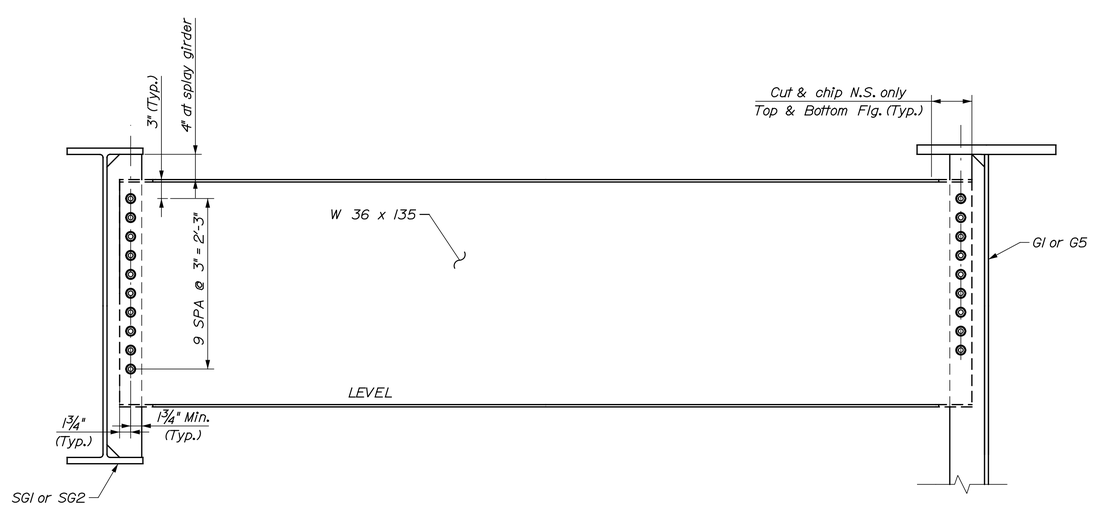

Diaphragm Type S

STRUCTURAL STEEL NOTES CONT:

28. The Contractor shall submit Bridge Steel Erection Plans to the Resident a minimum of fourteen (14) days prior to commencing work. Do not erect bridge steel until the Resident has reviewed and returned the Bridge Steel Erection Plans.

29. The Contractor shall submit Bridge Steel Erection Plans in accordance with Section 504 for the method and sequence of structural steel erection, the temporary bracing, and the equipment to be used for the erection. The Bridge Steel Erection Plans shall include the necessary computations to indicate the magnitude of stress in the segments during erection, to demonstrate that allowable stresses during erection are not exceeded, and that member capacities and final geometry shall be correct.

30. The Bridge Steel Erection Plans shall include the necessary computations to demonstrate that all of the erection equipment has adequate capacity for the work to be performed.

31. The Bridge Steel Erection Plans shall contain provisions for all stages of construction, including temporary stoppages.

32. The Contractor shall include additional information in the Bridge Steel Erection Plans for curved girders as indicated in AASHTO LRFD Bridge Construction Specifications Section 11.8.2.

33. The Bridge Steel Erection Plans shall be stamped by a Professional Engineer licensed in the State of Maine.

34. The Contractor shall be responsible for providing temporary bracing or stiffening devices to accommodate handling stresses in individual members or segments of the structure during erection.

35. During erection the Contractor shall be responsible for supporting segments of the structure in a manner that will produce the proper alignment and camber in the completed structure. Cross frames and diagonal bracing shall be installed as necessary during the erection process to provide stability and assure the correct geometry. Temporary bracing, if necessary at any stage of erection, shall be provided by the Contractor.

LEGEND

(D) = Diaphragm Type D
See Note # 26 on "FRAMING LAYOUT PLAN" and "Maine DOT Std. Details 504(02)"

(M) = Crossframe Type M
See "Maine DOT Std. Details 504(06)"

(S) = Diaphragm Type S

(C2) = Crossframe Type C2
See "Maine DOT Std. Details 504(01)"

* = See "Framing Layout Plan," Note 6

T·Y·LIN INTERNATIONAL

STATE OF MAINE
DEPARTMENT OF TRANSPORTATION

BRIDGE PLANS

WIN 16705.00

BRIDGE NO. 2660

PROJ. MANAGER		NLB	BY	DATE
DESIGN-DETAILED	DSM		SAM	.
CHECKED-REVIEWED	RMH		RMH	.
DESIGN2-DETAILED2				
DESIGN3-DETAILED3				
REVISIONS 1				
REVISIONS 2				
REVISIONS 3				
REVISIONS 4				
FIELD CHANGES				

SIGNATURE

P.E. NUMBER

DATE

PENOBSCOT RIVER BRIDGE
PENOBSCOT RIVER
HOWLAND-ENFIELD PENOBSCOT COUNTY

FRAMING PLAN
SPAN NO. 1

SHEET NUMBER
84
OF 127

Date:12/16/2014
Username:
Division:
Filename: ...\XXX_Framing_Plan_Span 1.dgn

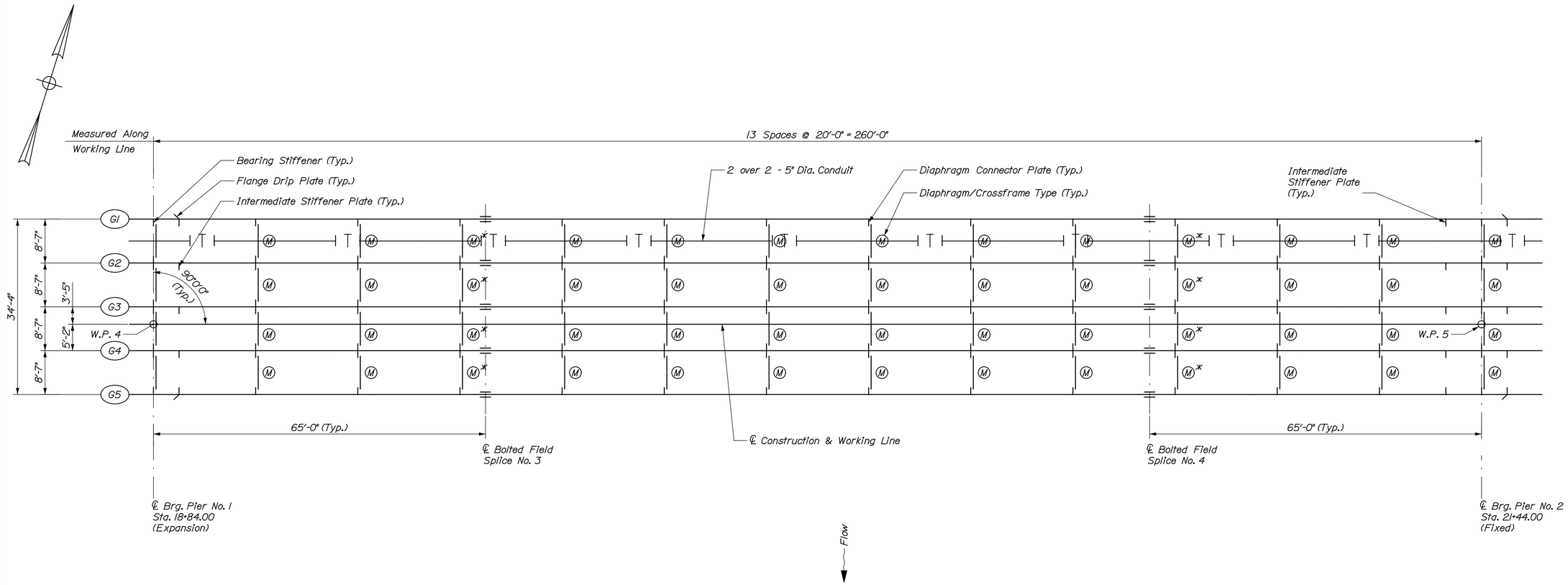

FRAMING PLAN - SPAN NO. 2

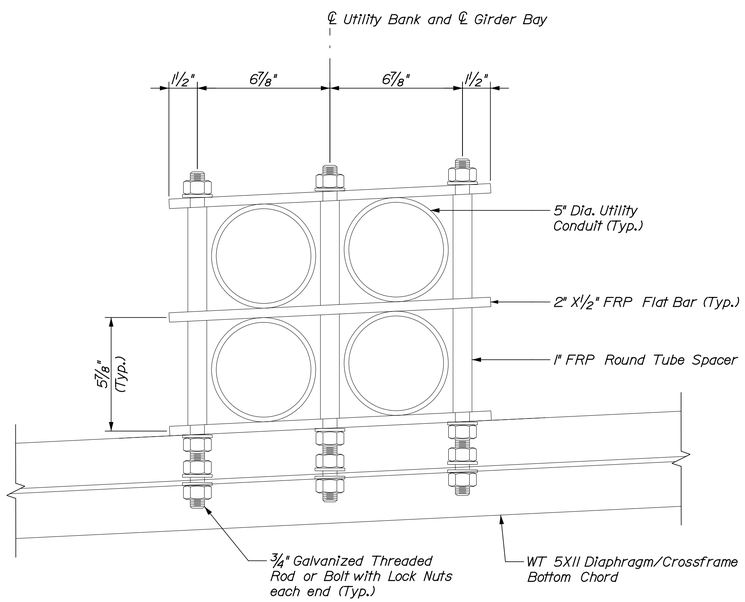

UTILITY HANGER CONDUIT DETAIL

LEGEND

(D) = Diaphragm Type D
See "Maine DOT Std. Details 504(02)"

(M) = Crossframe Type M
See Note #26 on "FRAMING LAYOUT PLAN" and "Maine DOT Std. Details 504(06)"

(C2) = Crossframe Type C2
See "Maine DOT Std. Details 504(01)"

* = See "Framing Layout Plan," Note 6

T·Y·LIN INTERNATIONAL

STATE OF MAINE
DEPARTMENT OF TRANSPORTATION

BRIDGE PLANS

WIN 16705.00

BRIDGE NO. 2660

PROJ. MANAGER	N.E.B.	BY	DATE
DESIGN-DETAILED	DSM	SAM	.
CHECKED-REVIEWED	RNH	RNH	.
DESIGN2-DETAILED2			
DESIGN3-DETAILED3			
REVISIONS 1			
REVISIONS 2			
REVISIONS 3			
REVISIONS 4			
FIELD CHANGES			

SIGNATURE

P.E. NUMBER

DATE

PENOBSCOT RIVER BRIDGE
PENOBSCOT RIVER
HOWLAND-ENFIELD PENOBSCOT COUNTY

FRAMING PLAN
SPAN NO. 2

SHEET NUMBER
85
OF 127

Filename: ...\XXX_Framing_Plan_Span 2.dgn Division: Username: Date:12/16/2014

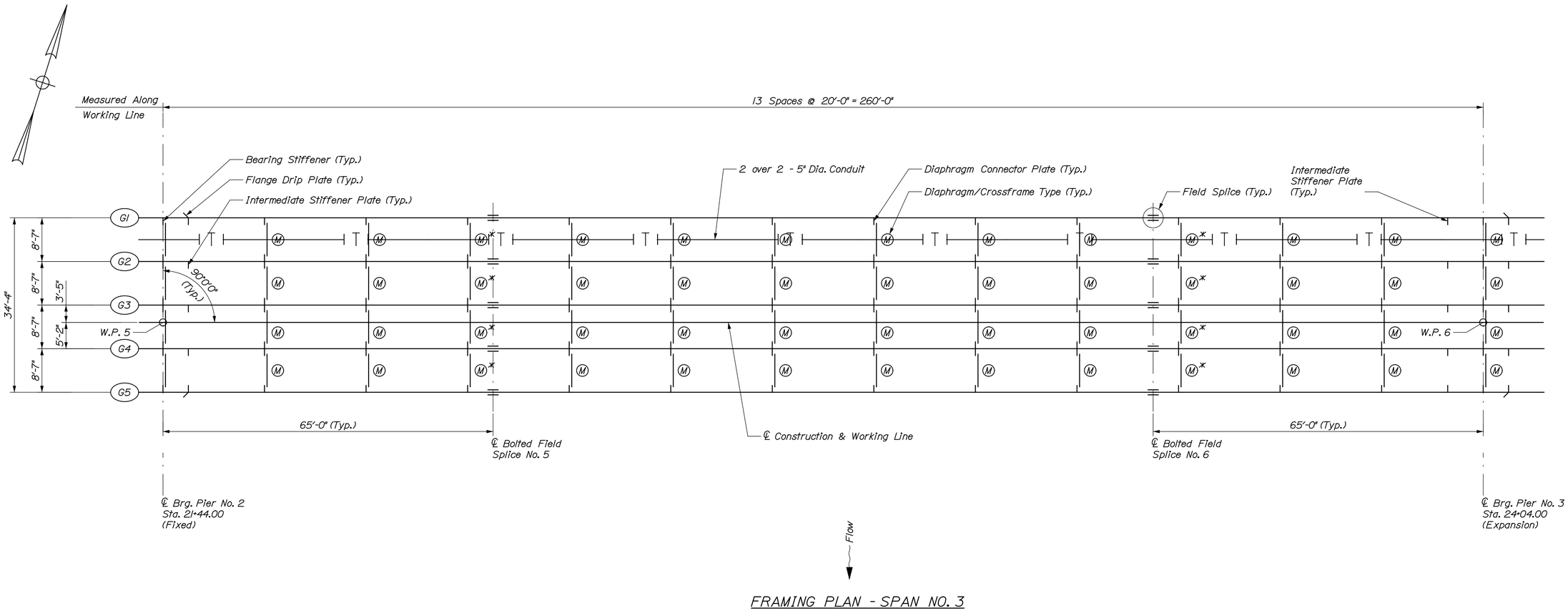

FRAMING PLAN - SPAN NO. 3

LEGEND

(D) = Diaphragm Type D
See Note #26 on "FRAMING LAYOUT PLAN" and "Maine DOT Std. Details 504(02)"

(M) = Crossframe Type M
See "Maine DOT Std. Details 504(06)"

(C2) = Crossframe Type C2
See "Maine DOT Std. Details 504(01)"

* = See "Framing Layout Plan," Note 6

T·Y·LIN INTERNATIONAL

STATE OF MAINE
DEPARTMENT OF TRANSPORTATION

BRIDGE PLANS

WIN 16705.00

BRIDGE NO. 2660

PROJ. MANAGER			
DESIGN-DETAILED	DSM	SAM	
CHECKED-REVIEWED	RNH	RNH	
DESIGN2-DETAILED2			
DESIGN3-DETAILED3			
REVISIONS 1			
REVISIONS 2			
REVISIONS 3			
REVISIONS 4			
FIELD CHANGES			

SIGNATURE

P.E. NUMBER

DATE

PENOBSCOT RIVER BRIDGE
PENOBSCOT RIVER
HOWLAND-ENFIELD PENOBSCOT COUNTY

FRAMING PLAN
SPAN NO. 3

SHEET NUMBER
86
OF 127

Filename: ...\XXX_Framing_Plan_Span 3.dgn Division: Username: Date:12/16/2014

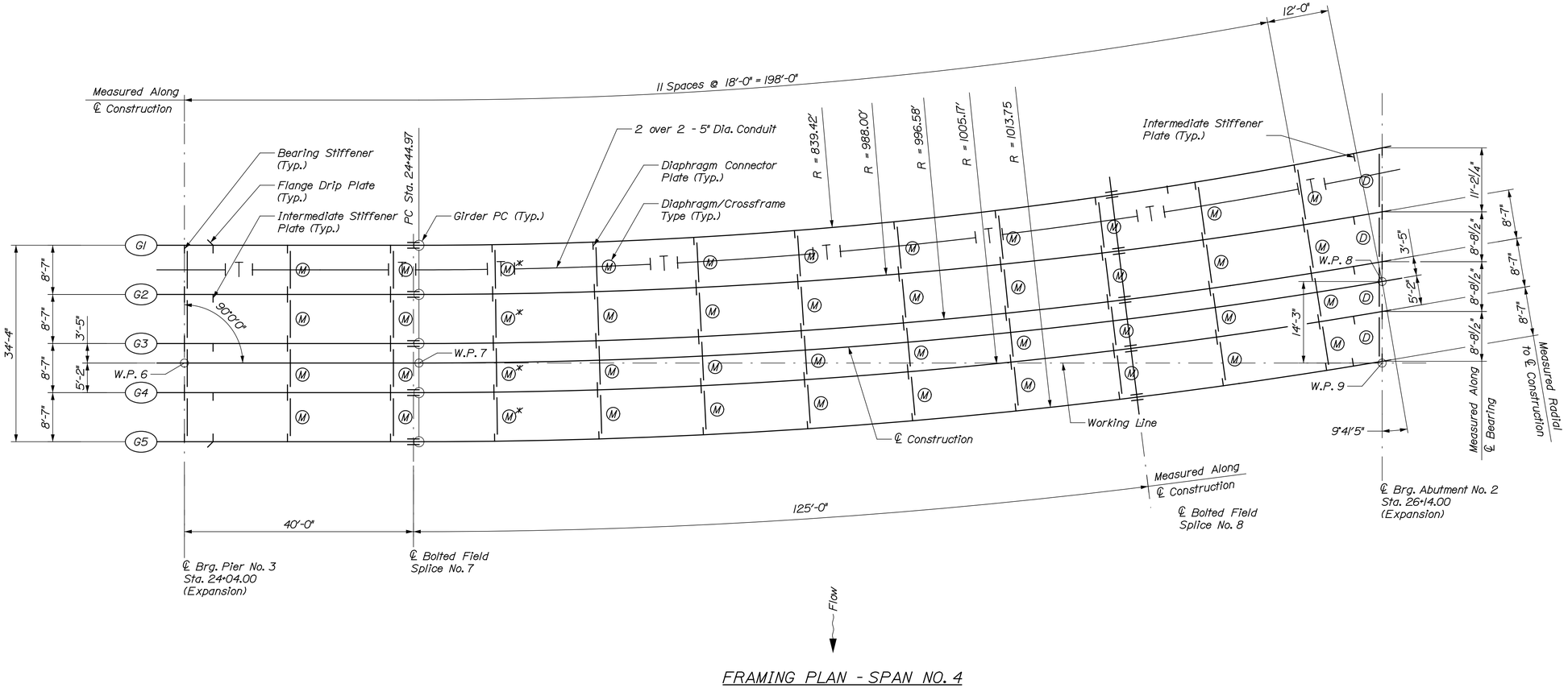

FRAMING PLAN - SPAN NO. 4

LEGEND

(D) = Diaphragm Type D
See Note #26 on "FRAMING LAYOUT PLAN" and "Maine DOT Std. Details 504(02)"

(M) = Crossframe Type M
See "Maine DOT Std. Details 504(06)"

(C2) = Crossframe Type C2
See "Maine DOT Std. Details 504(01)"

* = See "Framing Layout Plan," Note 6

T·Y·LIN INTERNATIONAL

STATE OF MAINE
DEPARTMENT OF TRANSPORTATION

WIN 16705.00

BRIDGE NO. 2660

BRIDGE PLANS

PROJ. MANAGER	NLB	BY	DATE
DESIGN-DETAILED	DSM	SAM	.
CHECKED-REVIEWED	RMH	RMH	.
DESIGN2-DETAILED2			
DESIGN3-DETAILED3			
REVISIONS 1			
REVISIONS 2			
REVISIONS 3			
REVISIONS 4			
FIELD CHANGES			

SIGNATURE

P.E. NUMBER

DATE

PENOBSCOT RIVER BRIDGE
PENOBSCOT RIVER
HOWLAND-ENFIELD PENOBSCOT COUNTY

FRAMING PLAN
SPAN NO. 4

SHEET NUMBER
87
OF 127

Filename: ...\XXX_Framing_Plan_Span 4.dgn Division: Username: Date:12/16/2014

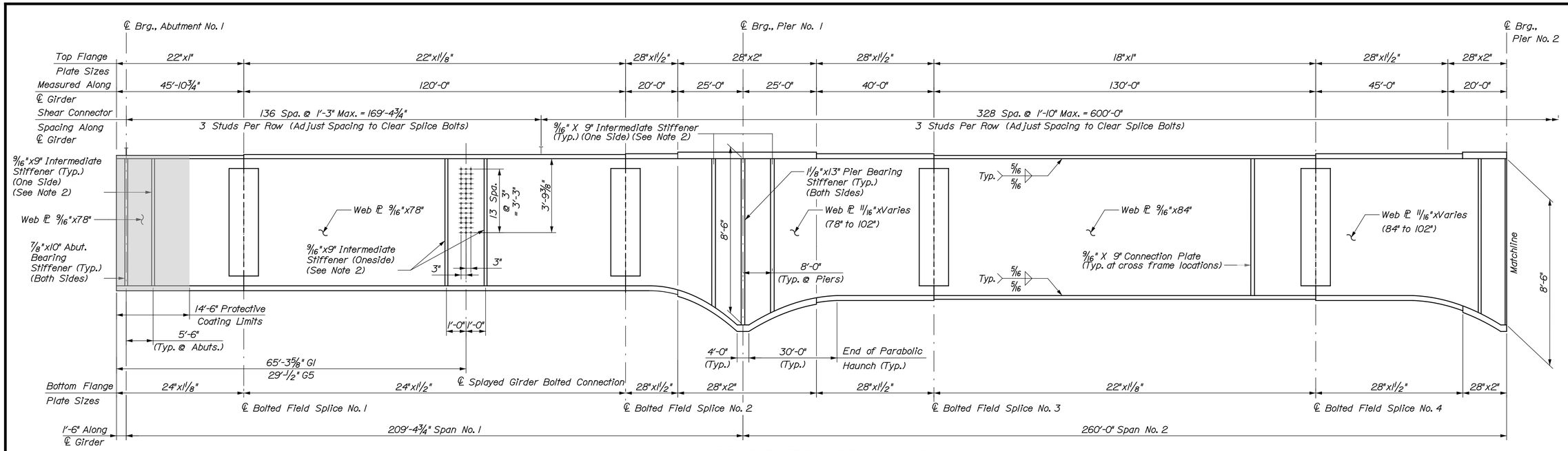

GIRDER ELEVATION (SPANS 1 & 2)

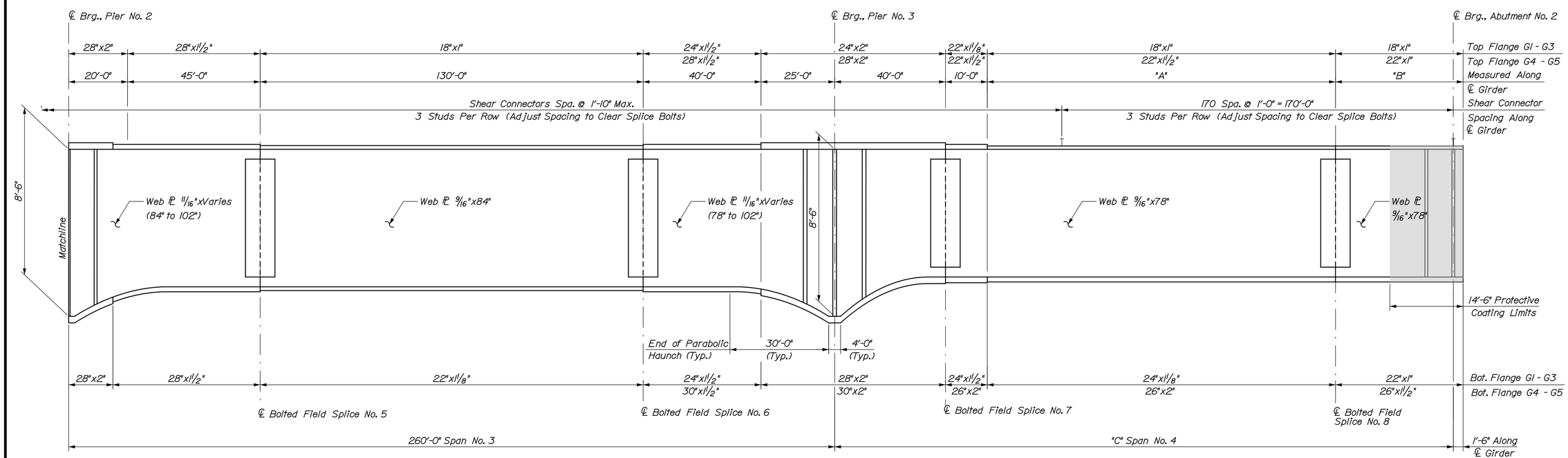

GIRDER ELEVATION (SPANS 3 & 4)

TABLE OF GIRDER PIECE DIMENSIONS

Girder	A	B	C
1	112'-7 1/16"	49'-5 11/16"	210'-6"
2	113'-7 7/16"	48'-3/8"	210'-0 1/4"
3	114'-7 1/4"	46'-11 7/16"	210'- 0 1/16"
4	115'-7 1/8"	45'-10 1/2"	209'-11 7/8"
5	116'-6 15/16"	44'-9 9/16"	209'-11 3/4"

Girder	No. of Shear Studs (3 studs/row)
1	1905
2	1905
3	1905
4	1905
5	1905

NOTES:

1. Girder dimmensions are measured horizontally along the centerline of the respective girder without accounting for vertical grade.
2. See "FRAMING PLANS" for locations of intermediate stiffener and connection plates.

TYLIN INTERNATIONAL

STATE OF MAINE
DEPARTMENT OF TRANSPORTATION

BRIDGE PLANS

WIN 16705.00

BRIDGE NO. 2660

PROJ. MANAGER		BY	DATE
DESIGN-DETAILED	DSM	SAM	.
CHECKED-REVIEWED	RMH	RMH	.
DESIGN2-DETAILED2			
DESIGN3-DETAILED3			
REVISIONS 1			
REVISIONS 2			
REVISIONS 3			
REVISIONS 4			
FIELD CHANGES			

SIGNATURE

P.E. NUMBER

DATE

PENOBSCOT RIVER BRIDGE
PENOBSCOT RIVER
HOWLAND-ENFIELD PENOBSCOT COUNTY

GIRDER ELEVATION 1

SHEET NUMBER
88
OF 127

Filename: ...\MSTA\XXX_Girder_Elev 1.dgn Division: Username: Date:12/16/2014

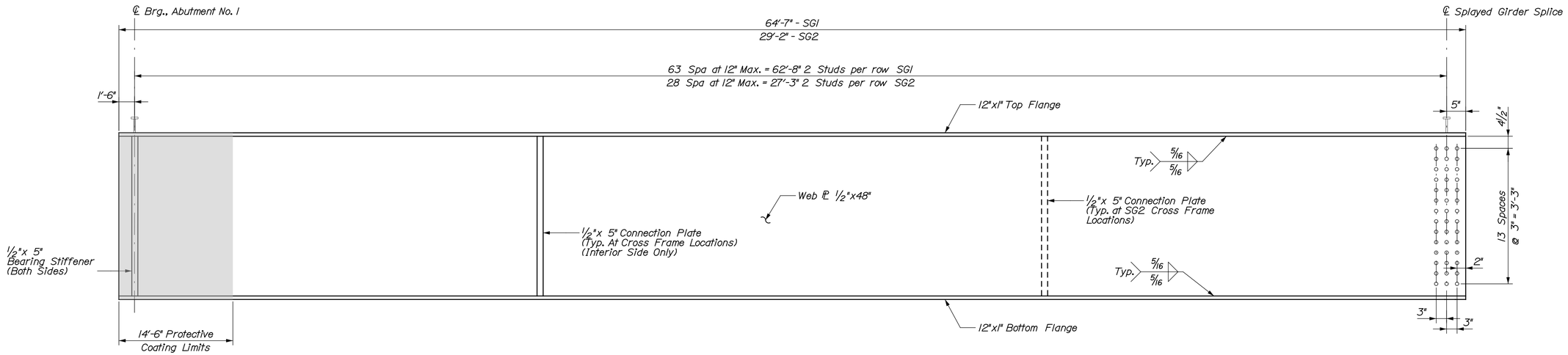

SPLAYED GIRDERS - SG1 AND SG2

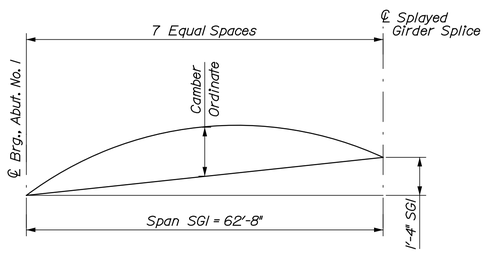

SG1 Camber Diagram

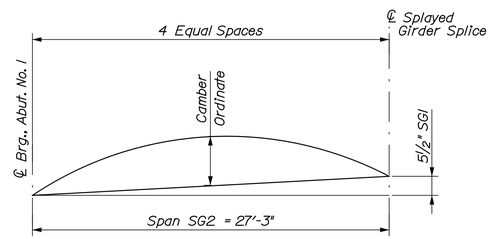

SG2 Camber Diagram

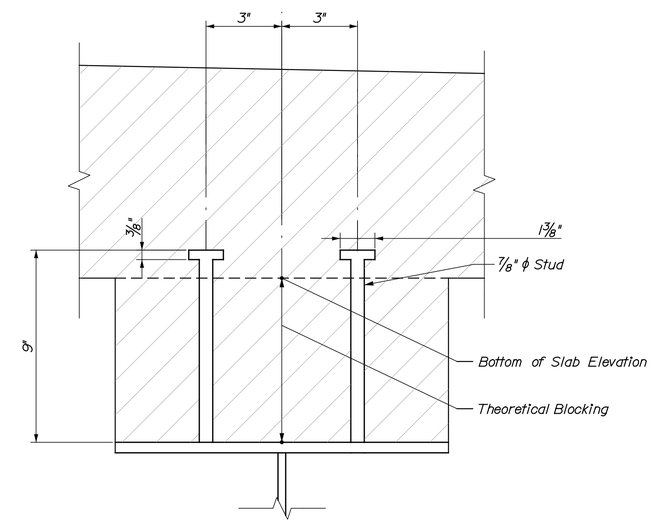

SPLAYED GIRDERS - SHEAR CONNECTOR AND BLOCKING DETAIL

Theoretical blocking is 6 1/2" at ℄ Brg. for SG1 and 7 1/2" at ℄ Brg. for SG2
(Do not use theoretical blocking to set forms)

TABLE OF CAMBER ORDINATES "CO" (Inch)							
Abut. 1	1	2	3	4	5	6	SG Splice
0	3/16	3/8	1/2	1/2	3/8	3/16	0

TABLE OF CAMBER ORDINATES "CO" (Inch)				
Abut. 1	1	2	3	4
0	1/16	1/16	1/16	0

TABLE OF DEFLECTION (Inch)								
Load	Abut. 1	1	2	3	4	5	6	SG Splice
Steel Dead Load	0.00	0.05	0.09	0.11	0.11	0.09	0.05	0.00
Fluid Dead Load	0.00	0.23	0.41	0.51	0.50	0.40	0.22	0.00
Superimposed Dead Load	0.00	0.20	0.35	0.44	0.44	0.36	0.20	0.00

TABLE OF DEFLECTION (Inch)					
Load	Abut. 1	1	2	3	4
Steel Dead Load	0.00	0.00	0.00	0.00	0.00
Fluid Dead Load	0.00	0.01	0.02	0.01	0.00
Superimposed Dead Load	0.00	0.00	0.01	0.00	0.00

BOTTOM OF SLAB ELEVATION (Feet)							
Horizontal Distance Along Centerline of Girder (FT) from ℄ Brg., Abut. 1							
Abut. 1	10	20	30	40	50	60	SG Splice
158.62	158.82	159.02	159.21	159.40	159.57	159.74	159.79

BOTTOM OF SLAB ELEVATION (Feet)			
Horizontal Distance Along Centerline of Girder (FT) from ℄ Brg., Abut. 1			
Abut. 1	10	20	SG Splice
159.83	160.10	160.36	160.55

NOTE:

Top flange is always in compression
Maximum positive moment at mid span.

T·Y·LIN INTERNATIONAL

STATE OF MAINE
DEPARTMENT OF TRANSPORTATION

BRIDGE PLANS

WIN 16705.00

BRIDGE NO. 2660

	N.E.	BY	DATE
PROJ. MANAGER			
DESIGN-DETAILED	DSM	SAM	
CHECKED-REVIEWED	RMH	RMH	
DESIGN2-DETAILED2			
DESIGN3-DETAILED3			
REVISIONS 1			
REVISIONS 2			
REVISIONS 3			
REVISIONS 4			
FIELD CHANGES			

SIGNATURE

P.E. NUMBER

DATE

PENOBSCOT RIVER BRIDGE
PENOBSCOT RIVER
HOWLAND-ENFIELD PENOBSCOT COUNTY

GIRDER ELEVATION 2

SHEET NUMBER

89

OF 127

Filename: ...\MSTA\XXX_Girder_Elev 2.dgn Division: Username: Date:12/16/2014

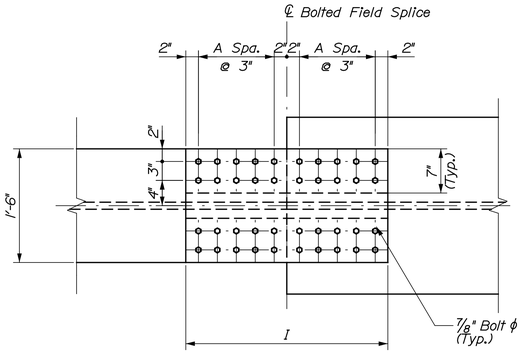

BOLTED FIELD SPLICE TOP VIEW

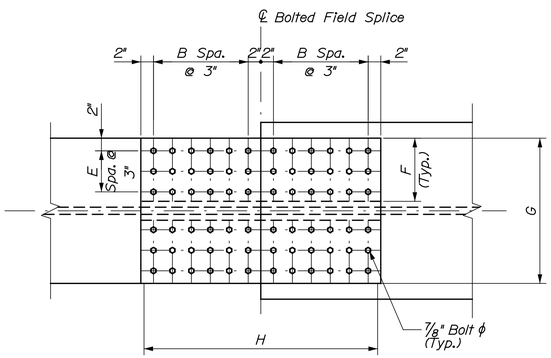

BOLTED FIELD SPLICE BOTTOM VIEW

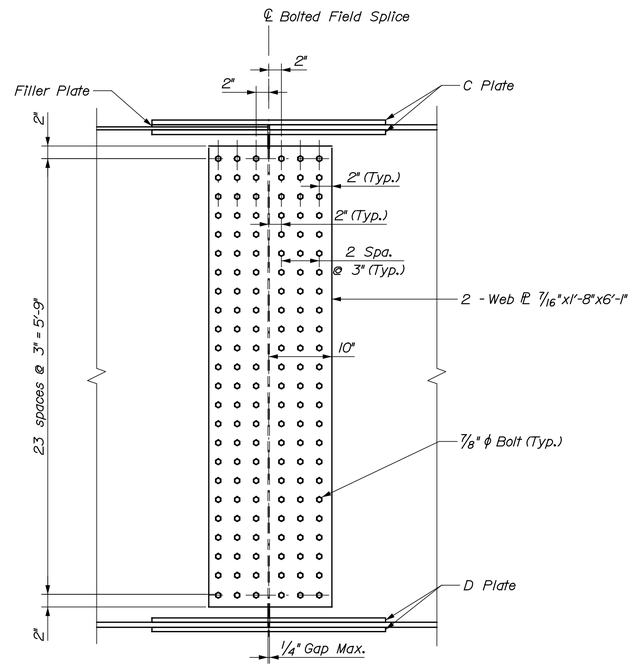

BOLTED FIELD SPLICE ELEVATION

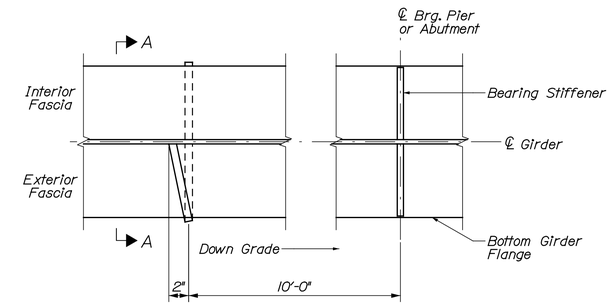

FLANGE DRIP PLATE PLAN

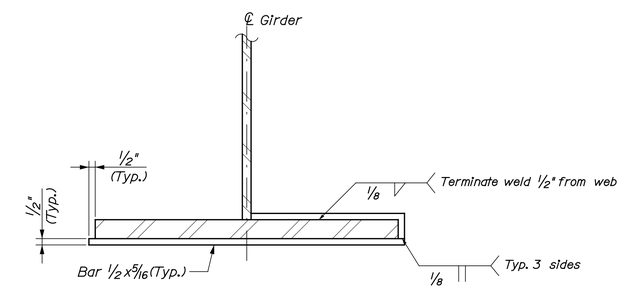

SECTION A-A

GIRDERS 1 to 3									
	A	B	C (in)	D (in)	E	F (in)	G (in)	H	I
Field Splice 1	7	11	3/4"	1 1/8"	1	7	18	6'-2"	4'-2"
Field Splice 2	11	9	1 1/8"	1 1/8"	2	10	24	5'-2"	6'-2"
Field Splice 3	7	7	3/4"	3/4"	1	7	18	4'-2"	4'-2"
Field Splice 4	7	7	3/4"	3/4"	1	7	18	4'-2"	4'-2"
Field Splice 5	7	7	3/4"	3/4"	1	7	18	4'-2"	4'-2"
Field Splice 6	7	7	3/4"	3/4"	1	7	18	4'-2"	4'-2"
Field Splice 7	11	9	1 1/8"	1 1/8"	2	10	24	5'-2"	6'-2"
Field Splice 8	7	11	3/4"	1 1/8"	1	7	18	6'-2"	4'-2"

GIRDERS 4 to 5									
	A	B	C (in)	D (in)	E	F (in)	G (in)	H	I
Field Splice 1	7	11	3/4"	1 1/8"	1	7	18	6'-2"	4'-2"
Field Splice 2	11	9	1 1/8"	1 1/8"	2	10	24	5'-2"	6'-2"
Field Splice 3	7	7	3/4"	3/4"	1	7	18	4'-2"	4'-2"
Field Splice 4	7	7	3/4"	3/4"	1	7	18	4'-2"	4'-2"
Field Splice 5	7	7	3/4"	3/4"	1	7	18	4'-2"	4'-2"
Field Splice 6	7	7	3/4"	3/4"	1	7	18	4'-2"	4'-2"
Field Splice 7	11	9	1 1/8"	1 1/8"	2	10	24	5'-2"	6'-2"
Field Splice 8	7	9	3/4"	1 1/8"	2	10	24	5'-2"	4'-2"

T·Y·LIN INTERNATIONAL

STATE OF MAINE
DEPARTMENT OF TRANSPORTATION

BRIDGE PLANS

WIN 16705.00

BRIDGE NO. 2660

	N.B.	BY	DATE
PROJ. MANAGER			
DESIGN-DETAILED	DSM	SAM	.
CHECKED-REVIEWED	RMH	RMH	
DESIGN2-DETAILED2			
DESIGN3-DETAILED3			
REVISIONS 1			
REVISIONS 2			
REVISIONS 3			
REVISIONS 4			
FIELD CHANGES			

SIGNATURE

P.E. NUMBER

DATE

PENOBSCOT RIVER BRIDGE
PENOBSCOT RIVER
HOWLAND-ENFIELD PENOBSCOT COUNTY

GIRDER DETAILS 1

SHEET NUMBER

90

OF 127

Filename: ...\MSTA\XXX_Girder_Details 1.dgn Division: Username: Date:12/16/2014

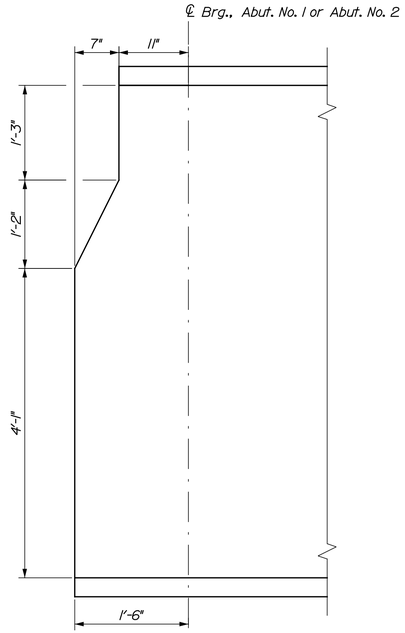

GIRDER END ELEVATION ~ SPAN NO. 1 or 4

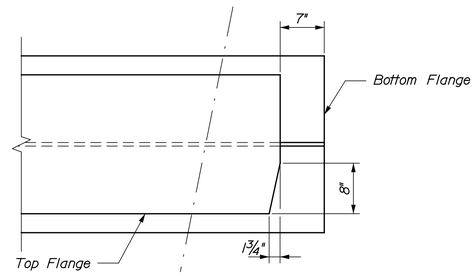

TOP FLANGE CLIP

Abutment No. 2

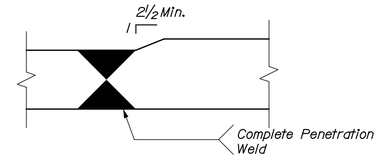

FLANGE BUTT WELD

N.T.S.

FLANGE OR WEB BUTT WELD

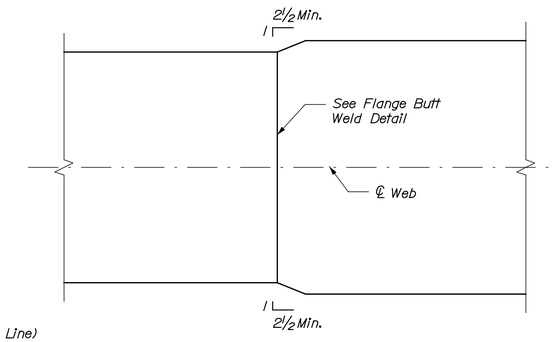

FLANGE WIDTH TRANSITION

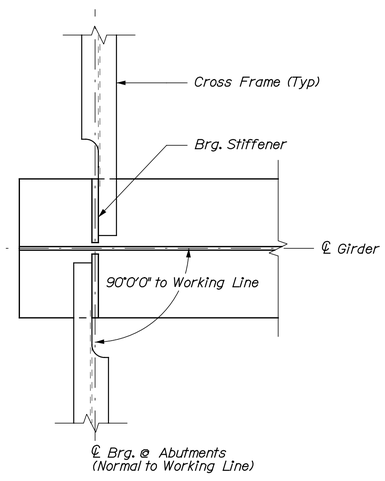

BEARING STIFFENER LAYOUT

-ABUTMENT LOCATIONS-

(Abutment No. 1 shown, Abutment No. 2 Similar)

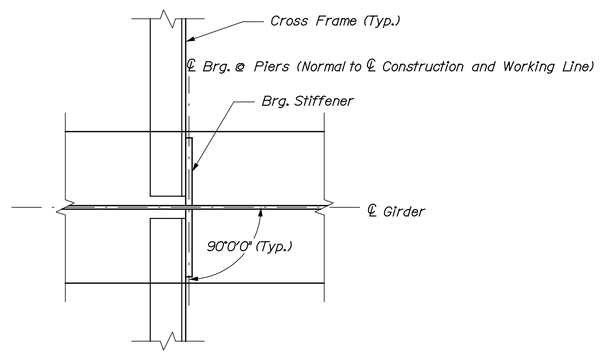

BEARING STIFFENER LAYOUT

-PIER LOCATIONS-

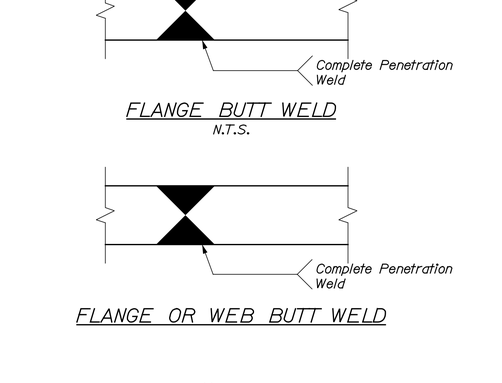

WELDED SPLICE TRANSITION

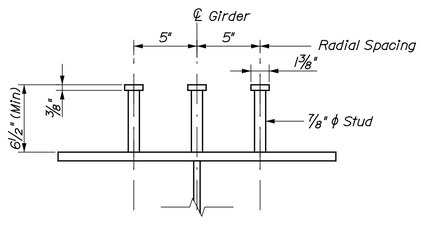

SHEAR CONNECTOR DETAIL

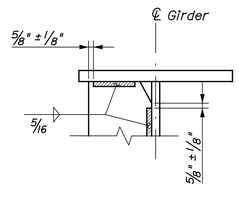

DETAIL A

NOTES:

1. Butt welds at web and flange splices shall be ground flush in longitudinal direction of girder.
2. Transverse rows of shear connectors shall be placed radially along curved section of girders.
3. Studs shall project a minimum of 2" above the bottom of the slab.

T·Y·LIN INTERNATIONAL

STATE OF MAINE
DEPARTMENT OF TRANSPORTATION

BRIDGE PLANS

WIN 16705.00

BRIDGE NO. 2660

PROJ. MANAGER	NLB	BY	DATE
DESIGN-DETAILED	DSM	SAM	.
CHECKED-REVIEWED	RMH	RMH	.
DESIGN2-DETAILED2			
DESIGN3-DETAILED3			
REVISIONS 1			
REVISIONS 2			
REVISIONS 3			
REVISIONS 4			
FIELD CHANGES			

SIGNATURE

P.E. NUMBER

DATE

PENOBSCOT RIVER BRIDGE
PENOBSCOT RIVER
HOWLAND-ENFIELD PENOBSCOT COUNTY

GIRDER DETAILS 2

SHEET NUMBER

91

OF 127

Filename: ...\MSTA\XXX_Girder_Details 2.dgn Division: Username: Date:12/16/2014

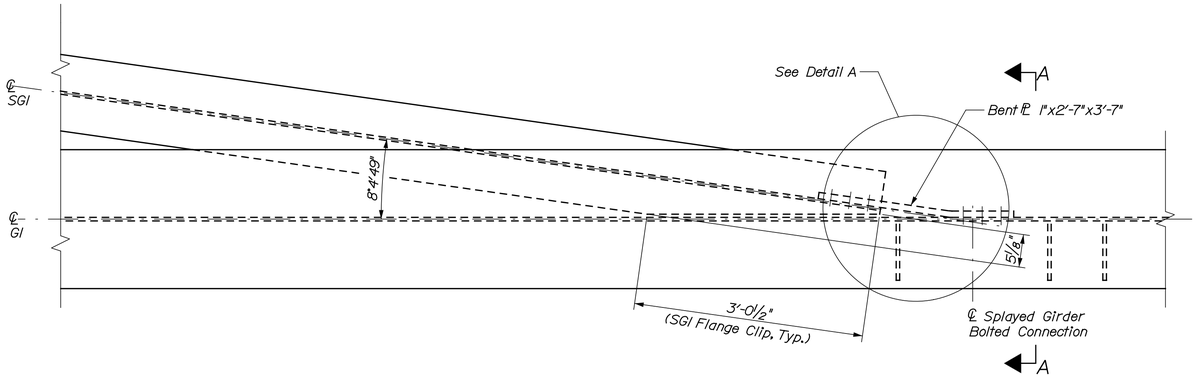

SGI SPLICE CONNECTION

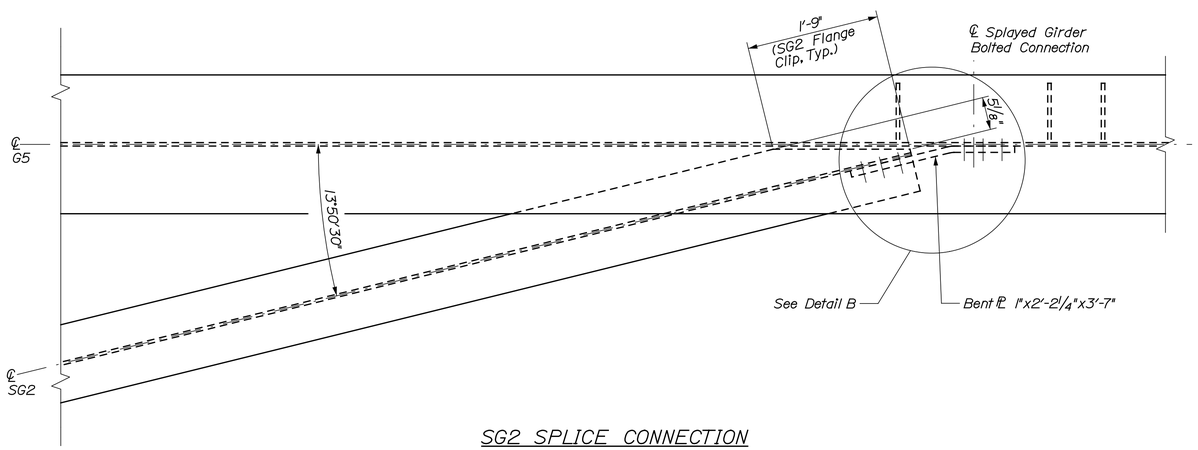

SG2 SPLICE CONNECTION

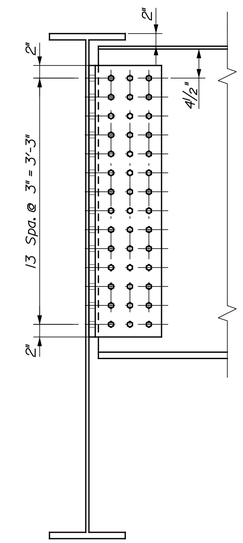

SECTION A-A

SGI Shown SG2 Similar

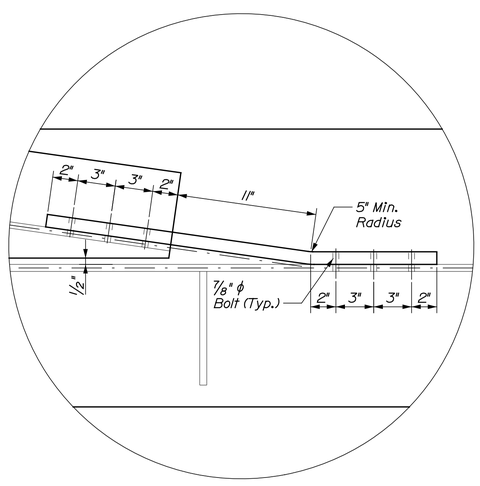

DETAIL A

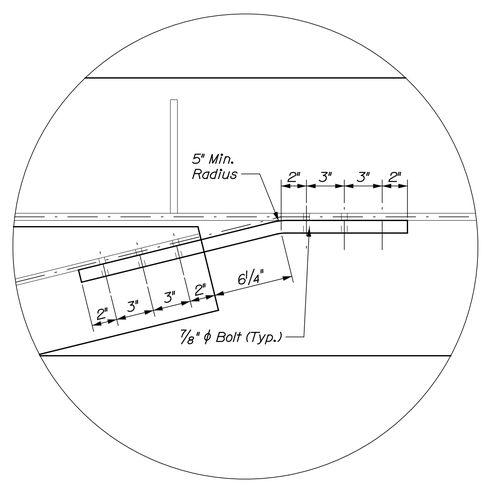

DETAIL B

STATE OF MAINE
DEPARTMENT OF TRANSPORTATION

BRIDGE PLANS

WIN 16705.00

BRIDGE NO. 2660

PROJ. MANAGER		N.B.	BY	DATE
DESIGN-DETAILED	DSM		SAM	.
CHECKED-REVIEWED	RMH		RMH	.
DESIGN2-DETAILED2				
DESIGN3-DETAILED3				
REVISIONS 1				
REVISIONS 2				
REVISIONS 3				
REVISIONS 4				
FIELD CHANGES				

SIGNATURE

P.E. NUMBER

DATE

PENOBSCOT RIVER BRIDGE
PENOBSCOT RIVER
HOWLAND-ENFIELD PENOBSCOT COUNTY

SPLAYED GIRDER DETAILS

TY-LIN INTERNATIONAL

SHEET NUMBER
92
OF 127

Filename: ...\XXX_Aux_Girder_Details 1.dgn Division: Username: Date:12/16/2014

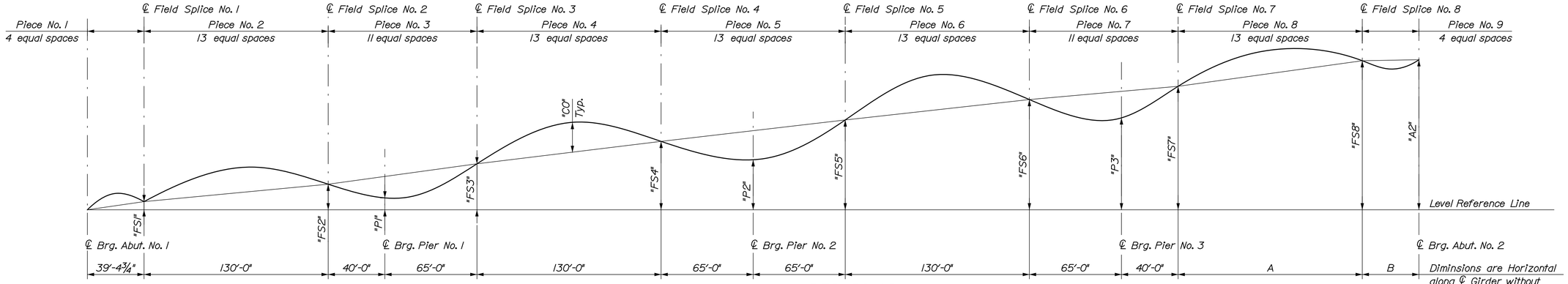

CAMBER DIAGRAM

TABLE OF CAMBER DIMENSIONS (Feet-Inches)

Girder	"FS1"	"FS2"	"P1"	"FS3"	"FS4"	"P2"	"FS5"	"FS6"	"P3"	"FS7"	"FS8"	"A2"	A	B	Girder
G1	0.66	1.65	1.97	2.97	4.32	4.73	5.70	6.97	7.20	7.65	9.21	9.12	127'-3 1/2"	43'-0 5/8"	G1
G2	0.66	1.54	1.82	2.77	4.12	4.52	5.47	6.74	7.04	7.54	9.16	9.03	128'-5 3/8"	41'-6 7/8"	G2
G3	0.65	1.44	1.68	2.56	3.92	4.30	5.23	6.52	6.88	7.42	9.05	8.88	129'-6 11/16"	40'-5 3/8"	G3
G4	0.89	1.58	1.78	2.61	3.97	4.33	5.24	6.53	6.97	7.56	9.19	8.99	130'-7 15/16"	39'-3 15/16"	G4
G5	1.07	1.89	2.07	2.86	4.23	4.58	5.47	6.76	7.25	7.88	9.53	9.29	131'-9 1/4"	38'-2 1/2"	G5

TABLE OF CAMBER ORDINATES "CO" (Inch)

		Piece No. 1					Piece No. 2												Piece No. 3											
Girder	Abut. 1	1	2	3	4	FS1	1	2	3	4	5	6	7	8	9	10	11	FS2	1	2	3	4	5	6	7	8	9	10	FS3	Girder
G1	0	0	1/16	1/8	1/16	0	9/16	1 1/16	1 5/16	1 3/4	2 1/16	2 1/4	2 3/16	1 15/16	1 9/16	1 1/16	1/2	0	-7/8	-1 5/8	-2 1/8	-2 1/2	-2 11/16	-2 11/16	-2 7/16	-2	-1 7/16	-3/4	0	G1
G2	0	0	1/16	1/8	1/16	0	11/16	1 3/16	1 9/16	1 15/16	2 1/4	2 3/8	2 5/16	2 1/16	1 5/8	1 1/8	9/16	0	-7/8	-1 5/8	-2 3/16	-2 9/16	-2 11/16	-2 11/16	-2 1/2	-2 1/16	-1 11/16	-3/4	0	G2
G3	0	0	1/16	1/8	1/16	0	3/4	1 5/16	1 13/16	2 3/16	2 3/8	2 1/2	2 3/8	2 1/8	1 11/16	1 1/8	9/16	0	-7/8	-1 5/8	-2 3/16	-2 9/16	-2 3/4	-2 11/16	-2 1/2	-2 1/16	-1 1/2	-3/4	0	G3
G4	0	11/16	1 5/16	1 5/16	11/16	0	13/16	1 1/2	2 1/16	2 3/8	2 9/16	2 5/8	2 1/2	2 3/16	1 3/4	1 3/16	9/16	0	-7/8	-1 5/8	-2 3/16	-2 9/16	-2 3/4	-2 11/16	-2 1/2	-2 1/16	-1 1/2	-3/4	0	G4
G5	0	3/16	3/8	7/16	5/16	0	17/16	2 9/16	3 7/16	3 7/8	4	3 7/8	3 9/16	3	2 5/16	1 9/16	3/4	0	-7/8	-1 5/8	-2 3/16	-2 9/16	-2 3/4	-2 11/16	-2 1/2	-2 1/16	-1 1/2	-3/4	0	G5

TABLE OF CAMBER ORDINATES "CO" (Inch)

		Piece No. 4													Piece No. 5													
Girder	FS3	1	2	3	4	5	6	7	8	9	10	11	12	FS4	1	2	3	4	5	6	7	8	9	10	11	12	FS5	Girder
G1	0	11/16	1 3/8	2	2 1/2	2 7/8	3 1/16	3 1/8	2 15/16	2 5/8	2 1/8	1 1/2	1 3/16	0	-1 3/16	-1 9/16	-2 1/4	-2 13/16	-3 1/8	-3 5/16	-3 5/16	-3 1/8	-2 3/4	-2 1/4	-1 9/16	-1 3/16	0	G1
G2	0	3/4	1 3/8	2 1/16	2 9/16	2 15/16	3 1/8	3 3/16	3 1/16	2 3/4	2 3/16	1 9/16	1 3/16	0	-1 3/16	-1 9/16	-2 1/4	-2 13/16	-3 1/8	-3 5/16	-3 5/16	-3 1/8	-2 3/4	-2 1/4	-1 9/16	-1 3/16	0	G2
G3	0	3/4	1 7/16	2 1/16	2 5/8	3	3 3/16	3 1/4	3 1/8	2 13/16	2 1/4	1 5/8	7/8	0	-1 3/16	-1 9/16	-2 1/4	-2 3/4	-3 1/8	-3 5/16	-3 5/16	-3 1/8	-2 3/4	-2 1/4	-1 9/16	-1 3/16	0	G3
G4	0	3/4	1 7/16	2 1/8	2 5/8	3 1/16	3 1/4	3 5/16	3 3/16	2 13/16	2 5/16	1 5/8	7/8	0	-1 3/16	-1 9/16	-2 3/16	-2 3/4	-3 1/16	-3 1/4	-3 1/4	-3 1/16	-2 3/4	-2 3/16	-1 9/16	-1 3/16	0	G4
G5	0	3/4	1 1/2	2 1/8	2 11/16	3 1/16	3 5/16	3 3/8	3 3/16	2 7/8	2 3/8	1 11/16	7/8	0	-1 3/16	-1 1/2	-2 3/16	-2 11/16	-3	-3 3/16	-3 3/16	-3	-2 11/16	-2 3/16	-1 1/2	-1 3/16	0	G5

TABLE OF CAMBER ORDINATES "CO" (Inch)

		Piece No. 6													Piece No. 7													
Girder	FS5	1	2	3	4	5	6	7	8	9	10	11	12	FS6	1	2	3	4	5	6	7	8	9	10	11	12	FS7	Girder
G1	0	7/8	1 3/4	2 1/2	3 3/16	3 5/8	3 7/8	3 15/16	3 15/16	3 1/2	2 13/16	2	1 1/16	0	-5/8	-1 1/4	-1 3/4	-2 1/8	-2 5/16	-2 3/8	-2 1/4	-1 15/16	-1 7/16	-1 3/16	0	G1
G2	0	7/8	1 11/16	2 3/8	3	3 7/16	3 11/16	3 11/16	3 9/16	3 3/16	2 5/8	1 13/16	15/16	0	-1 1/16	-1 1/4	-1 13/16	-2 3/16	-2 3/8	-2 7/16	-2 1/4	-1 15/16	-1 1/2	-1 3/16	0	G2
G3	0	13/16	1 9/16	2 1/4	2 13/16	3 1/4	3 7/16	3 7/16	3 1/4	2 15/16	2 3/8	1 11/16	7/8	0	-1 1/16	-1 5/16	-1 13/16	-2 1/4	-2 7/16	-2 7/16	-2 5/16	-2	-1 1/2	-1 3/16	0	G3
G4	0	3/4	1 1/2	2 1/8	2 11/16	3	3 3/16	3 3/16	3	2 5/8	2 1/8	1 1/2	3/4	0	-1 1/16	-1 3/8	-1 7/8	-2 5/16	-2 1/2	-2 1/2	-2 3/8	-2	-1 1/2	-1 3/16	0	G4
G5	0	3/4	1 7/16	2 1/16	2 1/2	2 7/8	3	3	2 3/4	2 3/8	1 15/16	1 3/8	1 1/16	0	-3/4	-1 3/8	-1 15/16	-2 5/16	-2 9/16	-2 9/16	-2 3/8	-2 1/16	-1 9/16	-1 3/16	0	G5

TABLE OF CAMBER ORDINATES "CO" (Inch)

		Piece No. 8													Piece No. 9					
Girder	FS7	1	2	3	4	5	6	7	8	9	10	11	12	FS8	1	2	3	4	Abut. 2	Girder
G1	0	5/16	11/16	1 3/16	1 11/16	2 1/16	2 7/16	2 3/4	2 13/16	2 3/4	2 7/16	1 7/8	1 1/16	0	0	-3/8	-3/4	-7/16	0	G1
G2	0	3/8	13/16	1 3/8	1 7/8	2 3/8	2 3/4	3	3 1/16	2 15/16	2 9/16	1 15/16	1 1/8	0	1/8	0	-1/8	-1/8	0	G2
G3	0	1/2	11/16	1 5/8	2 1/4	2 3/4	3 1/8	3 3/8	3 3/8	3 3/16	2 3/4	2 1/16	1 3/16	0	1/4	1/4	1/4	1/16	0	G3
G4	0	5/8	1 1/4	1 15/16	2 9/16	3 1/8	3 1/2	3 11/16	3 11/16	3 7/16	2 15/16	2 3/16	1 3/16	0	3/8	7/16	1/2	5/16	0	G4
G5	0	11/16	1 7/16	2 3/16	2 15/16	3 1/2	3 7/8	4 1/16	4	3 11/16	3 1/8	2 3/8	1 5/16	0	7/16	9/16	11/16	1/2	0	G5

NOTE:
Positive camber values are upward.

T·Y·LIN INTERNATIONAL

STATE OF MAINE
DEPARTMENT OF TRANSPORTATION

WIN 16705.00
BRIDGE NO. 2660
BRIDGE PLANS

SIGNATURE
P.E. NUMBER
DATE

	N.B	BY	DATE
PROJ. MANAGER			
DESIGN-DETAILED	DSM	SAM	.
CHECKED-REVIEWED	RNH	RNH	.
DESIGN2-DETAILED2			
DESIGN3-DETAILED3			
REVISIONS 1			
REVISIONS 2			
REVISIONS 3			
REVISIONS 4			
FIELD CHANGES			

PENOBSCOT RIVER BRIDGE
PENOBSCOT RIVER
HOWLAND-ENFIELD PENOBSCOT COUNTY

CAMBER DIAGRAM

SHEET NUMBER
93
OF 127

Filename: ...\XXX_Camber_Deflections.dgn Division: Username: Date:12/16/2014

TABLE OF DEFLECTIONS (Inch)

Girder	Load	Abut. 1	Piece No. 1				FS1	Piece No. 2											FS2	Piece No. 3										FS3
			1	2	3	4		1	2	3	4	5	6	7	8	9	10	11		1	2	3	4	5	6	7	8	9	10	
G1	Steel Dead Load	0.00	0.32	0.64	0.94	1.21	1.44	1.64	1.79	1.88	1.91	1.88	1.80	1.67	1.51	1.30	1.08	0.86	0.64	0.44	0.27	0.13	0.03	-0.02	-0.04	-0.01	0.06	0.16	0.28	0.42
	Fluid Dead Load	0.00	0.80	1.61	2.36	3.03	3.60	4.11	4.49	4.72	4.82	4.77	4.59	4.29	3.88	3.38	2.83	2.23	1.64	1.12	0.67	0.33	0.08	-0.06	-0.10	-0.05	0.13	0.39	0.71	1.09
	Superimposed Dead Load	0.00	0.32	0.65	0.95	1.22	1.45	1.66	1.80	1.89	1.93	1.90	1.82	1.68	1.51	1.30	1.06	0.83	0.60	0.39	0.22	0.10	0.02	-0.01	0.02	0.09	0.21	0.37	0.55	0.75
G2	Steel Dead Load	0.00	0.31	0.62	0.91	1.16	1.38	1.57	1.72	1.80	1.83	1.80	1.73	1.60	1.44	1.24	1.03	0.81	0.60	0.41	0.24	0.12	0.03	-0.02	-0.02	0.01	0.09	0.20	0.33	0.48
	Fluid Dead Load	0.00	0.80	1.59	2.34	3.00	3.57	4.09	4.47	4.70	4.80	4.76	4.59	4.29	3.88	3.38	2.82	2.23	1.64	1.11	0.66	0.32	0.08	-0.06	-0.09	-0.02	0.17	0.44	0.78	1.16
	Superimposed Dead Load	0.00	0.32	0.65	0.95	1.22	1.45	1.65	1.80	1.89	1.92	1.89	1.80	1.67	1.49	1.28	1.05	0.81	0.59	0.38	0.21	0.09	0.02	0.00	0.02	0.09	0.22	0.38	0.57	0.77
G3	Steel Dead Load	0.00	0.30	0.59	0.87	1.12	1.33	1.51	1.65	1.73	1.76	1.73	1.65	1.53	1.37	1.18	0.97	0.76	0.56	0.37	0.22	0.10	0.02	-0.01	-0.01	0.04	0.13	0.25	0.39	0.54
	Fluid Dead Load	0.00	0.79	1.58	2.32	2.98	3.55	4.06	4.44	4.67	4.77	4.73	4.56	4.26	3.86	3.36	2.80	2.21	1.62	1.09	0.65	0.31	0.08	-0.05	-0.08	0.00	0.20	0.48	0.83	1.23
	Superimposed Dead Load	0.00	0.32	0.65	0.95	1.22	1.45	1.65	1.80	1.88	1.91	1.88	1.79	1.66	1.48	1.27	1.04	0.80	0.58	0.38	0.21	0.09	0.02	0.00	0.02	0.10	0.23	0.39	0.58	0.78
G4	Steel Dead Load	0.00	0.29	0.57	0.84	1.08	1.28	1.46	1.59	1.66	1.69	1.66	1.58	1.46	1.31	1.12	0.92	0.71	0.52	0.34	0.20	0.09	0.02	-0.01	0.01	0.06	0.16	0.29	0.44	0.60
	Fluid Dead Load	0.00	0.79	1.57	2.31	2.96	3.52	4.03	4.40	4.63	4.73	4.69	4.51	4.21	3.81	3.32	2.76	2.17	1.59	1.07	0.63	0.30	0.07	-0.05	-0.07	0.02	0.22	0.51	0.87	1.27
	Superimposed Dead Load	0.00	0.33	0.65	0.95	1.22	1.45	1.65	1.80	1.88	1.91	1.88	1.79	1.65	1.48	1.26	1.03	0.80	0.57	0.37	0.21	0.09	0.02	0.00	0.03	0.11	0.24	0.41	0.60	0.80
G5	Steel Dead Load	0.00	0.28	0.56	0.82	1.05	1.24	1.41	1.53	1.60	1.62	1.59	1.51	1.39	1.24	1.06	0.86	0.66	0.47	0.31	0.17	0.07	0.01	0.00	0.02	0.08	0.19	0.33	0.49	0.67
	Fluid Dead Load	0.00	0.78	1.56	2.30	2.94	3.49	3.99	4.35	4.58	4.67	4.62	4.45	4.15	3.75	3.26	2.71	2.12	1.55	1.04	0.61	0.29	0.07	-0.04	-0.06	0.03	0.24	0.54	0.90	1.31
	Superimposed Dead Load	0.00	0.32	0.65	0.95	1.22	1.45	1.66	1.80	1.89	1.91	1.88	1.79	1.65	1.47	1.26	1.03	0.79	0.57	0.37	0.20	0.08	0.02	0.00	0.03	0.11	0.25	0.42	0.62	0.83

TABLE OF DEFLECTIONS (Inch)

Girder	Load	FS3	Piece No. 4												FS4	Piece No. 5												FS5
			1	2	3	4	5	6	7	8	9	10	11	12		1	2	3	4	5	6	7	8	9	10	11	12	
G1	Steel Dead Load	0.42	0.56	0.69	0.82	0.92	0.99	1.04	1.04	1.02	0.96	0.87	0.76	0.63	0.49	0.35	0.22	0.12	0.03	-0.01	-0.01	0.02	0.09	0.20	0.35	0.52	0.71	0.91
	Fluid Dead Load	1.09	1.48	1.88	2.25	2.57	2.82	2.99	3.07	3.04	2.92	2.69	2.39	2.02	1.61	1.18	0.80	0.47	0.21	0.06	0.00	0.03	0.14	0.35	0.65	1.03	1.46	1.91
	Superimposed Dead Load	0.75	0.95	1.13	1.30	1.43	1.52	1.58	1.58	1.54	1.45	1.33	1.17	0.99	0.79	0.59	0.41	0.24	0.11	0.04	0.00	0.01	0.08	0.18	0.34	0.53	0.74	0.96
G2	Steel Dead Load	0.48	0.63	0.77	0.91	1.02	1.09	1.14	1.15	1.13	1.07	0.98	0.86	0.72	0.58	0.43	0.29	0.17	0.07	0.02	0.00	0.01	0.07	0.16	0.28	0.44	0.61	0.78
	Fluid Dead Load	1.16	1.57	1.98	2.36	2.69	2.94	3.12	3.19	3.16	3.04	2.80	2.49	2.11	1.68	1.25	0.85	0.51	0.23	0.07	0.00	0.02	0.14	0.34	0.64	1.02	1.44	1.90
	Superimposed Dead Load	0.77	0.97	1.15	1.32	1.46	1.55	1.60	1.61	1.57	1.49	1.36	1.20	1.02	0.82	0.62	0.44	0.27	0.13	0.05	0.00	0.01	0.06	0.16	0.31	0.49	0.68	0.89
G3	Steel Dead Load	0.54	0.70	0.86	0.99	1.11	1.19	1.25	1.26	1.23	1.18	1.08	0.96	0.82	0.66	0.51	0.36	0.22	0.12	0.04	0.01	0.01	0.04	0.11	0.22	0.35	0.50	0.65
	Fluid Dead Load	1.23	1.64	2.06	2.45	2.78	3.04	3.22	3.29	3.26	3.13	2.89	2.57	2.18	1.75	1.30	0.89	0.54	0.26	0.09	0.01	0.02	0.13	0.32	0.62	1.00	1.42	1.87
	Superimposed Dead Load	0.78	0.99	1.18	1.35	1.49	1.58	1.64	1.65	1.61	1.53	1.40	1.24	1.06	0.86	0.66	0.46	0.29	0.15	0.06	0.01	0.01	0.05	0.14	0.27	0.44	0.63	0.83
G4	Steel Dead Load	0.60	0.77	0.93	1.08	1.20	1.29	1.35	1.36	1.34	1.28	1.18	1.06	0.91	0.75	0.58	0.42	0.28	0.15	0.07	0.01	0.00	0.01	0.07	0.15	0.26	0.39	0.53
	Fluid Dead Load	1.27	1.70	2.12	2.51	2.85	3.11	3.28	3.36	3.32	3.19	2.95	2.62	2.23	1.79	1.34	0.92	0.56	0.27	0.10	0.01	0.02	0.12	0.30	0.60	0.96	1.38	1.83
	Superimposed Dead Load	0.80	1.01	1.21	1.38	1.52	1.62	1.68	1.69	1.65	1.57	1.45	1.29	1.10	0.90	0.69	0.49	0.32	0.17	0.07	0.01	0.00	0.04	0.12	0.24	0.40	0.58	0.76
G5	Steel Dead Load	0.67	0.84	1.01	1.16	1.29	1.38	1.44	1.46	1.44	1.38	1.28	1.16	1.00	0.83	0.66	0.49	0.33	0.19	0.09	0.02	-0.01	-0.01	0.02	0.09	0.18	0.28	0.39
	Fluid Dead Load	1.31	1.73	2.16	2.55	2.89	3.15	3.33	3.40	3.36	3.22	2.98	2.65	2.26	1.81	1.36	0.94	0.58	0.29	0.11	0.01	0.01	0.10	0.28	0.57	0.92	1.33	1.77
	Superimposed Dead Load	0.83	1.04	1.24	1.42	1.56	1.67	1.73	1.74	1.70	1.62	1.50	1.33	1.15	0.94	0.73	0.53	0.34	0.19	0.08	0.02	0.00	0.02	0.09	0.21	0.36	0.53	0.70

TABLE OF DEFLECTIONS (Inch)

Girder	Load	FS5	Piece No. 6												FS6	Piece No. 7										FS7
			1	2	3	4	5	6	7	8	9	10	11	12		1	2	3	4	5	6	7	8	9	10	
G1	Steel Dead Load	0.91	1.10	1.29	1.44	1.57	1.66	1.71	1.72	1.68	1.60	1.48	1.32	1.14	0.95	0.76	0.57	0.40	0.24	0.13	0.04	-0.01	-0.02	0.00	0.05	0.14
	Fluid Dead Load	1.91	2.38	2.82	3.22	3.55	3.79	3.93	3.97	3.89	3.71	3.41	3.04	2.59	2.09	1.60	1.15	0.75	0.41	0.18	0.05	0.00	0.04	0.17	0.39	0.70
	Superimposed Dead Load	0.96	1.18	1.39	1.56	1.71	1.80	1.85	1.85	1.80	1.71	1.57	1.39	1.18	0.96	0.75	0.54	0.35	0.20	0.09	0.02	0.00	0.02	0.09	0.21	0.36
G2	Steel Dead Load	0.78	0.96	1.12	1.26	1.37	1.44	1.48	1.48	1.43	1.35	1.23	1.09	0.92	0.74	0.57	0.41	0.26	0.14	0.06	0.01	0.00	0.02	0.08	0.18	0.31
	Fluid Dead Load	1.90	2.36	2.80	3.20	3.53	3.77	3.91	3.95	3.87	3.68	3.39	3.01	2.56	2.06	1.57	1.12	0.72	0.39	0.17	0.04	0.00	0.05	0.19	0.42	0.73
	Superimposed Dead Load	0.89	1.10	1.29	1.46	1.59	1.68	1.73	1.72	1.67	1.57	1.43	1.26	1.07	0.85	0.65	0.46	0.29	0.15	0.05	0.01	0.00	0.05	0.13	0.27	0.44
G3	Steel Dead Load	0.65	0.81	0.95	1.07	1.16	1.22	1.25	1.23	1.18	1.10	0.98	0.84	0.69	0.53	0.38	0.24	0.13	0.04	-0.01	-0.02	0.01	0.07	0.17	0.31	0.48
	Fluid Dead Load	1.87	2.33	2.77	3.17	3.49	3.73	3.87	3.90	3.81	3.63	3.33	2.95	2.50	2.00	1.52	1.08	0.69	0.36	0.15	0.03	0.00	0.06	0.21	0.45	0.78
	Superimposed Dead Load	0.83	1.02	1.20	1.36	1.48	1.56	1.60	1.59	1.54	1.44	1.30	1.13	0.94	0.74	0.55	0.37	0.22	0.09	0.02	-0.01	0.01	0.07	0.18	0.33	0.52
G4	Steel Dead Load	0.53	0.66	0.78	0.88	0.95	1.00	1.01	0.98	0.92	0.84	0.72	0.59	0.45	0.31	0.19	0.08	-0.01	-0.07	-0.08	-0.05	0.02	0.12	0.27	0.46	0.67
	Fluid Dead Load	1.83	2.28	2.71	3.10	3.42	3.65	3.79	3.81	3.72	3.53	3.23	2.85	2.41	1.92	1.45	1.01	0.64	0.33	0.13	0.02	0.00	0.08	0.24	0.50	0.84
	Superimposed Dead Load	0.76	0.95	1.12	1.26	1.38	1.45	1.48	1.47	1.41	1.31	1.17	1.00	0.82	0.63	0.45	0.28	0.15	0.04	-0.02	-0.03	0.01	0.10	0.23	0.41	0.62
G5	Steel Dead Load	0.39	0.50	0.60	0.68	0.74	0.77	0.76	0.73	0.66	0.58	0.46	0.34	0.21	0.09	-0.01	-0.10	-0.15	-0.18	-0.15	-0.09	0.02	0.18	0.37	0.60	0.86
	Fluid Dead Load	1.77	2.21	2.63	3.01	3.33	3.55	3.68	3.70	3.61	3.41	3.11	2.74	2.30	1.82	1.36	0.94	0.58	0.29	0.10	0.01	0.01	0.09	0.27	0.53	0.87
	Superimposed Dead Load	0.70	0.88	1.04	1.17	1.28	1.34	1.37	1.35	1.28	1.18	1.04	0.88	0.70	0.52	0.35	0.20	0.07	-0.02	-0.05	-0.04	0.02	0.12	0.28	0.48	0.71

TABLE OF DEFLECTIONS (Inch)

Girder	Load	FS7	Piece No. 8												FS8	Piece No. 9				
			1	2	3	4	5	6	7	8	9	10	11	12		1	2	3	4	Abut. 2
G1	Steel Dead Load	0.14	0.27	0.43	0.60	0.78	0.95	1.11	1.23	1.33	1.38	1.40	1.37	1.29	1.17	1.00	0.77	0.54	0.27	0.00
	Fluid Dead Load	0.70	1.12	1.60	2.13	2.68	3.19	3.64	4.02	4.28	4.44	4.45	4.34	4.08	3.69	3.15	2.42	1.70	0.85	0.00
	Superimposed Dead Load	0.36	0.55	0.76	0.98	1.19	1.38	1.55	1.68	1.76	1.80	1.79	1.73	1.61	1.45	1.23	0.95	0.66	0.33	0.00
G2	Steel Dead Load	0.31	0.47	0.66	0.87	1.07	1.26	1.42	1.55	1.64	1.69	1.68	1.62	1.51	1.35	1.15	0.88	0.62	0.31	0.00
	Fluid Dead Load	0.73	1.15	1.64	2.17	2.70	3.20	3.64	3.99	4.23	4.36	4.36	4.23	3.95	3.55	3.02	2.33	1.63	0.82	0.00
	Superimposed Dead Load	0.44	0.64	0.87	1.10	1.32	1.53	1.70	1.83	1.92	1.95	1.93	1.85	1.72	1.53	1.30	1.00	0.70	0.35	0.00
G3	Steel Dead Load	0.48	0.69	0.91	1.14	1.36	1.57	1.73	1.86	1.94	1.97	1.94	1.85	1.71	1.52	1.29	0.99	0.69	0.34	0.00
	Fluid Dead Load	0.78	1.20	1.68	2.19	2.70	3.18	3.59	3.91	4.13	4.23	4.21	4.06	3.78	3.38	2.87	2.21	1.55	0.77	0.00
	Superimposed Dead Load	0.52	0.74	0.98	1.23	1.46	1.67	1.84	1.97	2.05	2.07	2.04	1.95	1.80	1.59	1.34	1.03	0.71	0.36	0.00
G4	Steel Dead Load	0.67	0.92	1.18	1.44	1.68	1.89	2.06	2.19	2.26	2.27	2.22	2.11	1.94	1.71	1.44	1.10	0.77	0.38	0.00
	Fluid Dead Load	0.84	1.26	1.73	2.22	2.70	3.14	3.51	3.80	3.99	4.07	4.03	3.88	3.60	3.20	2.72	2.09	1.46	0.73	0.00
	Superimposed Dead Load	0.62	0.86	1.12	1.38	1.61	1.82	2.00	2.12	2.20	2.21	2.16	2.05	1.89	1.66	1.39	1.07	0.74	0.37	0.00
G5	Steel Dead Load	0.86	1.16	1.46	1.75	2.02	2.25	2.43	2.56	2.62	2.62	2.55	2.41	2.21	1.93	1.62	1.24	0.86	0.43	0.00
	Fluid Dead Load	0.87	1.30	1.77	2.24	2.71	3.12	3.47	3.74	3.91	3.97	3.92	3.76	3.47	3.07	2.60	2.00	1.39	0.70	0.00
	Superimposed Dead Load	0.71	0.98	1.27	1.54	1.80	2.02	2.20	2.33	2.40	2.41	2.35	2.22	2.03	1.77	1.49	1.14	0.79	0.39	0.00

NOTES:

1. *See "Camber Diagram" for piece No. locations and span dimensions.*
2. *Steel Dead Load Deflection is due to girders and cross frames.*
3. *Fluid Dead Load Deflection is due to deck concrete, including haunch.*
4. *Superimposed Dead Load is due to curb, sidewalk, and transition barrier concrete, bridge rail, and pavement.*
5. *Positive deflections are downward.*

T·Y·LIN INTERNATIONAL

STATE OF MAINE
DEPARTMENT OF TRANSPORTATION

WIN 16705.00

BRIDGE NO. 2860

BRIDGE PLANS

	NLB	BY	DATE
PROJ. MANAGER			
DESIGN-DETAILED	DSM	SAM	.
CHECKED-REVIEWED	RNH	RNH	.
DESIGN2-DETAILED2			
DESIGN3-DETAILED3			
REVISIONS 1			
REVISIONS 2			
REVISIONS 3			
REVISIONS 4			
FIELD CHANGES			

SIGNATURE

P.E. NUMBER

DATE

PENOBSCOT RIVER BRIDGE
PENOBSCOT RIVER
HOWLAND-ENFIELD PENOBSCOT COUNTY

DEAD LOAD DEFLECTIONS

SHEET NUMBER
94
OF 127

Filename: ...\XXX_Dead_Load_Deflections.dgn Division: Username: Date:12/16/2014

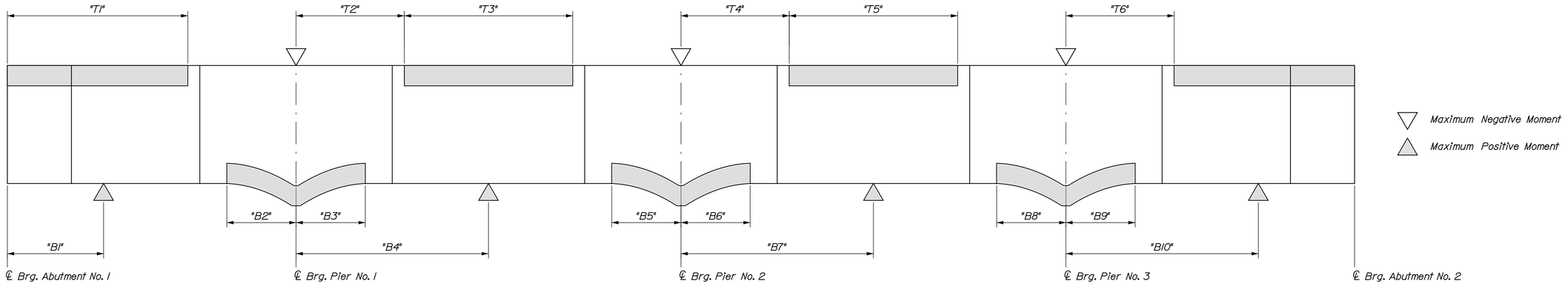

GIRDER STRESS DIAGRAM

Shaded areas are always in compression.
Other areas are in tension or have stress reversal.

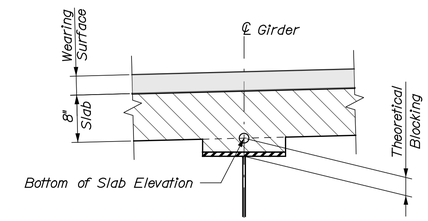

BLOCKING DETAIL

Theoretical blocking is 4 ½" at
℄ Brg., Abutments and Piers (Girders 1 - 4)
Theoretical blocking is 5 ½" at
℄ Brg., Abutments and Piers (Girder 5)
(Do not use theoretical blocking to set forms)

TABLE OF STRESS DIAGRAM DIMENSIONS *

Girder	"T1"	"T2"	"T3"	"T4"	"T5"	"T6"	"B1"	"B2"	"B3"	"B4"	"B5"	"B6"	"B7"	"B8"	"B9"	"B10"
G1	120'-0"	102'-0"	52'-0"	100'-0"	68'-0"	94'-0"	76'-0"	42'-0"	48'-0"	130'-0"	46'-0"	44'-0"	130'-0"	46'-0"	44'-0"	120'-0"
G2	128'-0"	90'-0"	78'-0"	90'-0"	84'-0"	84'-0"	78'-0"	42'-0"	46'-0"	130'-0"	44'-0"	42'-0"	130'-0"	46'-0"	44'-0"	130'-0"
G3	130'-0"	86'-0"	86'-0"	88'-0"	84'-0"	80'-0"	80'-0"	42'-0"	46'-0"	130'-0"	44'-0"	42'-0"	130'-0"	48'-0"	42'-0"	134'-0"
G4	124'-0"	90'-0"	78'-0"	96'-0"	64'-0"	80'-0"	82'-0"	42'-0"	46'-0"	130'-0"	42'-0"	42'-0"	130'-0"	50'-0"	40'-0"	134'-0"
G5	114'-0"	100'-0"	58'-0"	104'-0"	38'-0"	84'-0"	82'-0"	40'-0"	42'-0"	130'-0"	38'-0"	38'-0"	130'-0"	48'-0"	38'-0"	134'-0"

* Measured Horizontally Along Girder, without accounting for vertical profile.

BOTTOM OF SLAB ELEVATIONS

Span No. 1

Horizontal Distance Along Centerline of Girder (FT) from ℄ Brg., Abut. 1

Girder	EL. @ ℄ Brg., @ Abut 1	10	20	30	40	50	60	70	80	90	100	110	120	130	140	150	160	170	180	190	200
G1	159.07	159.18	159.31	159.44	159.56	159.68	159.79	159.89	159.99	160.11	160.22	160.31	160.39	160.46	160.52	160.58	160.64	160.69	160.76	160.84	160.94
G2	159.50	159.61	159.74	159.86	159.98	160.10	160.21	160.31	160.41	160.51	160.61	160.69	160.77	160.82	160.88	160.92	160.97	161.02	161.08	161.15	161.23
G3	159.92	160.04	160.17	160.29	160.41	160.53	160.63	160.73	160.83	160.92	161.00	161.08	161.14	161.19	161.23	161.26	161.30	161.34	161.39	161.45	161.52
G4	160.11	160.34	160.57	160.72	160.84	160.95	161.06	161.16	161.24	161.32	161.39	161.46	161.51	161.55	161.58	161.60	161.63	161.66	161.70	161.75	161.81
G5	159.95	160.19	160.42	160.63	160.83	161.01	161.18	161.32	161.44	161.53	161.60	161.66	161.70	161.73	161.76	161.78	161.80	161.82	161.85	161.90	161.95

Span No. 2

Horizontal Distance Along Centerline of Girder (FT) from ℄ Brg., Pier 1

Girder	EL. @ ℄ Brg., Pier 1	10	20	30	40	50	60	70	80	90	100	110	120	130	140	150	160	170	180	190	200	210	220	230	240	250
G1	161.03	161.15	161.28	161.42	161.58	161.74	161.91	162.08	162.22	162.37	162.51	162.65	162.77	162.88	162.98	163.07	163.15	163.21	163.27	163.32	163.37	163.42	163.48	163.54	163.61	163.70
G2	161.32	161.42	161.54	161.68	161.82	161.98	162.14	162.30	162.45	162.60	162.74	162.87	163.00	163.11	163.21	163.30	163.38	163.44	163.50	163.55	163.59	163.64	163.70	163.76	163.83	163.92
G3	161.60	161.70	161.81	161.93	162.07	162.22	162.37	162.52	162.67	162.82	162.96	163.10	163.22	163.34	163.44	163.53	163.60	163.67	163.72	163.77	163.82	163.86	163.92	163.98	164.05	164.13
G4	161.88	161.97	162.07	162.19	162.31	162.45	162.59	162.74	162.89	163.04	163.19	163.32	163.45	163.56	163.66	163.75	163.82	163.89	163.94	163.99	164.04	164.08	164.14	164.20	164.27	164.35
G5	162.02	162.10	162.20	162.30	162.43	162.56	162.69	162.84	162.99	163.14	163.28	163.42	163.55	163.66	163.76	163.85	163.92	163.99	164.04	164.09	164.13	164.18	164.23	164.29	164.36	164.44

Span No. 3

Horizontal Distance Along Centerline of Girder (FT) from ℄ Brg., Pier 2

Girder	EL. @ ℄ Brg., Pier 2	10	20	30	40	50	60	70	80	90	100	110	120	130	140	150	160	170	180	190	200	210	220	230	240	250
G1	163.80	163.91	164.03	164.16	164.30	164.45	164.61	164.77	164.91	165.07	165.22	165.35	165.47	165.58	165.68	165.76	165.83	165.87	165.91	165.94	165.97	165.99	166.03	166.07	166.12	166.19
G2	164.01	164.12	164.24	164.37	164.51	164.66	164.82	164.97	165.12	165.28	165.42	165.55	165.68	165.79	165.88	165.96	166.03	166.08	166.13	166.16	166.19	166.23	166.27	166.32	166.38	166.45
G3	164.23	164.33	164.45	164.58	164.72	164.87	165.02	165.18	165.32	165.48	165.62	165.76	165.88	165.99	166.08	166.16	166.23	166.29	166.34	166.38	166.42	166.46	166.51	166.56	166.63	166.71
G4	164.44	164.55	164.66	164.79	164.93	165.08	165.23	165.38	165.52	165.68	165.82	165.96	166.08	166.18	166.28	166.36	166.43	166.49	166.55	166.59	166.64	166.69	166.74	166.81	166.88	166.97
G5	164.53	164.64	164.75	164.88	165.02	165.16	165.31	165.46	165.59	165.76	165.90	166.03	166.15	166.25	166.35	166.43	166.50	166.57	166.62	166.68	166.73	166.78	166.84	166.91	167.00	167.09

Span No. 4

Horizontal Distance Along Centerline of Girder (FT) from ℄ Brg., Pier 3

Girder	EL. @ ℄ Brg., Pier 3	10	20	30	40	50	60	70	80	90	100	110	120	130	140	150	160	170	180	190	200	210	EL. @ ℄ Brg., @ Abut 2
G1	166.27	166.36	166.46	166.58	166.71	166.85	167.00	167.16	167.31	167.46	167.60	167.74	167.86	167.97	168.06	168.12	168.17	168.21	168.22	168.23	168.28	168.36	168.37
G2	166.54	166.64	166.75	166.87	167.01	167.16	167.31	167.47	167.63	167.79	167.93	168.07	168.20	168.31	168.40	168.47	168.53	168.57	168.59	168.60	168.62	168.66	168.66
G3	166.81	166.91	167.03	167.16	167.31	167.46	167.62	167.79	167.95	168.10	168.25	168.39	168.51	168.61	168.70	168.78	168.83	168.87	168.89	168.90	168.90	168.91	168.91
G4	167.07	167.19	167.32	167.46	167.61	167.77	167.93	168.10	168.26	168.42	168.57	168.70	168.82	168.92	169.01	169.08	169.13	169.17	169.19	169.20	169.19	-	169.17
G5	167.20	167.32	167.46	167.60	167.76	167.92	168.09	168.26	168.43	168.59	168.74	168.87	168.98	169.08	169.17	169.24	169.29	169.33	169.35	169.35	169.34	-	169.29

T·Y·LIN INTERNATIONAL

STATE OF MAINE
DEPARTMENT OF TRANSPORTATION

BRIDGE PLANS

WIN 16705.00

BRIDGE NO. 2660

PROJ. MANAGER		N.B.	BY	DATE
DESIGN-DETAILED	DSM	SAM	.
CHECKED-REVIEWED	RMH	RMH	.
DESIGN2-DETAILED2			
DESIGN3-DETAILED3			
REVISIONS 1			
REVISIONS 2			
REVISIONS 3			
REVISIONS 4			
FIELD CHANGES			

SIGNATURE

P.E. NUMBER

DATE

PENOBSCOT RIVER BRIDGE
PENOBSCOT RIVER
HOWLAND-ENFIELD PENOBSCOT COUNTY

GIRDER STRESS DIAGRAM & BOS ELEVATIONS

SHEET NUMBER
95
OF 127

Filename: ...\XXX_Girder_Stress_Diagram.dgn Division: Username: Date:12/16/2014

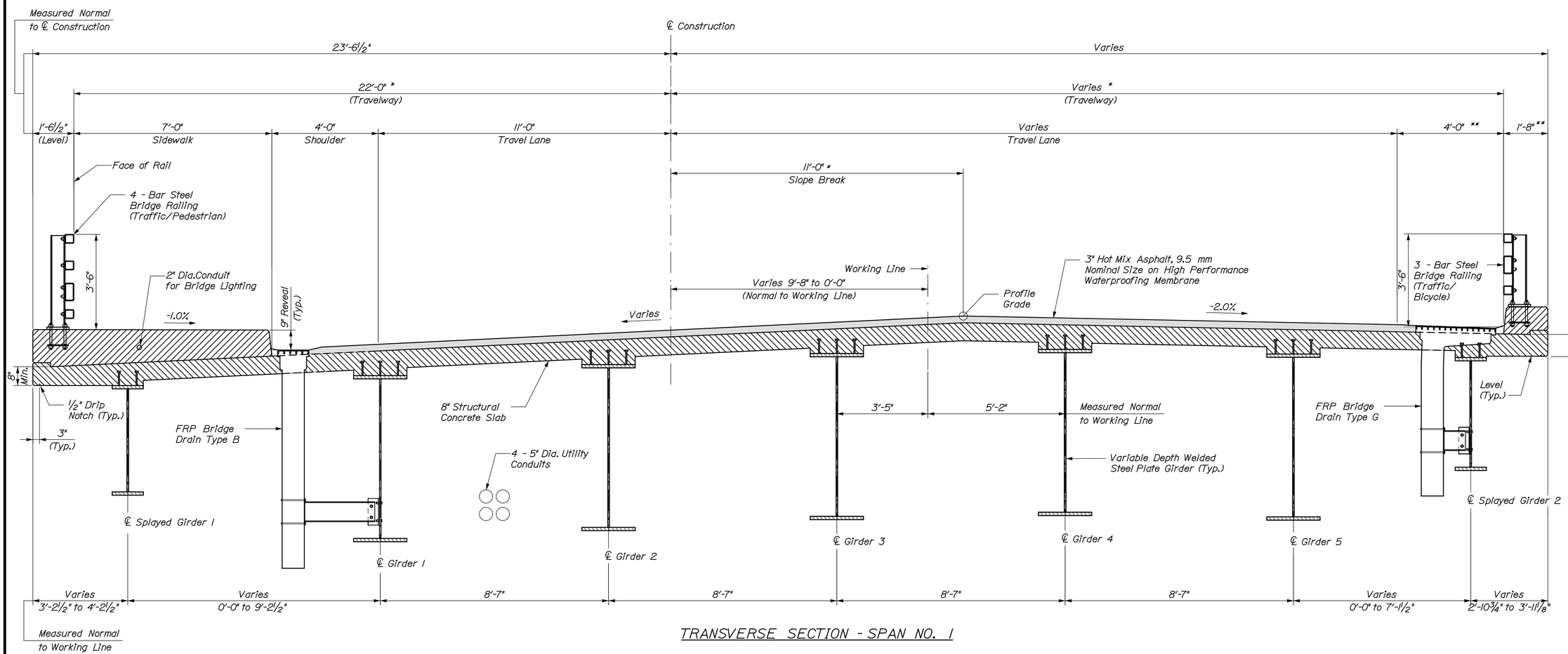

TRANSVERSE SECTION - SPAN NO. 1

* - Measured Normal to ℄ Construction
** - Measured Normal to Fascia

Date:12/16/2014
Username:
Division:
Filename: ...\XXX_Transverse_Section.dgn

STATE OF MAINE
DEPARTMENT OF TRANSPORTATION

WIN 16705.00
BRIDGE NO. 2660
BRIDGE PLANS

	N.B.	BY	DATE
PROJ. MANAGER			
DESIGN-DETAILED	DSM	SAM	.
CHECKED-REVIEWED	RMH	RMH	.
DESIGN2-DETAILED2			
DESIGN3-DETAILED3			
REVISIONS 1			
REVISIONS 2			
REVISIONS 3			
REVISIONS 4			
FIELD CHANGES			

SIGNATURE
P.E. NUMBER
DATE

PENOBSCOT RIVER BRIDGE
PENOBSCOT RIVER
HOWLAND-ENFIELD PENOBSCOT COUNTY

TRANSVERSE SECTION-
SPAN 1

SHEET NUMBER
96
OF 127

T·Y·LIN INTERNATIONAL

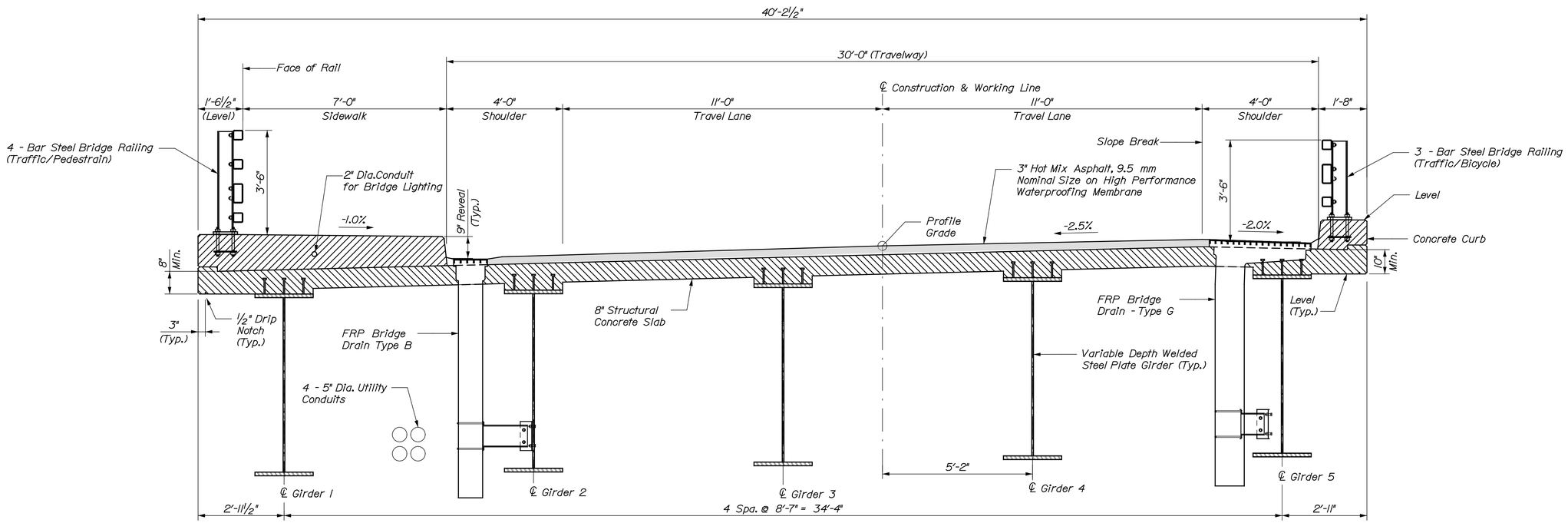

TRANSVERSE SECTION - SPAN NO. 2 & 3

SUPERSTRUCTURE NOTES:

1. Form a 1 inch "V-groove on the fascias at the horizontal joint between the curb and slab.
2. Reinforcing steel shall have a minimum concrete cover of 2 inches unless otherwise noted.
3. Adjust reinforcing steel to fit around the bridge drains as shown and in a manner approved by the Engineer. Do not cut transverse reinforcing bars.
4. Provide one Expansion Device - Finger Joint (Type "C") at each end of the superstructure slab in accordance with the Standard Details and Section 521. Fabricate Expansion Device - Finger Joint at Abutments 1 and 2 normal to ℄ Bearing.
5. Unless the superstructure slab concrete is placed in one continuous operation, the initial placement shall start at a simply supported end of the deck slab and shall terminate at the completion of a positive moment section. Successive placements shall proceed from the end of the previous placement, terminate at the completion of a positive moment section, and include two or more spans. Concrete in a placement shall be kept plastic one complete span behind the span being placed. A minimum of 5 days shall elapse between successive partial placements. The Engineer shall approve the placement sequence of the superstructure slab concrete.
6. Superstructure reinforcing steel as detailed herein is specific to the proposed pouring sequence. At the Contractor's option, an alternate pouring sequence with appropriate reinforcement detailing may be submitted to the Engineer for Approval.
7. Coordinates and/or chord offsets to the fascia will be provided to the Contractor upon written request to the Engineer.
8. Protective Coating for Concrete Surfaces shall be applied to the face and top of concrete curbs, concrete transition barriers, fascias down to the drip notch, and the permanently exposed strips of concrete adjacent to the expansion devices.
9. Structural steel bridge rails shall be installed in accordance with Standard Details 507(01-02), 507(05), and 507(07-14).
10. The Contractor shall install concrete Transition Barrier vertical closed stirrups, as shown on concrete Transition Barrier sheets, prior to the placement of the curb or sidewalk concrete.
11. Install concrete curb in accordance with Standard Detail 502(04).
12. Install concrete sidewalk on bridge in accordance with Standard Detail 502(06).

T·Y·LIN INTERNATIONAL

STATE OF MAINE
DEPARTMENT OF TRANSPORTATION

BRIDGE PLANS

WIN 16705.00

BRIDGE NO. 2660

PROJ. MANAGER		N.B.	BY	DATE
DESIGN-DETAILED	DSM	SAM	.
CHECKED-REVIEWED	RMH	RMH	.
DESIGN2-DETAILED2			
DESIGN3-DETAILED3			
REVISIONS 1			
REVISIONS 2			
REVISIONS 3			
REVISIONS 4			
FIELD CHANGES			

SIGNATURE

P.E. NUMBER

DATE

PENOBSCOT RIVER BRIDGE
PENOBSCOT RIVER
HOWLAND-ENFIELD PENOBSCOT COUNTY

TRANSVERSE SECTION-
SPANS 2 - 3

SHEET NUMBER
97
OF 127

Date:12/16/2014
Username:
Division:
Filename: ...\XXX_Transverse_Section.dgn

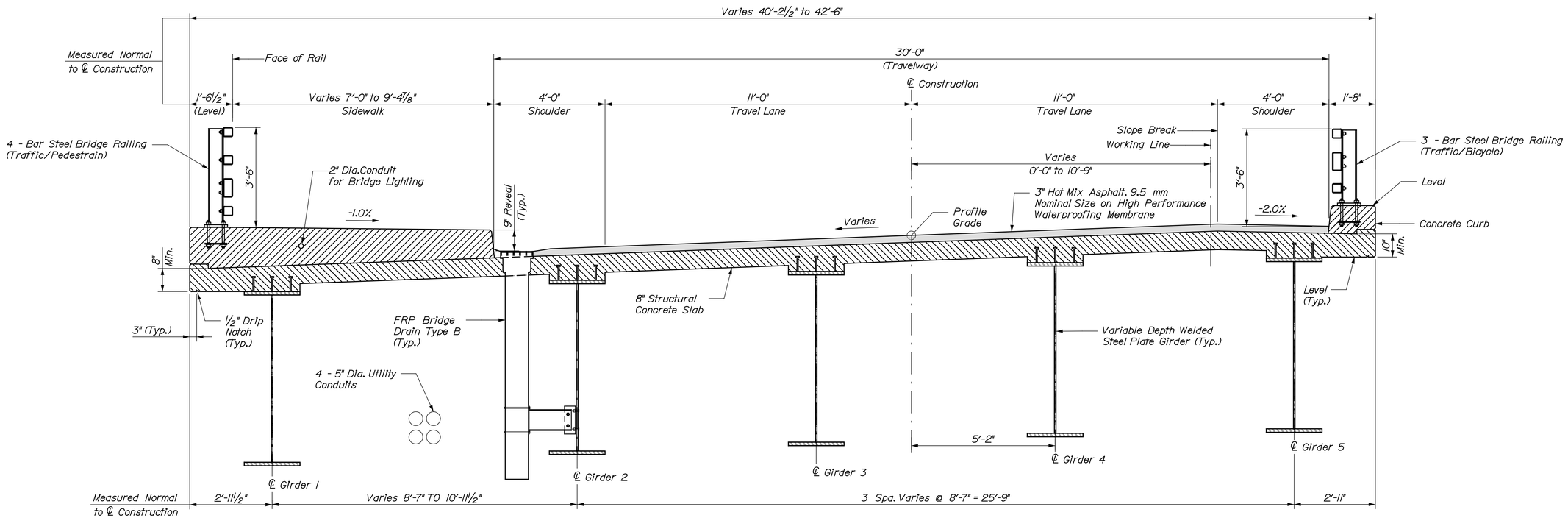

TRANSVERSE SECTION - SPAN NO. 4

STATE OF MAINE
DEPARTMENT OF TRANSPORTATION

BRIDGE NO. 2660 — WIN 16705.00 — BRIDGE PLANS

	N.B.	BY	DATE
PROJ. MANAGER			
DESIGN-DETAILED	DSM	SAM	.
CHECKED-REVIEWED	RMH	RMH	.
DESIGN2-DETAILED2			
DESIGN3-DETAILED3			
REVISIONS 1			
REVISIONS 2			
REVISIONS 3			
REVISIONS 4			
FIELD CHANGES			

SIGNATURE

P.E. NUMBER

DATE

PENOBSCOT RIVER BRIDGE
PENOBSCOT RIVER
HOWLAND-ENFIELD PENOBSCOT COUNTY

TRANSVERSE SECTION-SPAN 4

SHEET NUMBER
98
OF 127

T·Y·LIN INTERNATIONAL

Date:12/16/2014
Username:
Division:
Filename: ...\XXX_Transverse_Section.dgn

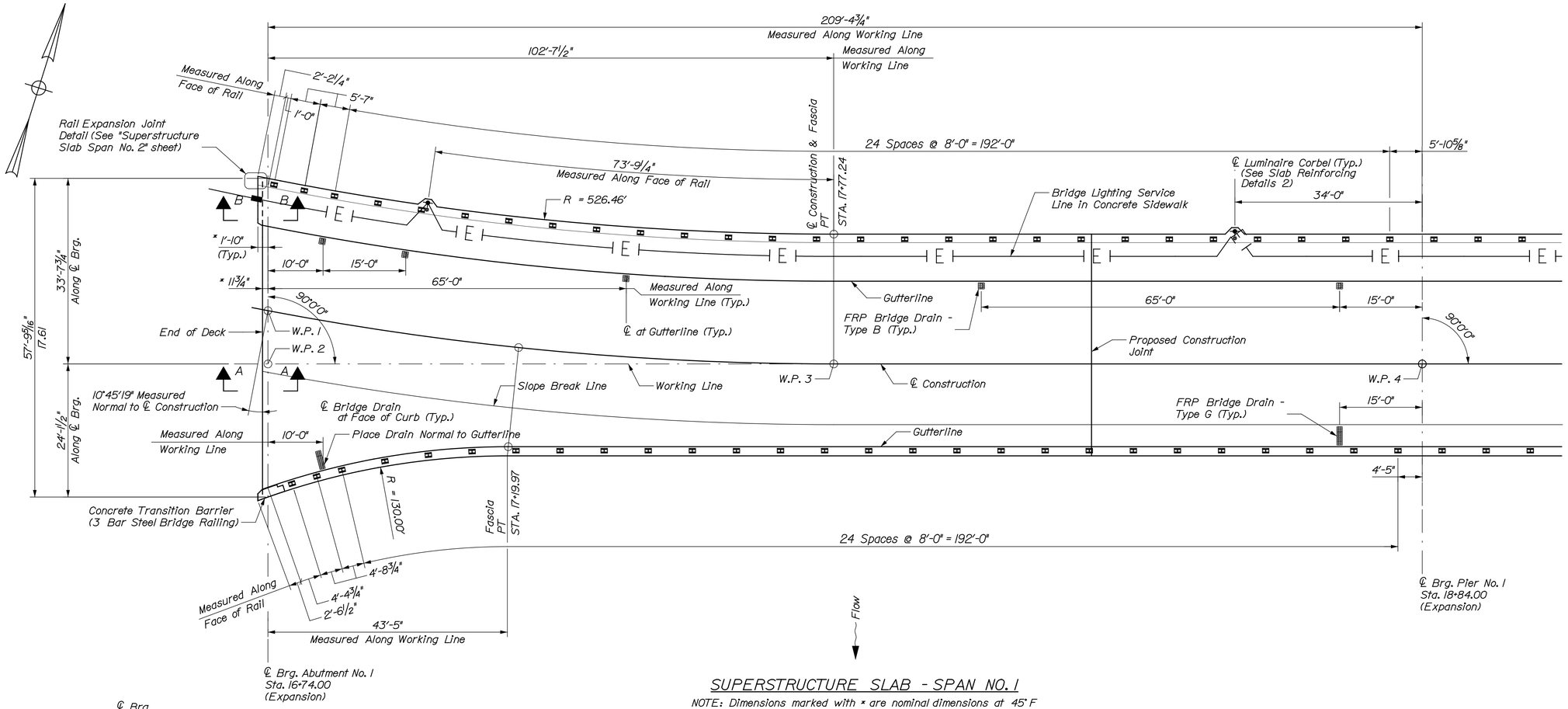

SUPERSTRUCTURE SLAB - SPAN NO. 1

NOTE: Dimensions marked with * are nominal dimensions at 45° F

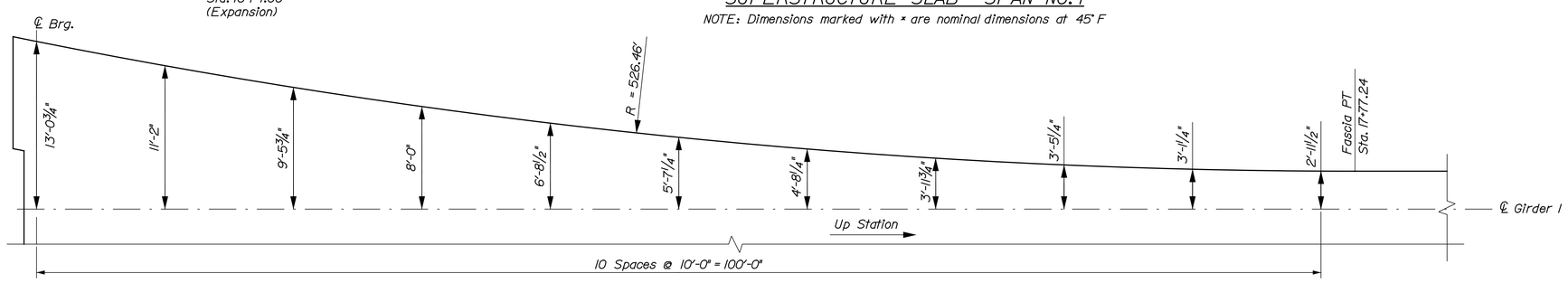

PARTIAL PLAN - LEFT FASCIA OFFSETS

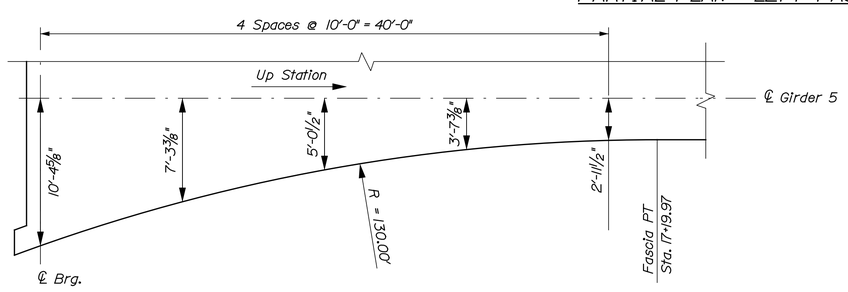

PARTIAL PLAN - RIGHT FASCIA OFFSETS

Note:
For sections A-A and B-B, see "SLAB REINFORCING SECTIONS."

T·Y·LIN INTERNATIONAL

STATE OF MAINE
DEPARTMENT OF TRANSPORTATION

BRIDGE PLANS

WIN 16705.00

BRIDGE NO. 2660

PROJ. MANAGER			
DESIGN-DETAILED	DSM	SAM	
CHECKED-REVIEWED	RMH	RMH	
DESIGN2-DETAILED2			
DESIGN3-DETAILED3			
REVISIONS 1			
REVISIONS 2			
REVISIONS 3			
REVISIONS 4			
FIELD CHANGES			

SIGNATURE

P.E. NUMBER

DATE

PENOBSCOT RIVER BRIDGE
PENOBSCOT RIVER
HOWLAND-ENFIELD PENOBSCOT COUNTY

SUPERSTRUCTURE SLAB
SPAN NO. 1

SHEET NUMBER
99
OF 127

Filename: ...\MSTA\XXX_Super_Slab_Span 1.dgn Division: Username: Date:12/16/2014

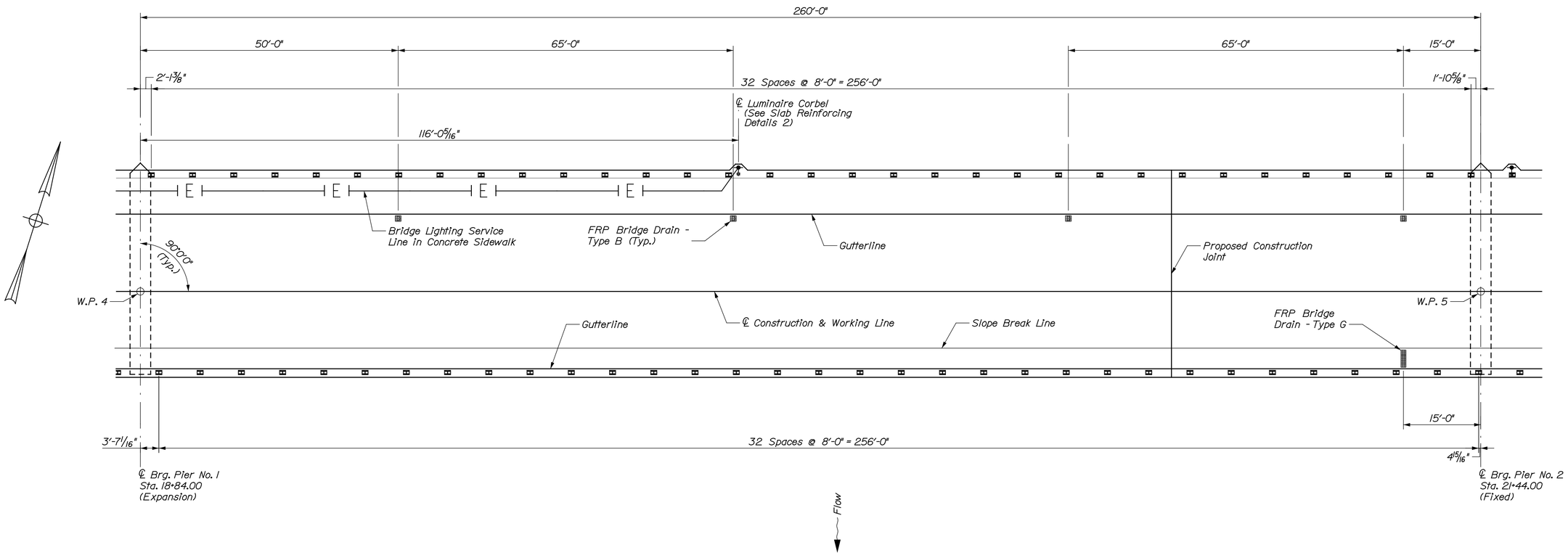

SUPERSTRUCTURE SLAB - SPAN NO. 2

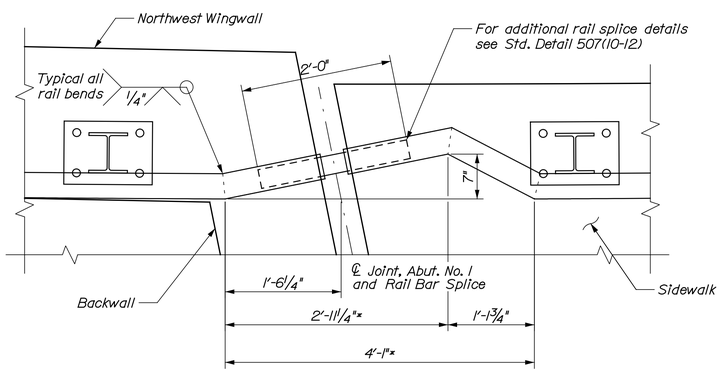

RAIL BAR EXPANSION JOINT DETAIL

* Dimension @ 45° F

STATE OF MAINE
DEPARTMENT OF TRANSPORTATION

WIN 16705.00

BRIDGE NO. 2660

BRIDGE PLANS

	N.B.	BY	DATE
PROJ. MANAGER			
DESIGN-DETAILED	DSM	SAM	.
CHECKED-REVIEWED	RMH	RMH	.
DESIGN2-DETAILED2			
DESIGN3-DETAILED3			
REVISIONS 1			
REVISIONS 2			
REVISIONS 3			
REVISIONS 4			
FIELD CHANGES			

SIGNATURE

P.E. NUMBER

DATE

PENOBSCOT RIVER BRIDGE
PENOBSCOT RIVER
HOWLAND-ENFIELD PENOBSCOT COUNTY

SUPERSTRUCTURE SLAB
SPAN NO. 2

SHEET NUMBER
100
OF 127

T·Y·LIN INTERNATIONAL

Filename: ...\MSTA\XXX_Super_Slab_Span 2.dgn Division: Username: Date:12/16/2014

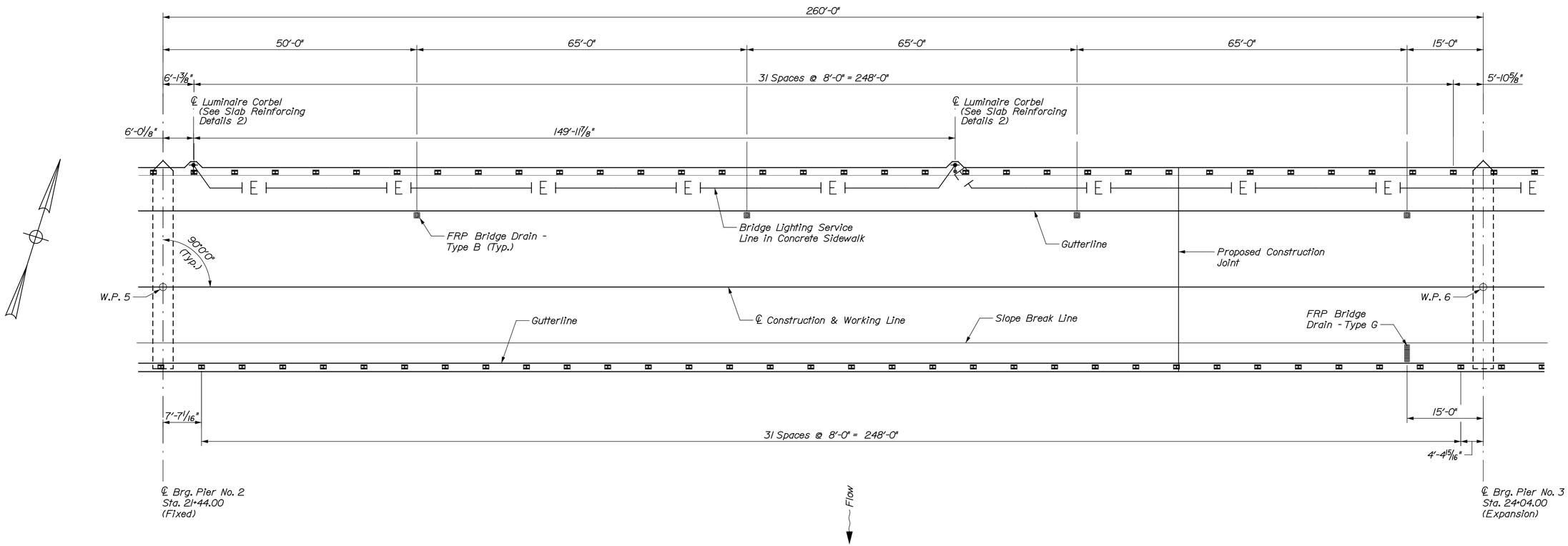

SUPERSTRUCTURE SLAB - SPAN NO. 3

STATE OF MAINE
DEPARTMENT OF TRANSPORTATION

BRIDGE PLANS

WIN 16705.00

BRIDGE NO. 2660

PROJ. MANAGER				
DESIGN-DETAILED	DSM	SAM		
CHECKED-REVIEWED	RMH	RMH		
DESIGN2-DETAILED2				
DESIGN3-DETAILED3				
REVISIONS 1				
REVISIONS 2				
REVISIONS 3				
REVISIONS 4				
FIELD CHANGES				

SIGNATURE

P.E. NUMBER

DATE

PENOBSCOT RIVER BRIDGE
PENOBSCOT RIVER
HOWLAND-ENFIELD PENOBSCOT COUNTY

SUPERSTRUCTURE SLAB
SPAN NO. 3

SHEET NUMBER
101
OF 127

T·Y·LIN INTERNATIONAL

Filename: ...\MSTA\XXX_Super_Slab_Span 3.dgn Division: Username: Date:12/16/2014

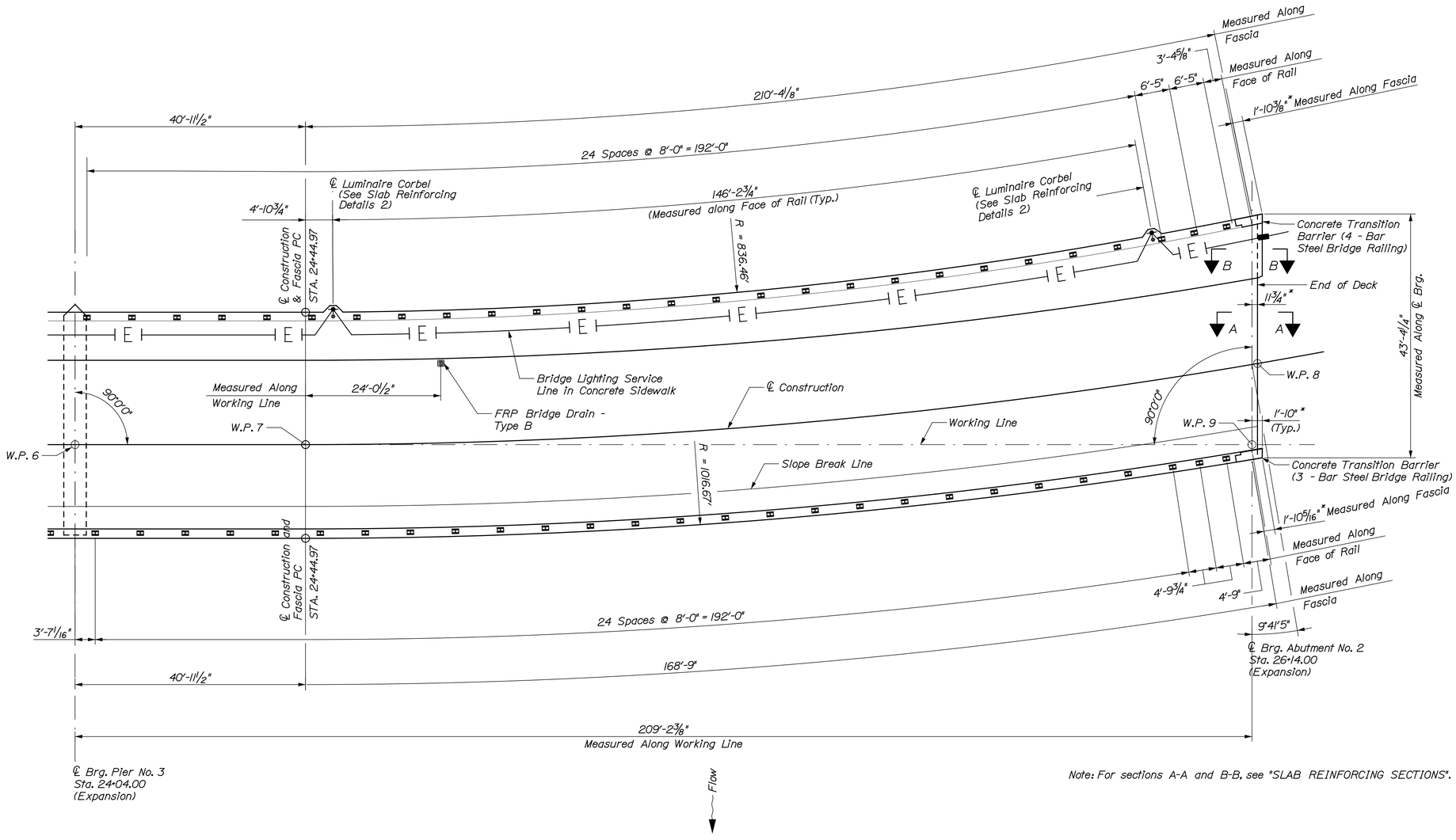

Note: For sections A-A and B-B, see "SLAB REINFORCING SECTIONS".

SUPERSTRUCTURE SLAB - SPAN NO. 4

(Dimensions marked with * are nominal dimensions at 45° F.)

T·Y·LIN INTERNATIONAL

STATE OF MAINE
DEPARTMENT OF TRANSPORTATION

WIN 16705.00

BRIDGE NO. 2660

BRIDGE PLANS

PROJ. MANAGER	N.B.	BY	DATE
DESIGN-DETAILED	DSM	SAM	.
CHECKED-REVIEWED	RMH	RMH	.
DESIGN2-DETAILED2			
DESIGN3-DETAILED3			
REVISIONS 1			
REVISIONS 2			
REVISIONS 3			
REVISIONS 4			
FIELD CHANGES			

SIGNATURE

P.E. NUMBER

DATE

PENOBSCOT RIVER BRIDGE
PENOBSCOT RIVER
HOWLAND-ENFIELD PENOBSCOT COUNTY

SUPERSTRUCTURE SLAB
SPAN NO. 4

SHEET NUMBER
102
OF 127

Filename: ...\MSTA\XXX_Super_Slab_Span 4.dgn Division: Username: Date:12/16/2014

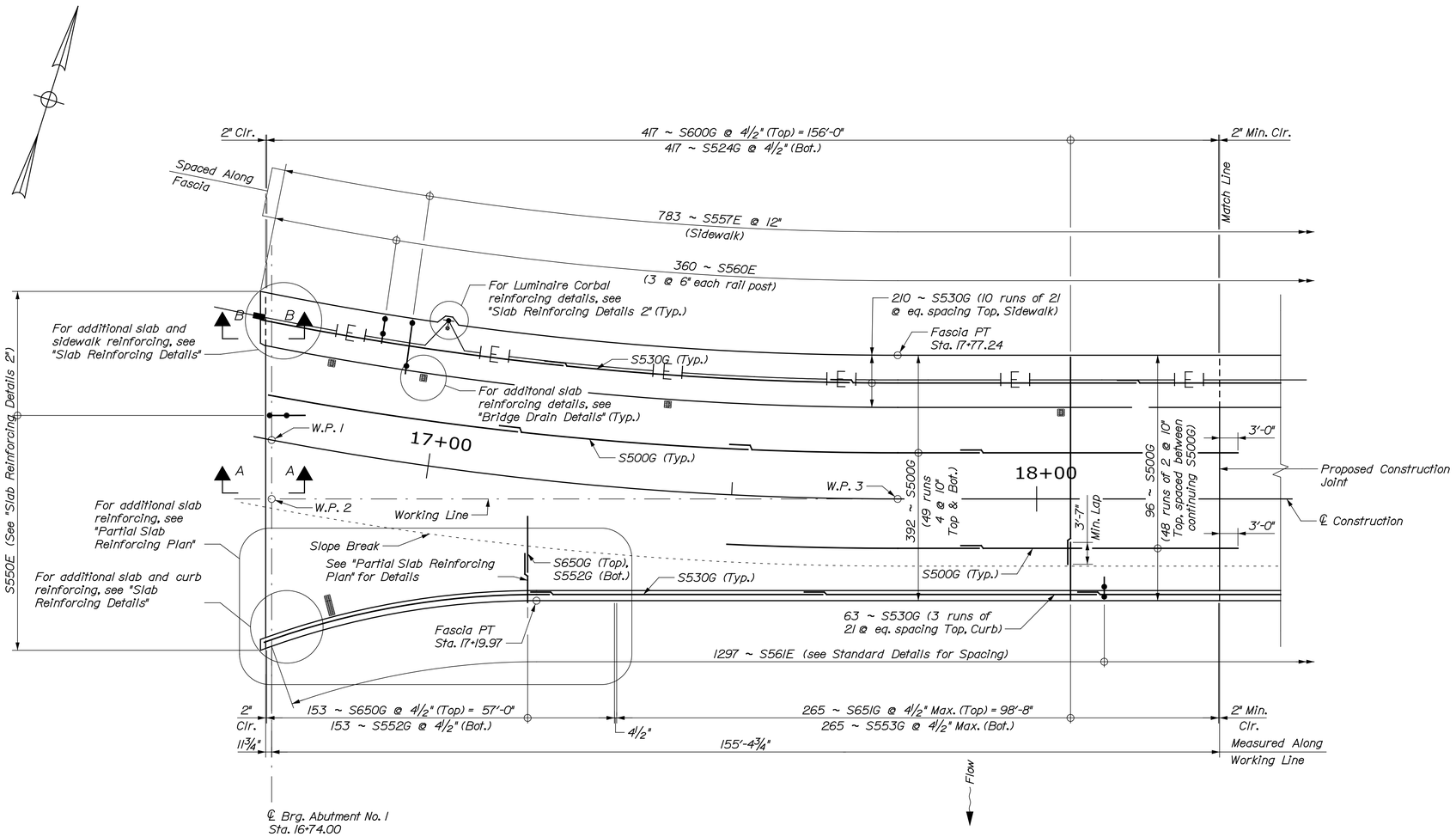

SLAB REINFORCING PLAN 1

NOTE:
See "Slab Reinforcing Sections" for sections A-A and B-B.

Date:12/16/2014 Username: Division: Filename: ...\MSTA\XXX_Slab_Reinf_Span 1.dgn

STATE OF MAINE
DEPARTMENT OF TRANSPORTATION

BRIDGE PLANS

WIN 16705.00

BRIDGE NO. 2660

PROJ. MANAGER	N.L.B.	BY	DATE
DESIGN-DETAILED	DSM	SAM	.
CHECKED-REVIEWED	RMH	RMH	.
DESIGN2-DETAILED2			
DESIGN3-DETAILED3			
REVISIONS: 1			
REVISIONS: 2			
REVISIONS: 3			
REVISIONS: 4			
FIELD CHANGES			

SIGNATURE

P.E. NUMBER

DATE

PENOBSCOT RIVER BRIDGE
PENOBSCOT RIVER
HOWLAND-ENFIELD PENOBSCOT COUNTY

SLAB REINFORCING PLAN - PLAN 1

SHEET NUMBER
103
OF 127

T·Y·LIN INTERNATIONAL

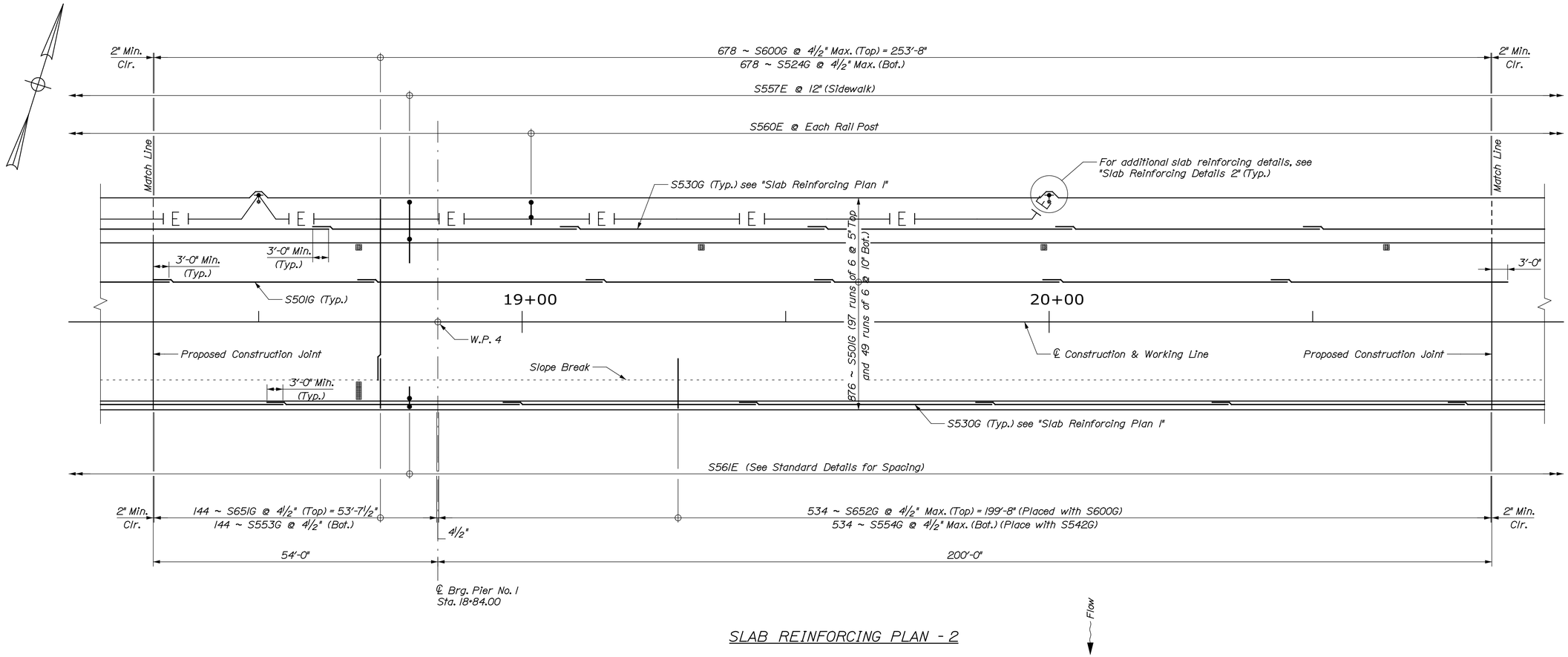

SLAB REINFORCING PLAN - 2

STATE OF MAINE
DEPARTMENT OF TRANSPORTATION

BRIDGE PLANS

WIN 16705.00

BRIDGE NO. 2660

PROJ. MANAGER	N.B.	BY	DATE
DESIGN-DETAILED	DSM	SAM	.
CHECKED-REVIEWED	RMH	RMH	.
DESIGN2-DETAILED2			
DESIGN3-DETAILED3			
REVISIONS 1			
REVISIONS 2			
REVISIONS 3			
REVISIONS 4			
FIELD CHANGES			

SIGNATURE

P.E. NUMBER

DATE

PENOBSCOT RIVER BRIDGE
PENOBSCOT RIVER
HOWLAND-ENFIELD PENOBSCOT COUNTY

SLAB REINFORCING PLAN - PLAN 2

SHEET NUMBER
104
OF 127

T·Y·LIN INTERNATIONAL

Date:12/16/2014 Username: Filename: ...\MSTA\XXX_Slab_Reinf_Span 2.dgn Division:

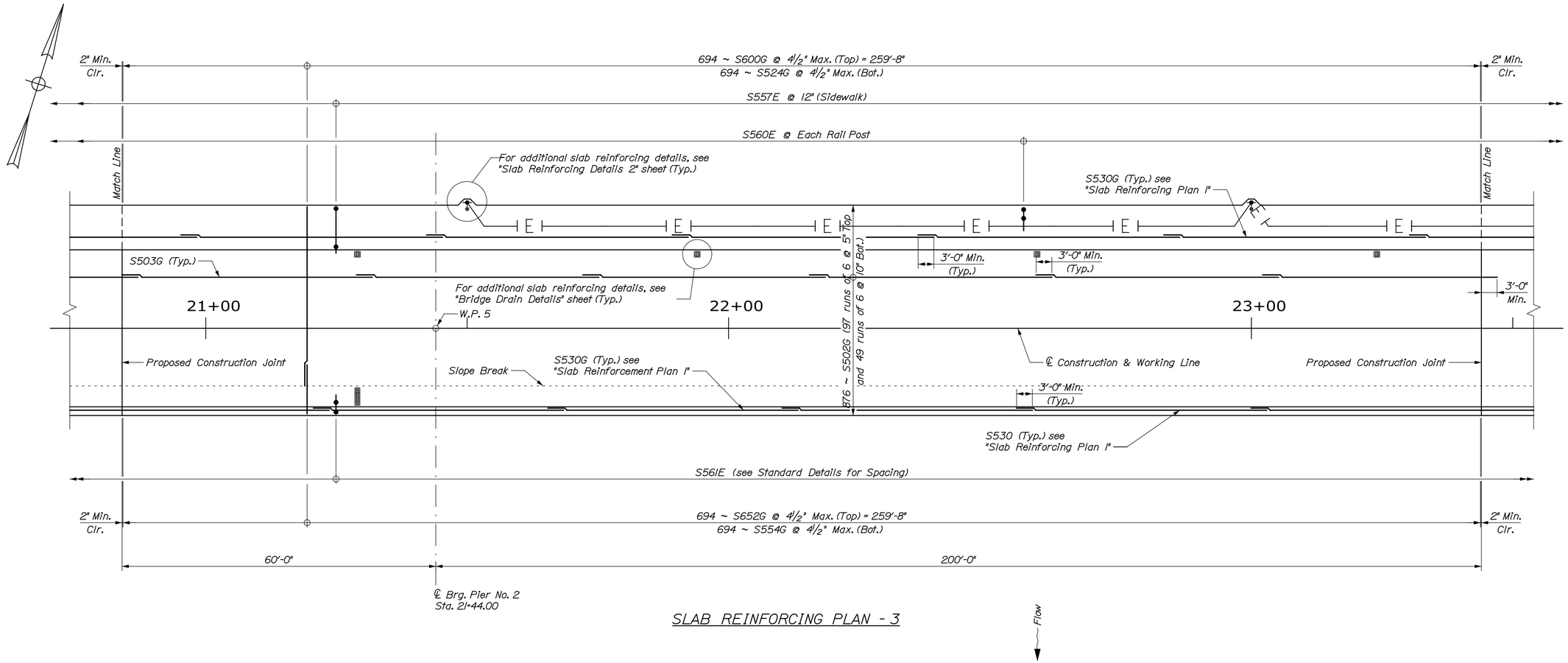

SLAB REINFORCING PLAN - 3

STATE OF MAINE
DEPARTMENT OF TRANSPORTATION

BRIDGE PLANS

WIN 16705.00

BRIDGE NO. 2660

PROJ. MANAGER		N.B.	BY	DATE
DESIGN-DETAILED	DSM	SAM	.
CHECKED-REVIEWED	RMH	RMH	.
DESIGN2-DETAILED2			
DESIGN3-DETAILED3			
REVISIONS 1			
REVISIONS 2			
REVISIONS 3			
REVISIONS 4			
FIELD CHANGES			

SIGNATURE

P.E. NUMBER

DATE

PENOBSCOT RIVER BRIDGE
PENOBSCOT RIVER
HOWLAND-ENFIELD PENOBSCOT COUNTY

SLAB REINFORCING PLAN - PLAN 3

T·Y·LIN INTERNATIONAL

SHEET NUMBER
105
OF 127

Filename: ...\MSTA\XXX_Slab_Reinf_Span 3.dgn Division: Username: Date:12/16/2014

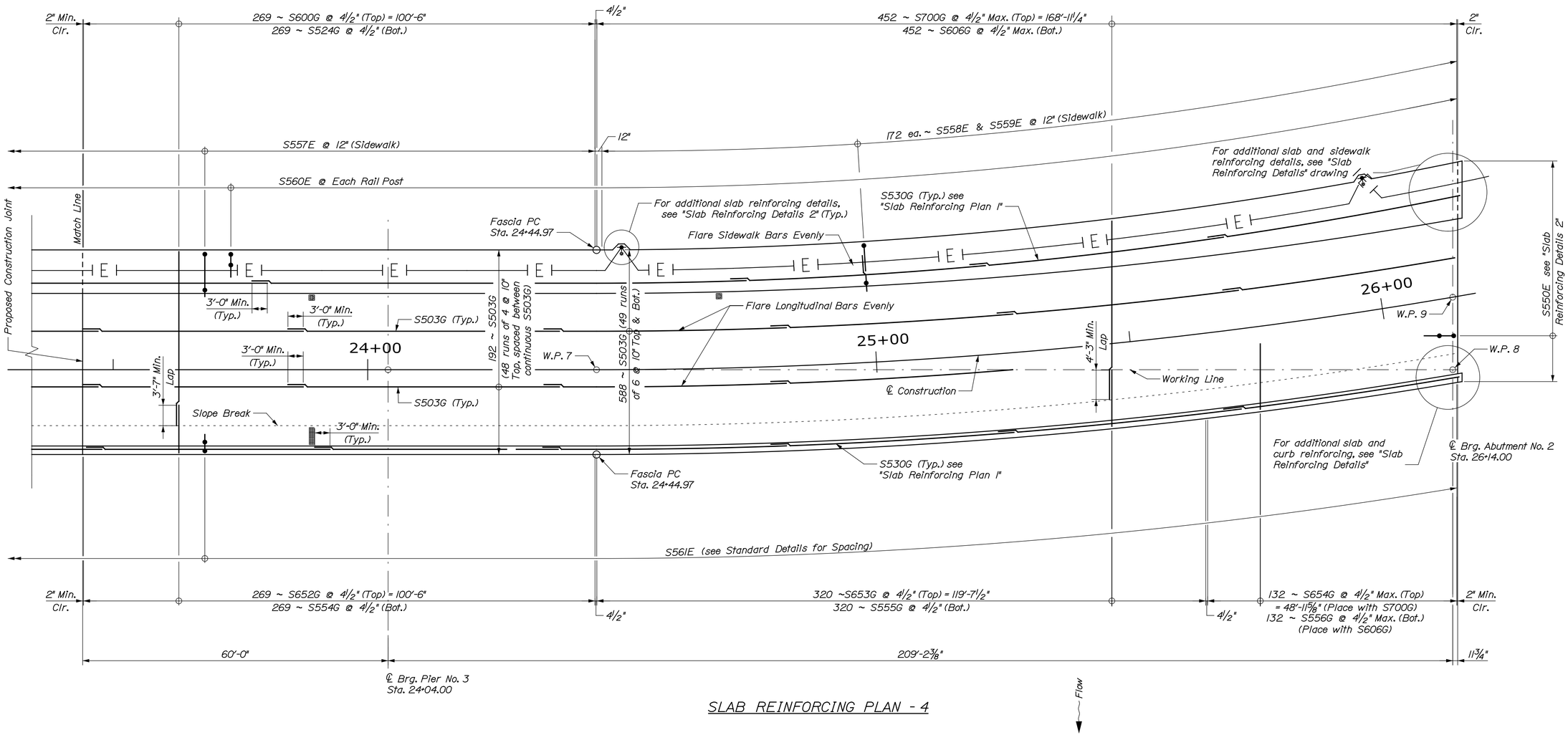

SLAB REINFORCING PLAN - 4

STATE OF MAINE
DEPARTMENT OF TRANSPORTATION

BRIDGE PLANS

WIN 16705.00

BRIDGE NO. 2660

PROJ. MANAGER		N.L.B.	BY	DATE
DESIGN-DETAILED	DSM		SAM	
CHECKED-REVIEWED	RMH		RMH	
DESIGN2-DETAILED2				
DESIGN3-DETAILED3				
REVISIONS 1				
REVISIONS 2				
REVISIONS 3				
REVISIONS 4				
FIELD CHANGES				

SIGNATURE

P.E. NUMBER

DATE

PENOBSCOT RIVER BRIDGE
PENOBSCOT RIVER
HOWLAND-ENFIELD PENOBSCOT COUNTY

SLAB REINFORCING PLAN - PLAN 4

SHEET NUMBER

106

OF 127

T·Y·LIN INTERNATIONAL

Date:12/16/2014 Username: Division: Filename: ...\MSTA\XXX_Slab_Reinf_Span 4.dgn

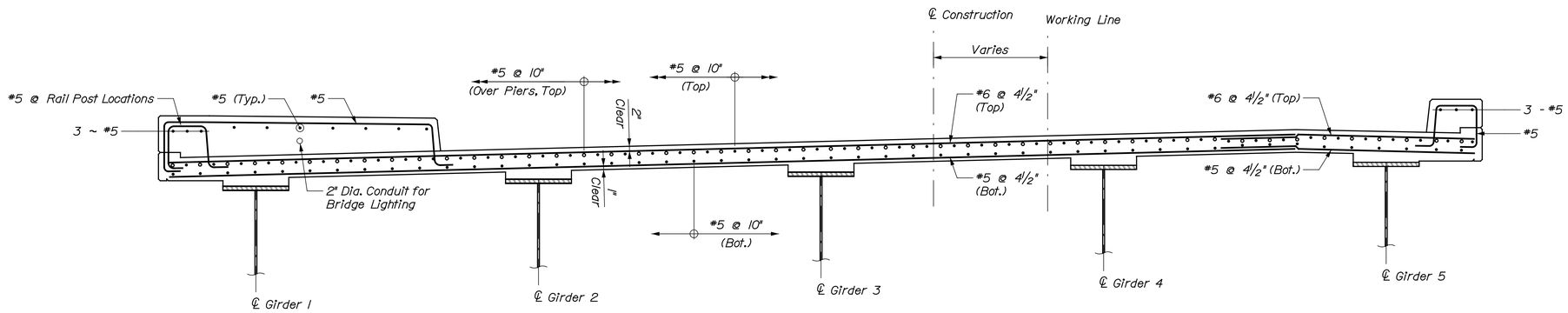

TRANSVERSE REINFORCING SECTION

(Spans 2 - 3 Shown)

(Spans 1 & 4 Similar)

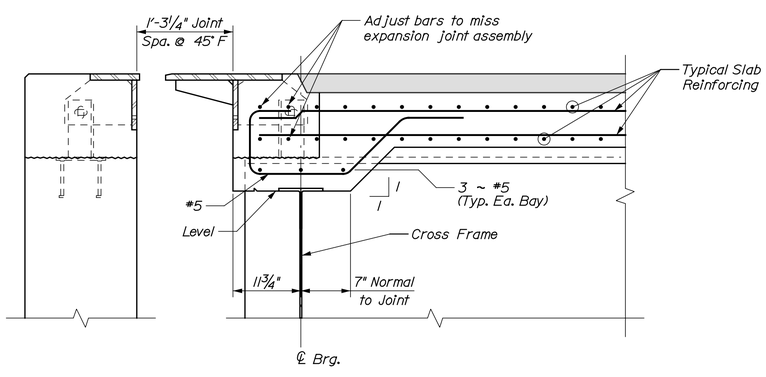

SECTION A-A ~ LONGITUDINAL SECTION

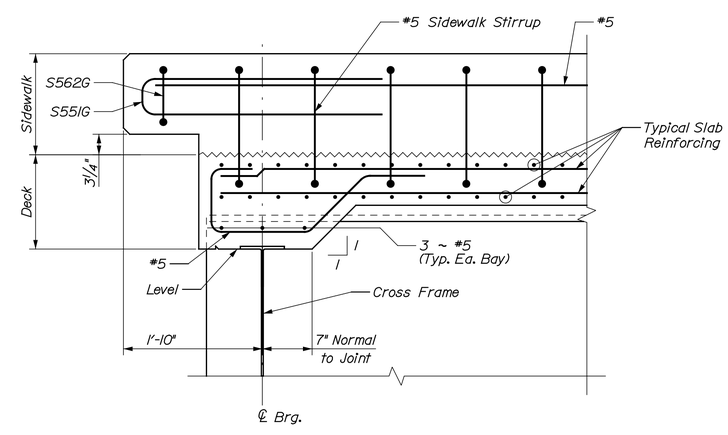

SECTION B-B ~ LONGITUDINAL SECTION

(At Sidewalk)

(Section at Curb similar)

(Expansion Dam not shown for clarity)

STATE OF MAINE
DEPARTMENT OF TRANSPORTATION

WIN 16705.00

BRIDGE NO. 2660

BRIDGE PLANS

PROJ. MANAGER	N.B.	BY	DATE
DESIGN-DETAILED	DSM	SAM	.
CHECKED-REVIEWED	RMH	RMH	.
DESIGN2-DETAILED2			
DESIGN3-DETAILED3			
REVISIONS 1			
REVISIONS 2			
REVISIONS 3			
REVISIONS 4			
FIELD CHANGES			

SIGNATURE

P.E. NUMBER

DATE

PENOBSCOT RIVER BRIDGE
PENOBSCOT RIVER
HOWLAND-ENFIELD PENOBSCOT COUNTY

SLAB REINFORCING SECTION

SHEET NUMBER

107

OF 127

T·Y·LIN INTERNATIONAL

Date:12/16/2014

Username:

Division:

Filename: ...\XXX_Slab_Reinf_Section.dgn

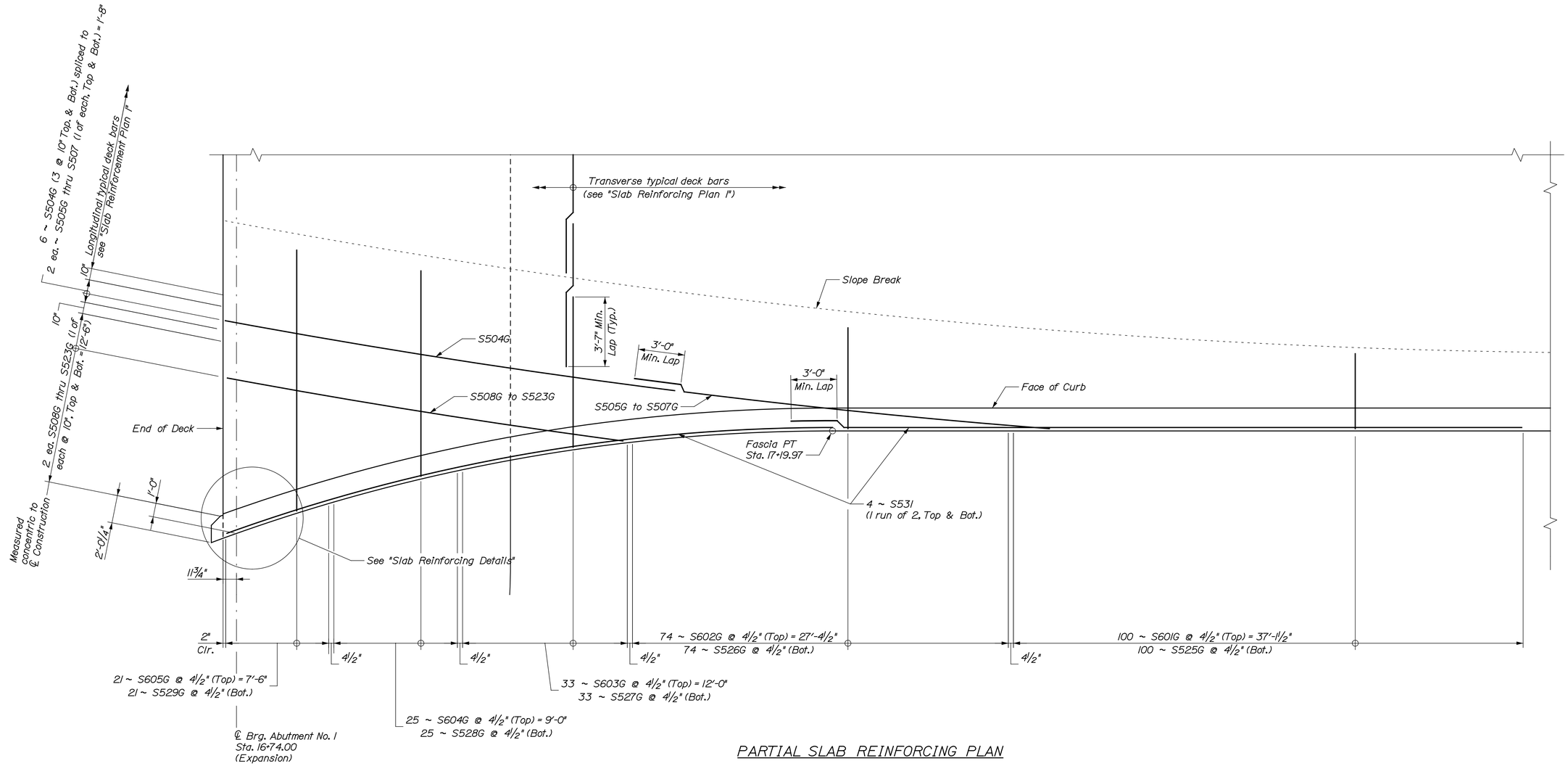

PARTIAL SLAB REINFORCING PLAN

Curb reinforcing and typical deck reinforcing not shown for clarity.

Date:12/16/2014

Username:

Division:

Filename: ...\XXX_Slab_Reinf_Partial_Plan.dgn

STATE OF MAINE
DEPARTMENT OF TRANSPORTATION

WIN 16705.00

BRIDGE NO. 2660

BRIDGE PLANS

PROJ. MANAGER	N.B.	BY	DATE
DESIGN-DETAILED	DSM	DSM	-
CHECKED-REVIEWED	RMH	RMH	-
DESIGN2-DETAILED2			
DESIGN3-DETAILED3			
REVISIONS 1			
REVISIONS 2			
REVISIONS 3			
REVISIONS 4			
FIELD CHANGES			

SIGNATURE

P.E. NUMBER

DATE

PENOBSCOT RIVER BRIDGE
PENOBSCOT RIVER
HOWLAND-ENFIELD PENOBSCOT COUNTY

PARTIAL SLAB
REINFORCING PLAN

SHEET NUMBER

108

OF 127

T·Y·LIN INTERNATIONAL

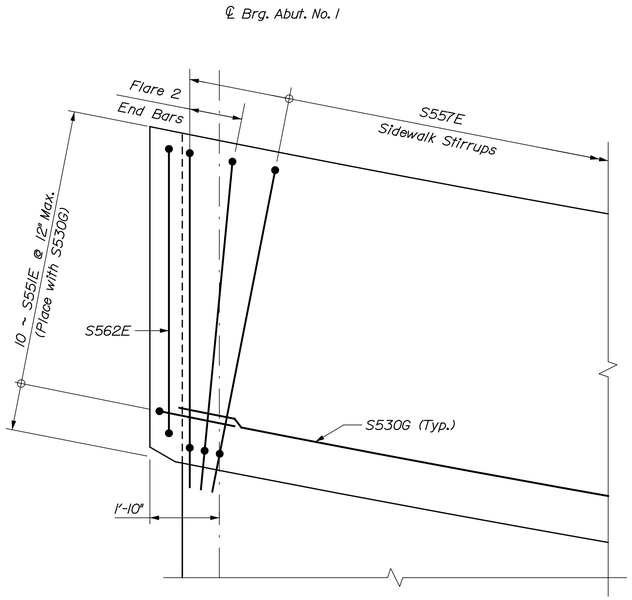

NORTHWEST CORNER

(Slab Reinforcing & Rail Post Stirrups not shown for clarity)

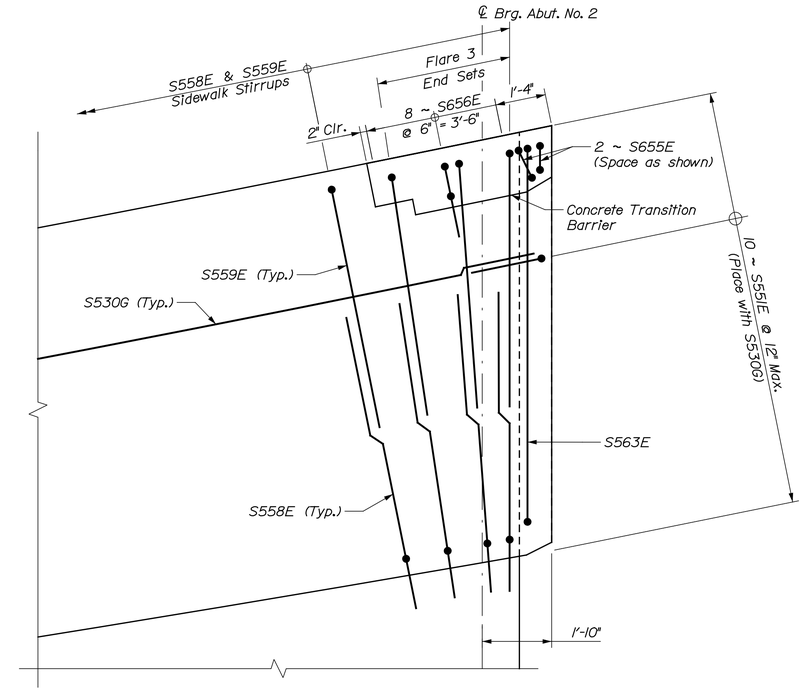

NORTHEAST CORNER

(Slab Reinforcing & Rail Post Stirrups not shown for clarity)

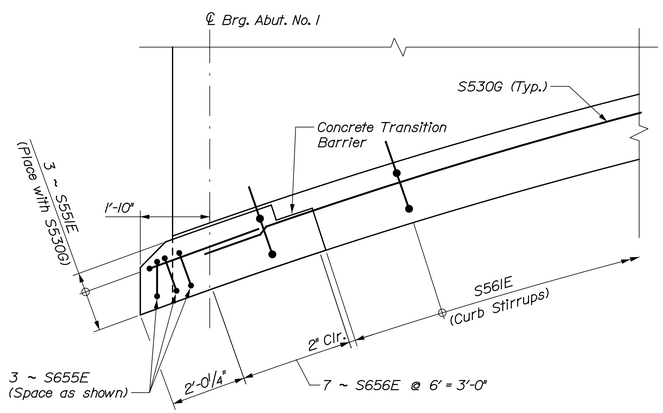

SOUTHWEST CORNER

(Slab Reinforcing & Rail Post Stirrups not shown for clarity)

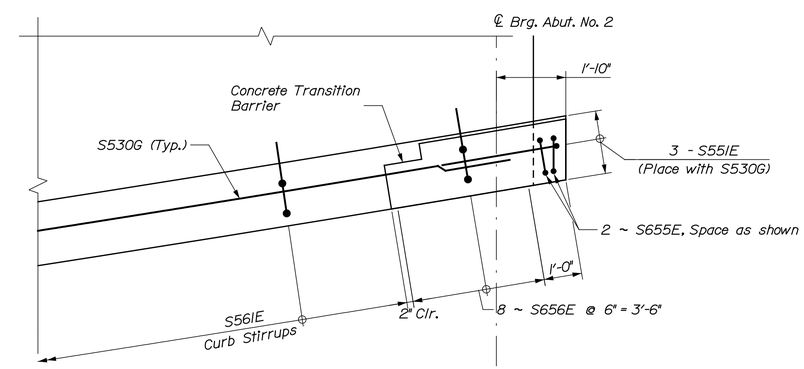

SOUTHEAST CORNER

(Slab Reinforcing & Rail Post Stirrups not shown for clarity)

T·Y·LIN INTERNATIONAL

STATE OF MAINE
DEPARTMENT OF TRANSPORTATION

BRIDGE PLANS

WIN 16705.00

BRIDGE NO. 2660

PROJ. MANAGER		N.B.	BY	DATE
DESIGN-DETAILED	DSM	SAM	.
CHECKED-REVIEWED	RMH	RMH	.
DESIGN2-DETAILED2			
DESIGN3-DETAILED3			
REVISIONS 1			
REVISIONS 2			
REVISIONS 3			
REVISIONS 4			
FIELD CHANGES			

SIGNATURE

P.E. NUMBER

DATE

PENOBSCOT RIVER BRIDGE
PENOBSCOT RIVER
HOWLAND-ENFIELD PENOBSCOT COUNTY

SLAB REINFORCING DETAILS 1

SHEET NUMBER

109

OF 127

Filename: ...\XXX_Slab_Reinf_Details1.dgn Division: Username: Date:12/16/2014

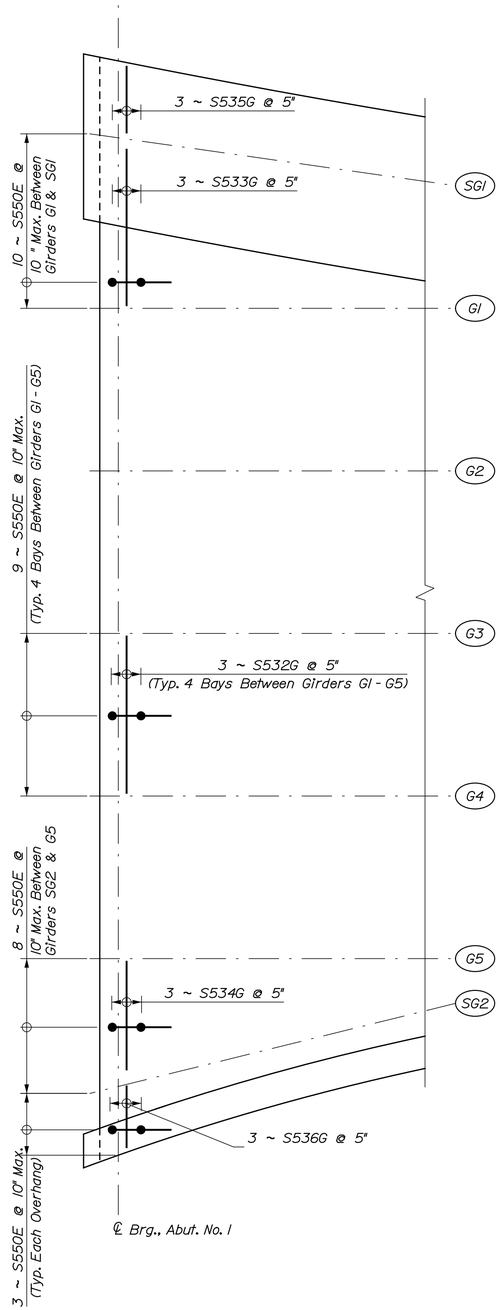

END OF DECK REINFORCING - ABUTMENT 1

(Deck haunch reinforcing only shown for clarity)

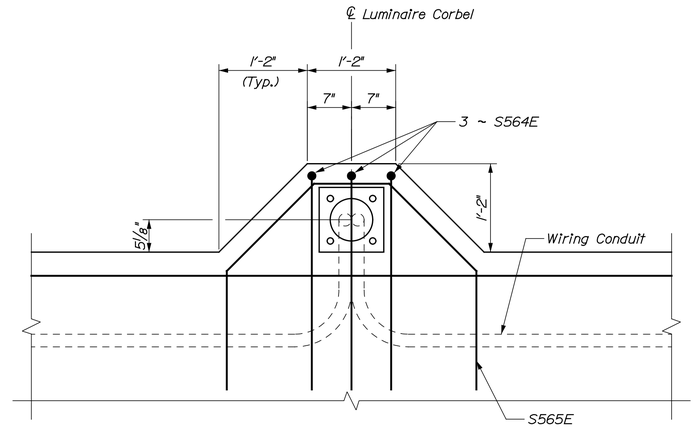

LUMINAIRE CORBEL - PLAN

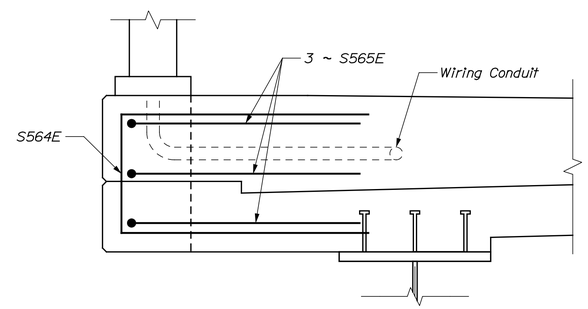

LUMINAIRE CORBEL - SECTION

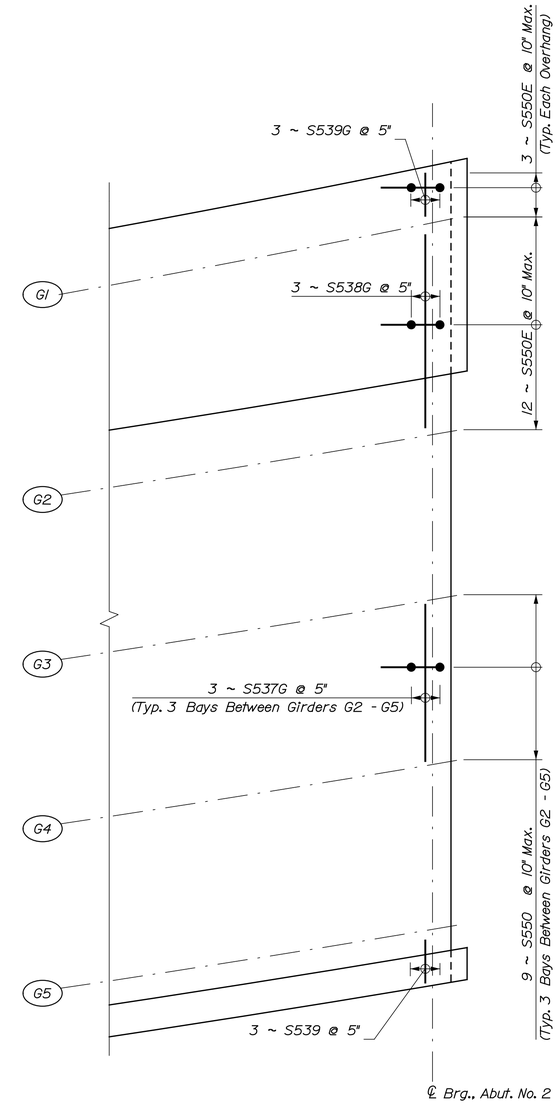

END OF DECK REINFORCING - ABUTMENT 2

(Deck haunch reinforcing only shown for clarity)

STATE OF MAINE
DEPARTMENT OF TRANSPORTATION

BRIDGE PLANS

WIN 16705.00

BRIDGE NO. 2660

PROJ. MANAGER	N.E.B	BY	DATE
DESIGN-DETAILED	DSM	TJP	.
CHECKED-REVIEWED	.	.	.
DESIGN2-DETAILED2			
DESIGN3-DETAILED3			
REVISIONS 1			
REVISIONS 2			
REVISIONS 3			
REVISIONS 4			
FIELD CHANGES			

SIGNATURE

P.E. NUMBER

DATE

PENOBSCOT RIVER BRIDGE
PENOBSCOT RIVER
HOWLAND-ENFIELD PENOBSCOT COUNTY

SLAB REINFORCING DETAILS 2

T·Y·LIN INTERNATIONAL

SHEET NUMBER

110

OF 127

Filename: ...\XXX_Slab_Reinf_Details 2.dgn Division: Username: Date:12/16/2014

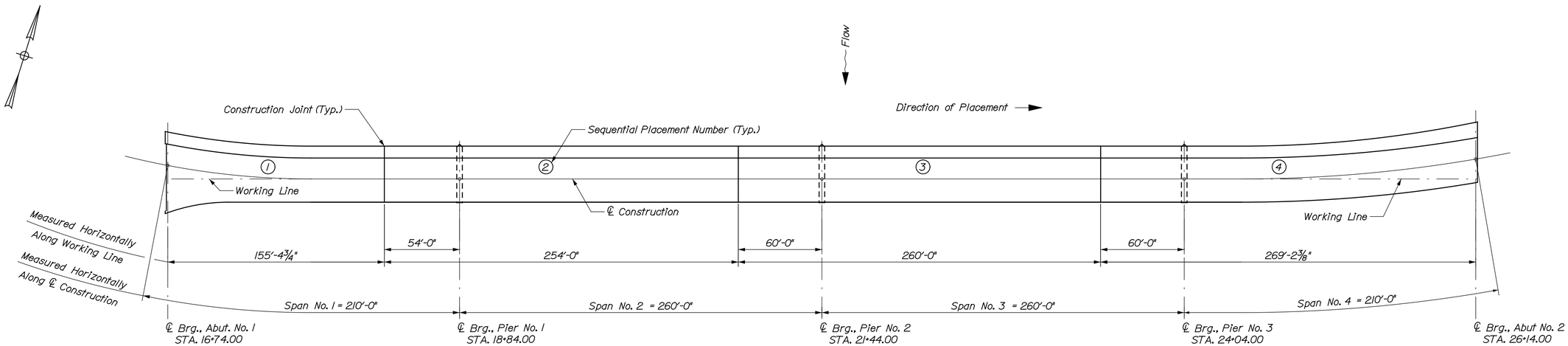

SLAB PLACEMENT SEQUENCE

T·Y·LIN INTERNATIONAL

STATE OF MAINE
DEPARTMENT OF TRANSPORTATION

BRIDGE NO. 2660
WIN 16705.00
BRIDGE PLANS

PROJ. MANAGER	N.B.	BY	DATE
DESIGN-DETAILED	DSM	SAM	.
CHECKED-REVIEWED	RMH	RMH	.
DESIGN2-DETAILED2			
DESIGN3-DETAILED3			
REVISIONS 1			
REVISIONS 2			
REVISIONS 3			
REVISIONS 4			
FIELD CHANGES			

SIGNATURE

P.E. NUMBER

DATE

PENOBSCOT RIVER BRIDGE
PENOBSCOT RIVER
HOWLAND-ENFIELD PENOBSCOT COUNTY

SLAB PLACEMENT SEQUENCE

SHEET NUMBER
111
OF 127

Filename: ...\XXX_Slab_Placement_Sequence.dgn Division: Username: Date:12/16/2014

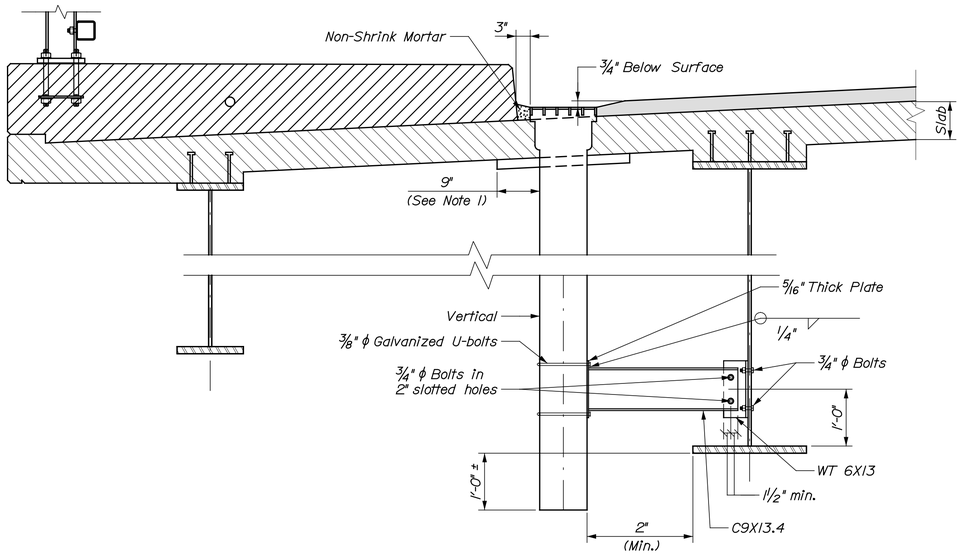

BRIDGE DRAIN - TYPE B - ELEVATION AT SIDEWALK

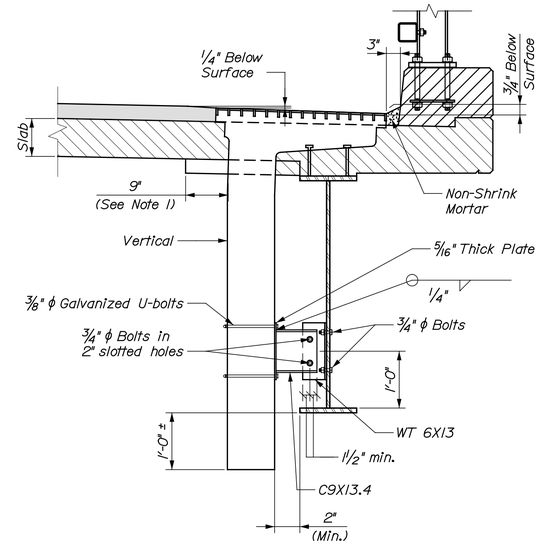

BRIDGE DRAIN - TYPE G - ELEVATION AT CURB

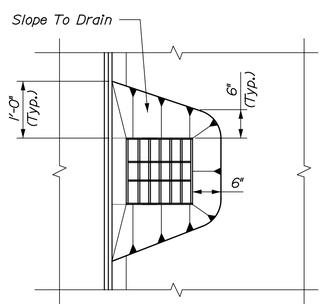

BRIDGE DRAIN - PLAN

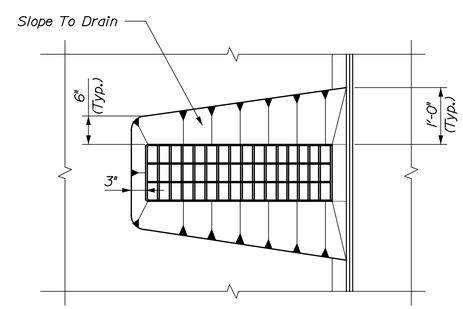

BRIDGE DRAIN - PLAN

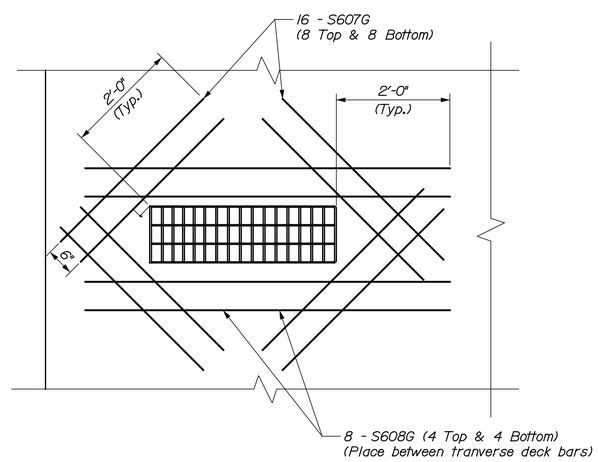

DECK DRAIN REINFORCING PLAN

Deck reinforcement not shown for clarity

Note: Cut Longitudinal Bars and Transverse Bars as Necessary
(Top & Bottom)

NOTE:

1. If the minimum thickness of concrete below the drain pan is 2 inches or less, the concrete deck shall be thickened as shown.

T·Y·LIN INTERNATIONAL

STATE OF MAINE
DEPARTMENT OF TRANSPORTATION

BRIDGE PLANS

WIN 16705.00

BRIDGE NO. 2660

	N.B.	BY	DATE
PROJ. MANAGER			
DESIGN-DETAILED	DSM	SAM	.
CHECKED-REVIEWED	RMH	RMH	.
DESIGN2-DETAILED2			
DESIGN3-DETAILED3			
REVISIONS 1			
REVISIONS 2			
REVISIONS 3			
REVISIONS 4			
FIELD CHANGES			

SIGNATURE

P.E. NUMBER

DATE

PENOBSCOT RIVER BRIDGE
PENOBSCOT RIVER
HOWLAND-ENFIELD PENOBSCOT COUNTY

BRIDGE DRAIN DETAILS

SHEET NUMBER
112
OF 127

Filename: ...\MSTA\XXX_Bridge_Drain.dgn Division: Username: Date:12/16/2014

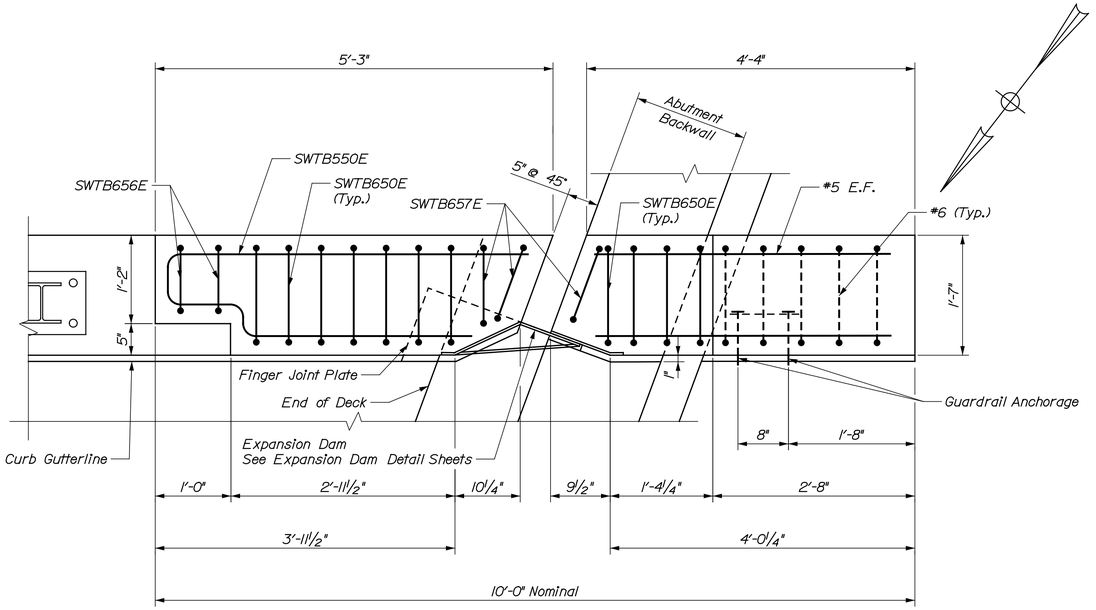

SOUTHWEST TRANSITION BARRIER PLAN

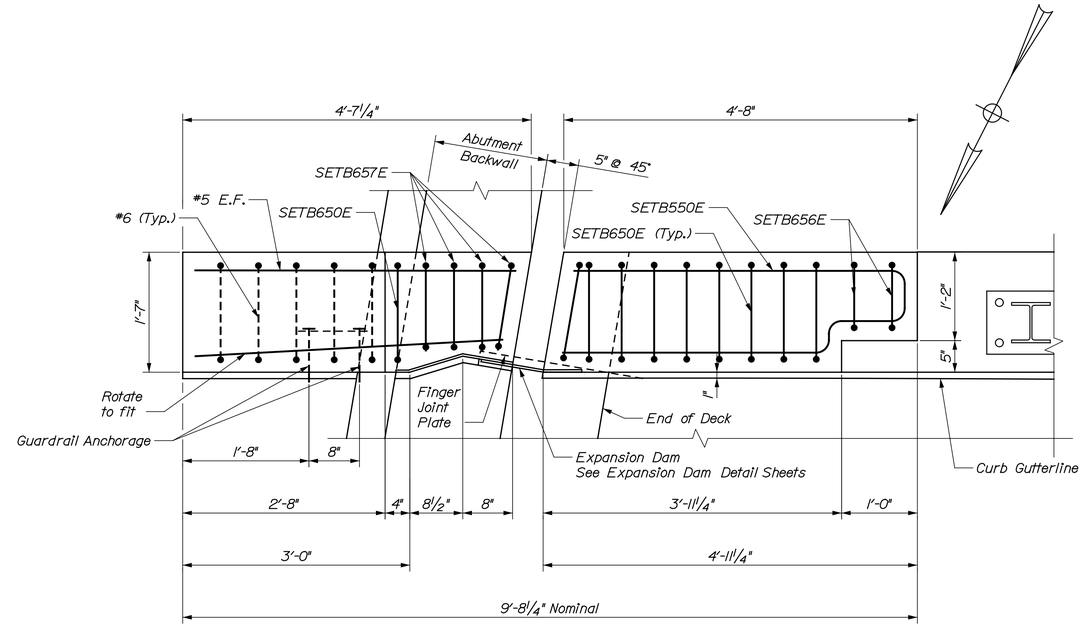

SOUTHEAST TRANSITION BARRIER PLAN

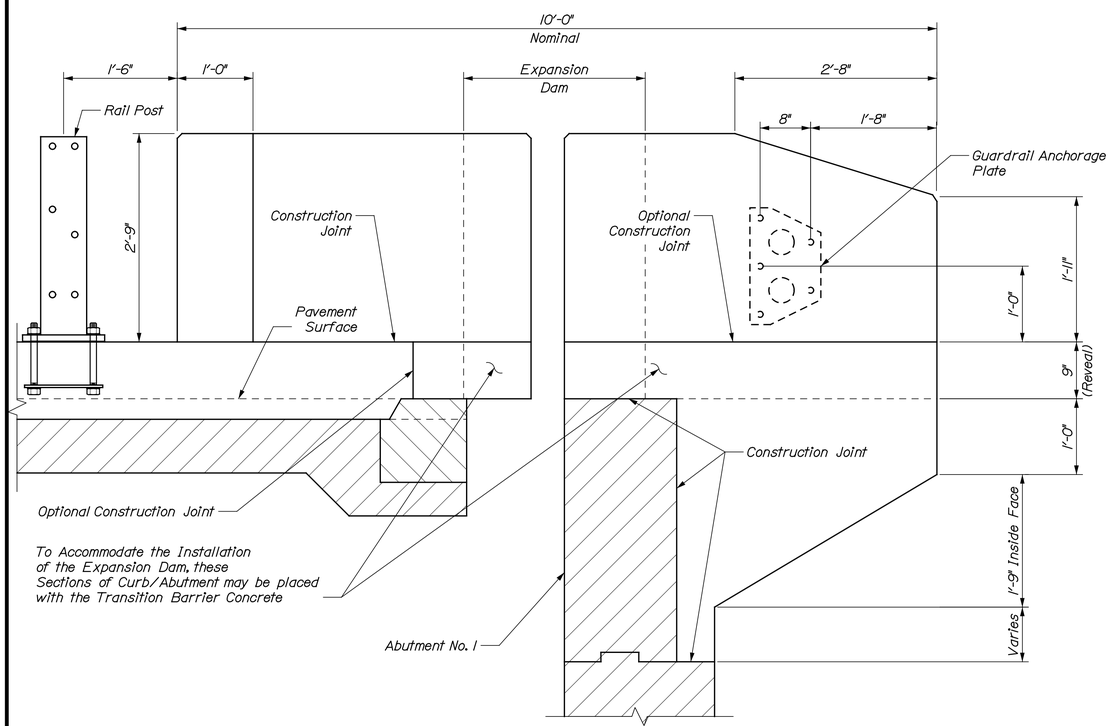

SOUTHWEST TRANSITION BARRIER ELEVATION

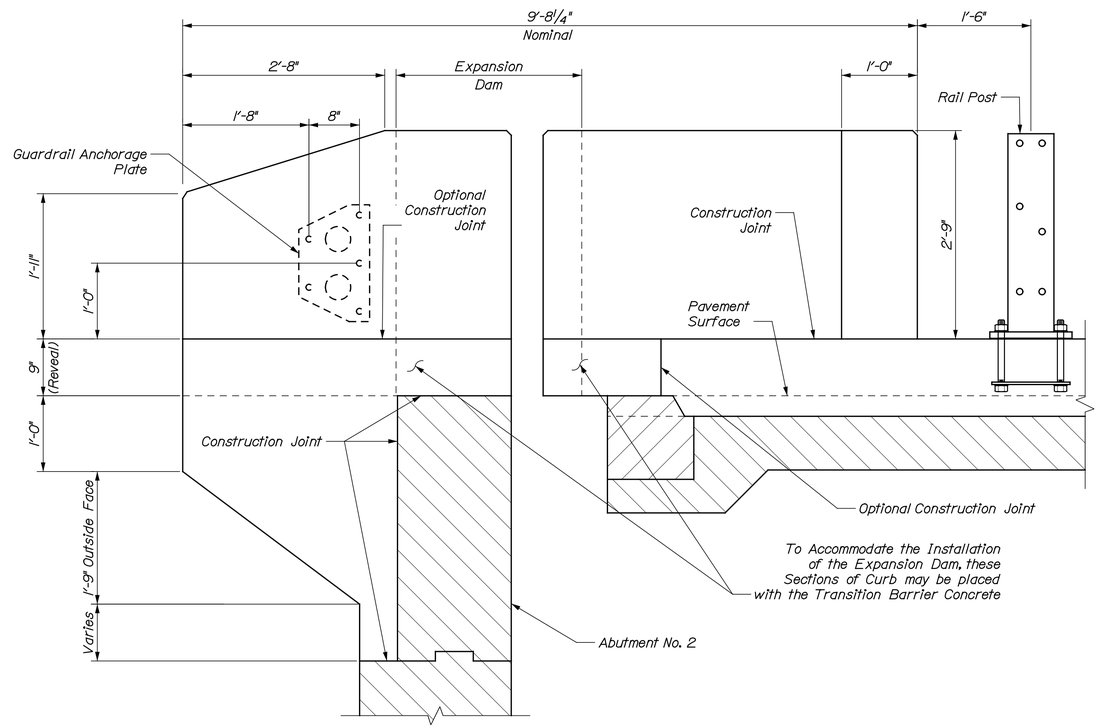

SOUTHEAST TRANSITION BARRIER ELEVATION

T·Y·LIN INTERNATIONAL

STATE OF MAINE
DEPARTMENT OF TRANSPORTATION

BRIDGE PLANS

WIN 16705.00

BRIDGE NO. 2660

PROJ. MANAGER		
DESIGN-DETAILED	T.JP	
CHECKED-REVIEWED	RMH	
DESIGN2-DETAILED2		
DESIGN3-DETAILED3		
REVISIONS 1		
REVISIONS 2		
REVISIONS 3		
REVISIONS 4		
FIELD CHANGES		

NLB	BY	DATE
	T.JP	.
	RMH	.

SIGNATURE

P.E. NUMBER

DATE

PENOBSCOT RIVER BRIDGE
PENOBSCOT RIVER
HOWLAND-ENFIELD PENOBSCOT COUNTY

CONCRETE TRANSITION BARRIER 1

SHEET NUMBER

113

OF 127

Filename: ...\XXX_Conc_Trans_Barrier 1.dgn Division: Username: Date:12/16/2014

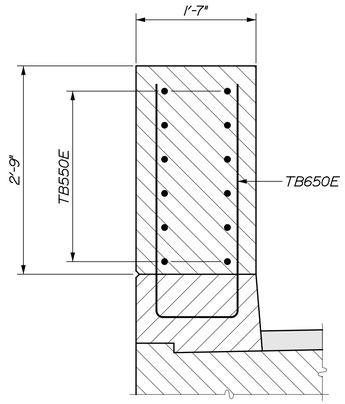

SECTION A-A

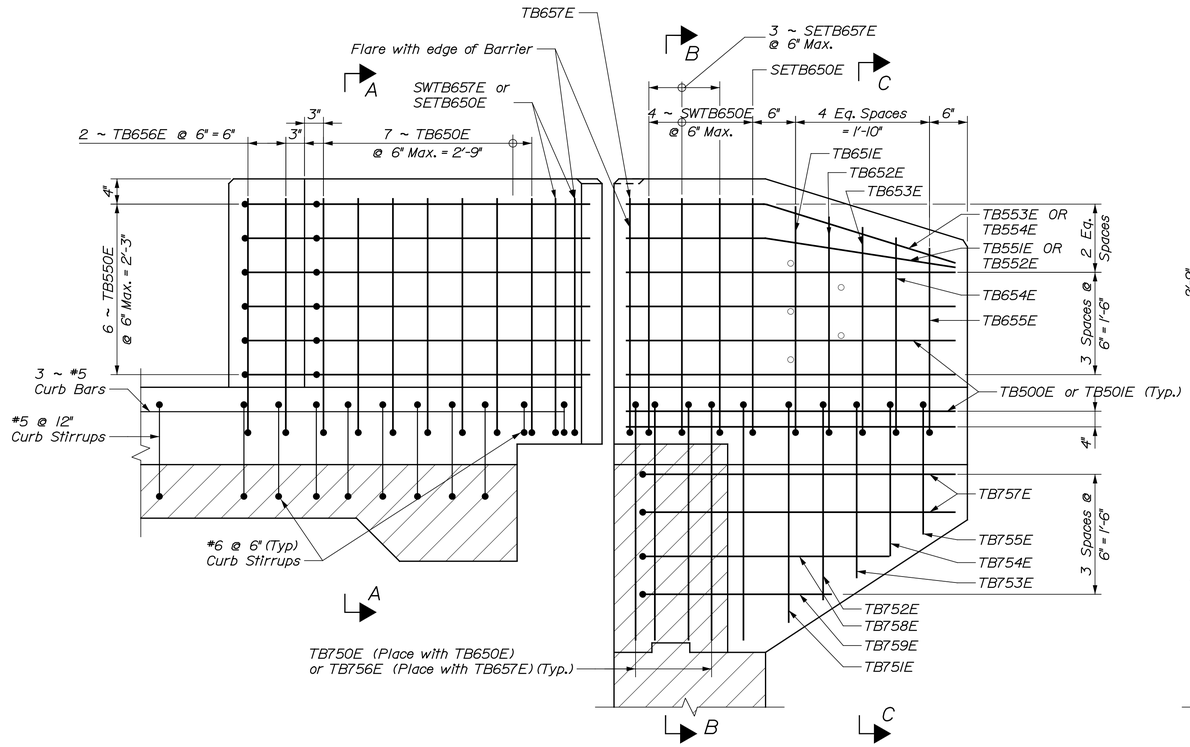

SOUTHEAST AND SOUTHWEST TRANSITION BARRIER REINFORCING ELEVATION

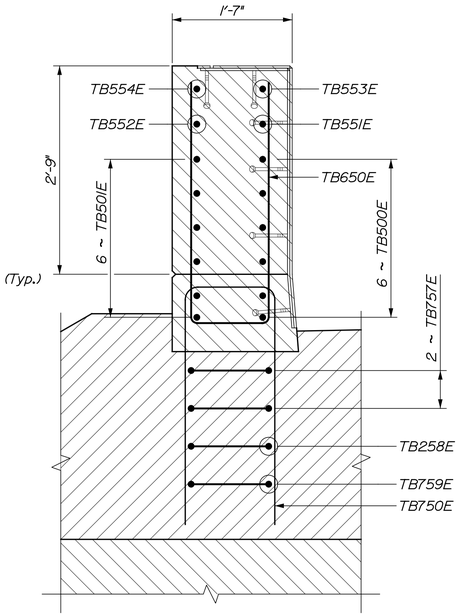

SECTION B-B

TRANSITION BARRIER NOTES

1. Refer to Standard Details Section 526 for Guardrail Anchorage, Precast Concrete Transition Curb and Notes.
2. All reinforcing steel in the Transition Barriers shall be Epoxy-Coated Reinforcing Steel
3. Bar designations shown as TBXXX are either SWTBXXX or SETBXXX, corresponding to the southwest and southeast transition barriers respectivley.

SOUTHWEST TRANSITION BARRIER REINFORCING STEEL SCHEDULE

Bent Bars

Mark	Qty.	Length	Dim "R"
SWTB550E	6	9'-10½"	
SWTB551E	1	3'-11"	1'-5"
SWTB552E	1	4'-0"	1'-6"
SWTB553E	1	4'-0"	1'-5"
SWTB554E	1	4'-1"	1'-6"
SWTB650E	11	7'-7"	3'-2"
SWTB651E	1	7'-5"	3'-1"
SWTB652E	1	7'-1"	2'-11"
SWTB653E	1	6'-9"	2'-9"
SWTB654E	1	6'-5"	2'-7"
SWTB655E	1	6'-3"	2'-6"
SWTB656E	2	7'-2"	
SWTB657E	3	7'-4"	3'-2"
SWTB750E	4	7'-7"	3'-2"
SWTB751E	1	6'-9"	2'-9"
SWTB752E	1	6'-1"	2'-5"
SWTB753E	1	5'-7"	2'-2"
SWTB754E	1	4'-11"	1'-10"
SWTB755E	1	4'-5"	1'-7"
SWTB756E	1	7'-4"	3'-2"
SWTB757E	2	9'-1"	4'-0"
SWTB258E	1	7'-9"	3'-4"
SWTB759E	1	6'-5"	2'-8"

Straight Bars

Mark	Qty.	Length
SWTB500E	6	3'-11"
SWTB501E	6	4'-0"

Note:
Bar Mark SWTB5XX = #5 Bar
Bar Mark SWTB6XX = #6 Bar
Bar Mark SWTB7XX = #7 Bar

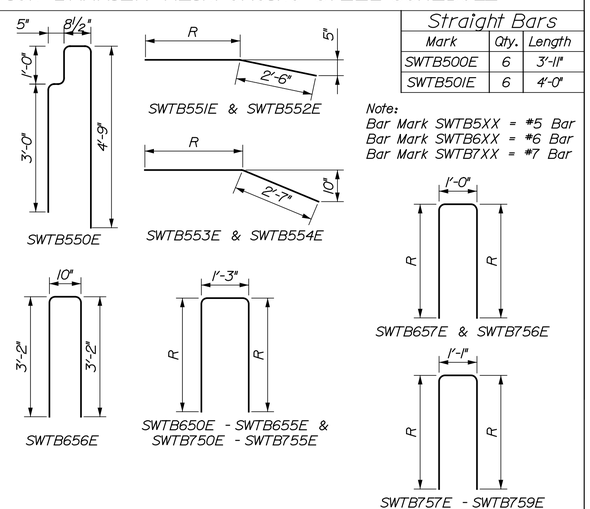

SOUTHEAST TRANSITION BARRIER REINFORCING STEEL SCHEDULE

Bent Bars

Mark	Qty.	Length	Dim "R"
SETB550E	6	9'-11½	
SETB551E	1	4'-0"	4'-0"
SETB552E	1	4'-2"	3'-4"
SETB553E	1	4'-1"	2'-6"
SETB554E	1	4'-3"	1'-6"
SETB650E	10	7'-7"	1'-8"
SETB651E	1	7'-5"	1'-6"
SETB652E	1	7'-1"	1'-8"
SETB653E	1	6'-9"	3'-2"
SETB654E	1	6'-5"	3'-1"
SETB655E	1	6'-3"	2'-11"
SETB656E	2	7'-2"	
SETB657E	4	7'-5"	3'-2"
SETB750E	1	7'-7"	3'-2"
SETB751E	1	6'-9"	2'-9"
SETB752E	1	6'-1"	2'-5"
SETB753E	1	5'-7"	2'-2"
SETB754E	1	4'-11"	1'-10"
SETB755E	1	4'-5"	1'-7"
SETB756E	4	7'-5"	3'-2"
SETB757E	2	9'-1"	4'-0"
SETB758E	1	7'-9"	3'-4"
SETB759E	1	6'-1"	2'-6"

Straight Bars

Mark	Qty.	Length
SETB500E	6	4'-0"
SETB501E	6	4'-2"

Note:
Bar Mark SETB5XX = #5 Bar
Bar Mark SETB6XX = #6 Bar
Bar Mark SETB7XX = #7 Bar

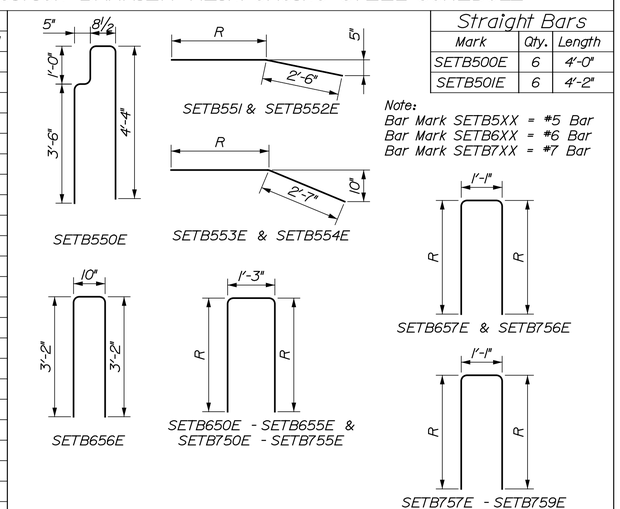

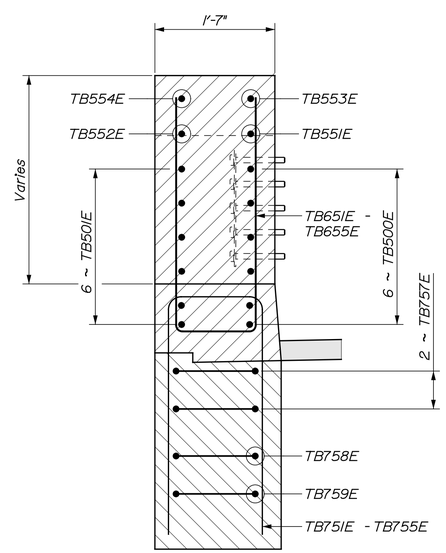

SECTION C-C

TY·LIN INTERNATIONAL

STATE OF MAINE
DEPARTMENT OF TRANSPORTATION

BRIDGE PLANS

WIN 16705.00

BRIDGE NO. 2660

	N.B.	BY	DATE
PROJ. MANAGER			
DESIGN-DETAILED	TJP	TJP	.
CHECKED-REVIEWED	RMH	RMH	.
DESIGN2-DETAILED2			
DESIGN3-DETAILED3			
REVISIONS 1			
REVISIONS 2			
REVISIONS 3			
REVISIONS 4			
FIELD CHANGES			

SIGNATURE

P.E. NUMBER

DATE

PENOBSCOT RIVER BRIDGE
PENOBSCOT RIVER
HOWLAND-ENFIELD PENOBSCOT COUNTY

CONCRETE TRANSITION BARRIER 2

SHEET NUMBER
114
OF 127

Date:12/16/2014
Username:
Division:
Filename: ...\XXX_Conc_Trans_Barrier 2.dgn

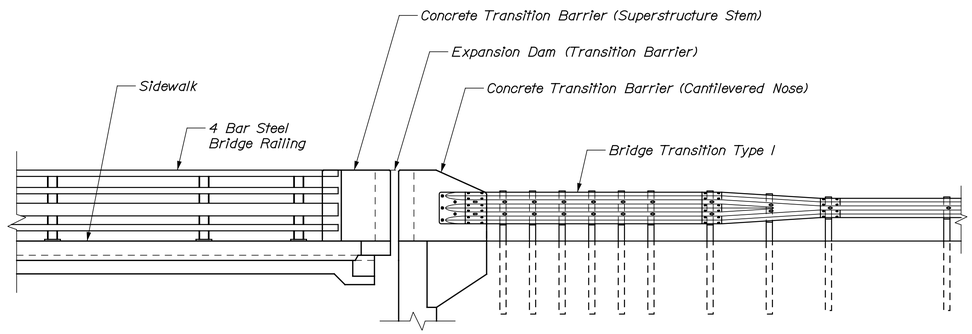

NORTHEAST TRANSITION BARRIER - GENERAL ELEVATION

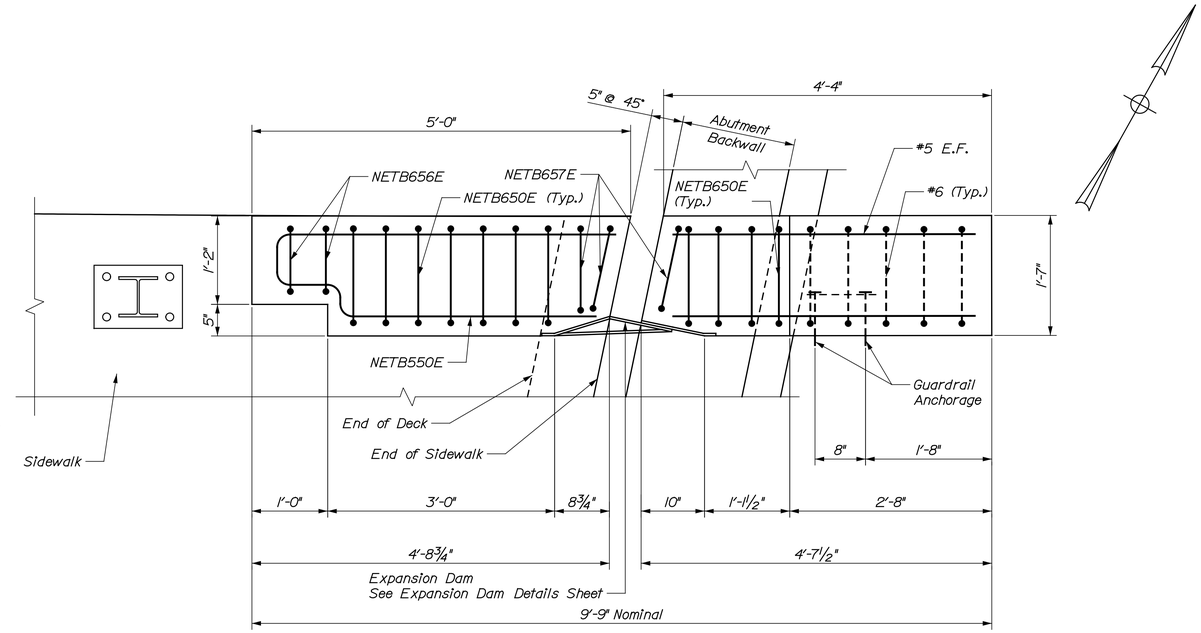

NORTHEAST TRANSITION BARRIER PLAN

Note:
Two segments of Concrete Transition Barrier (Superstructure Stem and Cantilevered Nose) at northeast, southeast and southwest shall be paid as one unit (each) together under Item 526.3401 Permanent Concrete Transition Barrier, Modified.

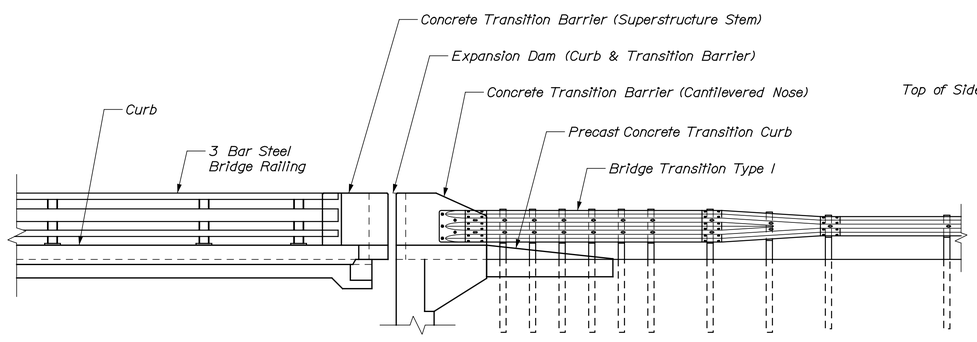

SOUTHEAST AND SOUTHWEST TRANSITION BARRIER - GENERAL ELEVATION

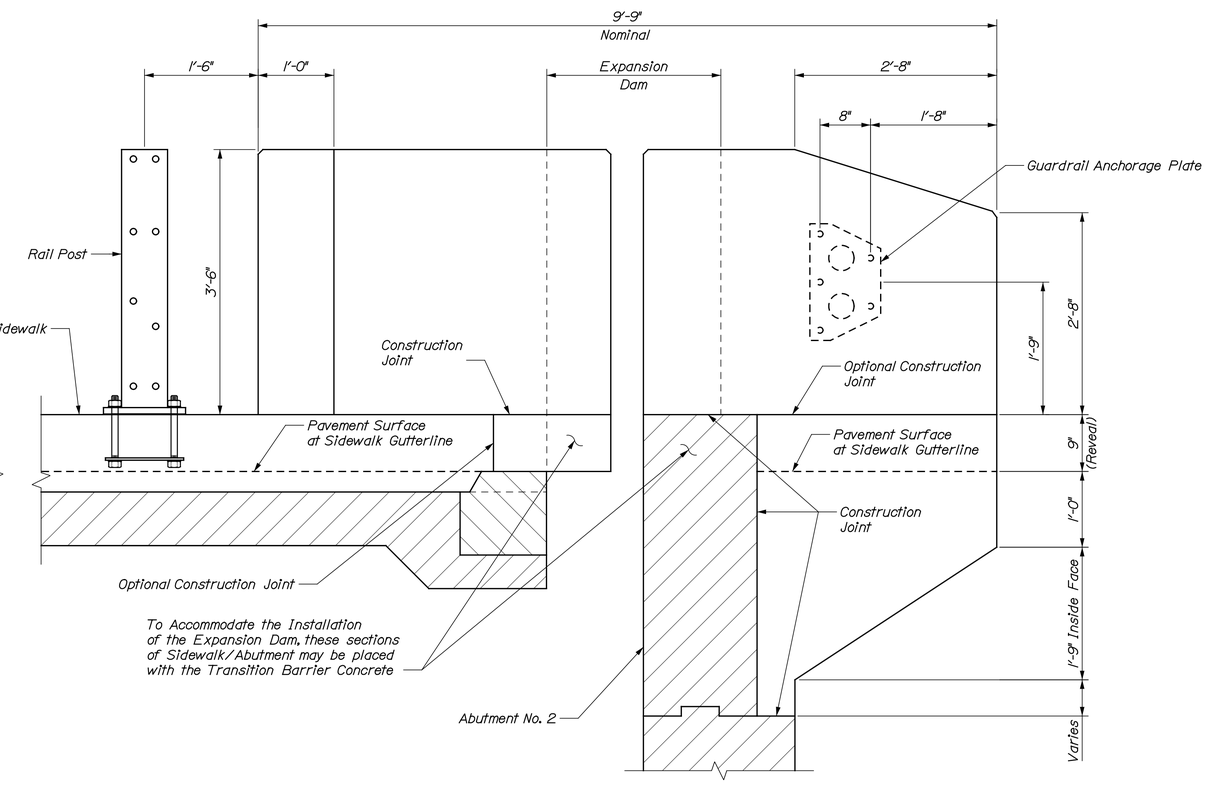

NORTHEAST TRANSITION BARRIER ELEVATION

TY·LIN INTERNATIONAL

STATE OF MAINE
DEPARTMENT OF TRANSPORTATION

BRIDGE PLANS

WIN 16705.00

BRIDGE NO. 2660

PROJ. MANAGER	N.B.	BY	DATE
DESIGN-DETAILED	T.P.	T.P.	.
CHECKED-REVIEWED	RMH	RMH	.
DESIGN2-DETAILED2			
DESIGN3-DETAILED3			
REVISIONS 1			
REVISIONS 2			
REVISIONS 3			
REVISIONS 4			
FIELD CHANGES			

SIGNATURE

P.E. NUMBER

DATE

PENOBSCOT RIVER BRIDGE
PENOBSCOT RIVER
HOWLAND-ENFIELD PENOBSCOT COUNTY

CONCRETE TRANSITION BARRIER 3

SHEET NUMBER
115
OF 127

Filename: ...\XXX_Conc_Trans_Barrier 3.dgn Division: Username: Date:12/16/2014

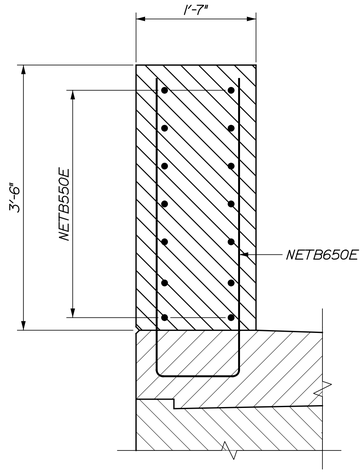

SECTION A-A

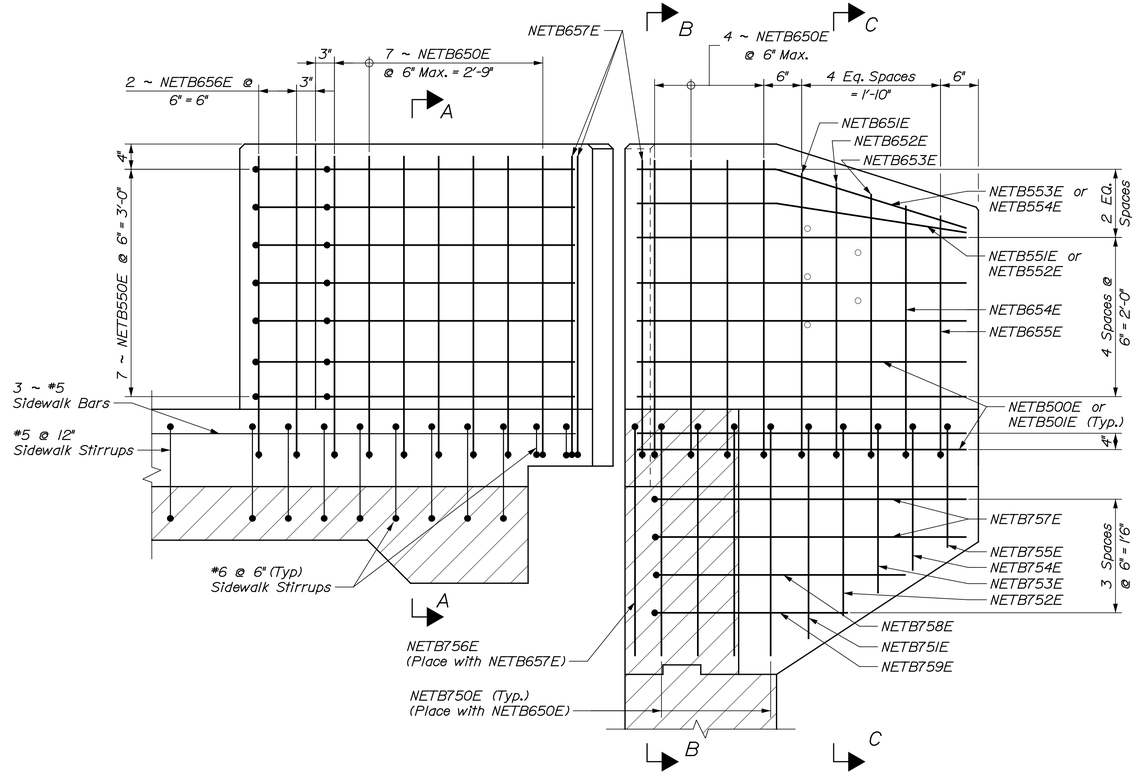

NORTHEAST TRANSITION BARRIER REINFORCING ELEVATION

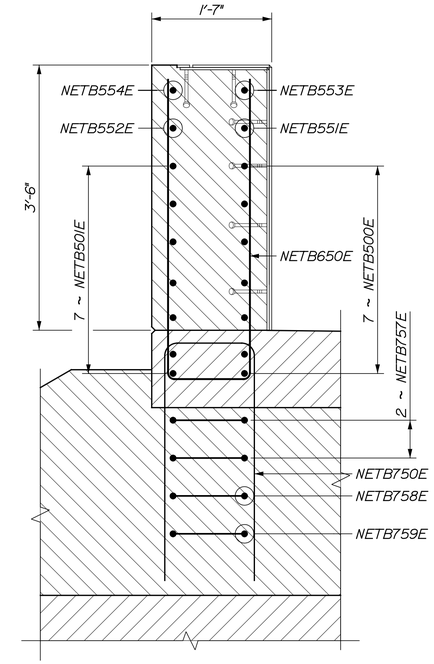

SECTION B-B

TRANSITION BARRIER NOTES

1. Refer to Standard Details Section 526 for Guardrail Anchorage and Notes.

   All reinforcing steel in the Transition Barriers shall be Epoxy-Coated
2. Reinforcing Steel.

NORTHEAST TRANSITION BARRIER REINFORCING STEEL SCHEDULE

Bent Bars

Mark	Qty.	Length	Dim "R"
NETB550E	7	9'-10½	
NETB551E	1	4'-1"	1'-7"
NETB552E	1	4'-0"	1'-6"
NETB553E	1	4'-2"	1'-7"
NETB554E	1	4'-1"	1'-6"
NETB650E	11	9'-1"	3'-11"
NETB651E	1	8'-11"	3'-10"
NETB652E	1	8'-7"	3'-8"
NETB653E	1	8'-3"	3'-6"
NETB654E	1	7'-11"	3'-4"
NETB655E	1	7'-9"	3'-3"
NETB656E	2	8'-10"	
NETB657E	3	8'-11"	3'-11"
NETB750E	4	7'-7"	3'-2"
NETB751E	1	6'-9"	2'-9"
NETB752E	1	6'-1"	2'-5"
NETB753E	1	5'-7"	2'-2"
NETB754E	1	4'-11"	1'-10"
NETB755E	1	4'-5"	1'-7"
NETB756E	1	7'-5"	3'-2"
NETB757E	2	9'-1"	4'-0"
NETB758E	1	7'-9"	3'-4"
NETB759E	1	6'-5"	2'-8"

Straight Bars

Mark	Qty.	Length
NETB500E	7	4'-1"
NETB501E	7	4'-0"

Note:
Bar Mark NETB5XX = #5 Bar
Bar Mark NETB6XX = #6 Bar
Bar Mark NETB7XX = #7 Bar

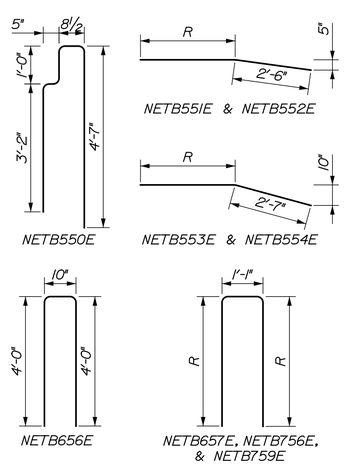

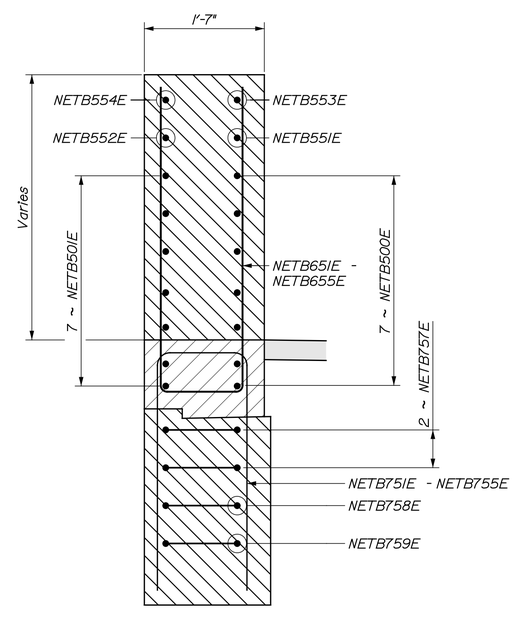

SECTION C-C

T·Y·LIN INTERNATIONAL

STATE OF MAINE
DEPARTMENT OF TRANSPORTATION

BRIDGE PLANS

WIN 16705.00

BRIDGE NO. 2660

PROJ. MANAGER	N.B	BY	DATE
DESIGN-DETAILED	T.JP	T.JP	.
CHECKED-REVIEWED	RMH	RMH	.
DESIGN2-DETAILED2			
DESIGN3-DETAILED3			
REVISIONS 1			
REVISIONS 2			
REVISIONS 3			
REVISIONS 4			
FIELD CHANGES			

SIGNATURE

P.E. NUMBER

DATE

PENOBSCOT RIVER BRIDGE
PENOBSCOT RIVER
HOWLAND-ENFIELD PENOBSCOT COUNTY

CONCRETE TRANSITION BARRIER 4

SHEET NUMBER
116
OF 127

Date:12/16/2014
Username:
Division:
Filename: ...\XXX_Conc_Trans_Barrier 4.dgn

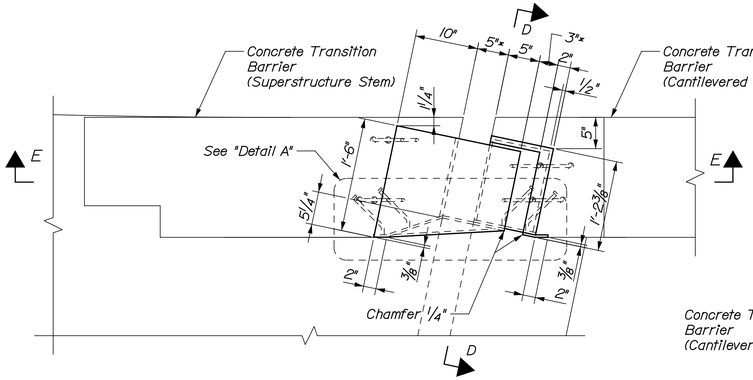

NORTHEAST BARRIER EXPANSION DAM PLAN

* Dimension @ 45° F

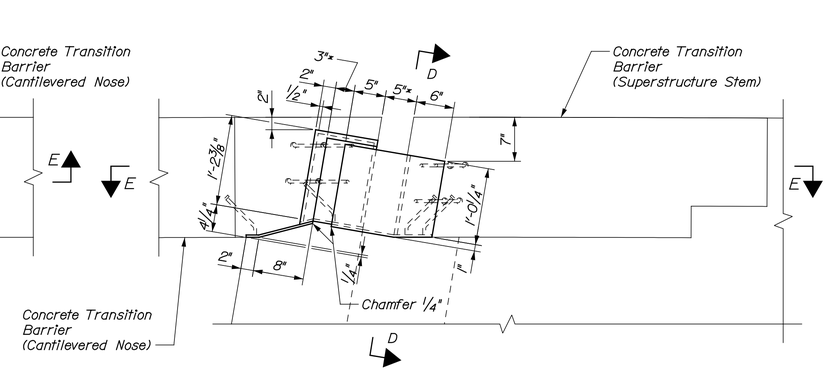

SOUTHEAST BARRIER EXPANSION DAM PLAN

* Dimension @ 45° F

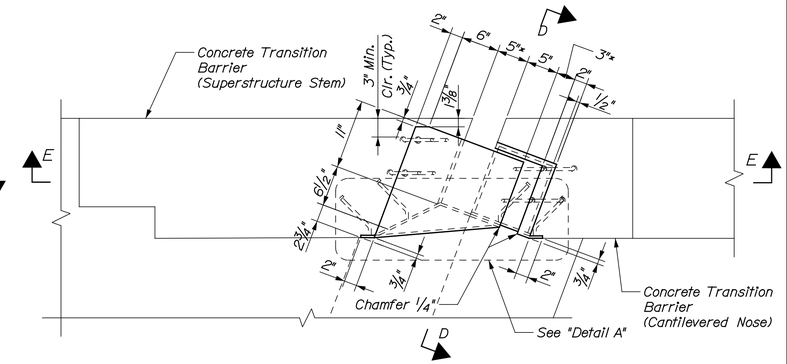

SOUTHWEST BARRIER EXPANSION DAM PLAN

* Dimension @ 45° F

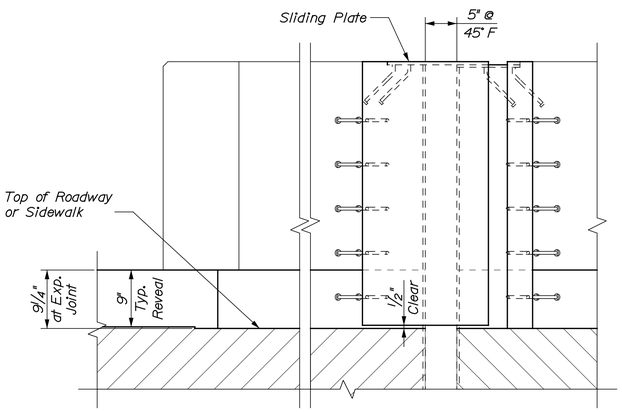

BARRIER EXPANSION DAM ELEVATION

Southwest Exp. Dam Shown: Southeast Exp. Dam and Northeast Exp. Dam Similar

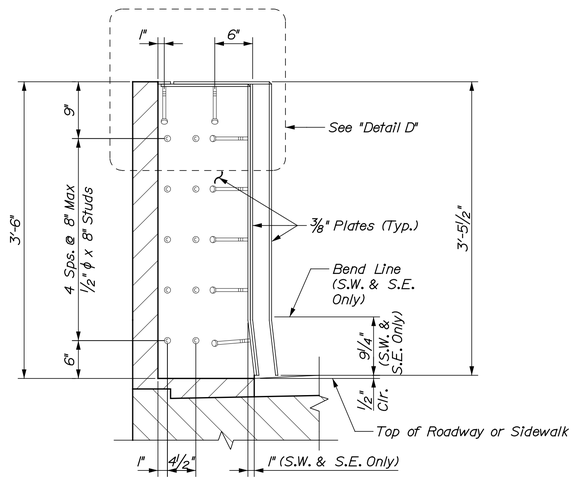

SECTION D-D

Southwest Exp. Dam Shown: Southeast Exp. Dam similar
Northeast Exp. Dam similar except no additional plate

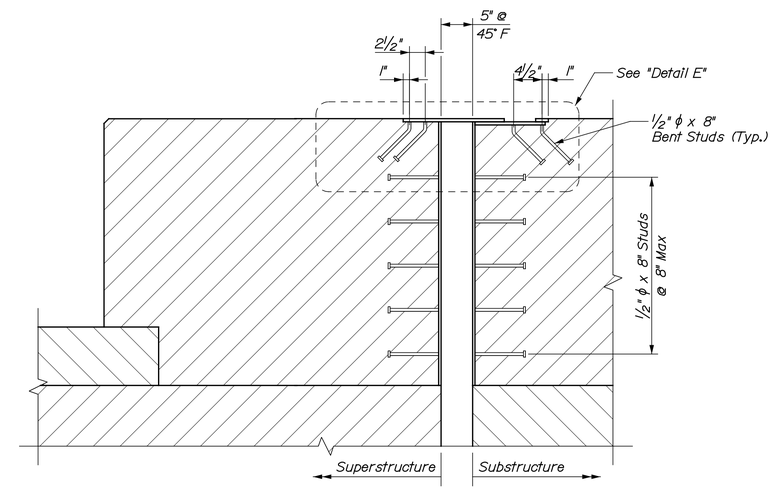

SECTION E-E

Southwest Exp. Dam Shown: Southeast Exp. Dam and Northeast Exp. Dam Similar

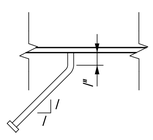

BENT STUD DETAIL

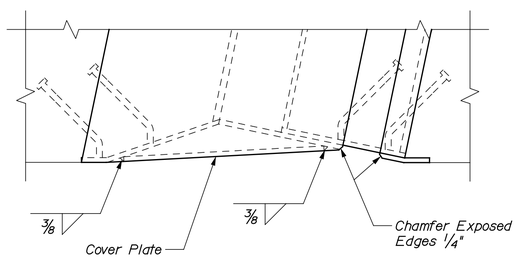

DETAIL "A"

All Plates 3/8" Thick

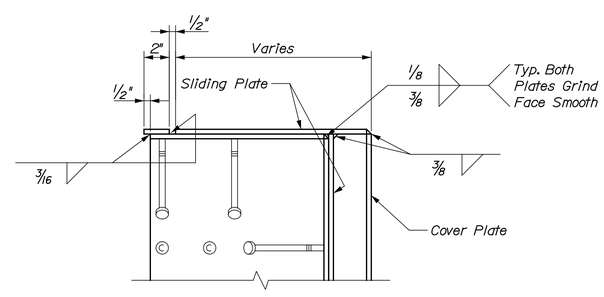

DETAIL "D"

All Plates 3/8" Thick

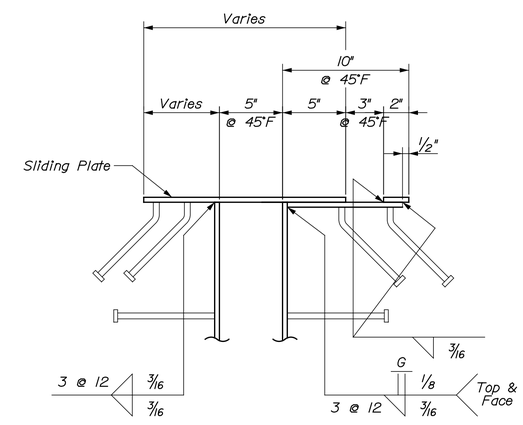

DETAIL "E"

All Plates 3/8" Thick

T·Y·LIN INTERNATIONAL

STATE OF MAINE
DEPARTMENT OF TRANSPORTATION

BRIDGE PLANS

WIN 16705.00

BRIDGE NO. 2660

PROJ. MANAGER	N.B.		
DESIGN-DETAILED	T.JP	BY	DATE
CHECKED-REVIEWED		SAM	.
DESIGN2-DETAILED2			
DESIGN3-DETAILED3			
REVISIONS 1			
REVISIONS 2			
REVISIONS 3			
REVISIONS 4			
FIELD CHANGES			

SIGNATURE

P.E. NUMBER

DATE

PENOBSCOT RIVER BRIDGE
PENOBSCOT RIVER
HOWLAND-ENFIELD PENOBSCOT COUNTY

EXPANSION DAM DETAILS 1

SHEET NUMBER

117

OF 127

Filename: ...\MSTA\XXX_Expansion_Dams 1.dgn Division: Username: Date:12/16/2014

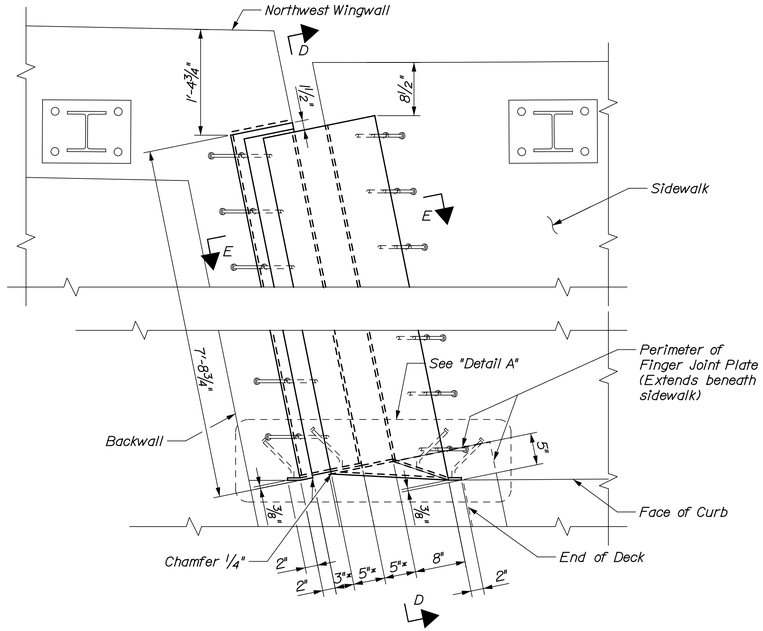

NORTHWEST SIDEWALK EXPANSION DAM PLAN

* Dimension @ 45° F
End Post Expansion Dam and Finger Joint Not Shown for Clarity

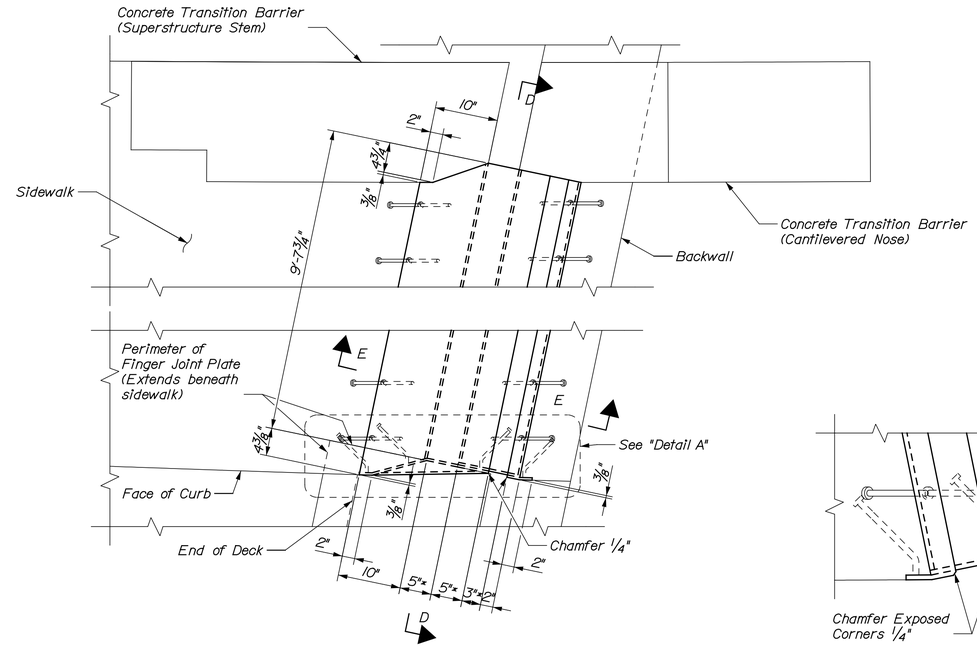

NORTHEAST SIDEWALK EXPANSION DAM PLAN

* Dimension @ 45° F
End Post Expansion Dam and Finger Joint Not Shown for Clarity

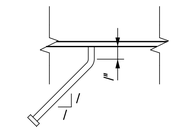

BENT STUD DETAIL

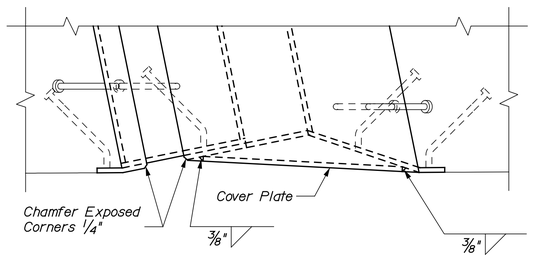

DETAIL "A"

Detail at Northwest sidewalk shown,
detail at Northeast sidewalk similar

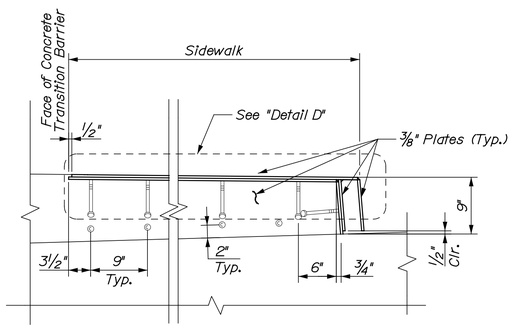

SECTION D-D

Section at Northeast sidewalk shown, section at Northwest sidewalk similar

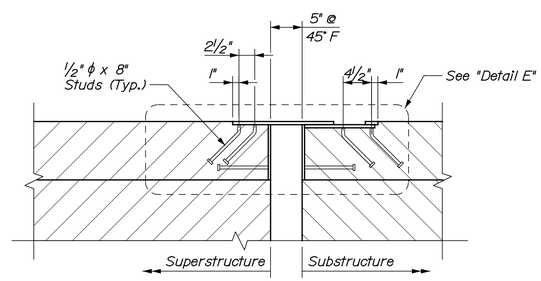

SECTION E-E

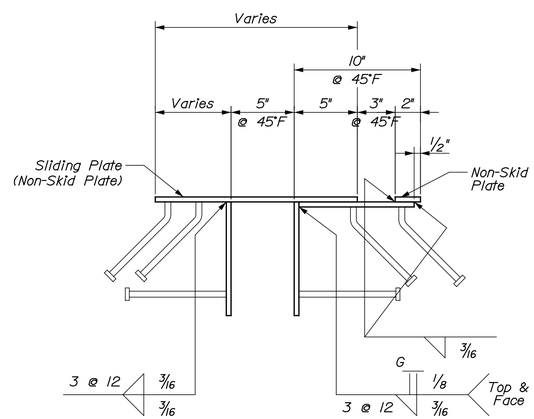

DETAIL "E"

All Plates ⅜" Thick

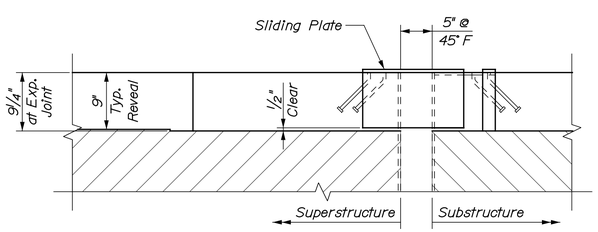

SIDEWALK EXPANSION DAM ELEVATION

Section at Northwest sidewalk shown, section at Northeest sidewalk similar

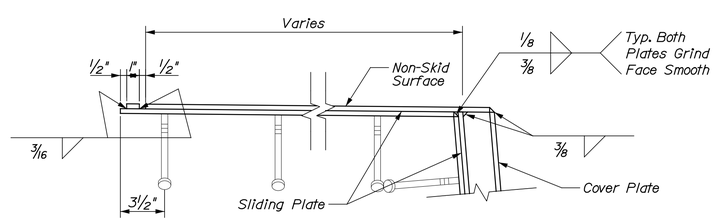

DETAIL "D"

All Plates ⅜" Thick

T·Y·LIN INTERNATIONAL

STATE OF MAINE
DEPARTMENT OF TRANSPORTATION

BRIDGE PLANS

WIN 16705.00

BRIDGE NO. 2660

PROJ. MANAGER	N.B.	BY	DATE
DESIGN-DETAILED	T.P.	SAM	.
CHECKED-REVIEWED			
DESIGN2-DETAILED2			
DESIGN3-DETAILED3			
REVISIONS 1			
REVISIONS 2			
REVISIONS 3			
REVISIONS 4			
FIELD CHANGES			

SIGNATURE

P.E. NUMBER

DATE

PENOBSCOT RIVER BRIDGE
PENOBSCOT RIVER
HOWLAND-ENFIELD PENOBSCOT COUNTY

EXPANSION DAM DETAILS 2

SHEET NUMBER
118
OF 127

Filename: ...\MSTA\XXX_Expansion_Dams 2.dgn Division: Username: Date:12/16/2014

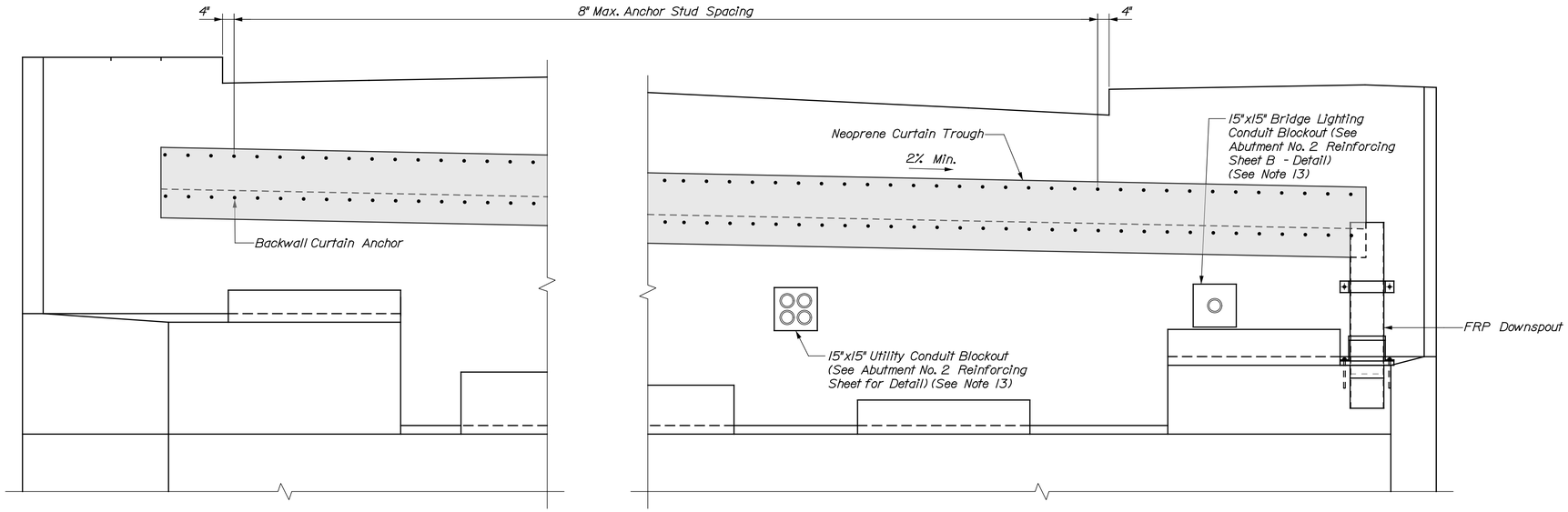

CURTAIN TROUGH ELEVATION

(Abut. 1 location shown; Abut. 2 simular)

Flow

CURTAIN TROUGH NOTES

1. Fabrication and materials for the curtain trough, including galvanization of steel components, shall be in accordance with the provisions of Standard Specifications Section 521, Finger Joint and Fabric Trough.
2. The neoprene sheets shall be fabricated in one piece with no seams.
3. Curtain troughs shall be installed no less than two days after the placement of concrete.
4. Payment for curtain plates will be considered incidental to Item No. 521.23, Expansion Device - Finger Joint.
5. Payment for curtain troughs (per each), including anchor bars and associated hardware, will be made under Item No. 521.32, Fabric Trough for Finger Joint.
6. Curtain plate and anchor bar shall be hot dipped galvanized to the requirements of AASHTO M111 (ASTM 123).

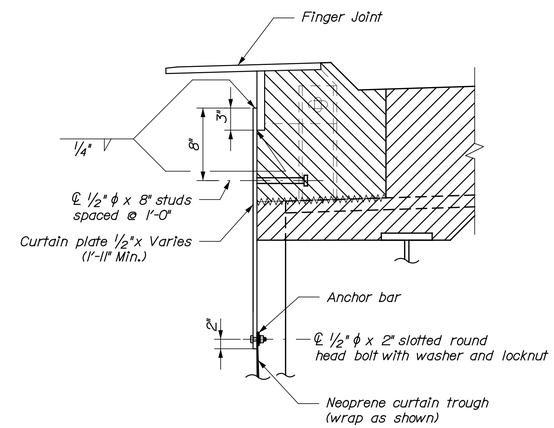

CURTAIN PLATE DETAIL AT EXPANSION JOINT

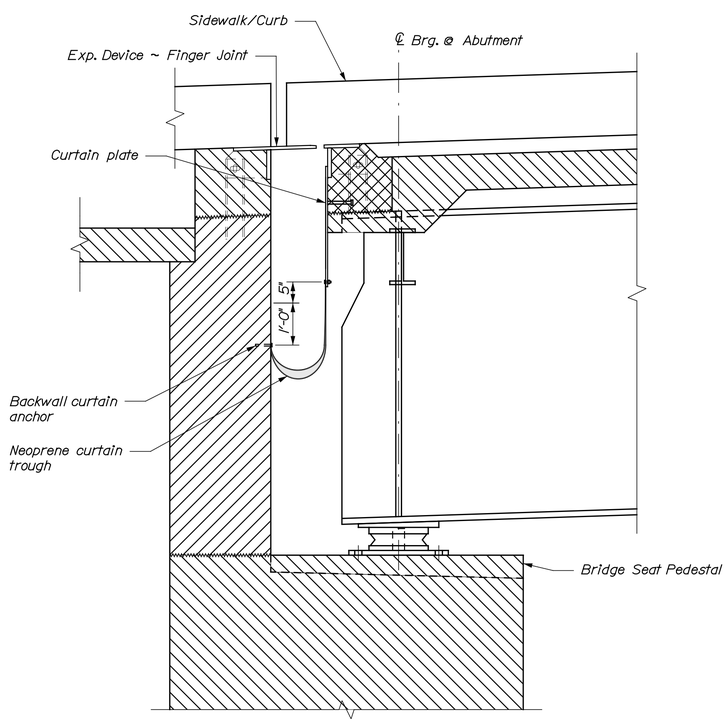

SECTION AT EXPANSION JOINT

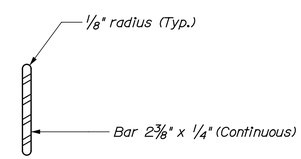

ANCHOR BAR

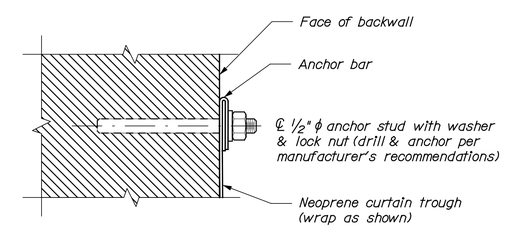

CURTAIN ANCHOR DETAIL

T·Y·LIN INTERNATIONAL

STATE OF MAINE
DEPARTMENT OF TRANSPORTATION

BRIDGE PLANS

WIN 16705.00

BRIDGE NO. 2660

	N.B.	BY	DATE
PROJ. MANAGER			
DESIGN-DETAILED	DSM	SAM	.
CHECKED-REVIEWED	RMH	RMH	.
DESIGN2-DETAILED2			
DESIGN3-DETAILED3			
REVISIONS 1			
REVISIONS 2			
REVISIONS 3			
REVISIONS 4			
FIELD CHANGES			

SIGNATURE

P.E. NUMBER

DATE

PENOBSCOT RIVER BRIDGE
PENOBSCOT RIVER
HOWLAND-ENFIELD PENOBSCOT COUNTY

CURTAIN TROUGH DETAILS 1

SHEET NUMBER
119
OF 127

Filename: ...\XXX_Curtain_Troughs_01.dgn Division: Username: Date:12/16/2014

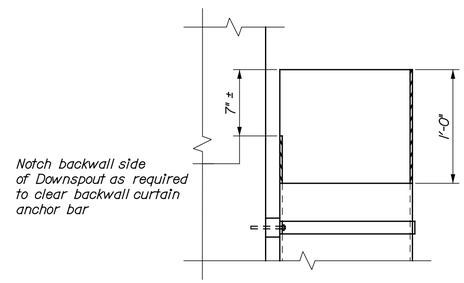

DOWNSPOUT CUTOUT FOR TROUGH - VIEW A-A

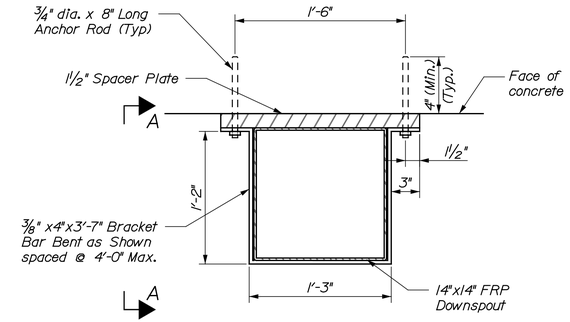

DOWNSPOUT ATTACHMENT BRACKET DETAIL

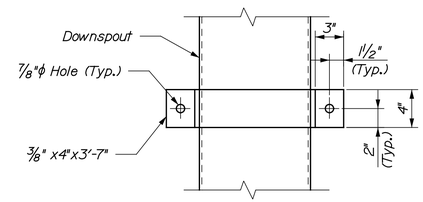

ELEVATION VIEW OF BRACKET

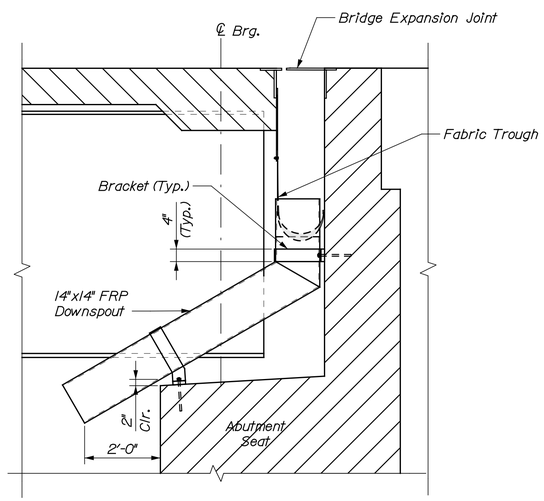

DOWNSPOUT ELEVATION AT ABUTMENT 2

DOWNSPOUT NOTES:

1. FRP Downspouts shall be designed and detailed based on the dimensions for the downspouts shown, and in accordance with Special Provisions Section 502, Fiber Reinforced Polymer Bridge Drains and Downspouts.
2. The exact position of the downspouts shall be determined in the field and shall be coordinated with Curtain Trough Details.
3. All plates and bars shall conform to AASHTO M270 Grade 36.
4. Brackets shall be galvanized in accordance with AASHTO M111 (ASTM 123) after fabrication.
5. All rods and related hardware shall be ASTM A307 and shall be galvanized in accordance with ASTM A153 (AASHTO M232).
6. Downspout and all anchor rods and related hardware shall be paid for under Item No. 502.703 FRP Downspout.
7. At the contractors option, alternate downspout details and locations may be submitted to the Resident for approval.

T·Y·LIN INTERNATIONAL

STATE OF MAINE
DEPARTMENT OF TRANSPORTATION

BRIDGE PLANS

WIN 16705.00

BRIDGE NO. 2660

		N.B.	BY	DATE
PROJ. MANAGER				
DESIGN-DETAILED	DSM		SAM	.
CHECKED-REVIEWED	RMH		RMH	.
DESIGN2-DETAILED2				
DESIGN3-DETAILED3				
REVISIONS 1				
REVISIONS 2				
REVISIONS 3				
REVISIONS 4				
FIELD CHANGES				

SIGNATURE

P.E. NUMBER

DATE

PENOBSCOT RIVER BRIDGE
PENOBSCOT RIVER
HOWLAND-ENFIELD PENOBSCOT COUNTY

CURTAIN TROUGH DETAILS 2

SHEET NUMBER
120
OF 127

Filename: ...\XXX_Curtain_Troughs_02.dgn Division: Username: Date:12/16/2014

STRAIGHT BARS

MARK	QTY.	LENGTH	LOCATION	MARK	QTY.	LENGTH	LOCATION
			Abutment No. 1				
A500	22	10'-0"	Footing Wingwall				
A501	56	32'-2"	Footing Abutment				
A502	22	20'-1"	Footing Wingwall				
A503	24	25'-7"	Footing Wingwall				
A504	19	18'-3"	Vertical Wingwall				
A505	41	17'-11"	Horizontal Wingwall				
A506	13	16'-4"	Vertical Wingwall				
A507	36	12'-0"	Horizontal Wingwall				
A508	2	8'-8"	Horizontal Wingwall				
A509	2	4'-2"	Horizontal Wingwall				
A510	2	12'-4"	Sloped Top Wingwall				
A511	22	36'-0"	Horizontal Backwall				
A512	22	29'-10"	Horizontal Backwall				
A513	2	29'-10"	Horizontal Backwall				
A514	2	3'-11"	Horizontal Backwall Lt. Side				
A515	2	8'-9"	Horizontal Backwall Rt. Side				
A516	27	11'-0"	Footing Wingwall				
A600	124	12'-4"	Footing Abutment				
A601	122	8'-4"	Vertical Stemwall				
A602	30	11'-7"	Vertical Stemwall				
A603	29	29'-6"	Horizontal Stemwall				
A604	29	32'-1"	Horizontal Stemwall				
A605	23	10'-7"	Vertical Stemwall				
A700	28	10'-0"	Footing Wingwall				
A701	37	18'-3"	Vertical Wingwall				
A702	17	16'-4"	Vertical Wingwall				
A900	36	11'-0"	Footing Wingwall				
			Abutment No. 2				
B500	39	10'-0"	Footing Wingwall				
B501	28	43'-2"	Footing Abutment				
B502	22	18'-9"	Footing Wingwall				
B503	22	18'-1"	Footing Wingwall				
B504	30	9'-10"	Horizontal Wingwall				
B505	11	14'-7"	Vertical Wingwall				
B506	32	10'-0"	Horizontal Wingwall				
B507	2	9'-7"	Horizontal Wingwall				
B508	2	4'-9"	Horizontal Wingwall				
B509	2	2'-4"	Horizontal Wingwall				
B510	2	10'-8"	Sloped Top Wingwall				
B511	2	9'-4"	Horizontal Wingwall				
B512	2	7'-0"	Horizontal Wingwall				
B513	2	4'-7"	Horizontal Wingwall				
B514	2	2'-3"	Horizontal Wingwall				
B515	2	10'-11"	Sloped Top Wingwall				
B516	44	27'-6"	Horizontal Stemwall				
B517	2	13'-0"	Horizontal Stemwall				
B518	2	20'-4"	Horizontal Stemwall				
B519	2	7'-7"	Horizontal Stemwall				
B520	2	10'-10"	Horizontal Stemwall				
B521	2	9'-3"	Horizontal Stemwall				
B522	11	13'-7"	Vertical Wingwall				
B523	2	7'-2"	Horizontal Wingwall				
B600	90	12'-4"	Footing Abutment				
B601	140	7'-10"	Vertical Stemwall				
B602	62	26'-10"	Horizontal Stemwall				
B700	51	10'-0"	Footing Wingwall				
B701	15	13'-7"	Vertical Wingwall				
B702	15	14'-7"	Vertical Wingwall				
MARK	QTY.	LENGTH	LOCATION	MARK	QTY.	LENGTH	LOCATION

BENT BARS

MARK	QTY.	LENGTH	TYPE	A	B	C	D	E	F	G	H	O	R	LOCATION
							Abutment No. 1							
A550	32	5'-11"	L	5'-1"	10"									Vertical Hook Footing
A551	24	6'-4"	S	0"	2'-4"	1'-8"	2'-4"			0"				Stirrup Curb
A552	13	12'-0"	S	0"	5'-2"	1'-8"	5'-2"			0"				Stirrup Top of Wall
A553	2	35'-2"	V				26'-8"	8'-6"			7"			Horizontal Top Backwall
A554	81	7'-8"	S	0"	10"	6'-0"	10"			0"				Stirrup Bridge Seat
A555	46	18'-2"	S	0"	8'-3"	1'-8"	8'-3"			0"				Stirrup Approach Seat
A556	21	13'-8"	S	0"	6'-0"	1'-8"	6'-0"			0"				Stirrup Approach Seat
A557	64	11'-10"	S	0"	5'-4"	1'-2"	5'-4"			0"				Stirrup Top Backwall
A558	49	11'-0"	S	0"	3'-2"	4'-8"	3'-2"			0"				Pedestals
A559	49	10'-0"	S	0"	3'-2"	3'-8"	3'-2"			0"				Pedestals
A560	16	8'-10"	V				5'-3"	3'-7"			2'-3½"			Horizontal Backwall Corner
A650	13	7'-4"	S	0"	2'-10"	1'-8"	2'-10"			0"				Stirrup Endpost
A651	175	6'-6"	L	5'-6"	1'-0"									Vertical Hook Footing
A652	5	13'-5"	S	1'-0"	6'-0"	3'-11"	6'-5"			0"				Horizontal Lt. Corner
A653	4	18'-11"	SC	1'-0"	6'-0"	6'-1"	5'-10"			0"		7'-5"		Horizontal Rt. Corner
A654	32	14'-6"	V				3'-7"	10'-11"			8'-5"			Horizontal Lt. Corner
A655	15	9'-2"	V				3'-7"	5'-7"			5'-5"			Horizontal Rt. Corner
A750	17	7'-2"	L	6'-0"	1'-2"									Vertical Hook Footing
A850	37	8'-11"	L	7'-7"	1'-4"									Vertical Hook Footing
							Abutment No. 2							
B550	22	5'-11"	L	5'-1"	10"									Vertical Hook
B551	22	14'-10"	S	0"	6'-7"	1'-8"	6'-7"			0"				Stirrup Top of Wall
B552	58	7'-8"	S	0"	10"	6'-0"	10"			0"				Stirrup Bridge Seat
B553	52	19'-0"	S	0"	8'-8"	1'-8"	8'-8"			0"				Stirrup Backwall
B554	52	10'-10"	S	0"	4'-10"	1'-2"	4'-10"			0"				Stirrup Backwall
B555	35	9'-8"	S	0"	3'-0"	3'-8"	3'-0"			0"				Pedestals
B556	35	10'-8"	S	0"	3'-0"	4'-8"	3'-0"			0"				Pedestals
B557	22	8'-0"	V				5'-5"	2'-7"			1'-8"			Horizontal Lt. Corner
B558	22	7'-7"	V				5'-0"	2'-7"			2'-0"			Horizontal Rt. Corner
B650	140	6'-6"	L	5'-6"	1'-0"									Footing Hook
B651	24	15'-0"	V				12'-5"	3'-7"			2'-4"			Horizontal Lt. Corner
B652	24	14'-5"	V				10'-10"	3'-7"			2'-9"			Horizontal Rt. Corner
B750	30	7'-2"	L	1'-2"	6'-0"									Vertical Hook
MARK	QTY.	LENGTH	TYPE	A	B	C	D	E	F	G	H	O	R	LOCATION

TYPE - BENDING DIAGRAMS

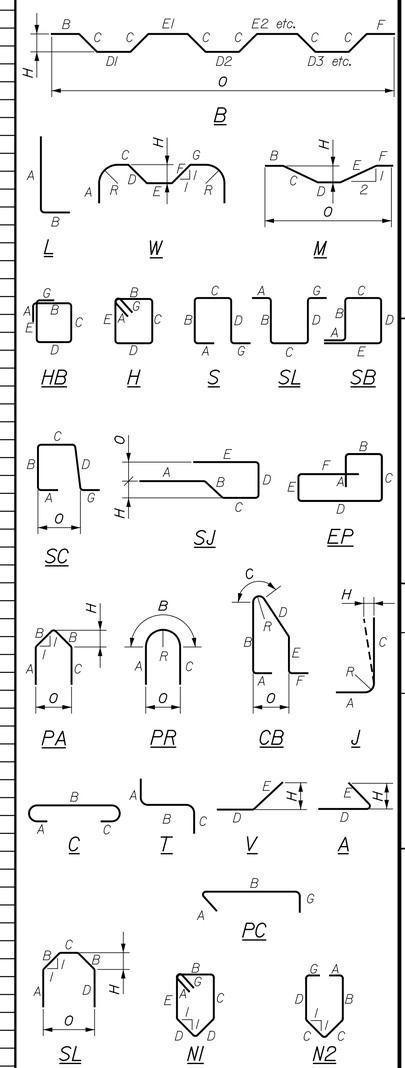

All dimensions are out-to-out of bar.

Bending details and hooks shall conform to the recommendations of the current revision of ACI Standard 315 and ACI Standard 318.

Reinforcing Bar: ASTM A615/A615M, Grade 60

GENERAL NOTES

1. The first two digits following the letter(s) of the mark indicate the size ofthe bar:

2. Mark 'A0502' = bar size #5
   Mark 'P0805' = bar size #8
   Mark 'S1150' = bar size #11

3. Each crank bar, Type B, may be replaced by two (2) straight bars (one top and one bottom) of the same bar size as the crank bar. Payment in either case shall be based on crank bars as schedule on the plans.

4. Bar marks ending with an 'E' indicate epoxy coating required.

   Bar marks with a 'G' indicate Glass Fiber Reinforced Polymer (GFRP) bars.

T·Y·LIN INTERNATIONAL

STATE OF MAINE
DEPARTMENT OF TRANSPORTATION

BRIDGE PLANS

WIN 16705.00

BRIDGE NO. 2660

PROJ. MANAGER			
DESIGN-DETAILED		SIGNATURE	
CHECKED-REVIEWED		P.E. NUMBER	
DESIGN2-DETAILED2		DATE	
DESIGN3-DETAILED3			
REVISIONS 1	DATE		
REVISIONS 2	BY		
REVISIONS 3	N.B.		
REVISIONS 4			
FIELD CHANGES			

PENOBSCOT RIVER BRIDGE
PENOBSCOT RIVER
HOWLAND-ENFIELD PENOBSCOT COUNTY

REINFORCING SCHEDULE 1

SHEET NUMBER

121

OF 127

Filename: ...\XXX_Reinforcing_Schedule_01.dgn Division: Username: Date:12/16/2014

STRAIGHT BARS

MARK	QTY.	LENGTH	LOCATION	MARK	QTY.	LENGTH	LOCATION
			Pier No.1				
1P500	47	11'-6"	Longitudinal - Footing				
1P501	13	45'-6"	Transverse - Footing				
1P502	3	38'-6"	Top - Pier				
1P700	13	45'-6"	Transverse - Footing				
1P900	15	3'-6"	Footing/Seal Dowels				
1P901	47	11'-6"	Longitudinal - Footing				
1P1000	88	31'-6"	Vertical - Pier				
			Pier No.2				
2P500	3	38'-6"	Top - Pier				
2P700	55	27'-6"	Longitudinal - Footing				
2P701	66	45'-6"	Transverse - Footing				
2P1000	102	19'-0"	Vertical - Pier				
2P1001	114	34'-3"	Vertical - Pier				
2P1100	92	27'-6"	Longitudinal - Footing				
			Pier No.3				
3P500	3	38'-6"	Top - Pier				
3P700	55	11'-6"	Longitudinal - Footing				
3P701	34	45'-6"	Transverse - Footing				
3P900	47	11'-6"	Longitudinal - Footing				
3P1000	88	36'-9"	Vertical - Pier				
			Superstructure Slab				
S500G	488	42'-6"	Longitudinal - Pour 1	S530G	273	47'-10"	Longitudinal - Curb/SW
S501G	876	47'-4"	Longitudinal - Pour 2	S531G	4	50'-0"	Longitudinal - Pour 1 Flare
S502G	876	46'-4"	Longitudinal - Pour 3	S532G	12	8'-2"	Transverse - End of Deck
S503G	780	47'-11"	Longitudinal - Pour 4	S533G	3	8'-6"	Transverse - End of Deck
S504G	6	40'-0"	Longitudinal - Pour 1 Flare	S534G	3	6'-2"	Transverse - End of Deck
S505G	2	36'-5"	Longitudinal - Pour 1 Flare	S535G	3	3'-7"	Transverse - End of Deck
S506G	2	23'-8"	Longitudinal - Pour 1 Flare	S536G	3	3'-2"	Transverse - End of Deck
S507G	2	13'-11"	Longitudinal - Pour 1 Flare	S537G	9	8'-4"	Transverse - End of Deck
S508G	2	42'-9"	Longitudinal - Pour 1 Flare	S538G	3	10'-9"	Transverse - End of Deck
S509G	2	37'-2"	Longitudinal - Pour 1 Flare	S539G	6	2'-7"	Transverse - End of Deck
S510G	2	32'-10"	Longitudinal - Pour 1 Flare				
S511G	2	29'-3"	Longitudinal - Pour 1 Flare	S600G	2058	34'-4"	Transverse - Top
S512G	2	26'-0"	Longitudinal - Pour 1 Flare	S601G	100	5'-6"	Transverse - Top Flare
S513G	2	23'-2"	Longitudinal - Pour 1 Flare	S602G	74	7'-5"	Transverse - Top Flare
S514G	2	20'-6"	Longitudinal - Pour 1 Flare	S603G	33	11'-3"	Transverse - Top Flare
S515G	2	18'-1"	Longitudinal - Pour 1 Flare	S604G	25	15'-1"	Transverse - Top Flare
S516G	2	15'-9"	Longitudinal - Pour 1 Flare	S605G	21	18'-11"	Transverse - Top Flare
S517G	2	13'-7"	Longitudinal - Pour 1 Flare	S606G	452	34'-4"	Transverse - Bottom
S518G	2	11'-6"	Longitudinal - Pour 1 Flare	S607G	288	4'-0"	Bridge Drain Detail
S519G	2	9'-6"	Longitudinal - Pour 1 Flare	S608G	144	7'-5"	Bridge Drain Detail
S520G	2	7'-8"	Longitudinal - Pour 1 Flare				
S521G	2	5'-10"	Longitudinal - Pour 1 Flare	S700G	452	34'-4"	Transverse - Top
S522G	2	4'-1"	Longitudinal - Pour 1 Flare				
S523G	2	2'-8"	Longitudinal - Pour 1 Flare				
S524G	2058	34'-4"	Transverse - Bottom				
S525G	100	5'-6"	Transverse - Bottom Flare				
S526G	74	7'-5"	Transverse - Bottom Flare				
S527G	33	11'-3"	Transverse - Bottom Flare				
S528G	25	15'-1"	Transverse - Bottom Flare				
S529G	21	18'-11"	Transverse - Bottom Flare				
			Approach Slab No.1				
1AS501	16	30'-0"	Transverse				
1AS502	16	30'-8"	Transverse				
1AS601	119	15'-0"	Longitudinal				
			Approach Slab No.2				
2AS501	16	28'-11"	Transverse				
2AS601	59	15'-0"	Longitudinal				
MARK	QTY.	LENGTH	LOCATION	MARK	QTY.	LENGTH	LOCATION

BENT BARS

MARK	QTY.	LENGTH	TYPE	A	B	C	D	E	F	G	H	O	R	LOCATION
						Pier No. 1								
1P550	26	39'-3"	N1	5½"	3'-6"	15'-0"	2'-5"	15'-0"		5½"	1'-9"			Horizontal - Pier Nose
1P551	52	37'-11"	H	5½"	3'-6"	15'-0"	3'-6"	15'-0"		5½"				Horizontal - Pier
1P552	1144	4'-6½"	PC	5½"	3'-7"					6"				Horizontal - Pier Crossties
1P553	26	35'-10"	N2	6"	15'-0"	2'-5"	15'-0"			6"				Horizontal - Pier Nose
1P554	52	34'-6"	HB	6"	15'-0"	3'-6"	15'-0"	6"		0"				Horizontal - Pier
1P555	40	7'-8"	S	0"	2'-2"	3'-4"	2'-2"			0"				Top - Pier
1P556	40	9'-2"	S	0"	3'-1"	3'-0"	3'-1"			0"				Longitudinal - Pedestal
1P557	35	9'-8"	S	0"	3'-1"	3'-6"	3'-1"			0"				Transverse - Pedestal
1P1050	164	13'-6"	L	11'-8"	1'-10"									Pier/Footing Dowels
						Pier No. 2								
2P550	56	6'-6"	S	0"	1'-0"	4'-6"	1'-0"			0"				Footing Stirrups
2P551	26	39'-3"	N1	5½"	3'-6"	15'-0"	2'-5"	15'-0"		5½"	1'-9"			Horizontal - Pier Nose
2P552	52	37'-11"	H	5½"	3'-6"	15'-0"	3'-6"	15'-0"						Horizontal - Pier
2P553	1171	4'-6½"	PC	5½"	3'-7"					6"				Horizontal - Pier Crossties
2P554	29	35'-10"	N2	6"	15'-0"	2'-5"	15'-0"			6"				Horizontal - Pier Nose
2P555	58	34'-6"	HB	6"	15'-0"	3'-6"	15'-0"	6"		0"				Horizontal - Pier
2P556	40	7'-8"	S	0"	2'-2"	3'-4"	2'-2"			0"				Top - Pier
2P557	40	9'-2"	S	0"	3'-1"	3'-0"	3'-1"			0"				Longitudinal - Pedestal
2P558	35	9'-8"	S	0"	3'-1"	3'-6"	3'-1"			0"				Transverse - Pedestal
2P1150	216	14'-9"	L	12'-9"	2'-0"									Pier/Footing Dowels
						Pier No. 3								
3P550	44	6'-6"	S	0"	1'-0"	4'-6"	1'-0"			0"				Footing Stirrups
3P551	26	39'-3"	N1	5½"	3'-6"	15'-0"	2'-5"	15'-0"		5½"	1'-9"			Horizontal - Pier Nose
3P552	52	37'-11"	H	5½"	3'-6"	15'-0"	3'-6"	15'-0"						Horizontal - Pier
3P553	1189	4'-6½"	PC	5½"	3'-7"					6"				Horizontal - Pier Crossties
3P554	31	35'-10"	N2	6"	15'-0"	2'-5"	15'-0"			6"				Horizontal - Pier Nose
3P555	62	34'-6"	HB	6"	15'-0"	3'-6"	15'-0"	6"		0"				Horizontal - Pier
3P556	40	7'-8"	S	0"	2'-2"	3'-4"	2'-2"			0"				Top - Pier
3P557	40	9'-2"	S	0"	3'-1"	3'-0"	3'-1"			0"				Longitudinal - Pedestal
3P558	35	9'-8"	S	0"	3'-1"	3'-6"	3'-1"			0"				Transverse - Pedestal
3P1050	164	15'-7"	L	13'-9"	1'-10"									Pier/Footing Dowels
						Superstructure Slab								
S550E	105	5'-1"	SJ	10"	15"	14"	12"	10"						End of Deck Stirrup
S551E	26	6'-8"	S	0"	3'-0"	8"	3'-0"			0"				End of Curb/SW Stirrup
S552G	153	11'-8"	V				4'-3"	7'-5"			6"			Transverse - Bottom
S553G	409	9'-2"	V				3'-8"	5'-6"			4"			Transverse - Bottom
S554G	1497	9'-2"	V				3'-8"	5'-6"			3"			Transverse - Bottom
S555G	320	10'-8"	V				5'-2"	5'-6"			4"			Transverse - Bottom
S556G	132	12'-2"	V				6'-8"	5'-6"			4"			Transverse - Bottom
S557E	783	12'-7"	S	10"	1'-7"	8'-1"	1'-4"			10"				Transverse - Sidewalk
S558E	172	9'-0"	T	6'-10"	1'-2"	10"								Transverse - Sidewalk
S559E	172	9'-3"	S	0"	6'-10"	1'-7"	10"			0"				Transverse - Sidewalk
S560E	360	6'-2"	S	10"	1'-7"	1'-4"	1'-7"			10"				Transverse - Sidewalk
S561E	1297	6'-0"	S	10"	1'-7"	1'-2"	1'-7"			10"				Transverse - Curb
S562E	1	11'-8"	HB	0"	10"	9"	8'-1"	1'-2"		10"				Transverse - Sidewalk
S563E	1	14'-2"	HB	0"	10"	9"	10'-7"	1'-2"		10"				Transverse - Sidewalk
S564E	21	6'-11"	S	0"	2'-8"	1'-7"	2'-8"			0"				Luminaire Corbel
S565E	21	7'-8"	SL	1'-8"	1'-8"	1'-0"	1'-8"				1'-2"			Luminaire Corbel
S650G	153	11'-8"	V				4'-3"	7'-5"			6"			Transverse - Top
S651G	409	9'-2"	V				3'-8"	5'-6"			4"			Transverse - Top
S652G	1497	9'-2"	V				3'-8"	5'-6"			3"			Transverse - Top
S653G	320	10'-8"	V				5'-2"	5'-6"			4"			Transverse - Top
S654G	132	12'-2"	V				6'-8"	5'-6"			4"			Transverse - Top
S655E	7	5'-0"	H	8"	1'-1"	9"	1'-1"	9"		8"				Transverse - Curb
S656E	23	6'-4"	S	1'-0"	1'-7"	1'-2"	1'-7"			1'-0"				Transverse - Curb/SW
MARK	QTY.	LENGTH	TYPE	A	B	C	D	E	F	G	H	O	R	LOCATION

TYPE - BENDING DIAGRAMS

All dimensions are out-to-out of bar.

Bending details and hooks shall conform to the recommendations of the current revision of ACI Standard 315 and ACI Standard 318.

Reinforcing Bar: ASTM A615/A615M, Grade 60

GENERAL NOTES

1. The first two digits following the letter(s) of the mark indicate the size of the bar:

2. Mark 'A0502' = bar size #5
   Mark 'P0805' = bar size #8
   Mark 'S1150' = bar size #11

3. Each crank bar, Type B, may be replaced by two (2) straight bars (one top and one bottom) of the same bar size as the crank bar. Payment in either case shall be based on crank bars as schedule on the plans.

4. Bar marks ending with an 'E' indicate epoxy coating required.

   Bar marks with a 'G' indicate Glass Fiber Reinforced Polymer (GFRP) bars.

T·Y·LIN INTERNATIONAL

STATE OF MAINE
DEPARTMENT OF TRANSPORTATION

BRIDGE PLANS

WIN 16705.00

BRIDGE NO. 2660

		SIGNATURE	DATE
PROJ. MANAGER			
DESIGN-DETAILED			
CHECKED-REVIEWED			
DESIGN2-DETAILED2			
DESIGN3-DETAILED3			
REVISIONS 1			
REVISIONS 2			
REVISIONS 3			
REVISIONS 4			
FIELD CHANGES			

P.E. NUMBER

PENOBSCOT RIVER BRIDGE
PENOBSCOT RIVER
HOWLAND-ENFIELD PENOBSCOT COUNTY

REINFORCING SCHEDULE 2

SHEET NUMBER
122
OF 127

Date:12/16/2014
Username:
Division:
Filename: ...\XXX_Reinforcing_Schedule_01.dgn

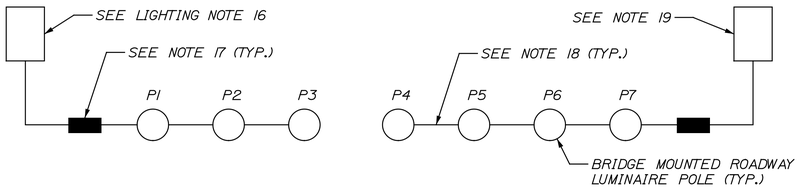

LIGHTING CIRCUIT DIAGRAM

NOT TO SCALE

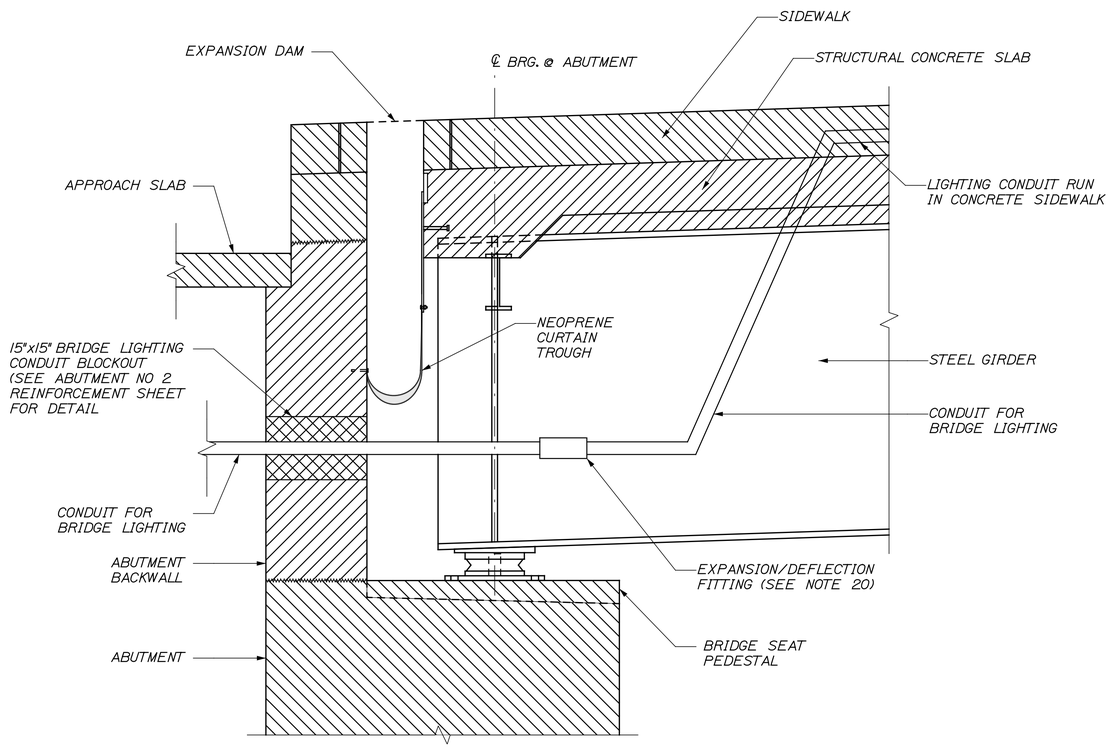

BRIDGE LIGHTING CONDUIT DETAIL AT ABUTMENT

NOT TO SCALE

LIGHTING NOTES:

1. PRIOR TO THE START OF CONSTRUCTION THE CONTRACTOR SHALL CONTACT DIG SAFE TO LOCATE ALL EXISTING UNDERGROUND UTILITIES WITHIN THE WORK AREA AND TAKE ALL NECESSARY PRECAUTIONS FOR PROTECTION OF THESE UTILITIES.
2. ALL MATERIALS AND WORKMANSHIP SHALL CONFORM TO THE CURRENT EDITION OF THE NATIONAL ELECTRICAL CODE (NEC), TOWN OF HOWLAND AND ENFIELD REQUIREMENTS (AS APPLICABLE) AND MOST RECENT MAINE DEPT. OF TRANSPORTATION (MEDOT) SPECIFICATIONS FOR MISCELLANEOUS CONSTRUCTION, SECTION 634- HIGHWAY LIGHTING AND STANDARD DETAILS FOR DIVISION 600 MISCELLANEOUS CONTRUCTION UNLESS NOTED OTHERWISE.
3. ALL LIGHT POLES SHALL BE MOUNTED ON CONCRETE CORBELS AT STRUCTURE EDGE. SEE STRUCTURE PLANS AND DETAILS.
4. THE CONTRACTOR SHALL FIELD VERIFY ELECTRIC SERVICE POLE LOCATIONS TO AVOID SUB-SURFACE UTILITIES, NATURAL AND BUILT SITE FEATURES SUCH AS BUT NOT LIMITED TO SIDEWALKS, DRAINAGE STRUCTURES, GUARD RAILS, SWALES AND SUCH FEATURES THAT WOULD INTERFERE WITH THE PROPER INSTALLATION OF POLES. THE CONTRACTOR SHALL VISIT THE SITE PRIOR TO BIDDING TO ENSURE THAT THEY ARE FULLY AWARE OF THE SITE CONDITIONS WHICH MAY AFFECT THEIR MEANS AND METHODS OF CONSTRUCTION.
5. IF CONDUIT IS RUN UNDER EXISTING PAVEMENT WHICH IS TO REMAIN IN PLACE, THE CONTRACTOR SHALL UTILIZE THE DIRECTIONAL BORING OR JACKING METHOD FOR CONDUIT INSTALLATION TO AVOID DESTURBING EXISTING PAVEMENT.
6. WHERE LIGHTING CONDUIT IS REQUIRED TO PASS OVER DRAINAGE CULVERTS AND THE SPECIFIED BURIAL DEPTH OF CONDUIT CANNOT BE MAINTAINED THE CONTRACTOR SHALL PROVIDE CONCRETE PROTECTION OF CONDUIT IN ACCORDANCE WITH NEC TABLE 300.5.
7. IN GENERAL THE SCOPE OF WORK WILL INCLUDE THE INSTALLATION OF A COMPLETE LIGHTING SYSTEM INCLUDING ELECTRIC SERVICE(S); CONDUIT; EXPANSION/DEFLECTION FITTINGS; CONDUCTORS; HANDHOLES (WHERE REQUIRED) LIGHTING STANDARDS; LUMINAIRES AND REQUIRED MISCELANOUS/INCIDENTIAL MATERIALS.
8. THE CONTRACTOR WILL COORDINATE THIS WORK WITH ALL OTHER CONTRACTORS AND UTILITY COMPANIES WORKING ON THIS PROJECT.
9. INSTALLATION OF ALL UNDERGROUND CONDUITS WILL COMPLY WITH MAINE DOT STANDARD DETAIL 626 (07).
10. ANCHOR BOLTS SHALL BE HOT DIP GALVANIZED, DIAMETER AND LENGTH AS RECOMMENDED AND SUPPLIED BY POLE MANUFACTURER.
11. AT EACH POLE HAND HOLE PROVIDE A TWO-POLE FUSE HOLDER WITH TWO 5 AMPERE, 250 VOLT FUSES TO ISOLATE A FAULTY LUMINAIRE FROM THE RESPECTIVE LIGHTING CIRCUIT. FUSE HOLDER SHALL BE BUSSMAN HEY SERIES WITH INSULATING BOOTS.
12. ROADWAY LUMINAIRE AEL ATBO-30B-LED-E-MVOLT-R2-BL-NR MOUNTED ON 25 (NOMINAL) FT. RTA POLE AEL RTA2560E WITH 24 INCH STRAIGHT ARM, TYPICAL FOR SEVEN LOCATIONS. POLE HEIGHT (25 FT.) IS NOMINAL. EXACT POLE DIMENSION SHALL RESULT IN A LUMINAIRE MOUNTING HEIGHT OF 25 FEET ABOVE WALKWAY SURFACE.
13. MOUNT POLES ALONG NORTH SIDE OF STRUCTURE UTILIZING NEW LIGHT POLE CORBELS.
14. POLES P1 THROUGH P3 CONNECTED TO TOWN OF HOWLAND ELECTRIC SERVICE.
15. POLES P4 THROUGH P7 CONNECTED TO TOWN OF ENFIELD ELECTRIC SERVICE.
16. HOWLAND LIGHTING SERVICE 120/240 V, SINGLE PHASE, 3-WIRE, 50 AMPERE.
17. EXPANSION/DEFLECTION FITTING OZ/GEDNEY TYPE AXDX.
18. 2-INCH CONDUIT, (2) #8 AWG CU TYPE XHHW & (1) #8 AWG CU XHHW GROUND.
19. ENFIELD LIGHTING SERVICE 120/240 V, SINGLE PHASE, 3-WIRE, 50 AMPERE.
20. AT CONTRACTORS OPTION, A LENGTH OF LIQUID TIGHT FLEXIBLE METAL CONDUIT MAY BE UTILIZED PROVIDED THAT LENGTH AND ARRANGEMENT IS SUCH THAT IT ALLOWS THE MAXIMUM ANTICIPATED EXPANSION AND DEFLECTION AT THE POINT OF INSTALLATION.

T·Y·LIN INTERNATIONAL

STATE OF MAINE
DEPARTMENT OF TRANSPORTATION

BRIDGE PLANS

WIN 16705.00

BRIDGE NO. 2660

	N.B	BY	DATE
PROJ. MANAGER			
DESIGN-DETAILED			
CHECKED-REVIEWED			
DESIGN2-DETAILED2			
DESIGN3-DETAILED3			
REVISIONS 1			
REVISIONS 2			
REVISIONS 3			
REVISIONS 4			
FIELD CHANGES			

SIGNATURE

P.E. NUMBER

DATE

PENOBSCOT RIVER BRIDGE
PENOBSCOT RIVER
HOWLAND-ENFIELD PENOBSCOT COUNTY

LIGHTING DETAILS & NOTES

SHEET NUMBER
123
OF 127

Filename: ...\MSTA\Lighting_Detail_001.dgn Division: Username: Date:12/16/2014

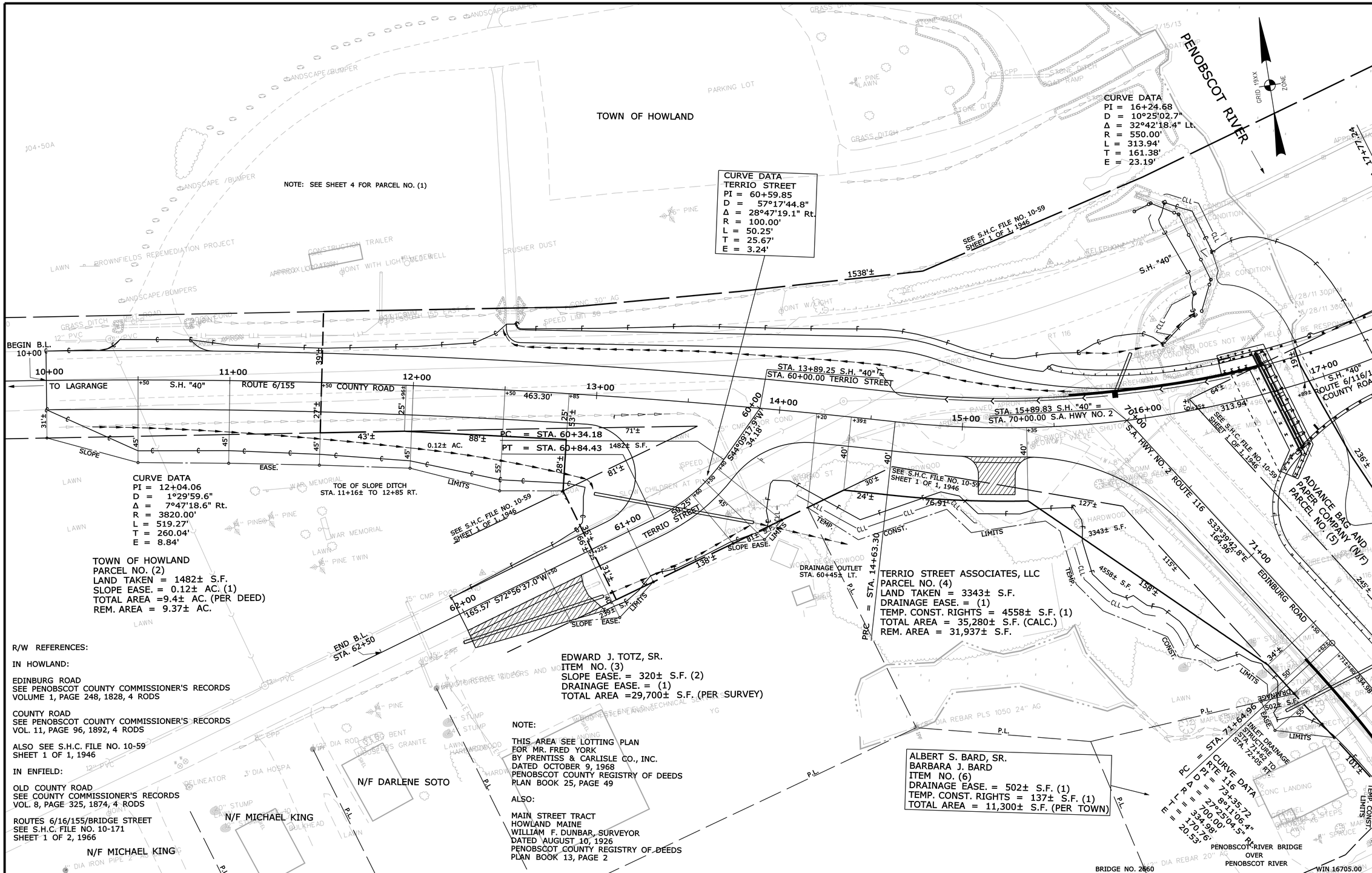

R/W REFERENCES:

IN HOWLAND:

EDINBURG ROAD
SEE PENOBSCOT COUNTY COMMISSIONER'S RECORDS
VOLUME 1, PAGE 248, 1828, 4 RODS

COUNTY ROAD
SEE PENOBSCOT COUNTY COMMISSIONER'S RECORDS
VOL. 11, PAGE 96, 1892, 4 RODS

ALSO SEE S.H.C. FILE NO. 10-59
SHEET 1 OF 1, 1946

IN ENFIELD:

OLD COUNTY ROAD
SEE COUNTY COMMISSIONER'S RECORDS
VOL. 8, PAGE 325, 1874, 4 RODS

ROUTES 6/16/155/BRIDGE STREET
SEE S.H.C. FILE NO. 10-171
SHEET 1 OF 2, 1966

SYMBOLS

- IP or ⊕ IPF (IRON PIPE or PIN FOUND)
- ST. (SEPTIC TANK)
- ⊕BM (TRAVERSE POINT)
- (WELL)
- GRADING LIMIT LINE
- CONSTRUCTION LIMIT LINE
- PROPERTY LINE
- LIMITS OF ROW (RIGHT PORTION (L.O.W.P.)
- EXISTING RIGHT OF WAY
- NEW RIGHT OF WAY
- NEW ROW WITHIN EXIST. ROW
- CONTROL OF ACCESS
- WATER LINE
- GAS LINE
- ELECTRIC LINE
- TELEPHONE LINE
- SEWER LINE

ITEM	TECH	CHECKED
BASE MAP		
EXIST. R/W	VDP/BDM	
PROP. LINES	BDM	
AREAS	BDM	

STATE OF MAINE
DEPARTMENT OF TRANSPORTATION
16 STATE HOUSE STATION - AUGUSTA, ME 04333-0016

HOWLAND
RIGHT OF WAY MAP

REVISIONS

NO.	DATE	DESCRIPTION	BY

PLAN FILED IN PLAN BOOK	PAGE	COUNTY RECORD			
NO.	GRANTOR	INSTRUMENT	DATE	BOOK	PAGE

DAVID BERNHARDT
COMMISSIONER
JOYCE NOEL TAYLOR
CHIEF ENGINEER

DATE

STATE HIGHWAY "40"
RTE. 6/116/155 COUNTY ROAD
HOWLAND PENOBSCOT COUNTY
FEDERAL AID PROJECT NO. BH-1670(500)X PART II

SEPTEMBER 2014	RIGHT-OF-WAY MAP	D.O.T. FILE NO. 10-489
SCALE 1" = 25'	SHEET 1 OF 4	

SHEET NUMBER
124
OF 127

Filename: ...\00\ROW\MSTA\001_RWPLAN1.dgn Division: BRIDGE Username: David.Show Date:12/22/2014

Filename: ...\00\row\msta\002_RWPLAN2.dgn Division: BRIDGE Username: David.Show Date:12/22/2014

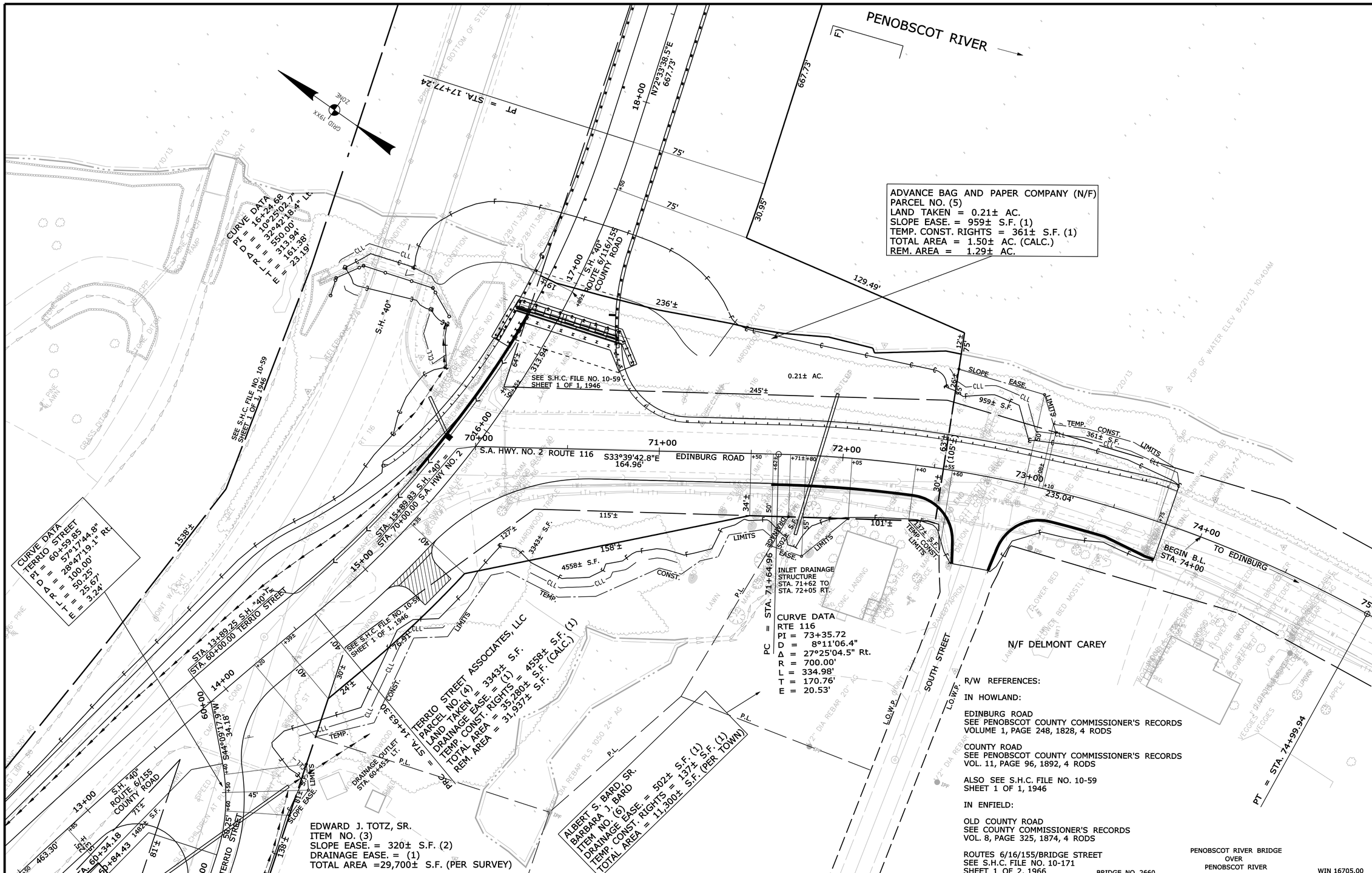

R/W REFERENCES:

IN HOWLAND:

EDINBURG ROAD
SEE PENOBSCOT COUNTY COMMISSIONER'S RECORDS
VOLUME 1, PAGE 248, 1828, 4 RODS

COUNTY ROAD
SEE PENOBSCOT COUNTY COMMISSIONER'S RECORDS
VOL. 11, PAGE 96, 1892, 4 RODS

ALSO SEE S.H.C. FILE NO. 10-59
SHEET 1 OF 1, 1946

IN ENFIELD:

OLD COUNTY ROAD
SEE COUNTY COMMISSIONER'S RECORDS
VOL. 8, PAGE 325, 1874, 4 RODS

ROUTES 6/16/155/BRIDGE STREET
SEE S.H.C. FILE NO. 10-171
SHEET 1 OF 2, 1966

BRIDGE NO. 2660

PENOBSCOT RIVER BRIDGE
OVER
PENOBSCOT RIVER

WIN 16705.00

SYMBOLS

- IP or ● IPF (IRON PIPE or PIN FOUND)
- ST. (SEPTIC TANK)
- (ROW MONUMENT)
- (TRAVERSE POINT)
- (WELL)
- GRADING LIMIT LINE
- CONSTRUCTION LIMIT LINE
- PROPERTY LINE
- LIMITS OF "RIGHT PORTION (L.O.W.P.)
- WATER LINE
- GAS LINE
- ELECTRIC LINE
- TELEPHONE LINE
- SEWER LINE
- NEW RIGHT OF WAY
- NEW ROW WITHIN EXIST. ROW
- CONTROL OF ACCESS

ITEM	TECH	CHECKED
BASE MAP		
EXIST. R/W	VDP/BDM	
PROP. LINES	BDM	
AREAS	BDM	

STATE OF MAINE
DEPARTMENT OF TRANSPORTATION
16 STATE HOUSE STATION - AUGUSTA, ME 04333-0016

HOWLAND
RIGHT OF WAY MAP

REVISIONS			
NO.	DATE	DESCRIPTION	BY

PLAN FILED IN PLAN BOOK			PAGE		COUNTY RECORD		
NO.	GRANTOR		INSTRUMENT		DATE	BOOK	PAGE

DAVID BERNHARDT
COMMISSIONER
JOYCE NOEL TAYLOR
CHIEF ENGINEER

DATE

STATE HIGHWAY "40"
RTE. 6/116/155 COUNTY ROAD
HOWLAND PENOBSCOT COUNTY
FEDERAL AID PROJECT NO. BH-1670(500)X PART II

SEPTEMBER 2014	RIGHT-OF-WAY MAP	D.O.T. FILE NO. 10-489
SCALE 1" = 25'	SHEET 2 OF 4	

SHEET NUMBER
125
OF 127

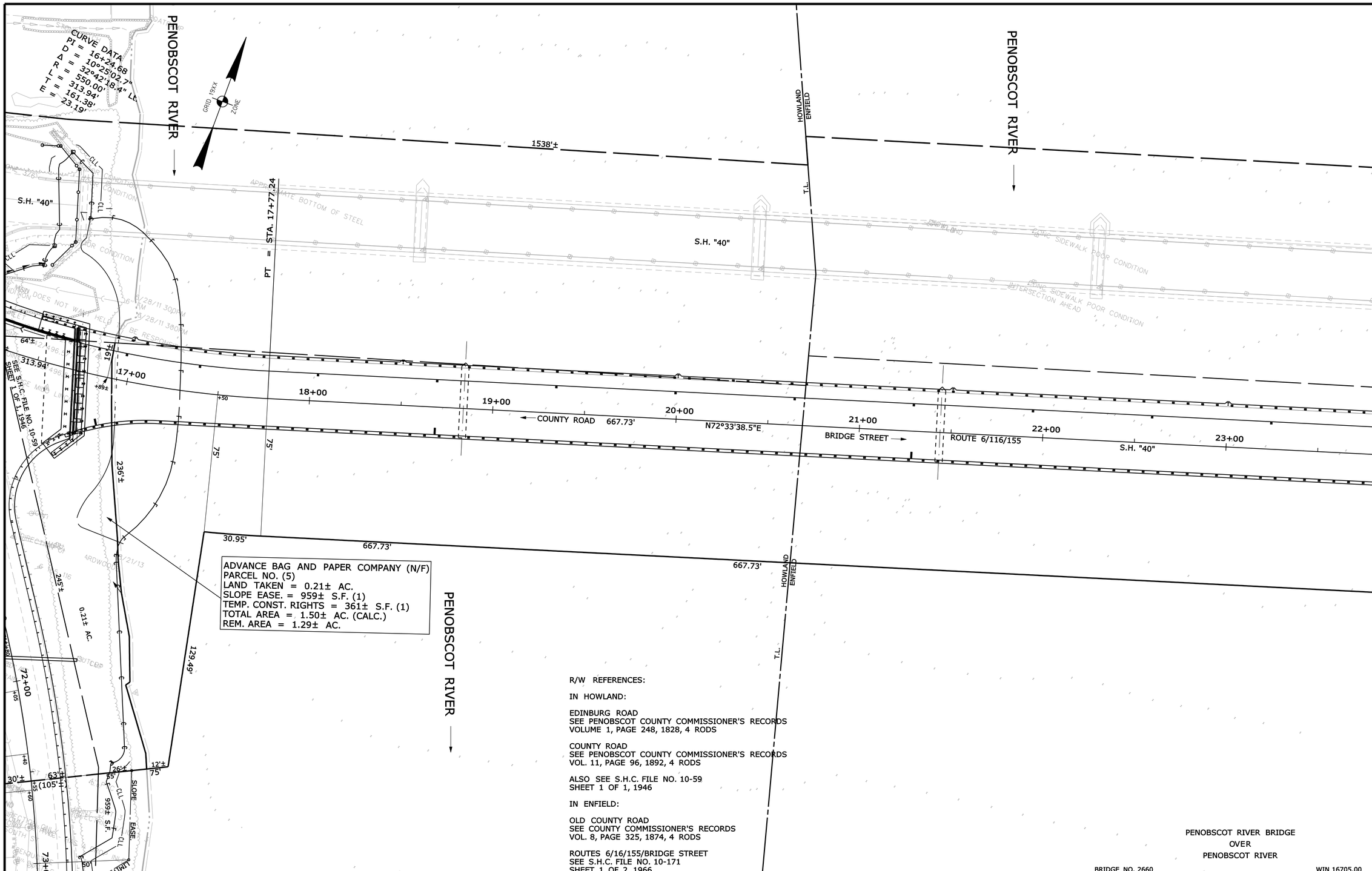

R/W REFERENCES:

IN HOWLAND:

EDINBURG ROAD
SEE PENOBSCOT COUNTY COMMISSIONER'S RECORDS
VOLUME 1, PAGE 248, 1828, 4 RODS

COUNTY ROAD
SEE PENOBSCOT COUNTY COMMISSIONER'S RECORDS
VOL. 11, PAGE 96, 1892, 4 RODS

ALSO SEE S.H.C. FILE NO. 10-59
SHEET 1 OF 1, 1946

IN ENFIELD:

OLD COUNTY ROAD
SEE COUNTY COMMISSIONER'S RECORDS
VOL. 8, PAGE 325, 1874, 4 RODS

ROUTES 6/16/155/BRIDGE STREET
SEE S.H.C. FILE NO. 10-171
SHEET 1 OF 2, 1966

PENOBSCOT RIVER BRIDGE
OVER
PENOBSCOT RIVER

BRIDGE NO. 2660 WIN 16705.00

SYMBOLS

- IP or IPF (IRON PIPE or PIN FOUND)
- ST. (SEPTIC TANK)
- BM (TRAVERSE POINT)
- (ROW MONUMENT)
- WELL (WELL)
- GRADING LIMIT LINE
- CONSTRUCTION LIMIT LINE
- PROPERTY LINE
- LIMITS OF WRO RIGHT OF WAY (L.O.W.R.)
- EXISTING RIGHT OF WAY
- NEW RIGHT OF WAY
- NEW ROW WITHIN EXIST. ROW
- CONTROL OF ACCESS
- WATER LINE
- GAS LINE
- ELECTRIC LINE
- TELEPHONE LINE
- SEWER LINE

ITEM	TECH	CHECKED
BASE MAP		
EXIST. R/W	VDP/ BDM	
PROP. LINES	BDM	
AREAS	BDM	

STATE OF MAINE
DEPARTMENT OF TRANSPORTATION
16 STATE HOUSE STATION - AUGUSTA, ME 04333-0016

HOWLAND / ENFIELD
RIGHT OF WAY MAP

REVISIONS

NO.	DATE	DESCRIPTION	BY

PLAN FILED IN PLAN BOOK PAGE COUNTY RECORD

NO.	GRANTOR	INSTRUMENT	DATE	BOOK	PAGE

DAVID BERNHARDT
COMMISSIONER
JOYCE NOEL TAYLOR
CHIEF ENGINEER

DATE

STATE HIGHWAY "40"
RTE. 6/116/155 COUNTY ROAD BRIDGE STREET
HOWLAND / ENFIELD PENOBSCOT COUNTY
FEDERAL AID PROJECT NO. BH-1670(500)X PART II

SEPTEMBER 2014 | RIGHT-OF-WAY MAP | D.O.T. FILE NO. 10-489
SCALE 1" = 25' | SHEET 3 OF 4

SHEET NUMBER
126
OF 127

Filename: ...\00\row\msta\003_RWPLAN3.dgn Division: BRIDGE Username: David.Show Date:12/22/2014

THIS PLAN WAS PREPARED IN CONNECTION WITH THE DEPARTMENT'S ACQUISITION OF REAL PROPERTY FOR TRANSPORTATION PURPOSES. IT CANNOT BE USED TO ESTABLISH LEGAL BOUNDARIES BETWEEN ABUTTING PROPERTY OWNERS.

GRID 19XX ZONE

CURVE DATA
PI = 25+62.94
D = 5°43'46.5"
Δ = 13°27'24.0" Lt.
R = 1000.00'
L = 234.86'
T = 117.97'
E = 6.93'

EMERA MAINE
F/K/A BANGOR HYDRO-ELECTRIC COMPANY
PARCEL NO. (7)
LAND TAKEN = 1838± S.F. (CALC.) (ENTIRE LOT)

NOTE: ENTIRE AREA OF PARCEL NO. (7) IS SUBJECT TO SLOPE EASE. GRANTED TO STATE OF MAINE AS CONSTRUCTED UNDER FEDERAL AID PROJ. S-274(9) 1946 SEE EASE. RECORDED PENOBSCOT COUNTY REGISTRY OF DEEDS BK. 1288, PG. 14 S.H.C. FILE NO. 10-59

N/F
PAUL P. LEE
PHILOMENA LEE

N/F
ROSCOE LEE, JR.

N/F
ROSCOE LEE, JR.

EXISTING DRAINAGE EASEMENTS
SEE S.H.C. FILE NO. 10-171
SHEET 1 OF 2, 1966

EXISTING CLEAR SIGHT EASE.
SEE S.H.C. FILE NO. 10-171
SHEET 1 OF 2, 1966

CLEAR SIGHT EASE LIMITS

ANDRE E. CUSHING
GWEN A. CUSHING
PARCEL NO. (10)
LAND TAKEN = 1455± S.F. (2)
TEMP. CONST. RIGHTS = 3234± S.F. (2)
TOTAL AREA = 10,890± S.F. (PER TOWN)
REM. AREA = 9435± S.F.

THOMAS D. PREBLE
PARCEL NO. (9)
LAND TAKEN = 44± S.F.
TEMP. CONST. RIGHTS = 301± S.F. (1)
TOTAL AREA = 850± S.F. (PER DEED)
REM. AREA = 806± S.F.

VANESSA BRUCE
PARCEL NO. (11)
LAND TAKEN = 221± S.F.
TOTAL AREA = 1.25± AC. (PER TOWN)
REM. AREA = 1.24± AC.

CURVE DATA
PI = 28+22.68
D = 1°54'35.5"
Δ = 5°27'08.6" Rt.
R = 3000.00'
L = 285.49'
T = 142.85'
E = 3.40'

HUGH A. HUSSEY
PARCEL NO. (8)
LAND TAKEN = 122± S.F.
TEMP. CONST. RIGHTS = 1138± S.F. (1)
TOTAL AREA = 28,900± S.F. (PER DEED)
REM. AREA = 28,778± S.F.

N/F THOMPSON'S HARDWARE, INC.

CLIFTON L. TASH, JR.
HOLLY J. TASH
PARCEL NO. (1)
LAND TAKEN = 0.61±AC. (CALC.)(ENTIRE LOT)
BUILDINGS = (3)

R/W REFERENCES:

IN HOWLAND:

EDINBURG ROAD
SEE PENOBSCOT COUNTY COMMISSIONER'S RECORDS
VOLUME 1, PAGE 248, 1828, 4 RODS

COUNTY ROAD
SEE PENOBSCOT COUNTY COMMISSIONER'S RECORDS
VOL. 11, PAGE 96, 1892, 4 RODS

ALSO SEE S.H.C. FILE NO. 10-59
SHEET 1 OF 1, 1946

IN ENFIELD:

OLD COUNTY ROAD
SEE COUNTY COMMISSIONER'S RECORDS
VOL. 8, PAGE 325, 1874, 4 RODS

ROUTES 6/16/155/BRIDGE STREET
SEE S.H.C. FILE NO. 10-171
SHEET 1 OF 2, 1966

PENOBSCOT RIVER BRIDGE
OVER
PENOBSCOT RIVER

BRIDGE NO. 2660 WIN 16705.00

SYMBOLS
IP or IPF (IRON PIPE or PIN FOUND)
S.T. (SEPTIC TANK)
(ROW MONUMENT)
BM (TRAVERSE POINT)
WELL
GRADING LIMIT LINE
CONSTRUCTION LIMIT LINE
PROPERTY LINE
LIMITS OF "ARO" RIGHT OF WAY PORTION (L.O.W.P.)
EXISTING RIGHT OF WAY
NEW RIGHT OF WAY
NEW ROW WITHIN EXIST. ROW
CONTROL OF ACCESS
WATER LINE
GAS LINE
ELECTRIC LINE
TELEPHONE LINE
SEWER LINE

ITEM	TECH	CHECKED
BASE MAP		
EXIST. R/W	VDP/BDM	
PROP. LINES	BDM	
AREAS	BDM	

STATE OF MAINE
DEPARTMENT OF TRANSPORTATION
16 STATE HOUSE STATION - AUGUSTA, ME 04333-0016
ENFIELD
RIGHT OF WAY MAP

REVISIONS

NO.	DATE	DESCRIPTION	BY

PLAN FILED IN PLAN BOOK	PAGE	COUNTY RECORD			
NO.	GRANTOR	INSTRUMENT	DATE	BOOK	PAGE
1		COND.	8/12/14	13612	173

DAVID BERNHARDT
COMMISSIONER
JOYCE NOEL TAYLOR
CHIEF ENGINEER

DATE

STATE HIGHWAY "40"
RTE. 6/116/155 BRIDGE STREET
ENFIELD PENOBSCOT COUNTY
FEDERAL AID PROJECT NO. BH-1670(500)X PART I, II

SEPTEMBER 2014 | RIGHT-OF-WAY MAP
SCALE 1" = 25' | SHEET 4 OF 4

D.O.T. FILE NO. 10-489

SHEET NUMBER
127
OF 127

Filename: ...\00\row\msto\004_RWPLAN4.dgn Division: BRIDGE Username: David.Show Date:12/22/2014