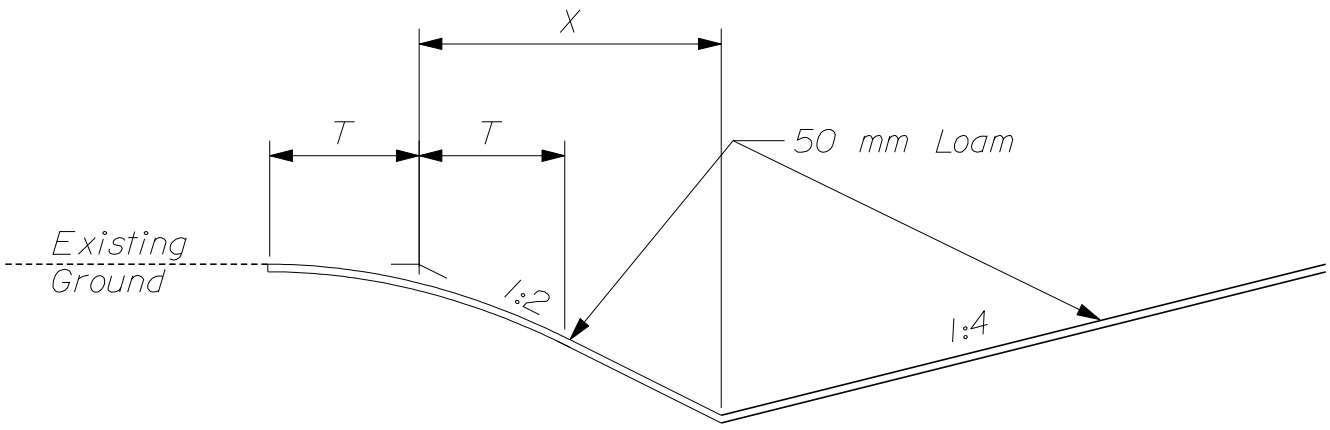

When:
X > 1.5 m , Then T= 1.5 m
X ≤ 1.5 m , Then T= X
This formula may be modified in the field by the Resident to avoid property damage.

BACK-SLOPE ROUNDING DETAIL

203(03)