**Allied Engineering**

Structural Mechanical Electrical Commissioning

# SHOP DRAWING REVIEW COVER SHEET

Project Name, Project #: **Acadia Gateway #07-010**

Date Received: 10/28/11 Date Due: 11/11/11

AEI Shop Drawing #: **292** Contractor Shop Drawing #:

AEI Project Manager: William P. Faucher, P.E.

Contractor: Nickerson & O'Day, Inc.

Item Description: Architectural As-Builts

Spec. Section Number(s): 017700 ☐ Mailed ☒ emailed Date Returned:01/05/12

Christian, Steve, Ed, Jeff

N:\Projects\2007\07010 - MDOT Acadia Gateway Facility\40 Construction\Shops\SHOP DRAWING REVIEW COVER SHEET 292.doc

CHECKING IS ONLY FOR GENERAL CONFORMANCE WITH THE DESIGN CONCEPT OF THE PROJECT AND COMPLIANCE WITH THE INFORMATION GIVEN IN THE CONTRACT DOCUMENTS. CONTRACTOR IS RESPONSIBLE FOR QUANTITIES; DIMENSIONS TO BE CONFIRMED AND CORRELATED AT THE JOB SITE; INFORMATION THAT PERTAINS SOLELY TO THE FABRICATION PROCESS FOR TECHNIQUES OF CONSTRUCTION; COORDINATION OF THE WORK OF ALL TRADES; AND PERFORMING ALL WORK IN A SAFE AND SATISFACTORY MANNER. THIS REVIEW DOES NOT MODIFY CONTRACTOR'S DUTY TO COMPLY WITH THE CONTRACT DOCUMENTS.

_X_REVIEWED
____REVIEWED W/NOTES, ***No Resubmission*** Required
____REVIEWED W/NOTES, ***Resubmission*** *Required*
____NOT ACCEPTABLE

1/2

NOTES:

Reviewed by: Allied Engineering, Inc.

**Reviewer: __Tim VanAschwege for AECOM**

**160 Veranda Street**
**Portland, ME 04103**

**T 207.221.2260**
**F 207.221.2266**
www.allied-eng.com

## ARCHITECTURAL NOTES

GENERAL ARCHITECTURAL NOTES:

1. THESE DRAWINGS HAVE BEEN DEVELOPED FROM EXISTING DRAWINGS WHICH MAY NOT REFLECT ACTUAL FIELD CONDITIONS. THE CONTRACTOR SHALL VERIFY THESE DRAWINGS WITH EXISTING FIELD CONDITIONS AND NOTIFY THE ENGINEER IMMEDIATELY OF INCONSISTENCIES BETWEEN THESE DRAWINGS AND ACTUAL CONDITIONS BEFORE SUBMITTING FINAL BID.

2. THE CONTRACTOR SHALL NOTIFY THE ENGINEER IMMEDIATELY IF ANY WORK INDICATED IN THE CONTRACT DOCUMENTS CANNOT BE PERFORMED DUE TO EXISTING FIELD CONDITIONS BEFORE SUBMITTING FINAL BID.

3. ALL WORK SHALL BE IN FULL ACCORDANCE WITH ALL STATE AND LOCAL BUILDING CODES.

## GENERAL BUILDING CODE INFORMATION

APPLICABLE BUILDING CODES:

MAINE MODEL BUILDING CODE
MAINE MODEL BUILDING CODE FOR SAFETY, LIFE FROM FIRES IN BUILDINGS & STRUCTURES 2006
2003 INTERNATIONAL BUILDING CODE WITH AMENDMENTS.
1997 NFPA 101 FIRE AND LIFE SAFETY CODE.WITH AMENDMENTS
ADA ACCESSIBILITY GUIDELINES.

OCCUPANCY USE GROUP CLASSIFICATON:
DOMINANT OCCUPANCY GROUP: SEPARATED MIXED USE: B, S1
INCIDENTAL OCCUPANCY GROUPS: S2, R3

CONSTRUCTION TYPE CLASSIFICATION (CHAPTER 6):
NEW CONSTRUCTION: 2B

FIRE-RESISTANCE RATING REQUIREMENTS FOR BUILDING ELEMENTS (TABLE 601):

| | |
|---|---|
| STRUCTURAL FRAME: | 0 HR |
| FIRE ENCLOSURE FOR EXITS: | 0 HR- EXCEPTION-IBC 1019.1 EXCEPTIONS 8,9 |
| SHAFTS: | 1 HR |
| STRUCTURAL ELEMENTS: | 0 HR |
| FLOORS: | 0 HR |
| ROOF: | 0 HR |

FIRE SEPARATION - FIRE-RESISTANCE RATINGS (TABLE 705.4):
GROUP 2 HR SEPARATION BETWEEN USE GROUP B AND S1

BUILDING HEIGHT (TABLE 503): XX

BUILDING AREA (TABLE 503): XX

OCCUPANCY LOADS: LEVEL 1 - 107 OCCUPANTS, LEVEL 2 - 54 OCCUPANTS

MEANS OF EGRESS:
MINIMUM NUMBER OF EXITS: 2
TRAVEL DISTANCES: USE GROUP B- 300 FEET, USE GROUP S1 - 250 FEET

## SYMBOLS

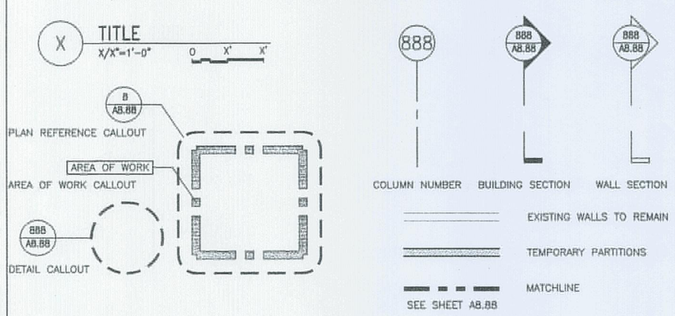


## ARCHITECTURAL ABBREVIATIONS

| | |
|---|---|
| A/C | AIR CONDITIONING |
| ACC | ACCESSIBLE |
| ACCT | ACCOUNTING |
| ACOUST | ACOUSTICAL |
| ACS | ACCESS CONTROL SYSTEM |
| ACT | ACOUSTICAL CEILING TILE |
| ADA | AMERICAN DISABILITY ACT |
| AD | AREA DRAIN |
| ADJ | ADJUSTABLE |
| AE | AMERICAN EAGLE AIRLINES |
| AFF | ABOVE FINISHED FLOOR |
| AHU | AIR HANDLING UNIT |
| ALUM | ALUMINUM |
| APPROX | APPROXIMATELY |
| ARCH | ARCHITECTURAL; ARCHITECT |
| ASST | ASSISTANT |
| ATTD | ATTACHED |
| BD | BOARD |
| BEL | BELOW |
| BIT | BITUMINOUS |
| BLDG | BUILDING |
| BLK | BLOCK(ING) |
| BM | BEAM |
| BO | BOTTOM OF |
| BOT | BOTTOM |
| BS | BOTH SIDES |
| BTWN | BETWEEN |
| CAB | CABINET |
| CB | CATCH BASIN |
| CEM | CEMENT |
| CG | CORNER GAURD |
| CIP | CAST-IN-PLACE |
| CJ | CONTROL JOINT |
| CL | CENTER LINE |
| CLG | CEILING |
| CLNG | CEILING |
| CLR | CLEAR(ANCE) |
| CLR OPG | CLEAR OPENING |
| CMU | CONCRETE MASONRY UNIT |
| COL(S) | COLUMN(S) |
| CONC | CONCRETE |
| CONF | CONFERENCE |
| CONST | CONSTRUCTION |
| CONT | CONTINUOUS |
| CORR | CORRIDOR, CORRUGATED |
| CPT | CARPET |
| CT | CERAMIC TILE |
| CTR | CENTER |
| D | DEEP |
| DBL | DOUBLE |
| DEMO | DEMOLISH/DEMOLITION |
| DET | DETAIL |
| DF | DRINKING FOUNTAIN |
| DIA | DIAMETER |
| DIM | DIMENSION |
| DIV | SPECIFICATION DIVISION |
| DN | DOWN |
| DO | DOOR OPENING |
| DR | DOOR |
| DWG | DRAWING |
| EA | EACH |
| EB | EXPANSION BOLT |
| EJ | EXPANSION JOINT |
| EL | ELEVATION |
| ELEC | ELECTRICAL |
| ELEV | ELEVATOR |
| ENCL | ENCLOSURE |
| EQ | EQUAL |
| EQUIP | EQUIPMENT |
| EV | ELEVATOR |
| EX | EXISTING |
| EXEC | EXECUTIVE |
| EXH | EXHAUST |
| EXIST | EXISTING |
| EXP | EXPANSION, EXPOSED |
| EXT | EXTERIOR |
| FA | FIRE ALARM |
| FAB | FABRICATE(D) |
| FACP | FIRE ALARM CONTROL PANEL |
| FAST | FASTEN(ER) |
| FD | FLOOR DRAIN |
| FDN | FOUNDATION |
| FE | FIRE EXTINGUISHER |
| FEC | FIRE EXTINGUISHER CABINET |
| FF | FACTORY FINISH |
| FHC | FIRE HOSE CABINET |
| FIN | FINISH |
| FIXT | FIXTURE |
| FL | FLOOR |
| FLUOR | FLUORESCENT |
| FND | FEMININE NAPKIN DISPOSAL |
| FOC | FACE OF CONCRETE |
| FOF | FACE OF FINISH |
| FOS | FACE OF STUDS |
| FP | FIRE PROTECTION |
| FRP | FIBERGLASS REINFORCED PANEL |
| FRT | FIRE RETARDANT |
| FT | FEET / FOOT |
| FTG | FOOTING |
| FURR | FURRING |
| GA | GAUGE |
| GALV | GALVANIZED |
| GB1 | GRAB BAR (42") |
| GB2 | GRAB BAR (36") |
| GB3 | GRAB BAR (24") |
| GC | GENERAL CONTRACTOR |
| GEN | GENERAL |
| GL | GLASS |
| GR | GRADE |
| GWB | GYPSUM WALLBOARD |
| H | HIGH, HEIGHT |
| HB | HOSE BIBB |
| HC | HOLLOW CORE |
| HDCP | HANDICAP PERSON |
| HDWD | HARDWOOD |
| HDWR | HARDWARE |
| HGT | HEIGHT |
| HM | HOLLOW METAL |
| HORIZ | HORIZONTAL |
| HVAC | HEATING, VENTILATING AND AIR-CONDITIONING |
| ID | INSIDE DIAMETER |
| INCAND | INCANDESCENT |
| INCL | INCLUDE(D, ING) |
| INSTL | INSTALLED |
| INSUL | INSULATION |
| INT | INTERIOR |
| JAN | JANITOR |
| JT | JOINT |
| L | LENGTH |
| LAB | LABORATORY |
| LAM | LAMINATE(D) |
| LAV | LAVATORY |
| LCKR | LOCKER |
| LH | LEFT HAND |
| LHR | LEFT HAND REVERSE |
| LP | LOW POINT |
| LTG | LIGHTING |
| MACH | MACHINE |
| MAINT | MAINTENANCE |
| MANUF | MANUFACTURER |
| MAS | MASONRY |
| MAT | MATERIAL |
| MAX | MAXIMUM |
| MECH | MECHANICAL |
| MED | MEDIUM, MEDIAN |
| MEMB | MEMBRANE |
| MEZZ | MEZZANINE |
| MGR | MANAGER |
| MIN | MINIMUM |
| MIR | MIRROR |
| MISC | MISCELLANEOUS |
| MO | MASONRY OPENING |
| MOD | MODULAR |
| MR | MOISTURE RESISTANT |
| MTD | MOUNTED |
| MTG | MOUNTING |
| MTL | METAL |
| MWK | MILLWORK |
| N/A | NOT APPLICABLE |
| N.I.C. | NOT IN CONTRACT |
| NO | NUMBER |
| NOM | NOMINAL |
| NTS | NOT TO SCALE |
| OA | OVERALL |
| O.C. | ON CENTER |
| OCC | OCCUPANT |
| OD | OUTSIDE DIAMETER |
| OFF | OFFICE |
| OPNG | OPENING |
| OPP H | OPPOSITE HAND |
| OPP HAND | |
| OPP | OPPOSITE |
| OPS | OPERATIONS |
| ORD | OVERFLOW ROOF DRAIN |
| P | PAINT |
| PERF | PERFORATED |
| PERIM | PERIMETER |
| PRF | PREFORMED |
| PFN | PREFINISHED |
| PL | PLATE |
| PLAS LAM | PLASTIC LAMINATE |
| PLAS | PLASTER |
| PLUMB | PLUMBING |
| PLYWD | PLYWOOD |
| PM | PRESSED METAL |
| POL | POLISHED |
| PR | PAIR |
| PT | POINT |
| P-T | PRESSURE-TREATED |
| PTD | PAINTED |
| PTDD | PAPER TOWEL DISPENCER & DISPOSAL |
| PTN | PARTITION |
| QT | QUARRY TILE |
| QTY | QUANTITY |
| R | RADIUS, RISER |
| RB | RUBBER |
| RCP | REFLECTED CEILING PLAN |
| RD | ROOF DRAIN |
| RE | RESIDENT ENGINEER |
| REF | REFERENCE |
| REG | REGISTER |
| REINF | REINFORCED |
| RENOV | RENOVATE(D) |
| REQ | REQUIRED |
| RESIL | RESILIENT |
| RET | RETURN |
| REVRH | REVISION |
| RHR | RIGHT HAND |
| RWL | RIGHT HAND REVERSE |
| RM | RAIN WATER LEADER |
| RO | ROOM |
| RU | ROUGH OPENING |
| | ROLLUP |
| S | SINGLE |
| SC | SOLID CORE |
| SCD | SEAT COVER DISPENSER |
| SCHED | SCHEDULE |
| SD | SECTIONAL DOOR |
| SDPR | SOAP DISPENSER |
| SECT | SECTION |
| SEP | SEPARATE |
| SHT | SHEET |
| SHTH | SHEATHING |
| SHWR | SHOWER |
| SIM | SIMILAR |
| SK | SINK |
| SPEC | SPECIFICATIONS |
| SPLR | SPRINKLER |
| SPM | SPRINKLER MAIN |
| SQ | SQUARE |
| SS; SST | STAINLESS STEEL |
| STA | STATION |
| STD | STANDARD |
| STL | STEEL |
| STOR | STORAGE |
| STRUCT | STRUCTURAL |
| SUSP | SUSPENDED |
| SYM | SYMMETRICAL |
| T | TREAD |
| T&G | TONGUE AND GROOVE |
| TCO | TEMPORARY CERTIFICATE OF OCCUPANCY |
| TEMP | TEMPORARY, TEMPERED |
| TEL | TELEPHONE |
| TER | TERRAZZO |
| THK | THICK(NESS) |
| THRU | THROUGH |
| TLT | TOILET |
| TO | TOP OF |
| TOC | TOP OF CURB, TOP OF CONCRETE |
| TOM | TOP OF MASONRY |
| TOS | TOP OF STEEL |
| TOW | TOP OF WALL |
| TPT | TOILET PARTITION |
| TTD | TOILET TISSUE DISPENSER |
| TYP | TYPICAL |
| UNF | UNFINISHED |
| UON | UNLESS OTHERWISE NOTED |
| UR | URINAL |
| VB | VAPOR BARRIER |
| VCT | VINYL COMPOSITION TILE |
| VERT | VERTICAL |
| VEST | VESTIBULE |
| VIF | VERIFY IN FIELD |
| VIN | VINYL |
| VWC | VINYL WALLCOVERING |
| W | WIDE, WIDTH |
| W/ | WITH |
| WC | WATER CLOSET |
| WD | WOOD |
| WIN | WINDOW |
| WO | WINDOW OPENING |
| W/O | WITHOUT |
| WP | WORKING POINT |
| WPR | WATERPROOF(ING) |
| WS | WEATHERSTRIP(ING) |
| WT | WEIGHT |

AS-BUILT

ARCHITECTURAL


AECOM USA, Inc.
66 Long Wharf
Boston, MA
T 617.723.1700 F 617.723.6856
AECOM
www.aecom.com

Allied Engineering
160 Veranda Street
Portland, Maine 04103
T:
F:
Web:


Allied Project No: 07010 | Cad File: A0.01.dwg

STATE OF MAINE
DEPARTMENT OF TRANSPORTATION

| | DATE |
|---|---|
| FED PIN NO: | |
| PIN NO: 16123.50 | |

LICENSED ARCHITECT TERRY P. ROOKARD No. 3360 STATE OF MAINE

| PROJECT INFORMATION | |
|---|---|
| PROGRAM | - |
| PROJECT MANAGER | WFP |
| DESIGNER | TV |
| CONSULTANT | ALLIED ENGINEERING |
| PROJECT RESIDENT | - |
| CONTRACTOR | - |
| PROJECT COMPLETION DATE | - |

SIGNATURE
TERRY P. ROOKARD
ARCH. LIN. NUMBER
3360
DATE MAY 1, 2009

MAINE DEPARTMENT OF TRANSPORTATION
ACADIA GATEWAY FACILITY
BUS MAINTENANCE FACILITY

SYMBOLS, NOTES & ABBREVIATIONS

© COPYRIGHT 2007 ALLIED ENGINEERING, INC.

SHEET NUMBER
A0.01
OF

Filename:- Date:- Division:- Username:-
J:\PROJECTS\3700-Trenton\CAD\A\Sheet\A0.01.dwg Aug 04, 2009 - 12:06pm

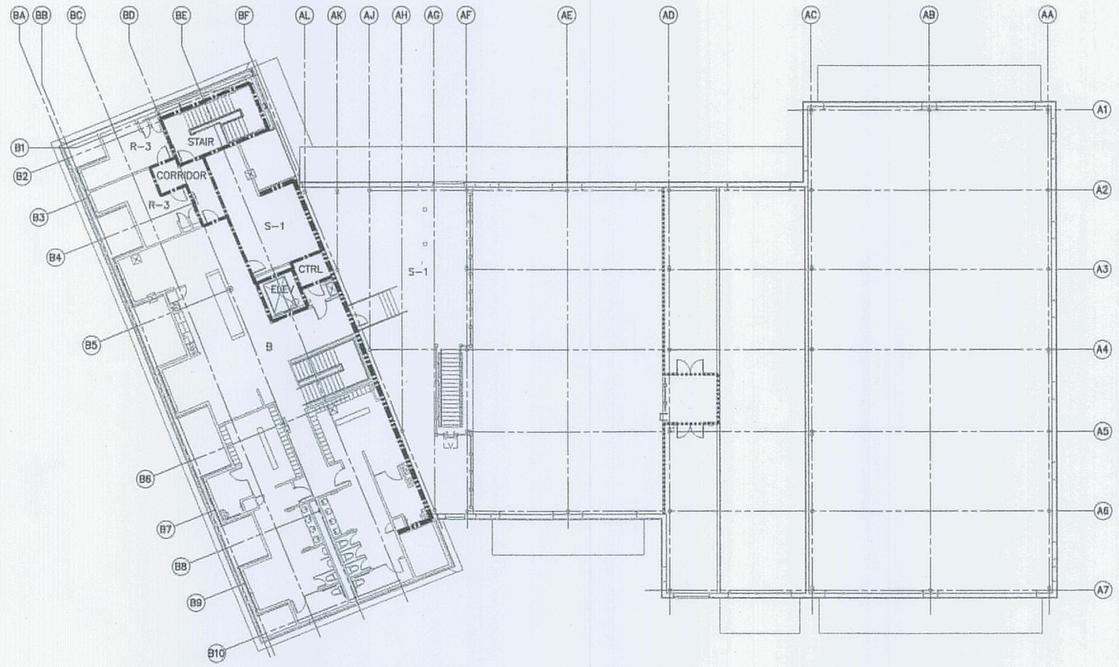


2 SECOND FLOOR FIRE RATING PARTITION PLAN
1/16"=1'-0"
0 8' 16'

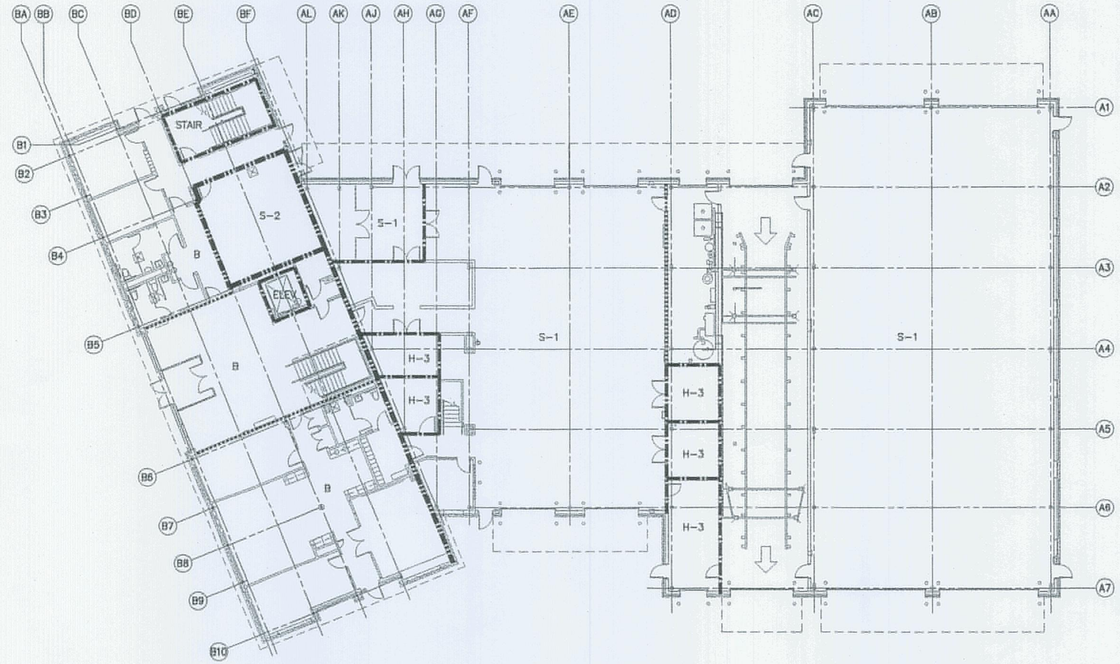


1 FIRST FLOOR FIRE RATING PARTITION PLAN
1/16"=1'-0"
0 8' 16'

## KEY PLAN

| | |
|---|---|
| SMOKE PARTITION | |
| 1 HOUR PARTITION | |
| 2 HOUR PARTITION | |

## USE GROUP

| | |
|---|---|
| B | BUSINESS |
| H-3 | HAZARDOUS 3 |
| S-1 | STORAGE 1 |
| S-2 | STORAGE 2 |
| R-3 | RESIDENTIAL 3 |

PROJECT NORTH
true north


AECOM USA, Inc.
66 Long Wharf
Boston, MA
T 617.723.1700 F 617.723.6856

AECOM
www.aecom.com

Allied Engineering
Northeast Mechanical Electrical Consultants

160 Veranda Street
Portland, Maine 04103
T: 207.221.2650
F: 207.221.2266
Web: www.allied-eng.com


Allied Project No: 07010 | Cad File: A0.02.dwg

STATE OF MAINE
DEPARTMENT OF TRANSPORTATION

| | DATE |
|---|---|
| FED PIN NO: | |
| PIN NO: 16123.50 | |

LICENSED ARCHITECT TERRY P. ROOKARD No. 3360 STATE OF MAINE

| INFORMATION | |
|---|---|
| PROJECT | – |
| PROGRAM | – |
| PROJECT MANAGER | WFP |
| DESIGNER | TV |
| CONSULTANT | ALLIED ENGINEERING |
| PROJECT RESIDENT | – |
| CONTRACTOR | – |
| PROJECT COMPLETION DATE | – |

SIGNATURE
TERRY P. ROOKARD
ARCH. LIN. NUMBER
3360
DATE
MAY 1, 2009

MAINE DEPARTMENT OF TRANSPORTATION
# ACADIA GATEWAY FACILITY
BUS MAINTENANCE FACILITY

## FIRE RATING PARTITION PLANS

© COPYRIGHT 2007 ALLIED ENGINEERING, INC.

SHEET NUMBER
A0.02
OF

Filename:- Date:- Division:- Username:-
J:\PROJECTS\3700-Trenton\CAD\A\Sheet\A0.02.dwg Aug 04, 2009 - 12:35pm

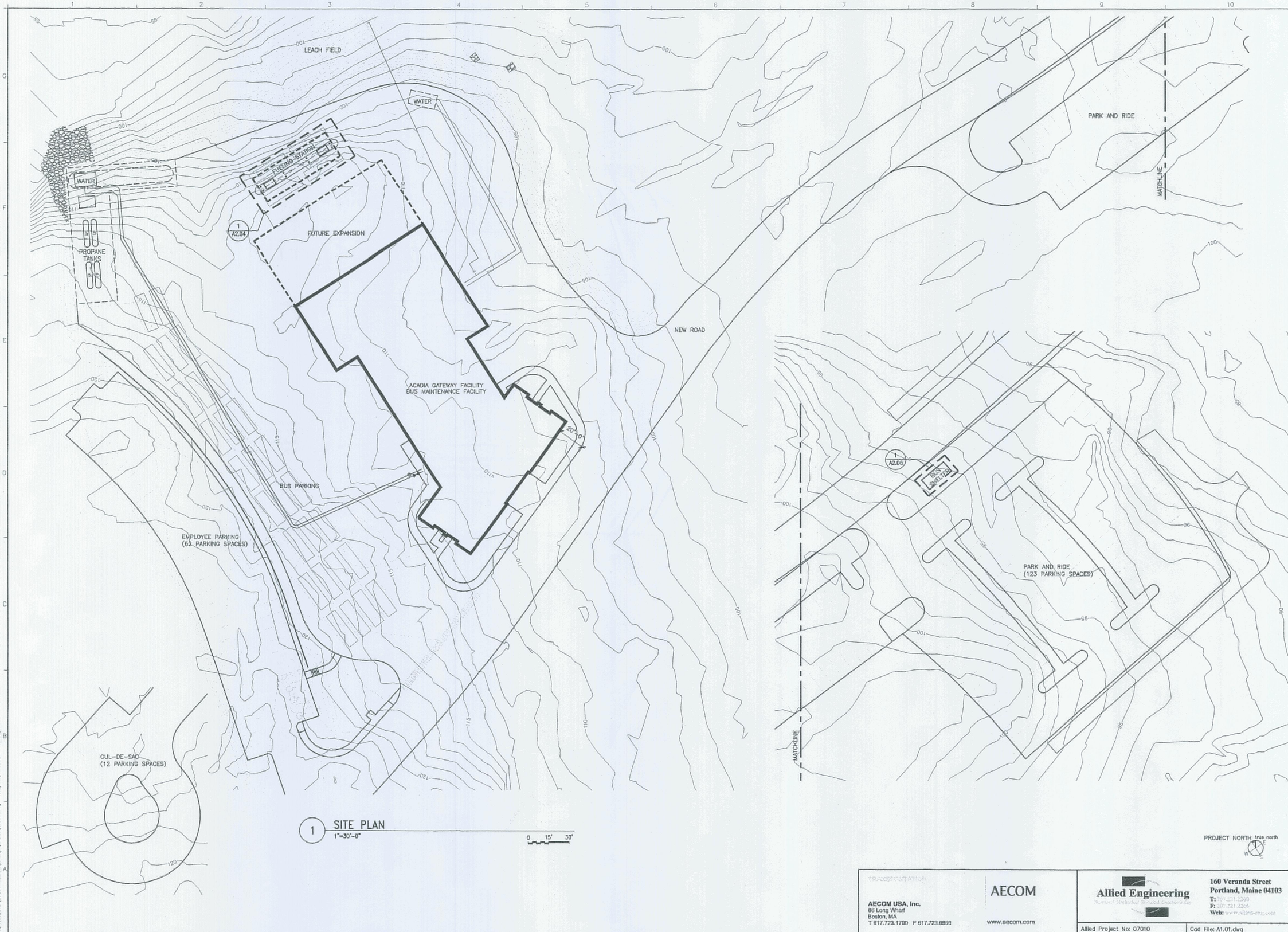


1 SITE PLAN
1"=30'-0"

STATE OF MAINE
DEPARTMENT OF TRANSPORTATION

| | DATE |
|---|---|
| FED PIN NO: | |
| PIN NO: 16123.50 | |

LICENSED ARCHITECT TERRY P. ROOKARD No. 3360 STATE OF MAINE

| PROJECT INFORMATION | |
|---|---|
| PROGRAM | - |
| PROJECT MANAGER | WFF |
| DESIGNER | TV |
| CONSULTANT | ALLIED ENGINEERING |
| PROJECT RESIDENT | - |
| CONTRACTOR | - |
| PROJECT COMPLETION DATE | - |

SIGNATURE
TERRY P. ROOKARD
ARCH. LIN. NUMBER
3360
DATE MAY 1, 2009

MAINE DEPARTMENT OF TRANSPORTATION
ACADIA GATEWAY FACILITY
BUS MAINTENANCE FACILITY

SITE PLAN

© COPYRIGHT 2007 ALLIED ENGINEERING, INC.

SHEET NUMBER
A1.01
OF

TRANSPORTATION

AECOM USA, Inc.
66 Long Wharf
Boston, MA
T 617.723.1700 F 617.723.6856

AECOM
www.aecom.com

Allied Engineering
Waterfront Mechanical Consulting Engineers

160 Veranda Street
Portland, Maine 04103
T: 207.231.2398
F: 207.231.2266
Web: www.allied-eng.com

Allied Project No: 07010
Cad File: A1.01.dwg

Filename: -
Division: -
Date: -
Username: -
J:\PROJECTS\3700-Trenton\CAD\A\Sheet\A1.01.dwg Aug 04, 2009 - 12:35pm

Elevator Re-Submittal Shop - N&O Submittal # 14-01.

ELEVATOR FIRST FLOOR PLAN

NTS = NOT TO SCALE

1/2" = 1'-0"

New Plan Configuration - First Floor Plan

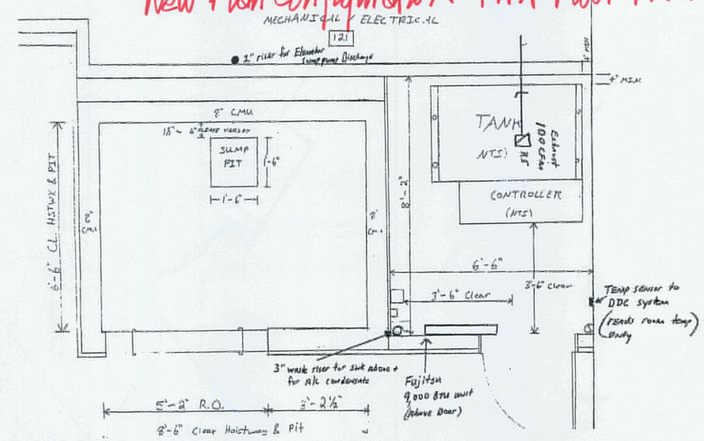

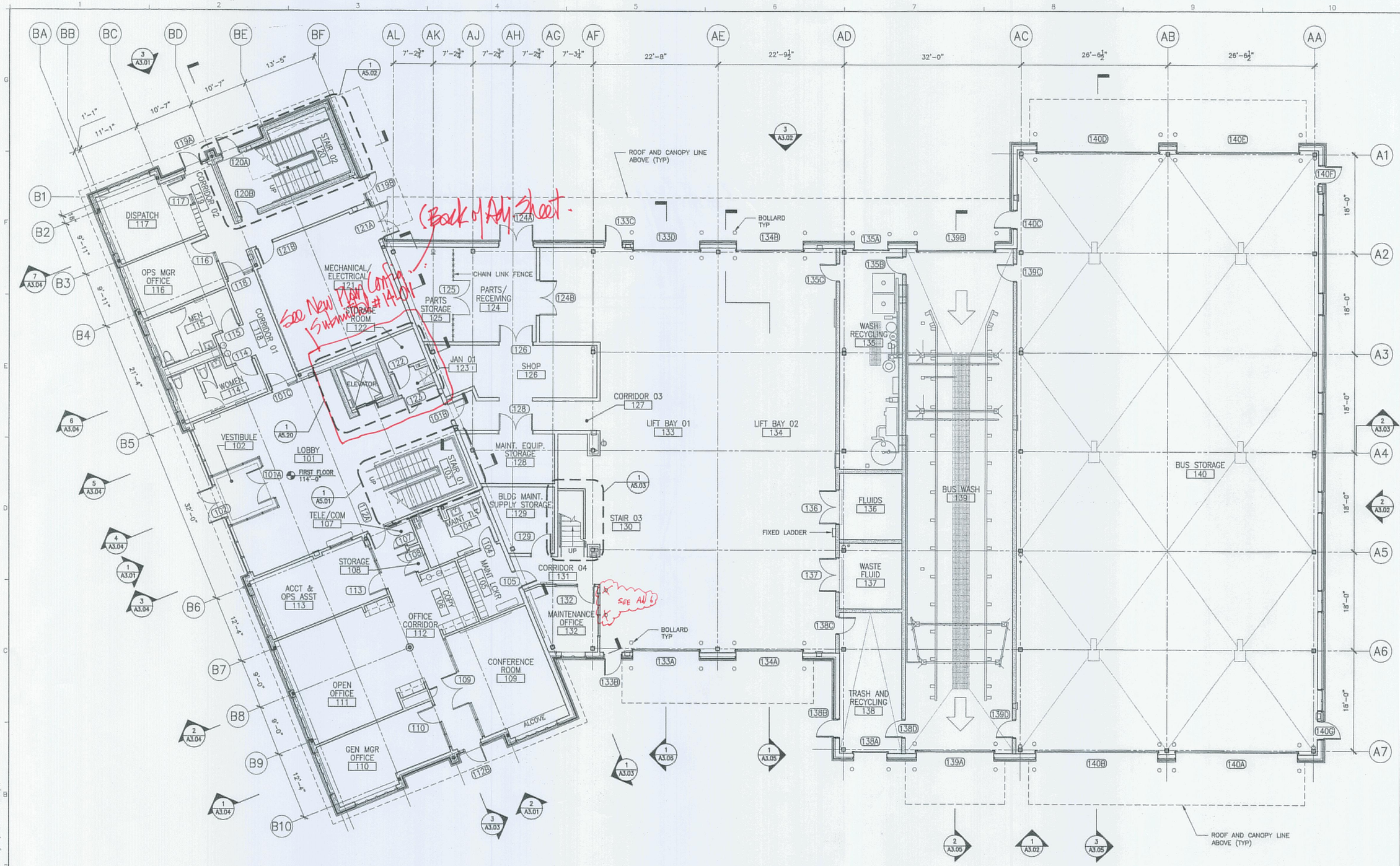


1 FIRST FLOOR PLAN
1/8"=1'-0"

NOTE: FOR ENLARGED PLANS SEE SHEETS A7.01 – A7.05
FOR FINISH SCHEDULE SEE SHEET A8.01
FOR DOO SCHEDULE SEE SHEET A8.03

PROJECT NORTH true north

AECOM USA, Inc.
66 Long Wharf
Boston, MA
T 617.723.1700 F 617.723.6856

AECOM
www.aecom.com

Allied Engineering
160 Veranda Street
Portland, Maine 04103
T: 207.831.1886
F: 207.831.1266
Web: www.alliedeng.com

Allied Project No: 07010
Cad File: A2.01.dwg

STATE OF MAINE
DEPARTMENT OF TRANSPORTATION

| DATE | |
|---|---|
| FED PIN NO: | |
| PIN NO: 16123.50 | |

LICENSED ARCHITECT TERRY P. ROOKARD No. 3360 STATE OF MAINE

| PROJECT INFORMATION | |
|---|---|
| PROGRAM | - |
| PROJECT MANAGER | WPP |
| DESIGNER | TV |
| CONSULTANT | ALLIED ENGINEERING |
| PROJECT RESIDENT | - |
| CONTRACTOR | - |
| PROJECT COMPLETION DATE | - |

SIGNATURE
TERRY P. ROOKARD
ARCH. LIN. NUMBER
3360
DATE MAY 1, 2009

MAINE DEPARTMENT OF TRANSPORTATION
ACADIA GATEWAY FACILITY
BUS MAINTENANCE FACILITY

FIRST FLOOR PLAN

© COPYRIGHT 2007 ALLIED ENGINEERING, INC.

SHEET NUMBER
A2.01
OF

Filename:– Date:– Division:– Username:–
J:\PROJECTS\3700-Trenton\CAD\A\Sheet\A2.01.dwg Aug 04, 2009 – 12:35pm

Elevator Re-Submittal Shop - N*O Submittal # 14-01 -

ELEVATOR SECOND FLOOR PLAN

1/2" = 1'-0"

New Plan Configuration - Second Floor Plan -

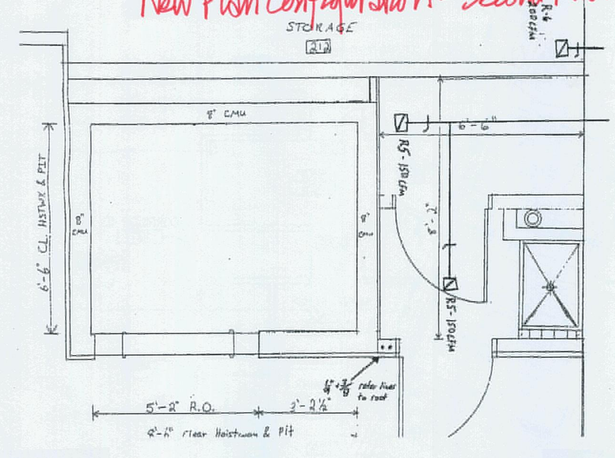

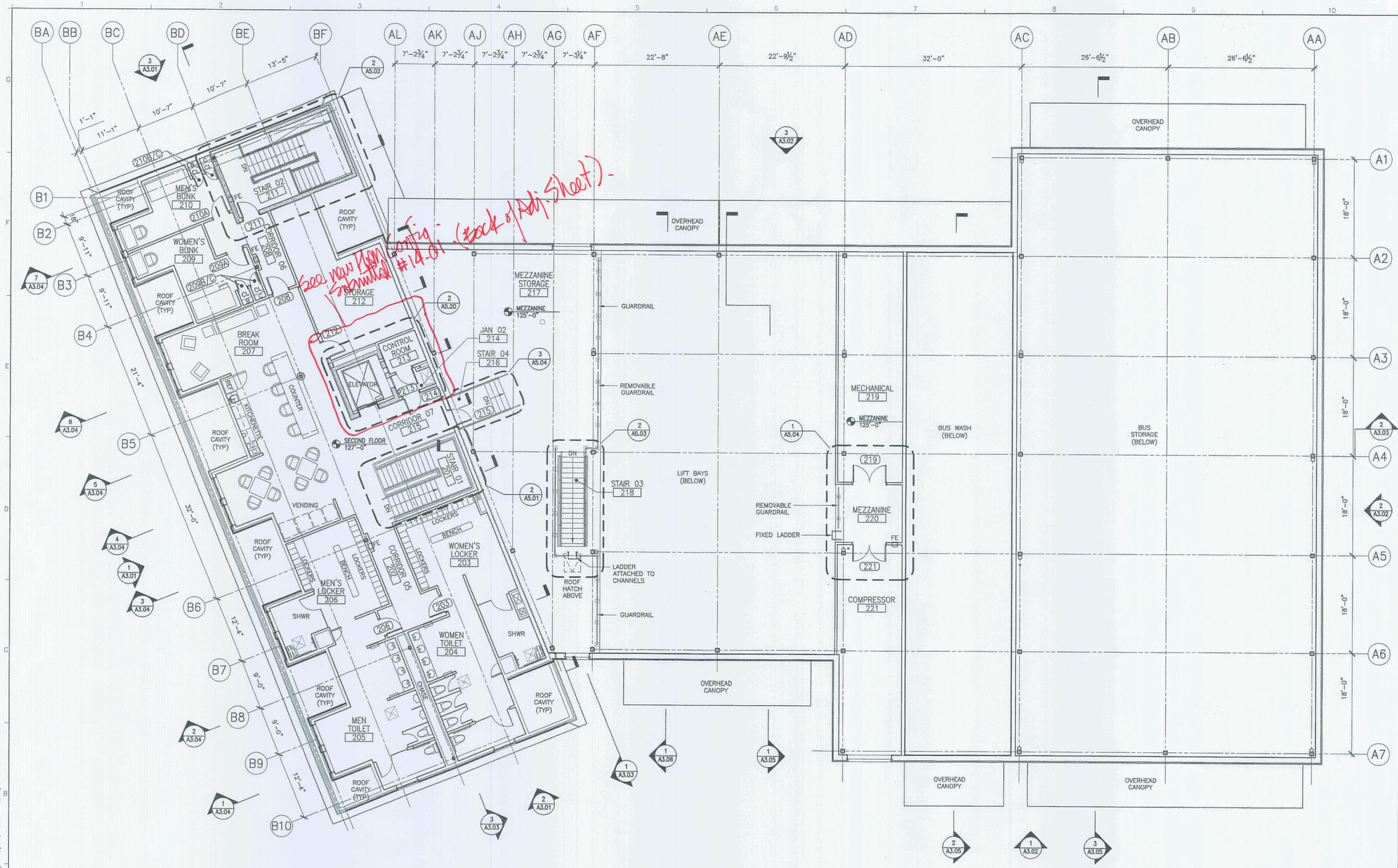


1 SECOND FLOOR PLAN
1/8"=1'-0"
0 4' 8'

PROJECT NORTH
true north

NOTE: FOR ENLARGED PLANS SEE SHEETS A7.06 – A7.10
FOR FINISH SCHEDULE SEE SHEET A8.01
FOR DOO SCHEDULE SEE SHEET A8.03


AECOM USA, Inc.
66 Long Wharf
Boston, MA
T 617.723.1700 F 617.723.6856

AECOM
www.aecom.com

Allied Engineering
160 Veranda Street
Portland, Maine 04103
T: 207.221.3266
F: 207.221.2266
Web: www.allied-eng.com


Allied Project No: 07010
Cad File: A2.02.dwg

STATE OF MAINE
DEPARTMENT OF TRANSPORTATION

| DATE | |
|---|---|
| | |

FED PIN NO:
PIN NO: 16123.50

LICENSED ARCHITECT TERRY P. ROOKARD No. 3360 STATE OF MAINE

| INFORMATION | |
|---|---|
| SIGNATURE | |
| TERRY P. ROOKARD | WPF |
| ARCH. LIN. NUMBER 3360 | TV |
| ALLIED ENGINEERING | |
| DATE MAY 1, 2009 | |

| PROJECT INFORMATION | |
|---|---|
| PROGRAM | – |
| PROJECT MANAGER | – |
| DESIGNER | – |
| CONSULTANT | – |
| PROJECT RESIDENT | – |
| CONTRACTOR | – |
| PROJECT COMPLETION DATE | – |

MAINE DEPARTMENT OF TRANSPORTATION
ACADIA GATEWAY FACILITY
BUS MAINTENANCE FACILITY

SECOND FLOOR PLAN

© COPYRIGHT 2007 ALLIED ENGINEERING, INC.

SHEET NUMBER
A2.02
OF

Filename:– Division:– Date:– Username:–
J:\PROJECTS\3700-Trenton\CAD\A\Sheet\A2.02.dwg Aug 04, 2009 – 12:35pm

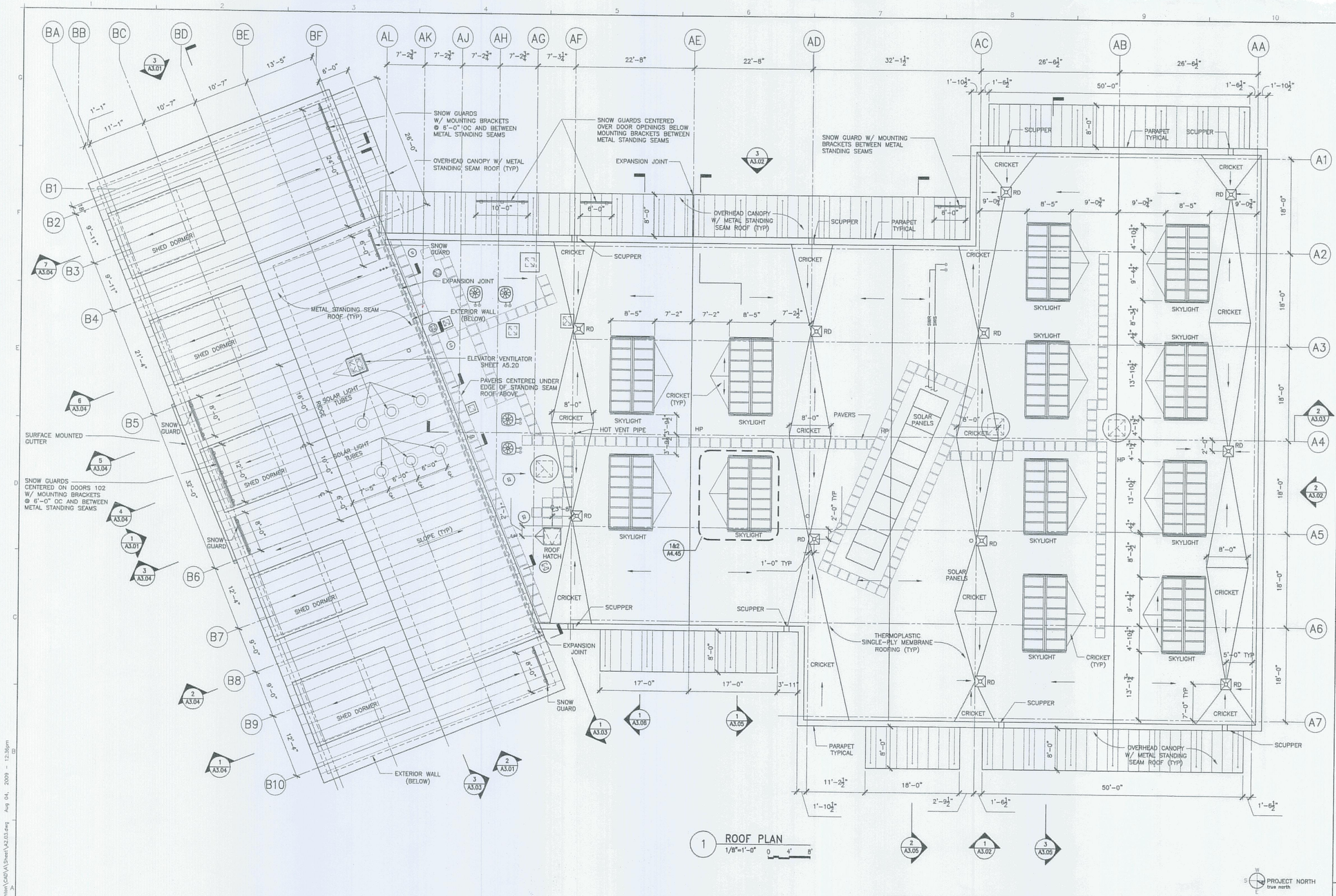


1 ROOF PLAN
1/8"=1'-0"

STATE OF MAINE
DEPARTMENT OF TRANSPORTATION

| DATE | |
|---|---|
| FED PIN NO: | |
| PIN NO: 16123.50 | |

LICENSED ARCHITECT TERRY P. ROOKARD NO. 3360 STATE OF MAINE

| INFORMATION | |
|---|---|
| SIGNATURE | |
| TERRY P. ROOKARD | |
| ARCH. LIN. NUMBER | |
| 3360 | |
| DATE MAY 1, 2009 | |

| PROJECT | INFORMATION |
|---|---|
| PROGRAM | - |
| PROJECT MANAGER | WFF |
| DESIGNER | TV |
| CONSULTANT | ALLIED ENGINEERING |
| PROJECT RESIDENT | - |
| CONTRACTOR | - |
| PROJECT COMPLETION DATE | - |

MAINE DEPARTMENT OF TRANSPORTATION
ACADIA GATEWAY FACILITY
BUS MAINTENANCE FACILITY

ROOF PLAN

SHEET NUMBER
A2.03
OF

© COPYRIGHT 2007 ALLIED ENGINEERING, INC.

AECOM USA, Inc.
66 Long Wharf
Boston, MA
T 617.723.1700 F 617.723.6856
AECOM
www.aecom.com

Allied Engineering
160 Veranda Street
Portland, Maine 04103
T:
F:
Web:

Allied Project No: 07010
Cad File: A2.03.dwg

Filename: -
Division: -
Date: -
Username: -
J:\PROJECTS\3700-Trenton\CAD\A\Sheet\A2.03.dwg Aug 04, 2009 - 12:36pm

FUEL STATION NOTES:

1. ALL STEEL TO BE HOT-DIPPED GALVANIZED, EXCEPT FOR STANDING SEAM ROOFING.
2. ALL STRUCTURAL STEEL TO BE WELDED.
3. WELDS AT TUBE STEEL SHALL BE CONTINUOUS AROUND TUBE OPENINGS.
4. ALL WELDS SHALL BE GROUND SMOOTH AND RE-GALVANIZED.
5. PAINT ALL EXPOSED GALVANIZED STEEL. REFER TO PAINT MANUFACTURER'S REQUIREMENTS FOR PAINTING GALVANIZED METAL.
   PRIMER TO BE A MODIFIED AROMATIC POLYURETHANE PRIMER, (2) COATS.
   PAINT TO BE A HIGH GLOSS INDUSTRIAL ENAMEL – WHITE, (2) COATS.
6. STANDING SEAM ROOFING TO MATCH ADMINISTRATION BUILDING STANDING SEAM ROOFING.
7. EXPOSED DOVETAILED METAL DECK TO BE PAINTED WHITE.
8. PRIME AND PAINT ALL EXTERIOR 8" CMU WALLS LIGHT GRAY.
   ~~PRIME 1 COAT, PAINT 2 COATS MIN.~~
9. THE BASIS OF DESIGN FOR THE FUEL SYSTEM EQUIPMENT AND COMPONENTS SHALL BE TARANTIN TANK COMPANY AS FURNISHED AND INSTALLED BY WEBER ENERGY FUELS–BANGER, DBA HANCOCK OIL COMPANY, THE CURRENT FUEL VENDER FOR THE PROPOSED FACILITY TENANT. THE FUEL COMPONENTS SHALL BE FURNISHED AND INSTALLED UNDER SEPARATE CONTRACT, BY THE OWNER/TENANT UNLESS NOTED OTHERWISE HEREIN. THE CONTRACTOR, UNDER THE WORK OF THIS CONTRACT, SHALL STRICTLY COORDINATE WITH THE OWNER/TENANT/FUEL VENDOR FOR INSTALLATION OF ALL ASSOCIATED WORK NOTED UNDER THE SCOPE OF THIS CONTRACT.
10. IN GENERAL, THE 18,000 GALLON LP TANK, THE LP LIQUID PUMP (CORKEN, F14, 5 HP UNIT WITH REGO A77 DISCHARGE FLOW SIGHT/CHECK DEVICE), ALL LIQUID AND GAS LP PIPING (UNDERGROUND AND ABOVE GROUND), VALVES, REGULATORS, SAFETY DEVICES, AND SPECIALTIES ASSOCIATED WITH THE FUEL TANK AND DISPENSING SYSTEM SHALL BE PROVIDED BY THE FUEL VENDOR. THE LP DISPENSER (CLEAN FUELING TECHNOLOGIES–PRO 8100) SHALL BE PROVIDED BY THE OWNER/FACILITY TENANT, RELOCATED FROM THEIR CURRENT FACILITY AND INSTALLED BY THE FUEL VENDOR UNDER SEPARATE CONTRACT WITH THE OWNER. THE FUEL VENDOR SHALL BE RESPONSIBLE, UNDER SEPARATE CONTRACT, TO PROVIDE MODIFICATION TO THE EXISTING DISPENSER AS REQUIRED TO REMOVE THE INTEGRAL LP PUMP AND RE–TOOL FOR SERVICE FROM THE NEW REMOTE PUMP SET.
11. THE TERM " BY OWNER " REFERRED TO HEREIN, SHALL REFER TO COMPONENTS FURNISHED AND INSTALLED BY THE OWNER OR THE OWNER'S TENANT UNDER SEPARATE CONTRACT, TYPICALLY THROUGH THE SERVICES OF THEIR CURRENT FUEL PROVIDER.
12. IN THE EVENT THAT THE OWNER AND/OR TENANT CHOOSE TO UTILIZE AN ALTERNATE FUEL VENDOR TO THAT SPECIFIED AS THE BASIS FOR DESIGN, THE CONTRACTOR UNDER THIS SCOPE OF WORK, SHALL MAKE ALL NECESSARY CHANGES TO COORDINATE THE INSTALLATION OF THE ALTERNATE EQUIPMENT.
13. THE CONTRACTOR, UNDER THE SCOPE OF THIS PROJECT, SHALL BE RESPONSIBLE FOR STRICT COORDINATION WITH THE OWNER TO INSURE THAT INSTALLATION OF THE LP SYSTEM COMPONENTS (BY THE OWNER), FACILITATES THE OVERALL SCHEDULE PROPOSED FOR THIS PROJECT.
14. PACKAGED FIRE SUPPRESSION SYSTEM, WHERE REQUIRED BY THE AUTHORITY HAVING JURISDICTION, SHALL BE FURNISHED AND INSTALLED BY THE OWNER, THROUGH THE FUEL SERVICE PROVIDER. COORDINATE AS REQUIRED.

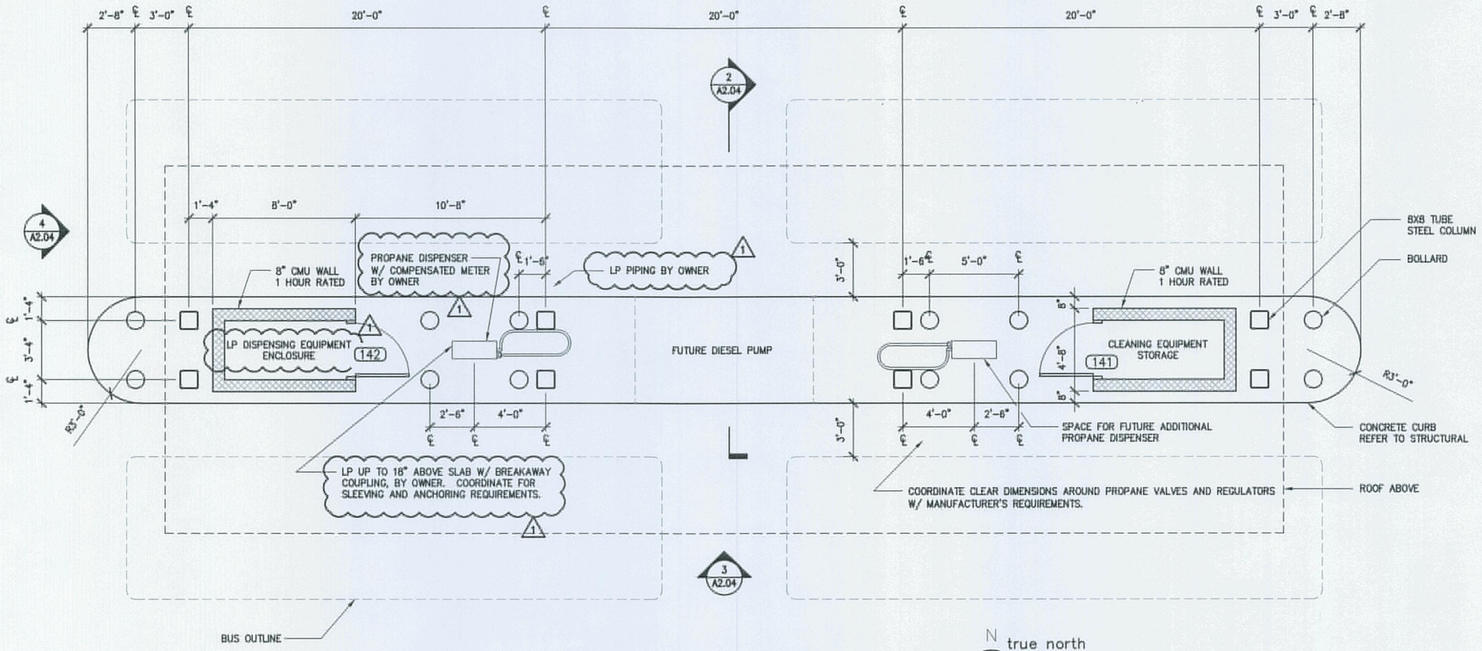


1 FUELING STATION FLOOR PLAN
1/4"=1'-0"
0 2' 4'

PROJECT NORTH
FUELING STATION ORIENTATION
REFER TO SITE PLAN SHEET A1.01

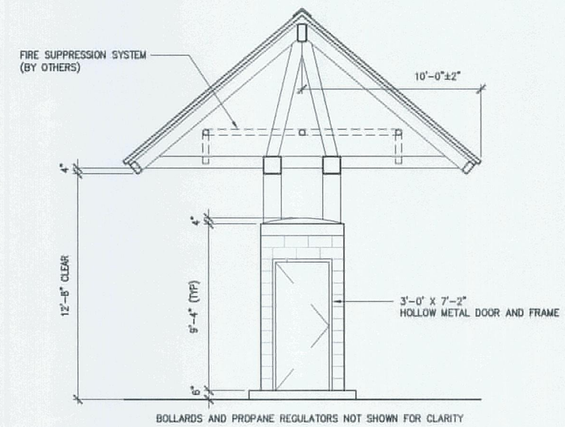


2 FUELING STATION SECTION
1/4"=1'-0"
0 2' 4'

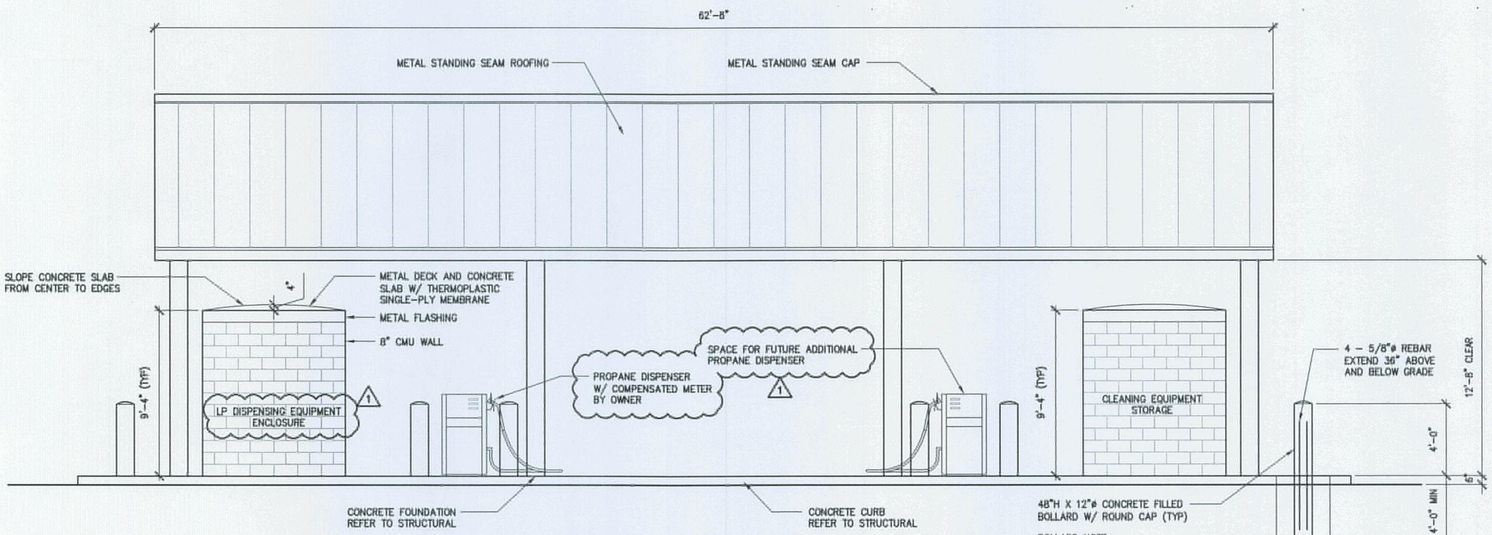


3 FUELING STATION FRONT ELEVATION
1/4"=1'-0"
0 2' 4'

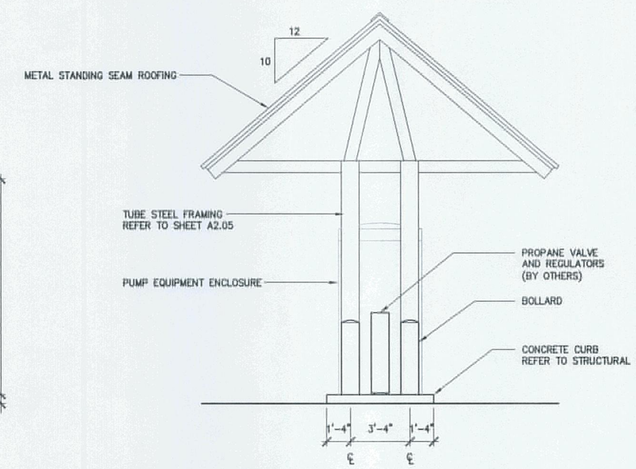


4 FUELING STATION SIDE ELEVATION
1/4"=1'-0"
0 2' 4'

| REVISION NO. | REVISION DATE | DESCRIPTIONS |
|---|---|---|
| 1 | 10/29/09 | AMENDMENT NO 4 |


AECOM USA, Inc.
66 Long Wharf
Boston, MA
T 617.723.1700 F 617.723.6856

AECOM
www.aecom.com

Allied Engineering
160 Veranda Street
Portland, Maine 04103
T: 207.221.2262
F: 207.221.2264
Web: www.allied-eng.com


Allied Project No: 07010
Cad File: A2.04.dwg

STATE OF MAINE
DEPARTMENT OF TRANSPORTATION

DATE

FED PIN NO:
PIN NO: 16123.50

LICENSED ARCHITECT TERRY P. ROOKARD No. 3360 STATE OF MAINE

| INFORMATION | | |
|---|---|---|
| PROJECT | - | |
| PROGRAM | WPF | SIGNATURE TERRY P. ROOKARD |
| PROJECT MANAGER | TV | ARCH. LIN. NUMBER 3360 |
| DESIGNER | ALLIED ENGINEERING | DATE MAY 1, 2009 |
| CONSULTANT | - | |
| PROJECT RESIDENT | - | |
| CONTRACTOR | - | |
| PROJECT COMPLETION DATE | - | |

MAINE DEPARTMENT OF TRANSPORTATION
ACADIA GATEWAY FACILITY
BUS MAINTENANCE FACILITY
FUELING STATION I

© COPYRIGHT 2007 ALLIED ENGINEERING, INC.

SHEET NUMBER
A2.04
OF

Filename: - Date: - Division: - Username: -
J:\PROJECTS\3700-Trenton\CAD\A\Sheet\A2.04.dwg Oct 27, 2009 - 11:45am

FUEL STATION NOTES:

1. ALL STEEL TO BE HOT-DIPPED GALVANIZED, EXCEPT FOR STANDING SEAM ROOFING.
2. ALL STRUCTURAL STEEL TO BE WELDED.
3. WELDS AT TUBE STEEL SHALL BE CONTINUOUS AROUND TUBE OPENINGS.
4. ALL WELDS SHALL BE GROUND SMOOTH AND RE-GALVANIZED.
5. PAINT ALL EXPOSED GALVANIZED STEEL.
   REFER TO PAINT MANUFACTURER'S REQUIREMENTS FOR PAINTING GALVANIZED METAL.
   PRIMER TO BE A MODIFIED AROMATIC POLYURETHANE PRIMER, (2) COATS.
   PAINT TO BE A HIGH GLOSS INDUSTRAL ENAMEL – WHITE, (2) COATS.
6. STANDING SEAM ROOFING TO MATCH ADMINISTRATION BUILDING STANDING SEAM ROOFING.
7. EXPOSED DOVETAILED METAL DECK TO BE PAINTED WHITE.
8. PRIME AND PAINT ALL EXTERIOR 8" CMU WALLS LIGHT GRAY.
   PRIME 1 COAT, PAINT 2 COATS MIN

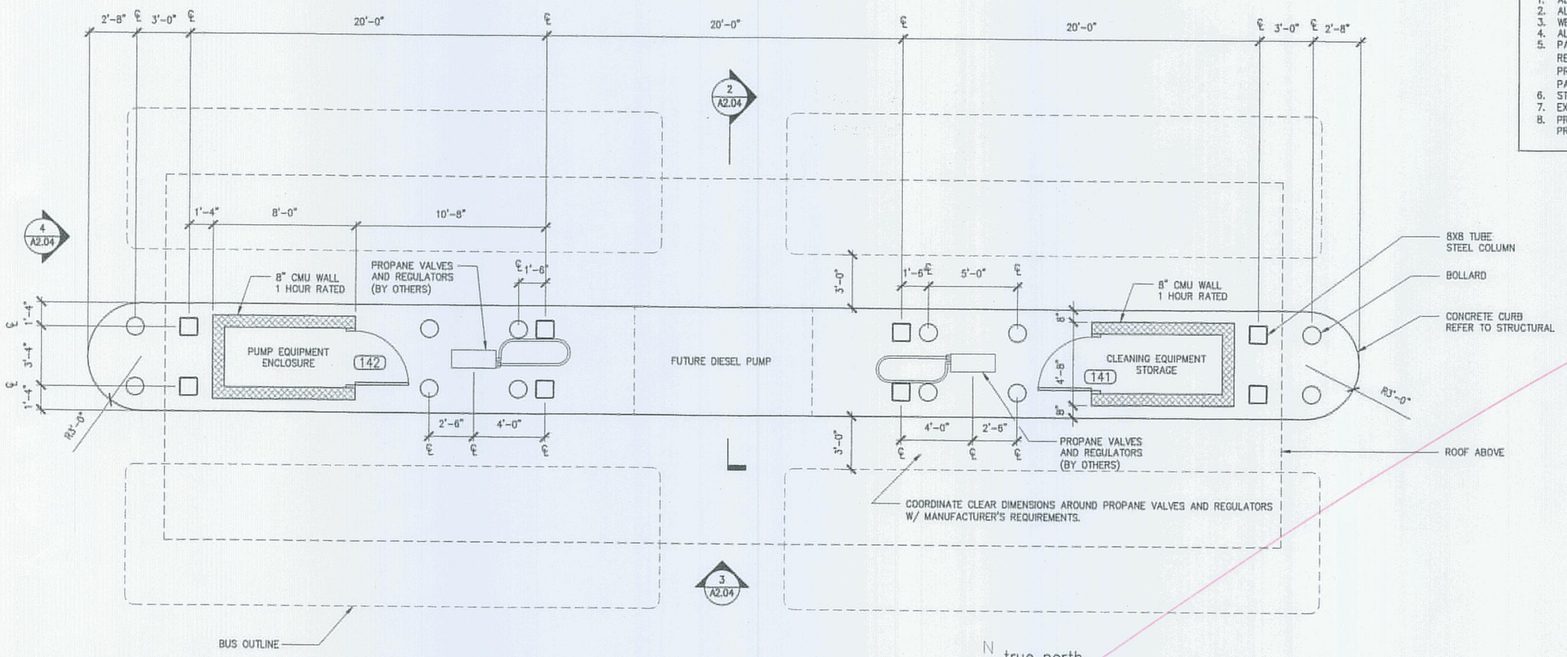


1 FUELING STATION FLOOR PLAN
1/4"=1'-0"

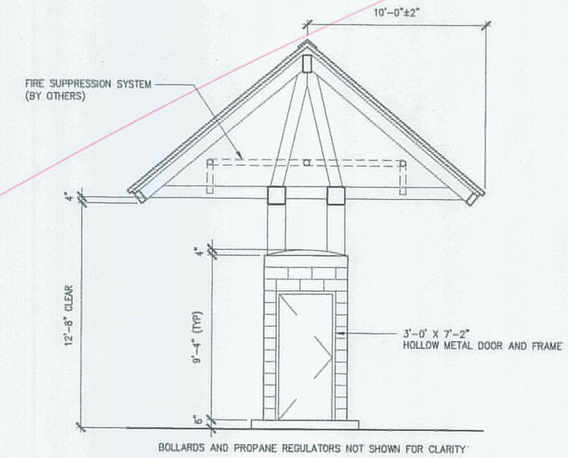


2 FUELING STATION SECTION
1/4"=1'-0"

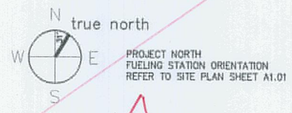


PROJECT NORTH
FUELING STATION ORIENTATION
REFER TO SITE PLAN SHEET A1.01

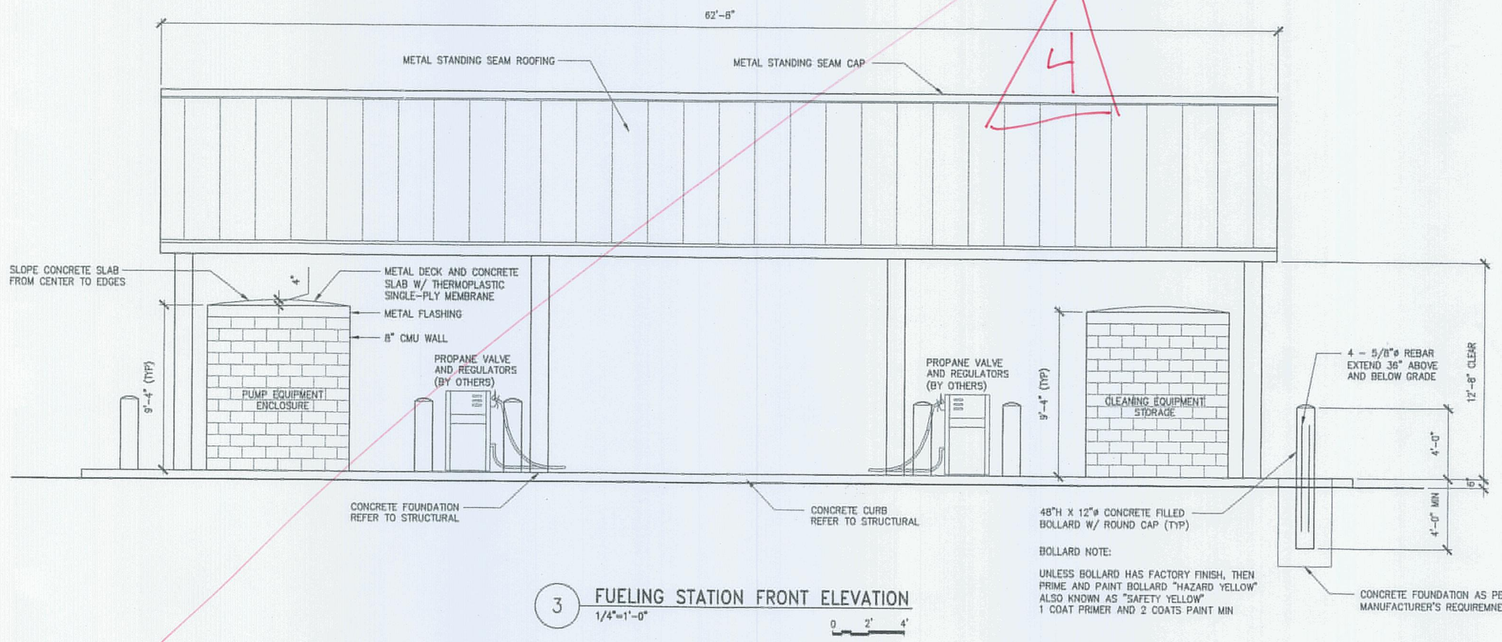


BOLLARD NOTE:

UNLESS BOLLARD HAS FACTORY FINISH, THEN PRIME AND PAINT BOLLARD "HAZARD YELLOW" ALSO KNOWN AS "SAFETY YELLOW"
1 COAT PRIMER AND 2 COATS PAINT MIN

3 FUELING STATION FRONT ELEVATION
1/4"=1'-0"

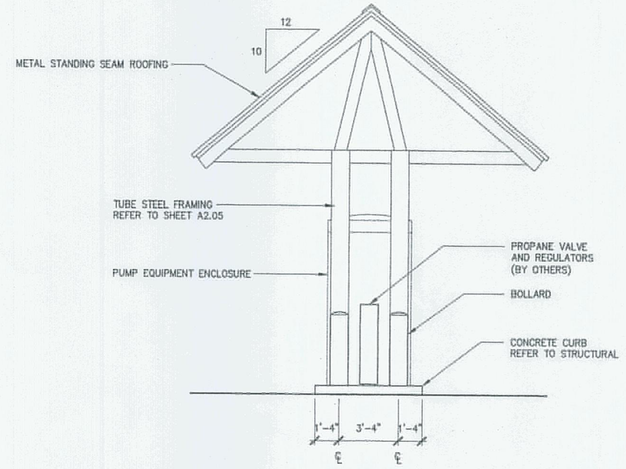


4 FUELING STATION SIDE ELEVATION
1/4"=1'-0"


AECOM USA, Inc.
66 Long Wharf
Boston, MA
T 617.723.1700 F 617.723.6856

AECOM
www.aecom.com

Allied Engineering
160 Veranda Street
Portland, Maine 04103
T:
F:
Web:


Allied Project No: 07010
Cad File: A2.04.dwg

STATE OF MAINE
DEPARTMENT OF TRANSPORTATION

| | DATE |
|---|---|
| FED PIN NO: | |
| PIN NO: 16123.50 | |

LICENSED ARCHITECT TERRY P. ROOKARD 3360 STATE OF MAINE

SIGNATURE
TERRY P. ROOKARD
ARCH. LIN. NUMBER
3360
DATE MAY 1, 2009

PROJECT INFORMATION

| | |
|---|---|
| PROGRAM | – |
| PROJECT MANAGER | WFF |
| DESIGNER | TV |
| CONSULTANT | ALLIED ENGINEERING |
| PROJECT RESIDENT | – |
| CONTRACTOR | – |
| PROJECT COMPLETION DATE | – |

MAINE DEPARTMENT OF TRANSPORTATION
ACADIA GATEWAY FACILITY
BUS MAINTENANCE FACILITY
FUELING STATION I

© COPYRIGHT 2007 ALLIED ENGINEERING, INC.

SHEET NUMBER
A2.04
OF 4

Filename: – Division: – Date: – Username: –
J:\PROJECTS\3700-Trenton\CADD\A\Sheet\A2.04.dwg Aug 04, 2009 - 12:36pm

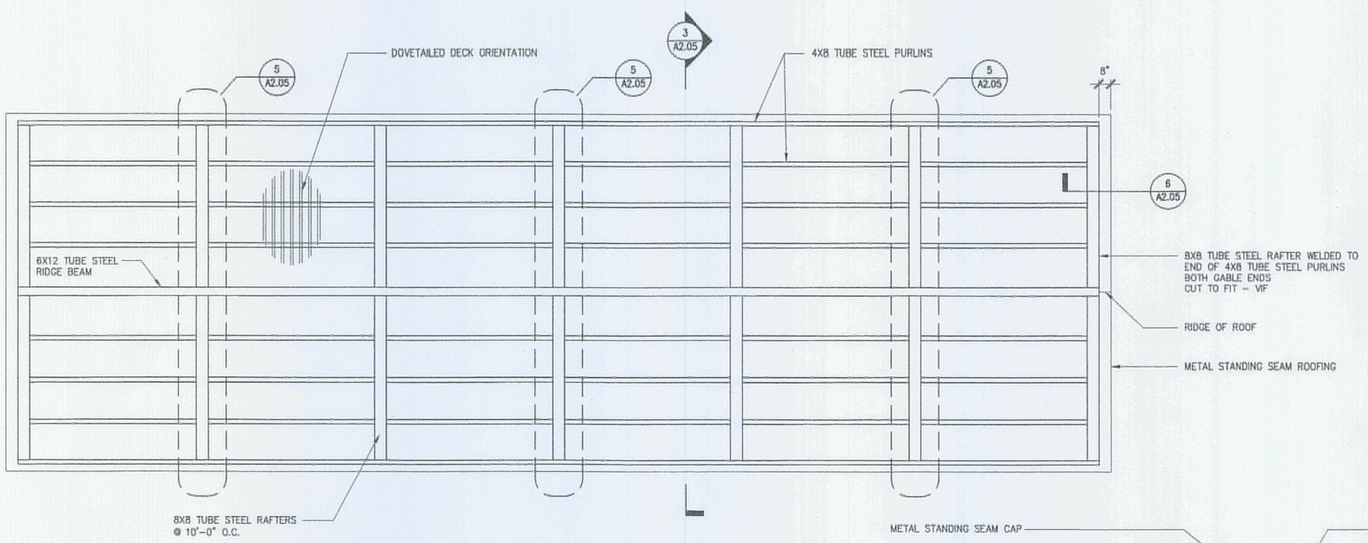


1 FUELING STATION ROOF FRAMING PLAN
1/4"=1'-0"

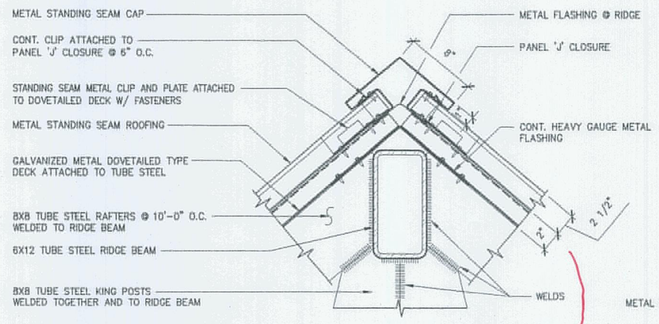


2 CAP DETAIL
1 1/2"=1'-0"

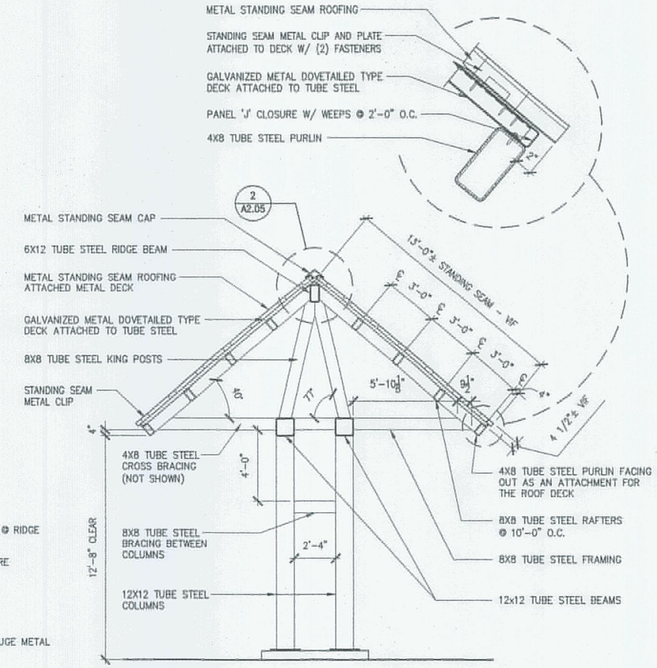


3 FUELING STATION SECTION
1/4"=1'-0"

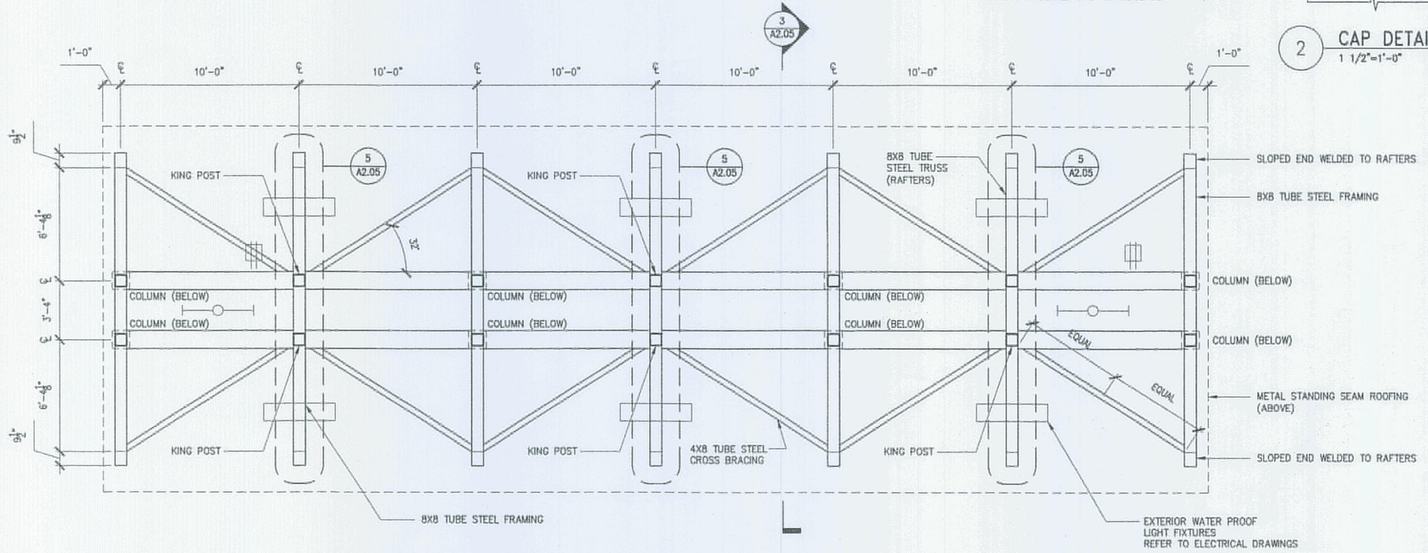


4 FUELING STATION ROOF FRAMING PLAN
1/4"=1'-0"

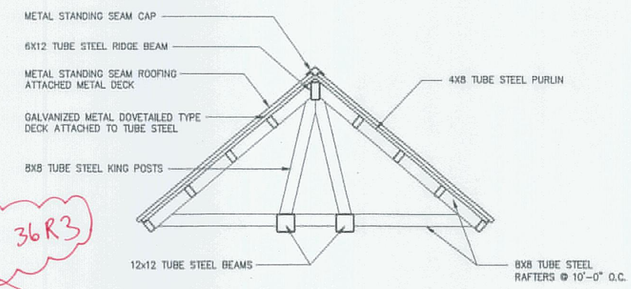


5 MID SPAN TRUSS
1/4"=1'-0"

SEE CP 36R3

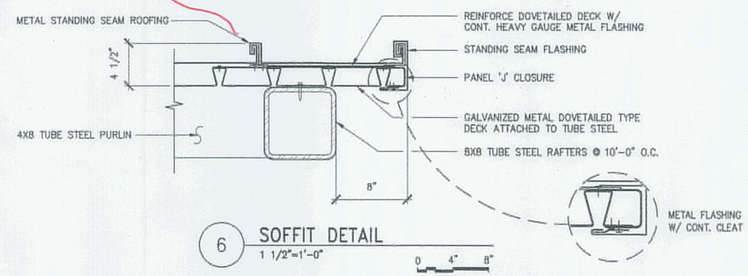


6 SOFFIT DETAIL
1 1/2"=1'-0"

AECOM USA, Inc.
66 Long Wharf
Boston, MA
T 617.723.1700 F 617.723.6856

AECOM
www.aecom.com

Allied Engineering
160 Veranda Street
Portland, Maine 04103
T:
F:
Web:

Allied Project No: 07010 | Cad File: A2.05.dwg

STATE OF MAINE
DEPARTMENT OF TRANSPORTATION

| | DATE |
|---|---|
| | |
| FED PIN NO: | |
| PIN NO: 16123.50 | |

LICENSED ARCHITECT TERRY P. ROOKARD No. 3360 STATE OF MAINE

| PROJECT INFORMATION | |
|---|---|
| PROGRAM | – |
| PROJECT MANAGER | WFF |
| DESIGNER | TV |
| CONSULTANT | ALLIED ENGINEERING |
| PROJECT RESIDENT | – |
| CONTRACTOR | – |
| PROJECT COMPLETION DATE | – |

SIGNATURE
TERRY P. ROOKARD
ARCH. LIN. NUMBER
3360
DATE MAY 1, 2009

MAINE DEPARTMENT OF TRANSPORTATION
ACADIA GATEWAY FACILITY
BUS MAINTENANCE FACILITY

FUELING STATION II

© COPYRIGHT 2007 ALLIED ENGINEERING, INC.

SHEET NUMBER
A2.05
OF

Filename: – Date: – Division: – Username: –
J:\PROJECTS\3700-Trenton\CAD\A\Sheet\A2.05.dwg Aug 04, 2009 - 12:36pm

BUS SHELTER NOTES:

1. ALL STEEL TO BE HOT-DIPPED GALVANIZED, EXCEPT FOR STANDING SEAM ROOFING.
2. ALL STRUCTURAL STEEL TO BE WELDED.
3. WELDS AT TUBE STEEL SHALL BE CONTINUOUS AROUND TUBE OPENINGS.
4. ALL WELDS SHALL BE GROUND SMOOTH AND RE-GALVANIZED.
5. PAINT ALL EXPOSED GALVANIZED STEEL.
   REFER TO PAINT MANUFACTURER'S REQUIREMENTS FOR PAINTING GALVANIZED METAL.
   PRIMER TO BE A MODIFIED AROMATIC POLYURETHANE PRIMER, (2) COATS.
   PAINT TO BE A HIGH GLOSS INDUSTRAL ENAMEL – WHITE, (2) COATS.
6. EXPOSED DOVETAILED METAL DECK TO BE PAINTED WHITE.
7. STANDING SEAM ROOFING TO MATCH ADMINISTRATION BUILDING STANDING SEAM ROOFING.
8. ALUMINUM STOREFRONT TO MATCH ADMINISTRATION BUILDING ALUMINUM STOREFRONT.
9. SPLIT FACE CMU TO MATCH ADMINISTRATION BUILDING SPLIT FACE CMU COLOR & TEXTURE.
11. SNOWGUARD, GUTTER AND DOWNSPOUT TO MATCH ADMINISTRATION BUILDING SNOWGUARD, GUTTER AND DOWNSPOUT.
12. REFER TO SPECIFICATIONS.

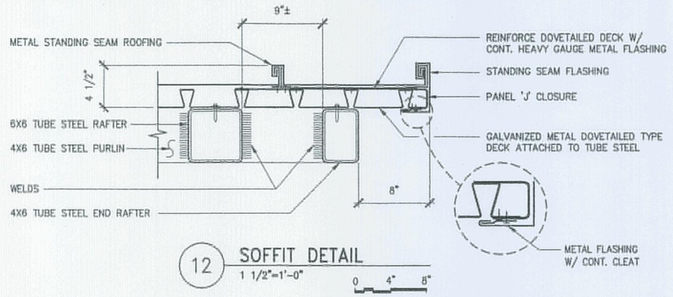


12 SOFFIT DETAIL
1 1/2"=1'-0"

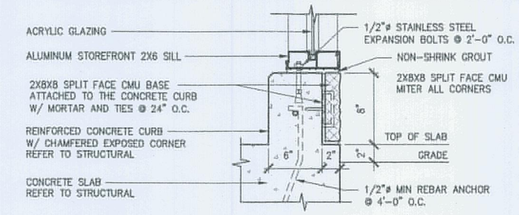


14 CMU SILL DETAIL
1 1/2"=1'-0"

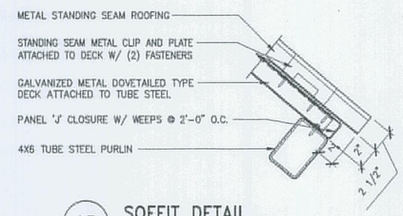


13 SOFFIT DETAIL
1 1/2"=1'-0"

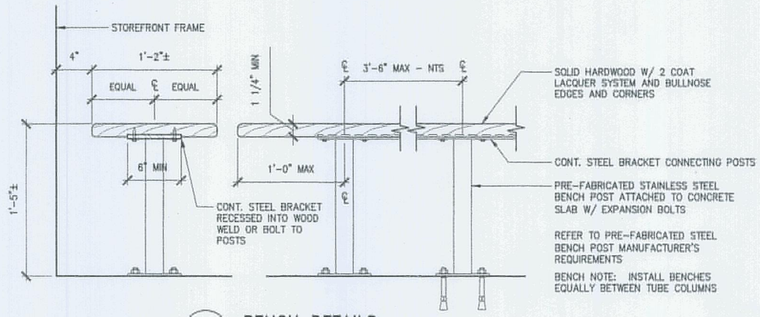


11 BENCH DETAILS
1 1/2"=1'-0"

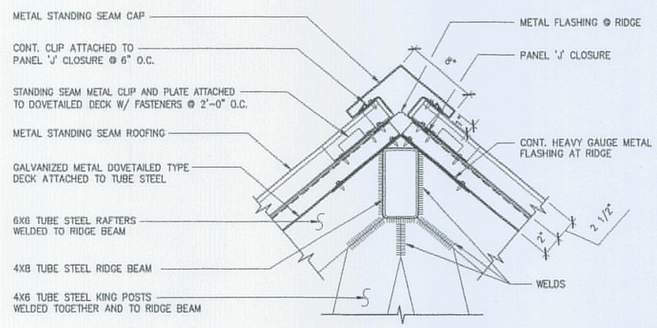


10 CAP DETAIL
1 1/2"=1'-0"

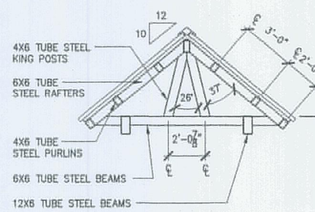


9 MIDDLE FRAME SECTION
1/4"=1'-0"

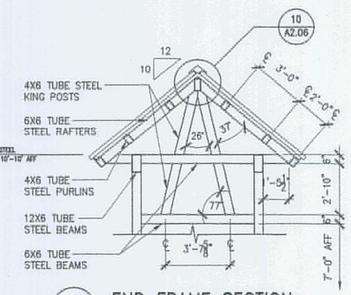


8 END FRAME SECTION
1/4"=1'-0"

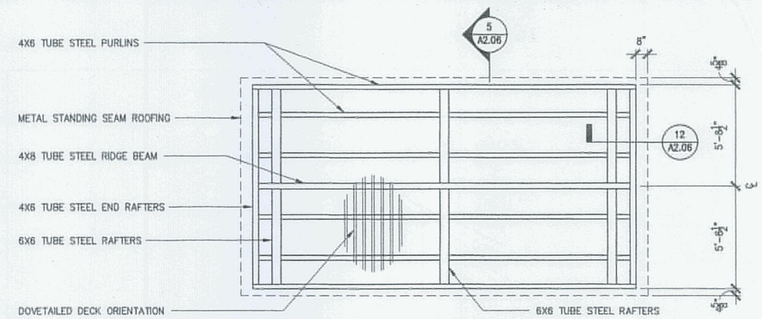


4 BUS SHELTER ROOF FRAMING PLAN
1/4"=1'-0"

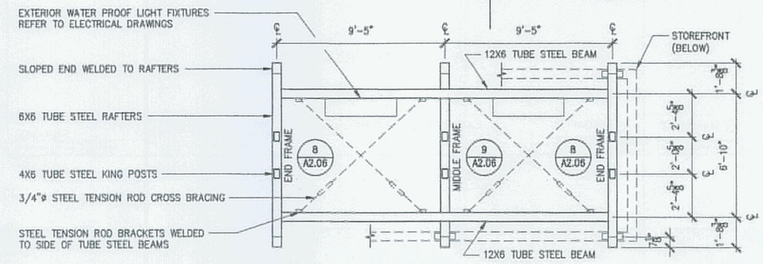


3 BUS SHELTER FRAMING PLAN II
1/4"=1'-0"

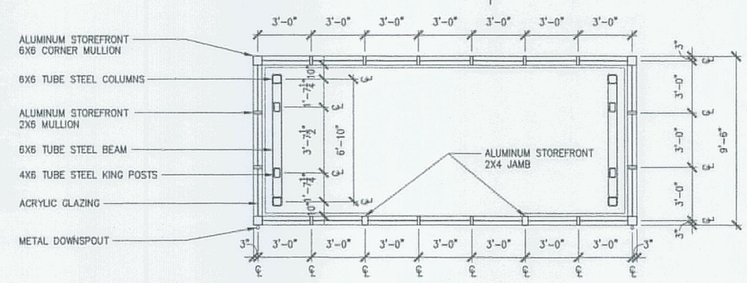


2 BUS SHELTER FRAMING PLAN I
1/4"=1'-0"

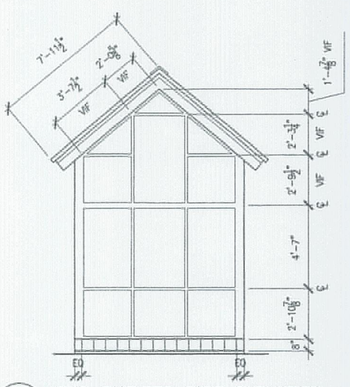

7 BUS SHELTER SIDE ELEVATION
1/4"=1'-0"

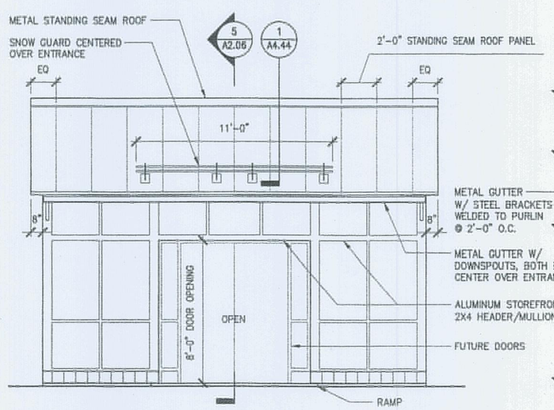


6 BUS SHELTER FRONT ELEVATION
1/4"=1'-0"
BUS SHELTER REAR ELEVATION SIMILAR

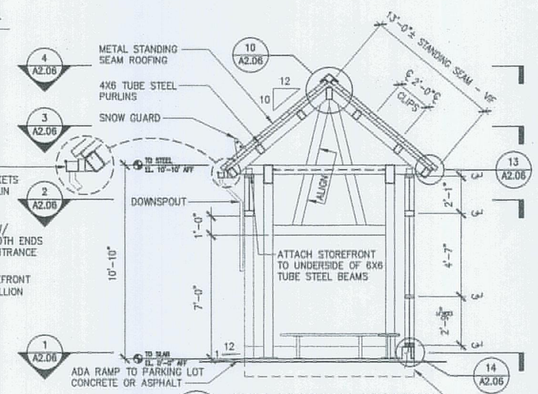


5 BUS SHELTER SECTION
1/4"=1'-0"

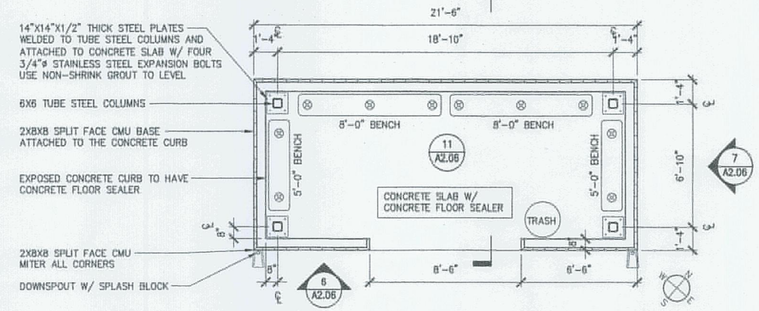


1 BUS SHELTER FLOOR PLAN
1/4"=1'-0"

TRUE NORTH
BUS SHELTER ORIENTATION REFER TO SITE PLAN SHEET A1.01

AECOM
AECOM USA, Inc.
66 Long Wharf
Boston, MA
T 617.723.1700 F 617.723.6856
www.aecom.com

Allied Engineering
160 Veranda Street
Portland, Maine 04103
T:
F:
Web:
Allied Project No: 07010
Cad File: A2.06.dwg

STATE OF MAINE
DEPARTMENT OF TRANSPORTATION
DATE
FED PIN NO:
PIN NO: 16129.50

LICENSED ARCHITECT TERRY P. ROOKARD No. 3360 STATE OF MAINE

SIGNATURE
TERRY P. ROOKARD
ARCH. LIN. NUMBER
3360
DATE MAY 1, 2009

| PROJECT INFORMATION | |
|---|---|
| PROGRAM | – |
| PROJECT MANAGER | WPP |
| DESIGNER | TV |
| CONSULTANT | ALLIED ENGINEERING |
| PROJECT RESIDENT | – |
| CONTRACTOR | – |
| PROJECT COMPLETION DATE | – |

MAINE DEPARTMENT OF TRANSPORTATION
ACADIA GATEWAY FACILITY
BUS MAINTENANCE FACILITY
BUS SHELTER

© COPYRIGHT 2007 ALLIED ENGINEERING, INC.

SHEET NUMBER
A2.06
OF

Filename: – Division: – Date: – Username: –
J:\PROJECTS\3700-Trenton\CAD\A\Sheet\A2.06.dwg Aug 04, 2009 - 12:36pm

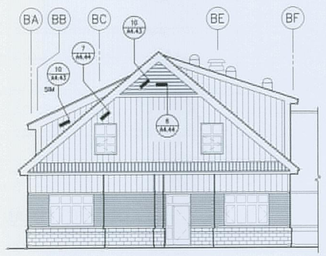


3 SOUTHWEST ELEVATION (ADMIN. BLDG.)
1/8"=1'-0"

0 4' 8'

MaineDOT
Maine Department of Transportation
TRANSTON, MAINE

AECOM
AECOM USA, OF MASSACHUSETTS, INC.
66 LONG WHARF BOSTON, MASSACHUSETTS 02110
T: (617) 723-1700 F: (617) 742-0447

EXTERIOR ELEVATION

Allied Engineering
149 Veranda Street
Portland, Maine 04103
P: (207) 772-2891
F: (207) 772-3580
Web: www.alliedeng.com

SCALE: 1/8" = 1'-0"
REVISED DATE/SHEET: A3.01
DATE: 12/23/10
BY: PR
DWG. NO.: SKA-04E
ACADIA GATEWAY FACILITY
MAINE DEPARTMENT OF TRANSPORTATION
MAINE DEPARTMENT OF TRANSPORTATION

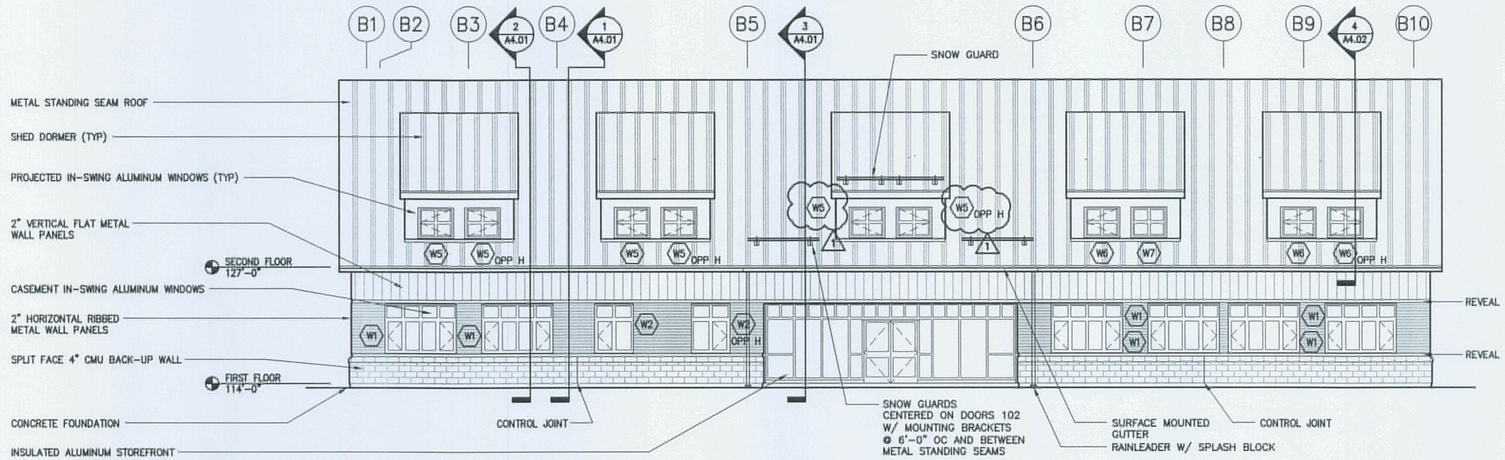


1 SOUTH EAST ELEVATION (ADMIN. BLDG.)
1/8"=1'-0"
0 4' 8'

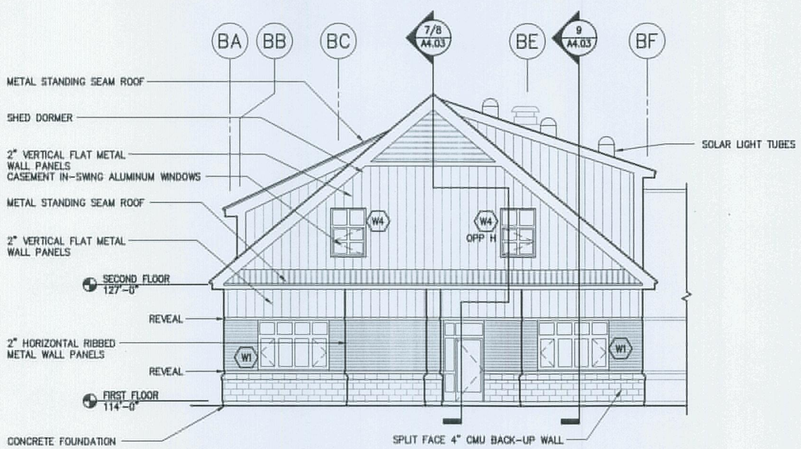


2 NORTHEAST ELEVATION (ADMIN. BLDG.)
1/8"=1'-0"
0 4' 8'

SEE SKA-04E

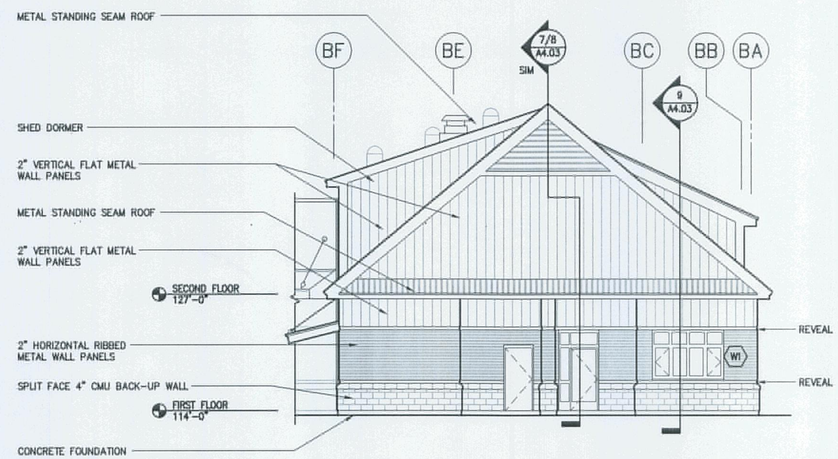


3 SOUTHWEST ELEVATION (ADMIN. BLDG.)
1/8"=1'-0"
0 4' 8'

SEE SKA-04E

EXTERIOR ELEVATION NOTE:

EXTERIOR ELEVATIONS ARE SCHEMATIC AND MAY BE IN CONFLICT WITH OTHER DRAWINGS. REFER TO PLANS, WALL SECTIONS AND DETAILS FOR ACCURATE DESIGN AND DIMENSIONS.

| REVISION NO. | REVISION DATE | DESCRIPTIONS |
|---|---|---|
| 1 | 10/29/09 | AMENDMENT NO 4 |


AECOM USA, Inc.
66 Long Wharf
Boston, MA
T 617.723.1700 F 617.723.6856

AECOM
www.aecom.com

Allied Engineering
160 Veranda Street
Portland, Maine 04103
T: 207.221.2260
F: 207.221.2266
Web: www.allied-eng.com


Allied Project No: 07010
Cad File: A3.01.dwg

STATE OF MAINE
DEPARTMENT OF TRANSPORTATION

| DATE | |
|---|---|
| | |

FED PIN NO:
PIN NO: 16123.50

LICENSED ARCHITECT TERRY P. ROOKARD No. 3360 STATE OF MAINE

| PROJECT INFORMATION | |
|---|---|
| PROGRAM | - |
| PROJECT MANAGER | WPP |
| DESIGNER | TV |
| CONSULTANT | ALLIED ENGINEERING |
| PROJECT RESIDENT | - |
| CONTRACTOR | - |
| PROJECT COMPLETION DATE | - |

SIGNATURE
TERRY P. ROOKARD
ARCH. LIN. NUMBER
3360
DATE MAY 1, 2009

MAINE DEPARTMENT OF TRANSPORTATION
ACADIA GATEWAY FACILITY
BUS MAINTENANCE FACILITY

EXTERIOR ELEVATIONS I
ADMINISTRATION BUILDING

© COPYRIGHT 2007 ALLIED ENGINEERING, INC.

SHEET NUMBER
A3.01
OF

Filename: - Date: - Division: - Username: -

J:\PROJECTS\3700-Trenton\CAD\A\Sheet\A3.01.dwg Oct 27, 2009 - 11:53am

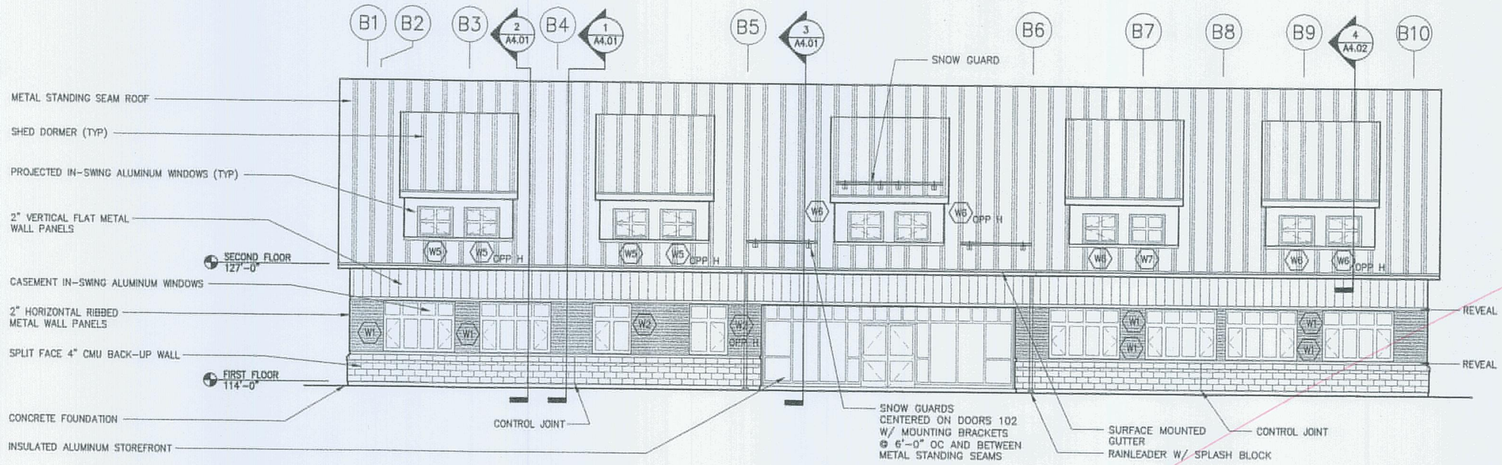


1 SOUTH EAST ELEVATION (ADMIN. BLDG.)
1/8"=1'-0"
0 4' 8'

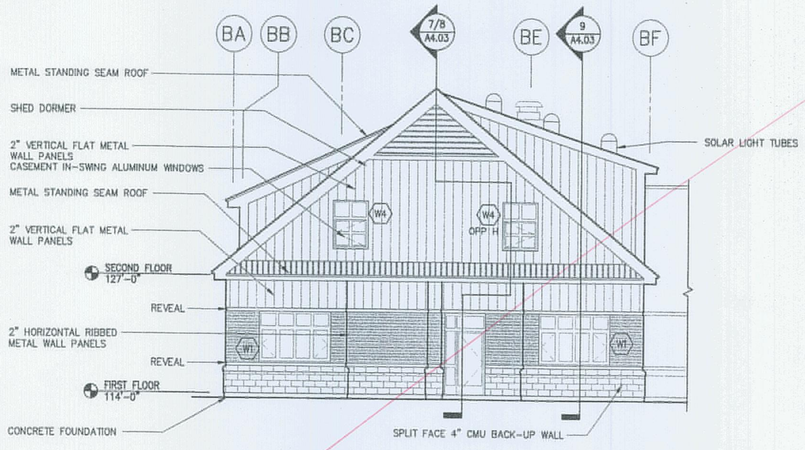


2 NORTHEAST ELEVATION (ADMIN. BLDG.)
1/8"=1'-0"
0 4' 8'

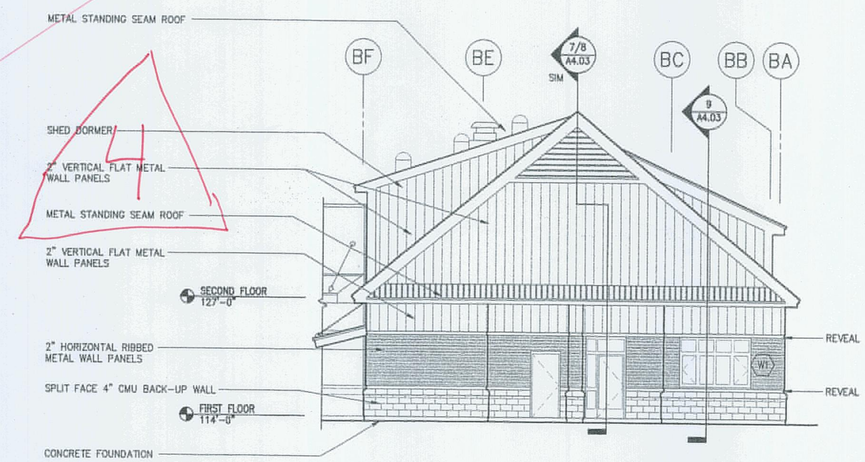


3 SOUTHWEST ELEVATION (ADMIN. BLDG.)
1/8"=1'-0"
0 4' 8'

EXTERIOR ELEVATION NOTE:

EXTERIOR ELEVATIONS ARE SCHEMATIC AND MAY BE IN CONFLICT WITH OTHER DRAWINGS. REFER TO PLANS, WALL SECTIONS AND DETAILS FOR ACCURATE DESIGN AND DIMENSIONS.


AECOM

AECOM USA, Inc.
66 Long Wharf
Boston, MA
T 617.723.1700 F 617.723.6856

www.aecom.com

Allied Engineering

160 Veranda Street
Portland, Maine 04103
T:
F:
Web:


Allied Project No: 07010

Cad File: A3.01.dwg

STATE OF MAINE
DEPARTMENT OF TRANSPORTATION

| DATE | |
|---|---|
| | |

FED PIN NO:

PIN NO: 16123.50

LICENSED ARCHITECT TERRY P. ROOKARD No. 3360 STATE OF MAINE

| PROJECT INFORMATION | |
|---|---|
| PROGRAM | - |
| PROJECT MANAGER | WPP |
| DESIGNER | TV |
| CONSULTANT | ALLIED ENGINEERING |
| PROJECT RESIDENT | - |
| CONTRACTOR | - |
| PROJECT COMPLETION DATE | - |

SIGNATURE
TERRY P. ROOKARD
ARCH. LIN. NUMBER
3360
DATE
MAY 1, 2009

MAINE DEPARTMENT OF TRANSPORTATION
ACADIA GATEWAY FACILITY
BUS MAINTENANCE FACILITY

EXTERIOR ELEVATIONS I
ADMINISTRATION BUILDING

© COPYRIGHT 2007 ALLIED ENGINEERING, INC.

SHEET NUMBER
A3.01
OF 4

Filename: - Date: - Division: - Username: -

J:\PROJECTS\37700-Trenton\CAD\A\Sheet\A3.01.dwg Aug 04, 2009 - 12:36pm

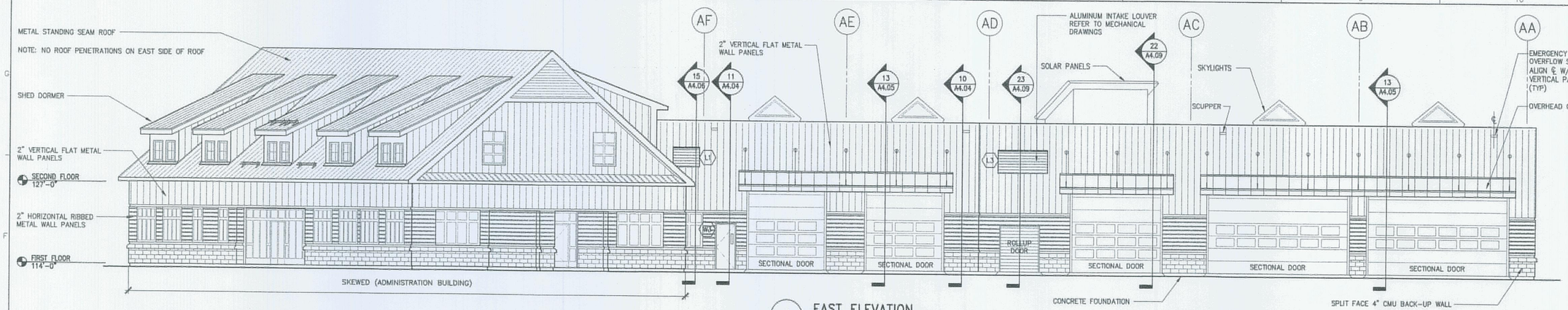


1 EAST ELEVATION
1/8"=1'-0"

NOTE: BOLLARDS NOT SHOWN FOR CLARITY. REFER TO ENLARGED PLANS FOR BOLLARD LOCATIONS.

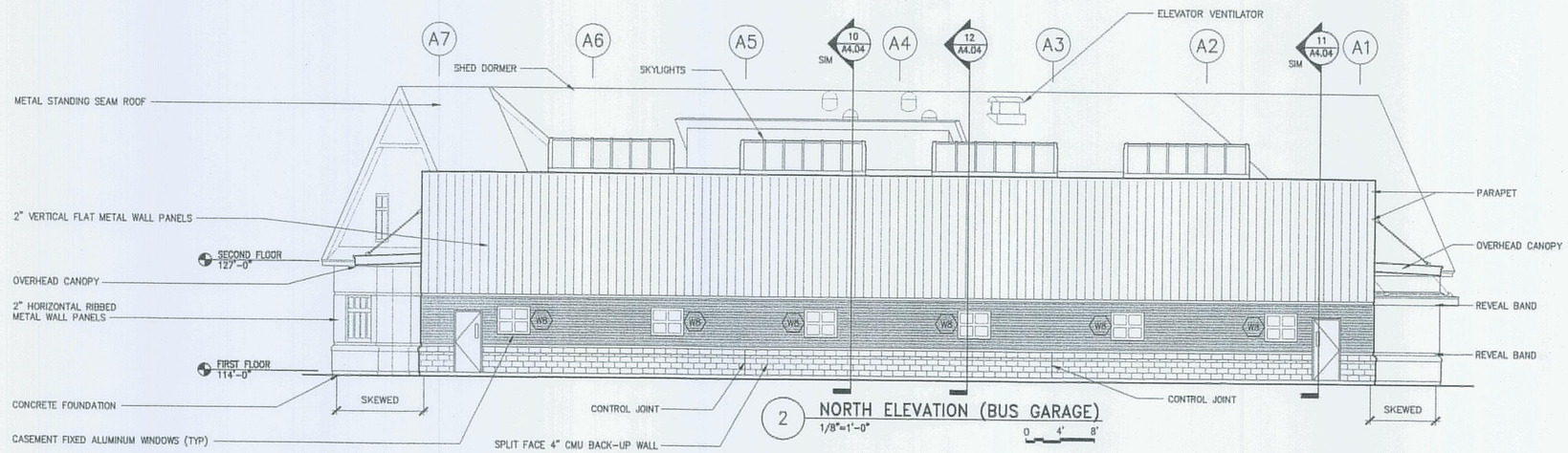


2 NORTH ELEVATION (BUS GARAGE)
1/8"=1'-0"

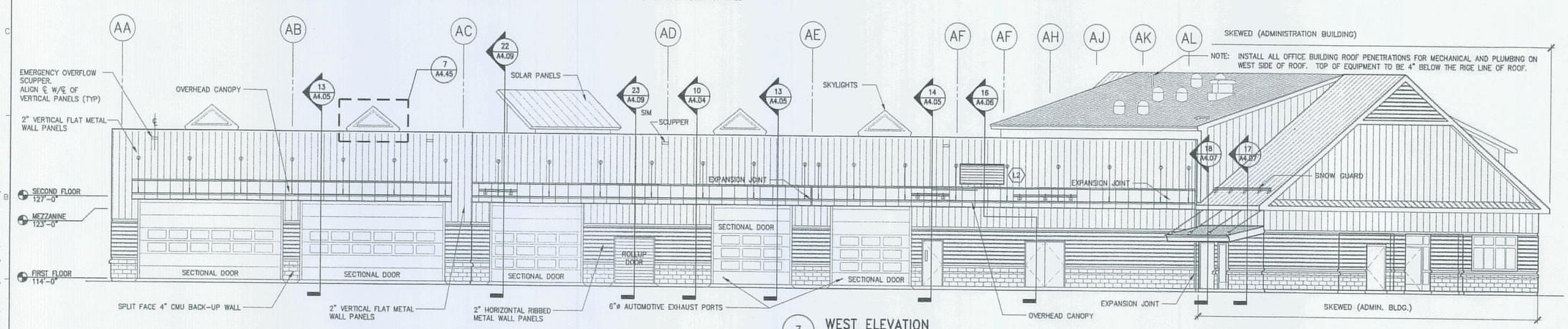


3 WEST ELEVATION
1/8"=1'-0"

NOTE: BOLLARDS NOT SHOWN FOR CLARITY. REFER TO ENLARGED PLANS FOR BOLLARD LOCATIONS.

EXTERIOR ELEVATION NOTE:

EXTERIOR ELEVATIONS ARE SCHEMATIC AND MAY BE IN CONFLICT WITH OTHER DRAWINGS. REFER TO PLANS, WALL SECTIONS AND DETAILS FOR ACCURATE DESIGN AND DIMENSIONS.


AECOM USA, Inc.
66 Long Wharf
Boston, MA
T 617.723.1700 F 617.723.6856

AECOM
www.aecom.com

Allied Engineering
160 Veranda Street
Portland, Maine 04103
T:
F:
Web:


Allied Project No: 07010 | Cad File: A3.02.dwg

STATE OF MAINE
DEPARTMENT OF TRANSPORTATION

| DATE | |
|---|---|
| FED PIN NO: | |
| PIN NO: 16123.50 | |

LICENSED ARCHITECT TERRY P. ROOKARD No. 3360 STATE OF MAINE

| PROJECT INFORMATION | |
|---|---|
| PROGRAM | – |
| PROJECT MANAGER | WPF |
| DESIGNER | TY |
| CONSULTANT | ALLIED ENGINEERING |
| PROJECT RESIDENT | – |
| CONTRACTOR | – |
| PROJECT COMPLETION DATE | – |

SIGNATURE
TERRY P. ROOKARD
ARCH. LIN. NUMBER
3360
DATE MAY 1, 2009

MAINE DEPARTMENT OF TRANSPORTATION
ACADIA GATEWAY FACILITY
BUS MAINTENANCE FACILITY

EXTERIOR ELEVATIONS II
GARAGE

© COPYRIGHT 2007 ALLIED ENGINEERING, INC.

SHEET NUMBER
A3.02
OF

Filename: - Date: - Division: - Username: -
J:\PROJECTS\3700-Trenton\CAD\A\Sheet\A3.02.dwg Aug 04, 2009 - 12:36pm

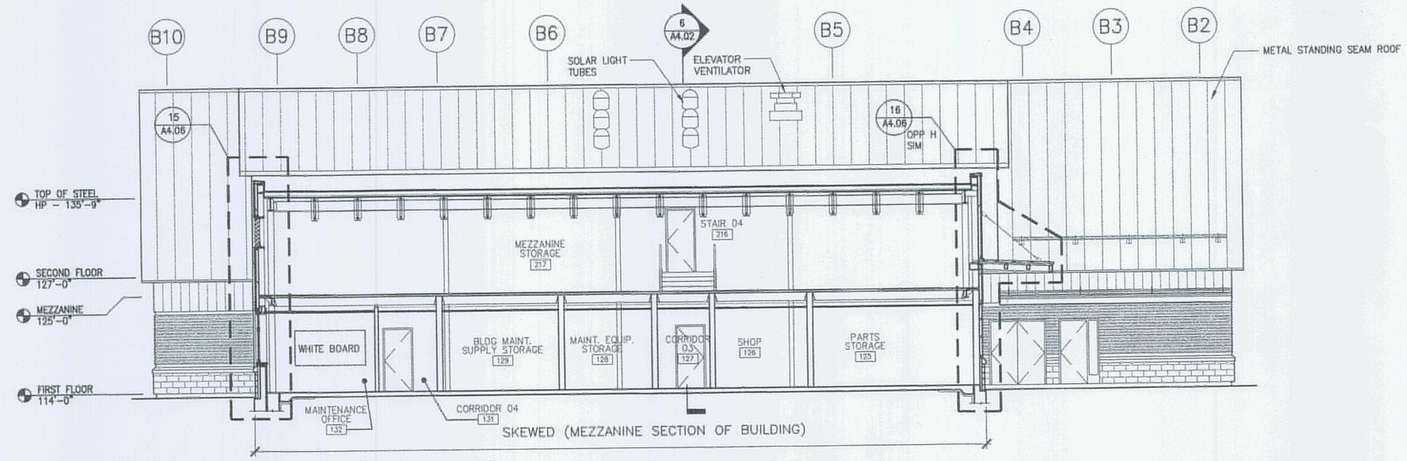


1 BUILDING SECTION – COLUMN LINE AG
1/8"=1'-0"

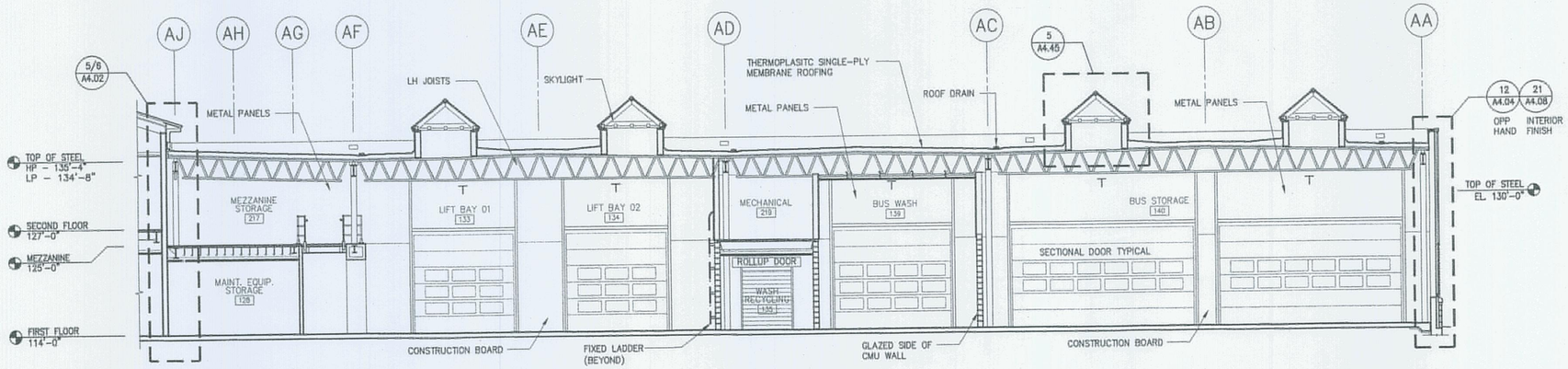


2 BUILDING SECTION – COLUMN LINE A4
1/8"=1'-0"

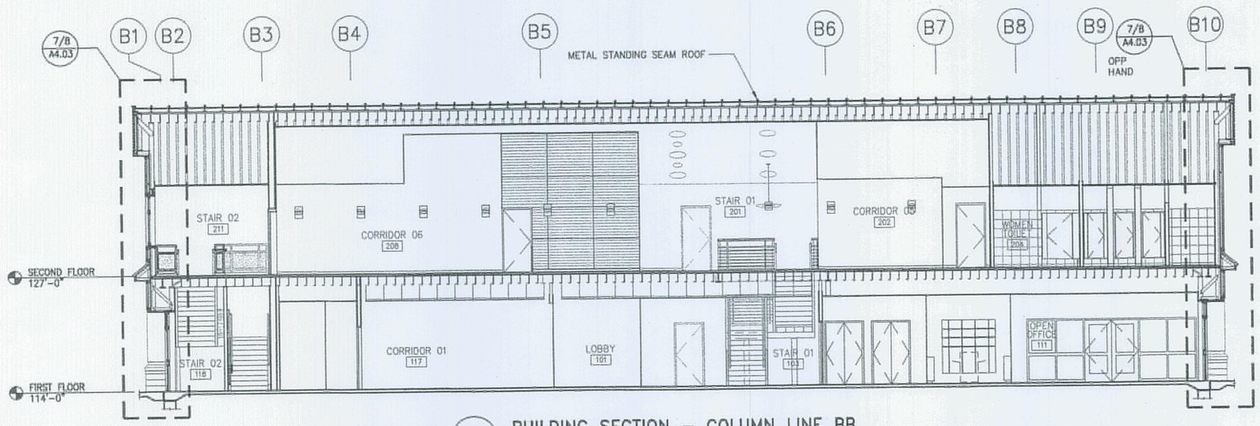


3 BUILDING SECTION – COLUMN LINE BB
1/8"=1'-0"

BUILDING SECTION NOTE:

BUILDING SECTIONS ARE SCHEMATIC AND MAY BE IN CONFLICT WITH OTHER DRAWINGS.
REFER TO PLANS, WALL SECTIONS AND DETAILS FOR ACCURATE DESIGN AND DIMENSIONS.


AECOM USA, Inc.
66 Long Wharf
Boston, MA
T 617.723.1700 F 617.723.6856

AECOM
www.aecom.com

Allied Engineering
160 Veranda Street
Portland, Maine 04103
T:
F:
Web:


Allied Project No: 07010
Cad File: A3.03dwg

STATE OF MAINE
DEPARTMENT OF TRANSPORTATION

| DATE |
|---|
| |

FED PIN NO:
PIN NO: 16123.50

LICENSED ARCHITECT TERRY P. ROOKARD No. 3360 STATE OF MAINE

| PROJECT INFORMATION | |
|---|---|
| PROGRAM | - |
| PROJECT MANAGER | WPP |
| DESIGNER | TV |
| CONSULTANT | ALLIED ENGINEERING |
| PROJECT RESIDENT | - |
| CONTRACTOR | - |
| PROJECT COMPLETION DATE | - |

SIGNATURE
TERRY P. ROOKARD
ARCH. LIC. NUMBER
3360
DATE MAY 1, 2009

MAINE DEPARTMENT OF TRANSPORTATION
ACADIA GATEWAY FACILITY
BUS MAINTENANCE FACILITY

BUILDING SECTIONS I

© COPYRIGHT 2007 ALLIED ENGINEERING, INC.

SHEET NUMBER
A3.03
OF

Filename: -
Date: -
Division: -
Username: -
J:\PROJECTS\3700-Trenton\CAD\A\Sheet\A3.03.dwg Aug 04, 2009 - 12:36pm

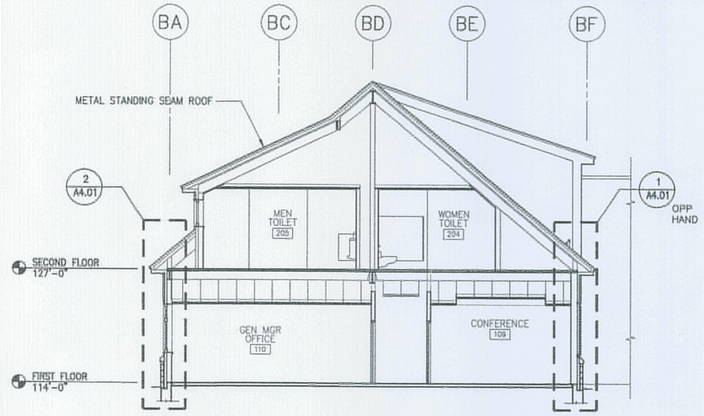


1 BUILDING SECTION – OFFICE / LAVATORIES
1/8"=1'-0"

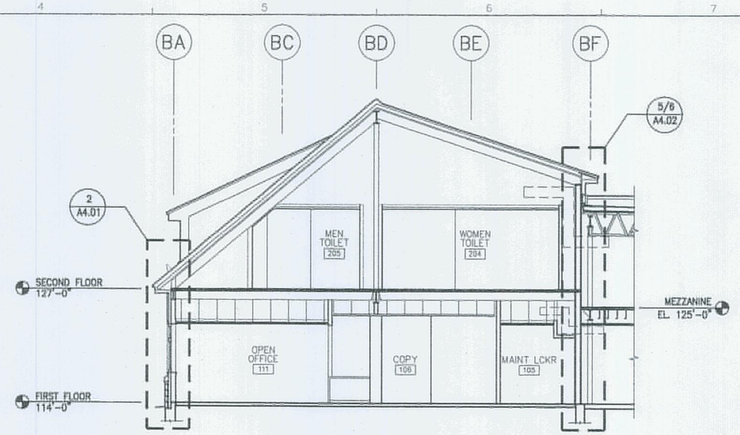


2 BUILDING SECTION – OFFICE / LAVATORIES
1/8"=1'-0"

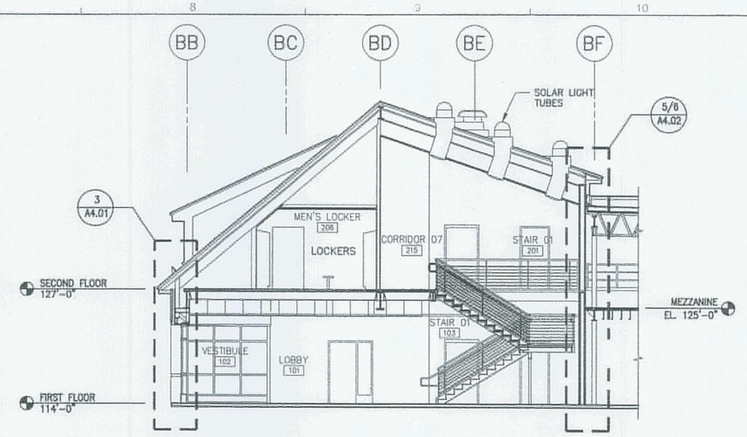


3 BUILDING SECTION – LOBBY AND STAIR
1/8"=1'-0"

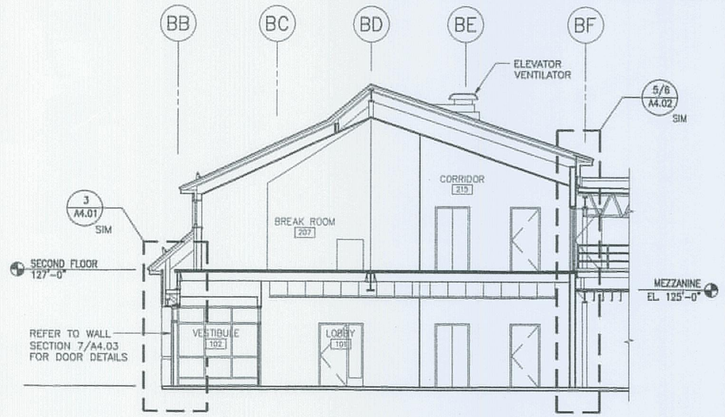


4 BUILDING SECTION – LOBBY / BREAK ROOM
1/8"=1'-0"

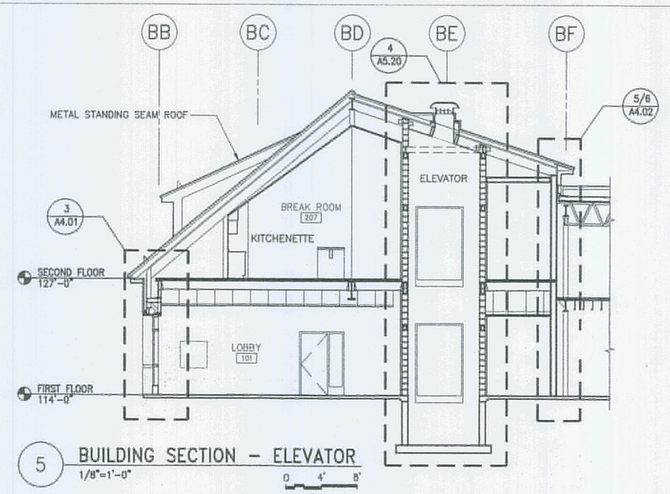


5 BUILDING SECTION – ELEVATOR
1/8"=1'-0"

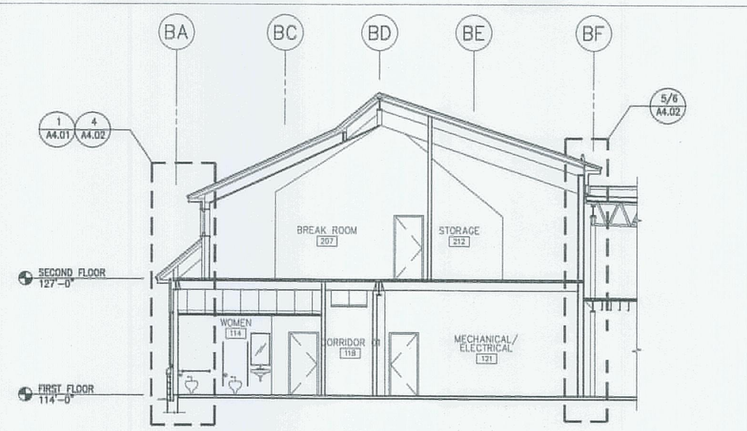


6 BUILDING SECTION – TOILETS / BREAK ROOM
1/8"=1'-0"

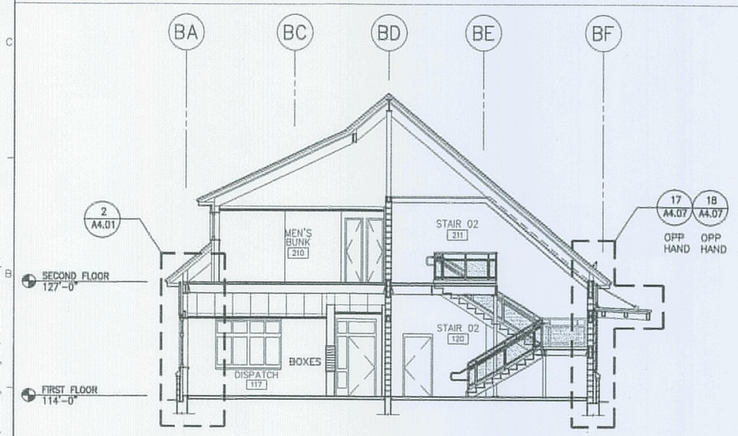


7 BUILDING SECTION – EMERGENCY STAIR / BUNK ROOMS
1/8"=1'-0"

BUILDING SECTION NOTE:

BUILDING SECTIONS ARE SCHEMATIC AND MAY BE IN CONFLICT WITH OTHER DRAWINGS.
REFER TO PLANS, WALL SECTIONS AND DETAILS FOR ACCURATE DESIGN AND DIMENSIONS.

AECOM USA, Inc.
66 Long Wharf
Boston, MA
T 617.723.1700 F 617.723.6856

AECOM
www.aecom.com

Allied Engineering
160 Veranda Street
Portland, Maine 04103
T:
F:
Web:

Allied Project No: 07010
Cad File: A3.04.dwg

STATE OF MAINE
DEPARTMENT OF TRANSPORTATION

| | DATE |
|---|---|
| FED PIN NO: | |
| PIN NO: 16123.50 | |

LICENSED ARCHITECT TERRY P. ROOKARD No. 3360 STATE OF MAINE

| PROJECT INFORMATION | |
|---|---|
| PROGRAM | - |
| PROJECT MANAGER | WPP |
| DESIGNER | TV |
| CONSULTANT | ALLIED ENGINEERING |
| PROJECT RESIDENT | - |
| CONTRACTOR | - |
| PROJECT COMPLETION DATE | - |

SIGNATURE
TERRY P. ROOKARD
ARCH. LIN. NUMBER
3360
DATE MAY 1, 2009

MAINE DEPARTMENT OF TRANSPORTATION
ACADIA GATEWAY FACILITY
BUS MAINTENANCE FACILITY

BUILDING SECTIONS II

© COPYRIGHT 2007 ALLIED ENGINEERING, INC.

SHEET NUMBER
A3.04
OF

Filename: - Date: - Division: - Username: -
J:\PROJECTS\3700-Trenton\CAD\A\Sheet\A3.04.dwg Aug 04, 2009 - 12:37pm

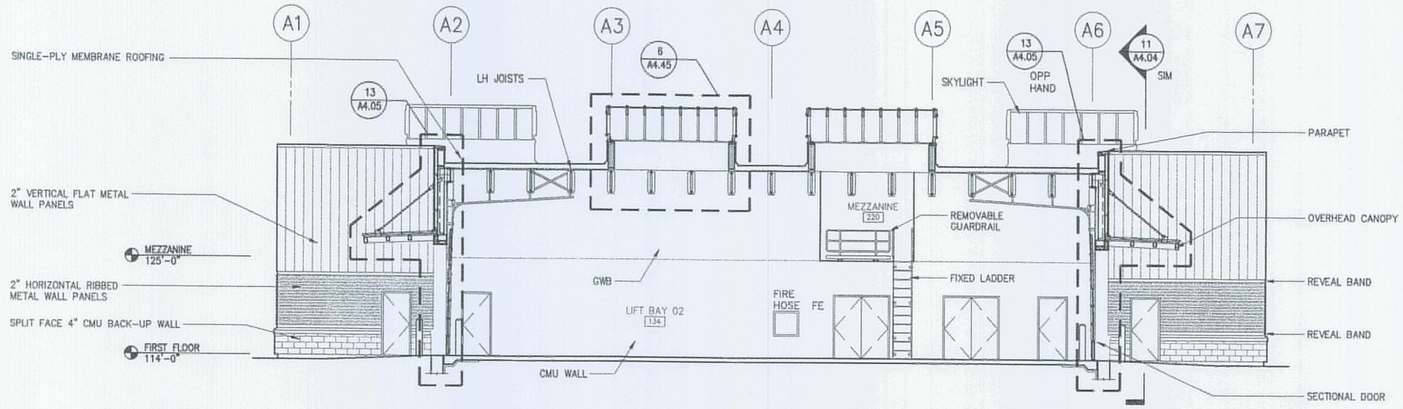


1 BUILDING SECTION – LIFT BAYS
1/8"=1'-0"
0 4' 8'

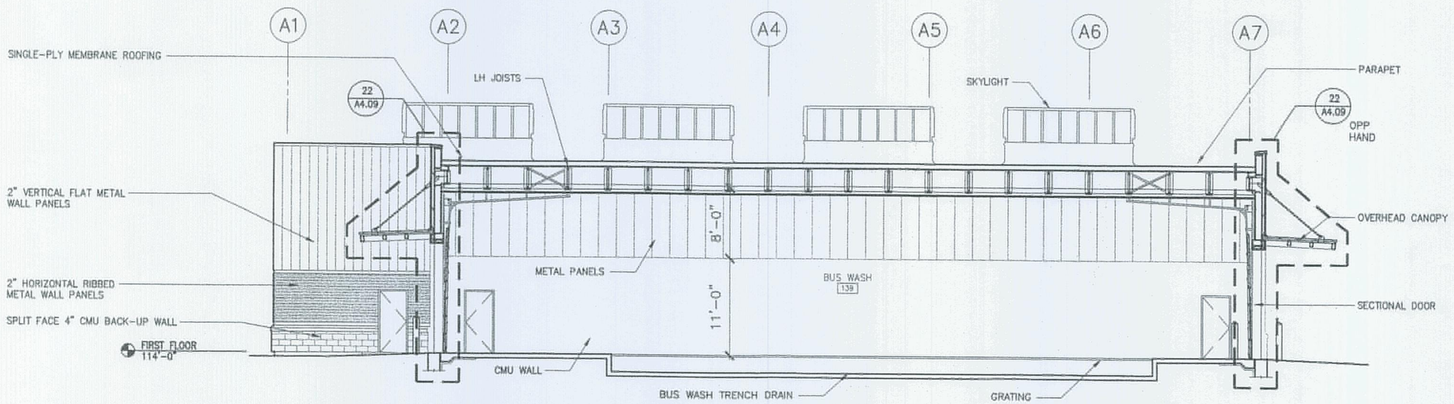


2 BUILDING SECTION – BUS WASH
1/8"=1'-0"
0 4' 8'

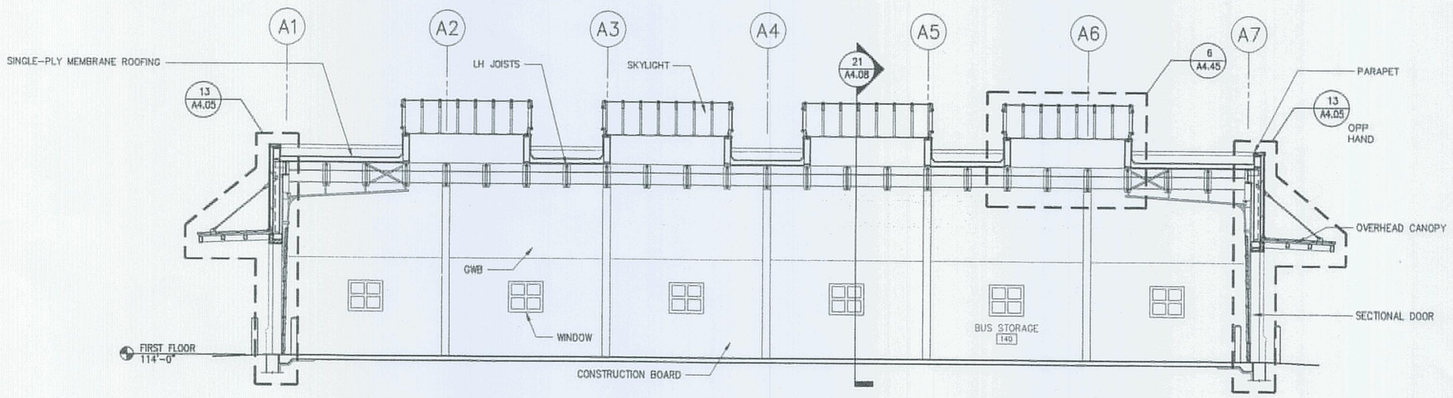


3 BUILDING SECTION – BUS STORAGE
1/8"=1'-0"
0 4' 8'

BUILDING SECTION NOTE:

BUILDING SECTIONS ARE SCHEMATIC AND MAY BE IN CONFLICT WITH OTHER DRAWINGS.
REFER TO PLANS, WALL SECTIONS AND DETAILS FOR ACCURATE DESIGN AND DIMENSIONS.


AECOM USA, Inc.
66 Long Wharf
Boston, MA
T 617.723.1700 F 617.723.6856

AECOM
www.aecom.com

Allied Engineering
160 Veranda Street
Portland, Maine 04103
T:
F:
Web:


Allied Project No: 07010
Cad File: A3.05.dwg

STATE OF MAINE
DEPARTMENT OF TRANSPORTATION

| | DATE |
|---|---|
| | |
| FED PIN NO: | |
| PIN NO: 16123.50 | |

LICENSED ARCHITECT TERRY P. ROOKARD No. 3360 STATE OF MAINE

| PROJECT INFORMATION | |
|---|---|
| PROGRAM | - |
| PROJECT MANAGER | WPF |
| DESIGNER | TV |
| CONSULTANT | ALLIED ENGINEERING |
| PROJECT RESIDENT | - |
| CONTRACTOR | - |
| PROJECT COMPLETION DATE | - |

SIGNATURE
TERRY P. ROOKARD
ARCH. LIN. NUMBER
3360
DATE MAY 1, 2009

MAINE DEPARTMENT OF TRANSPORTATION
ACADIA GATEWAY FACILITY
BUS MAINTENANCE FACILITY
BUILDING SECTIONS III

© COPYRIGHT 2007 ALLIED ENGINEERING, INC.

SHEET NUMBER
A3.05
OF

Filename: - Date: - Division: - Username: -
J:\PROJECTS\3750-Trenton\CAD\A\Sheet\A3.05.dwg Aug 04, 2009 - 12:37pm

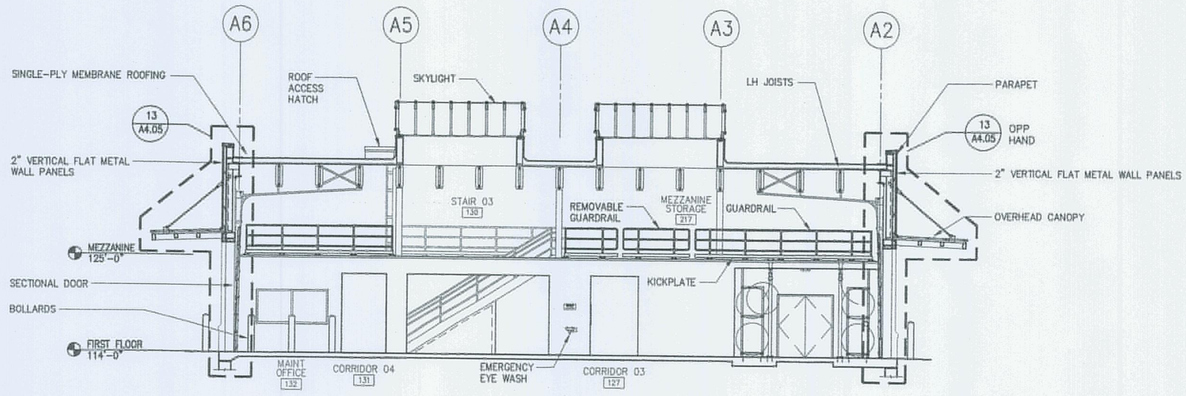


1 BUILDING SECTION – LIFT BAYS
1/8"=1'-0"
0 4' 8'

BUILDING SECTION NOTE:

BUILDING SECTIONS ARE SCHEMATIC AND MAY BE IN CONFLICT WITH OTHER DRAWINGS. REFER TO PLANS, WALL SECTIONS AND DETAILS FOR ACCURATE DESIGN AND DIMENSIONS.

AECOM USA, Inc.
86 Long Wharf
Boston, MA
T 617.723.1700 F 617.723.6656
AECOM
www.aecom.com

Allied Engineering
160 Veranda Street
Portland, Maine 04103
T: [illegible]
F: [illegible]
Web: [illegible]

Allied Project No: 07010
Cad File: A3.06.dwg

STATE OF MAINE
DEPARTMENT OF TRANSPORTATION

| DATE | |
|---|---|
| FED PIN NO: | |
| PIN NO: 16123.50 | |

LICENSED ARCHITECT TERRY P. ROOKARD No. 3360 STATE OF MAINE

| | |
|---|---|
| SIGNATURE | |
| TERRY P. ROOKARD | |
| ARCH. LIN. NUMBER | 3360 |
| DATE | MAY 1, 2009 |

| PROJECT INFORMATION | |
|---|---|
| PROGRAM | - |
| PROJECT MANAGER | WPP |
| DESIGNER | TV |
| CONSULTANT | ALLIED ENGINEERING |
| PROJECT RESIDENT | - |
| CONTRACTOR | - |
| PROJECT COMPLETION DATE | - |

MAINE DEPARTMENT OF TRANSPORTATION
ACADIA GATEWAY FACILITY
BUS MAINTENANCE FACILITY

BUILDING SECTIONS IV

© COPYRIGHT 2007 ALLIED ENGINEERING, INC.

SHEET NUMBER
A3.06
OF

Filename: - Date: - Division: - Username: -

A:\PROJECTS\3700-Trenton\CAD\A\Sheet\A3.06.dwg Aug 04, 2009 - 12:37pm

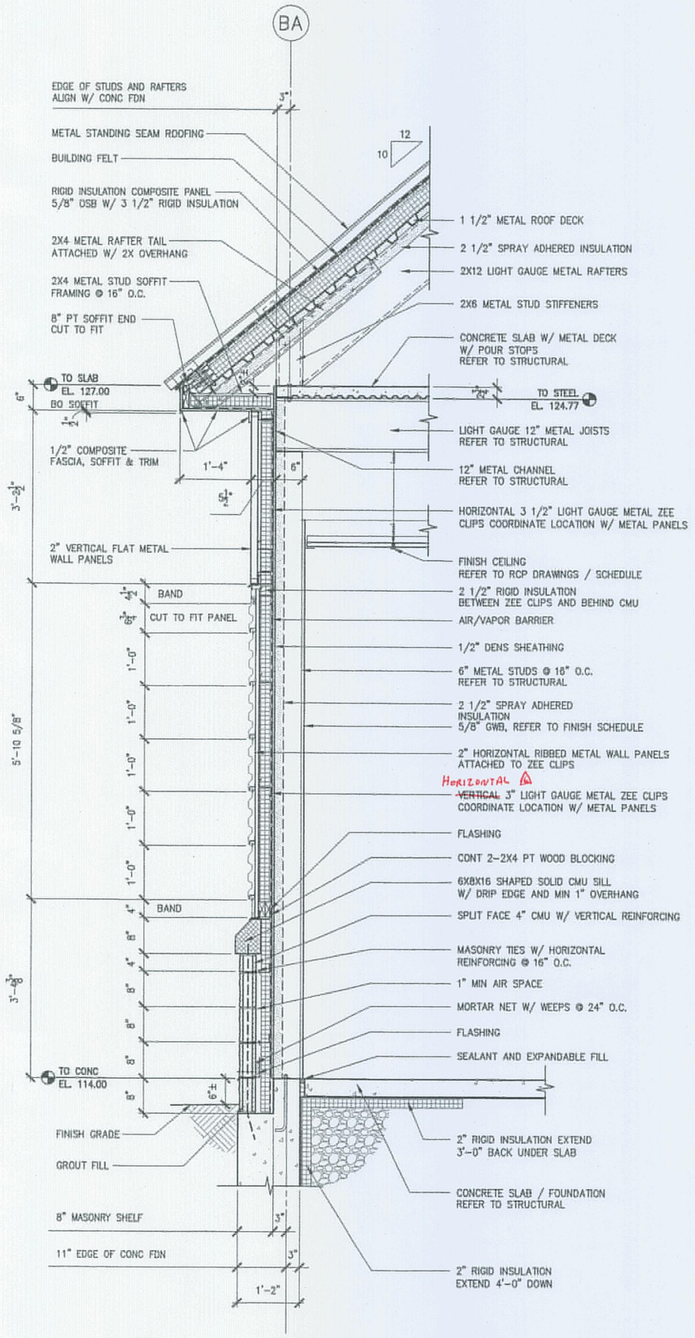


1 TYPICAL WALL SECTION AT ADMINISTRATION BUILDING
3/4"=1'-0"

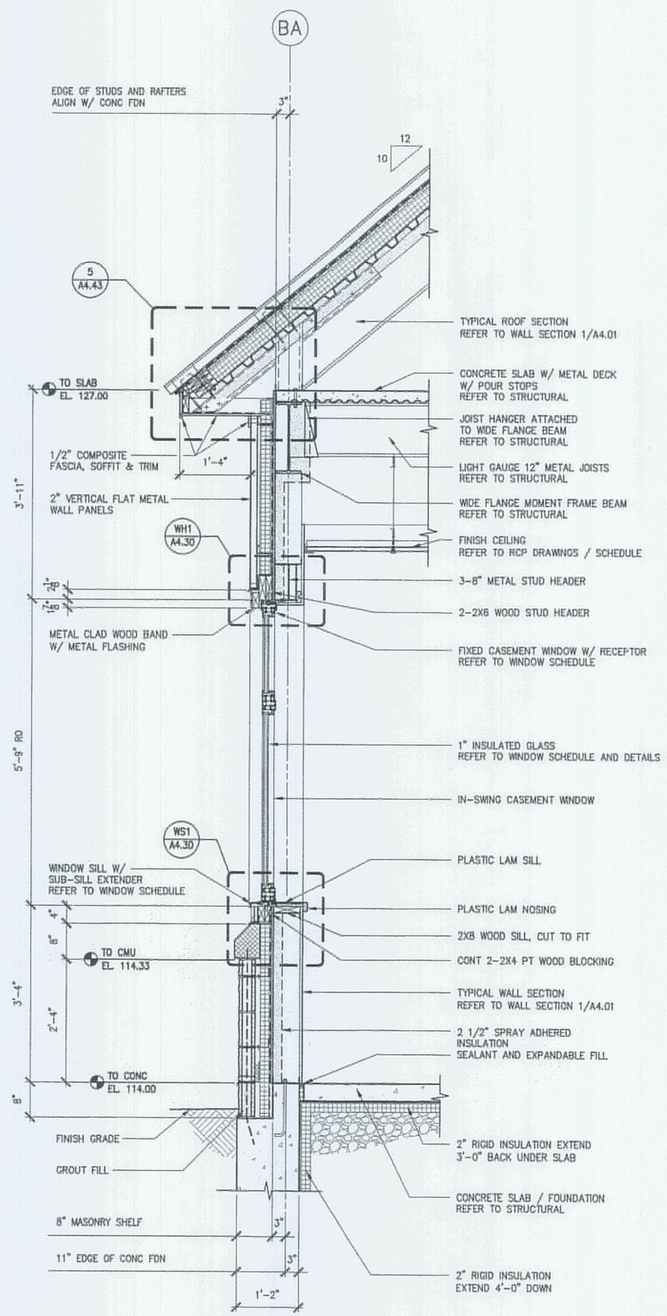


2 WALL SECTION AT WINDOW AT ADMINISTRATION BUILDING
3/4"=1'-0"

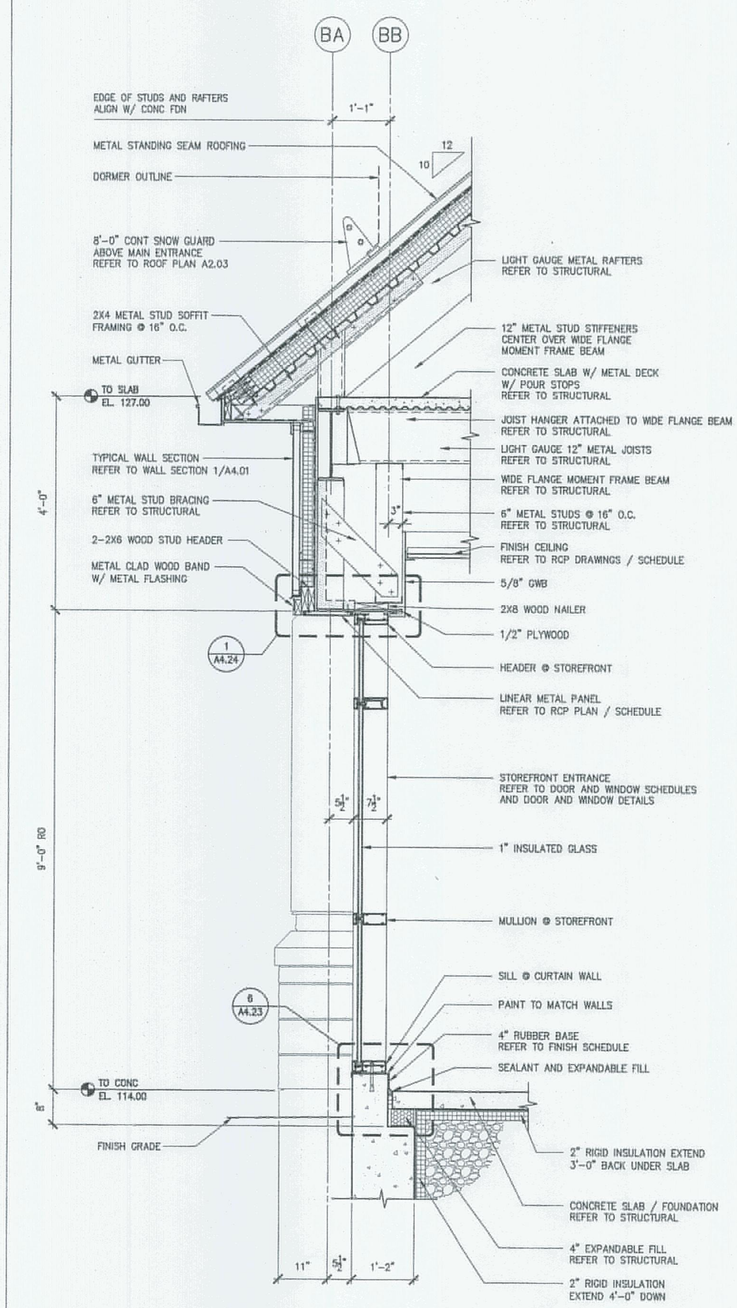


3 WALL SECTION AT ENTRANCE AT ADMINISTRATION BUILDING
3/4"=1'-0"

STATE OF MAINE
DEPARTMENT OF TRANSPORTATION

| | DATE |
|---|---|
| FED PIN NO: | |
| PIN NO: 16123.50 | |

LICENSED ARCHITECT TERRY P. ROOKARD No. 3360 STATE OF MAINE

| PROJECT INFORMATION | |
|---|---|
| PROGRAM | - |
| PROJECT MANAGER | WFP |
| DESIGNER | TV |
| CONSULTANT | ALLIED ENGINEERING |
| PROJECT RESIDENT | - |
| CONTRACTOR | - |
| PROJECT COMPLETION DATE | - |

SIGNATURE
TERRY P. ROOKARD
ARCH. LIN. NUMBER
3360
DATE MAY 1, 2009

MAINE DEPARTMENT OF TRANSPORTATION
ACADIA GATEWAY FACILITY
BUS MAINTENANCE FACILITY

WALL SECTIONS I

© COPYRIGHT 2007 ALLIED ENGINEERING, INC.

SHEET NUMBER
A4.01
OF

TRANSPORTATION
AECOM USA, Inc.
66 Long Wharf
Boston, MA
T 617.723.1700 F 617.723.6856
AECOM
www.aecom.com

Allied Engineering
Structural Mechanical Electrical Civil Engineering
160 Veranda Street
Portland, Maine 04103
T: 207.231.0888
F: 207.231.0366
Web: www.allied-eng.com

Allied Project No: 07010
Cad File: A4.01dwg

Filename: - Division: - Date: - Username: -
Z:\PROJECTS\3700-Trenton\CAD\A\Sheet\A4.01.dwg Aug 04, 2009 - 12:27pm

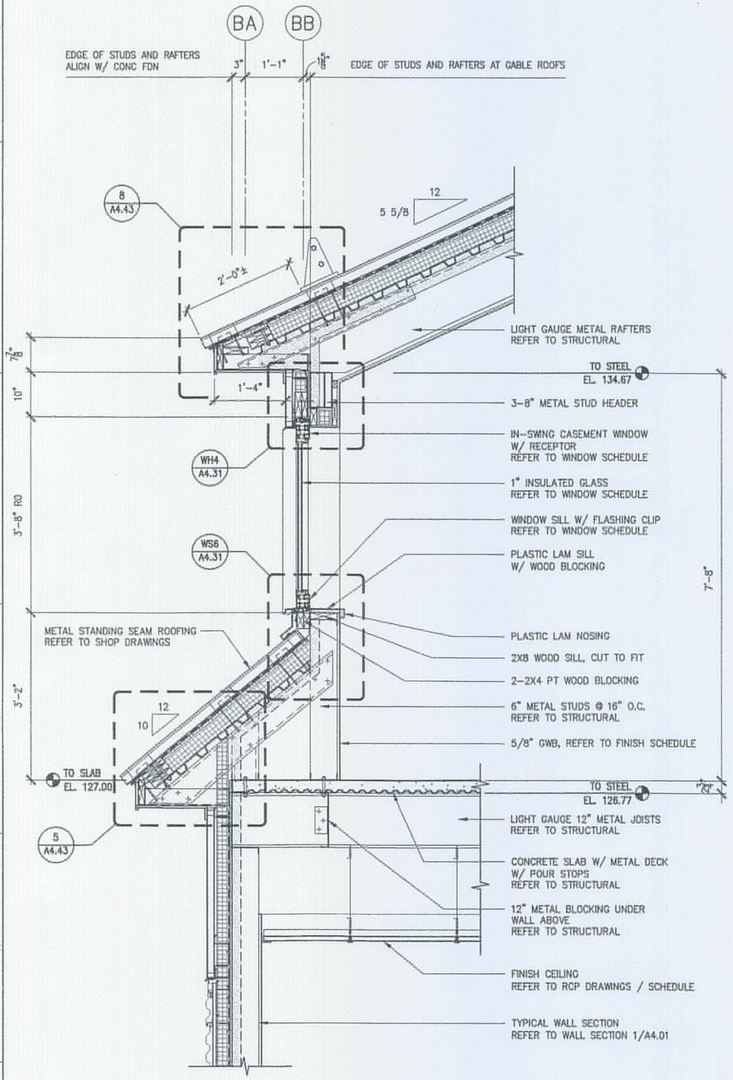


4 WALL SECTION AT ROOF GABLE
3/4"=1'-0"

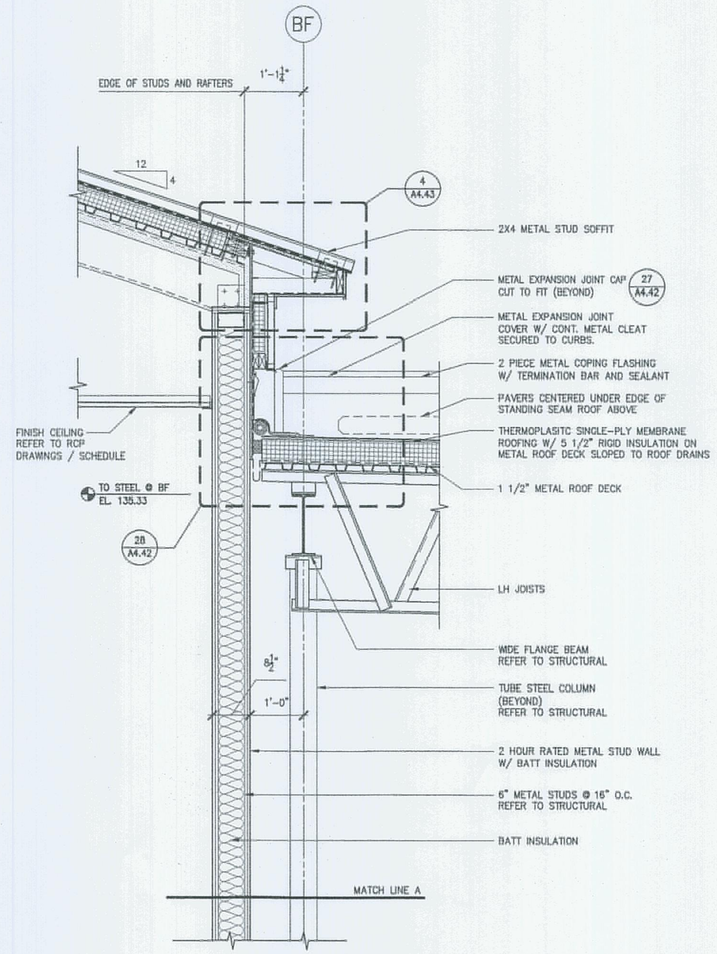


5 WALL SECTION AT COLUMN LINE BF
3/4"=1'-0"

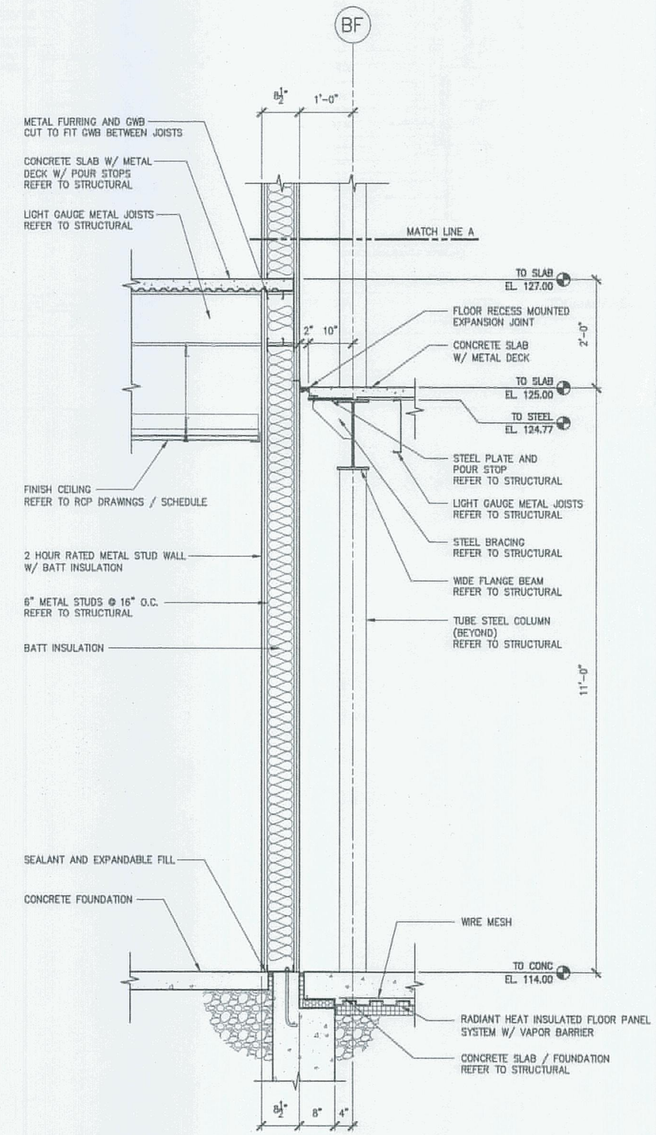


6 WALL SECTION AT COLUMN LINE BF
3/4"=1'-0"

STATE OF MAINE
DEPARTMENT OF TRANSPORTATION

DATE

FED PIN NO:

PIN NO: 16123.50

LICENSED ARCHITECT TERRY P. ROOKARD No. 3360 STATE OF MAINE

| PROJECT INFORMATION | |
|---|---|
| PROGRAM | - |
| PROJECT MANAGER | WPP |
| DESIGNER | TV |
| CONSULTANT | ALLIED ENGINEERING |
| PROJECT RESIDENT | - |
| CONTRACTOR | - |
| PROJECT COMPLETION DATE | - |

SIGNATURE: TERRY P. ROOKARD
ARCH. LIN. NUMBER 3360
DATE MAY 1, 2009

MAINE DEPARTMENT OF TRANSPORTATION
ACADIA GATEWAY FACILITY
BUS MAINTENANCE FACILITY

WALL SECTIONS II

© COPYRIGHT 2007 ALLIED ENGINEERING, INC.

SHEET NUMBER
A4.02
OF

AECOM USA, Inc.
66 Long Wharf
Boston, MA
T 617.723.1700 F 617.723.6856

AECOM
www.aecom.com

Allied Engineering
160 Veranda Street
Portland, Maine 04103
T: 207.221.0860
F: 207.221.1266
Web: www.allied-eng.com

Allied Project No: 07010
Cad File: A4.02.dwg

Filename:- Division:- Date:- Username:-
J:\PROJECTS\3700-Trenton\240\A\Sheet\A4.02.dwg Aug 04, 2009 - 12:37pm

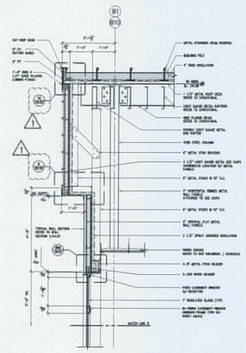

8 WALL SECTION @ COLUMN LINES B1 & B10
SCALE: 3/8" = 1'-0"

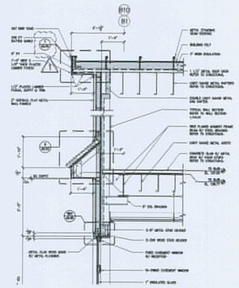

9 WALL SECTION @ COLUMN LINES B1 & B10
SCALE: 3/8" = 1'-0"

MaineDOT
Maine Department of Transportation
TRENTON, MAINE

AECOM
A E C O M USA - OF MASSACHUSETTS, INC.
44 LINE WHARF BOSTON, MASSACHUSETTS 02110
T: (617) 723-1700 F: (617) 742-0347

WALL SECTIONS

Allied Engineering
105 Veranda Street
Portland, Maine 04103
P: (207) 772-2010
F: (207) 772-2011
Web: www.alliedengineering.com

SCALE: 3/8" = 1'-0"
DATE: 12/23/10
DRAWN: PR
DWG. NO.: SKA-04D
SHEET NUMBER: A4.03
SCHEDULE/DESCRIPTION: MAINE DEPARTMENT OF TRANSPORTATION
ALLIED PROJECT NO. 09020

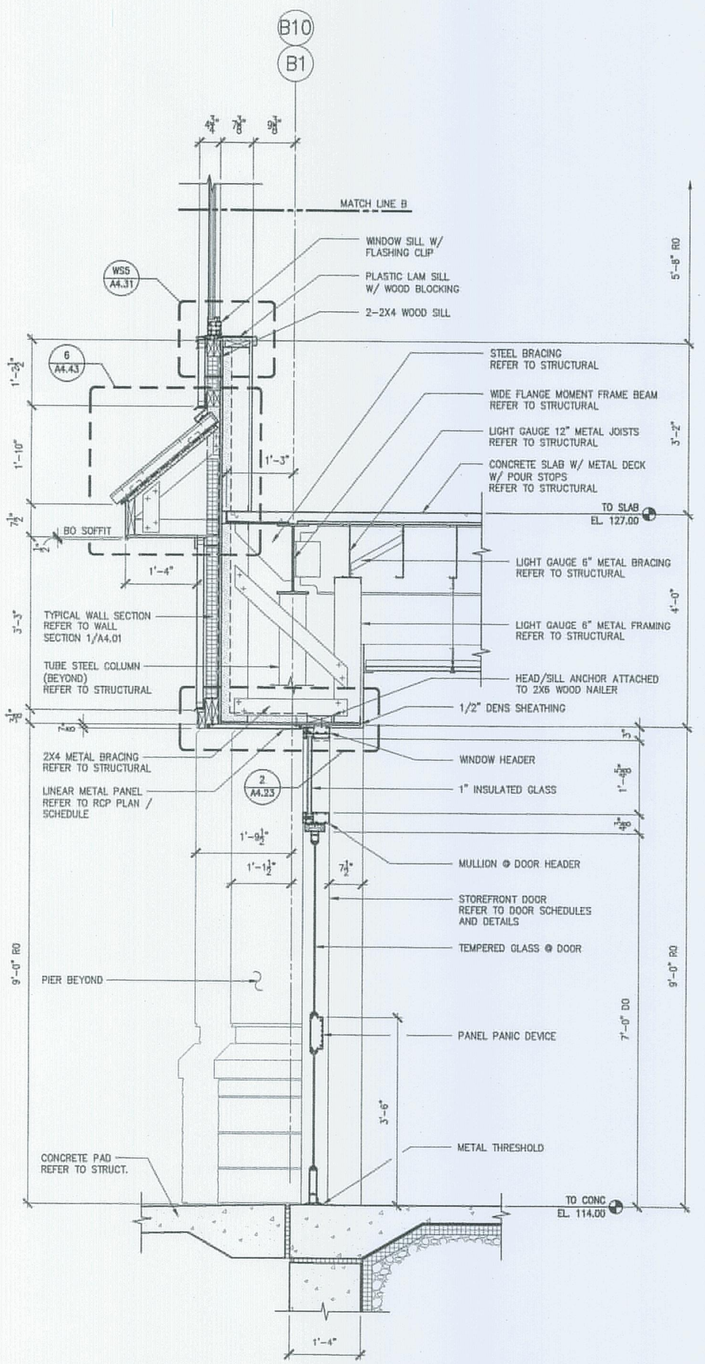


7 WALL SECTION @ COLUMN LINES B1 & B10
3/4"=1'-0"

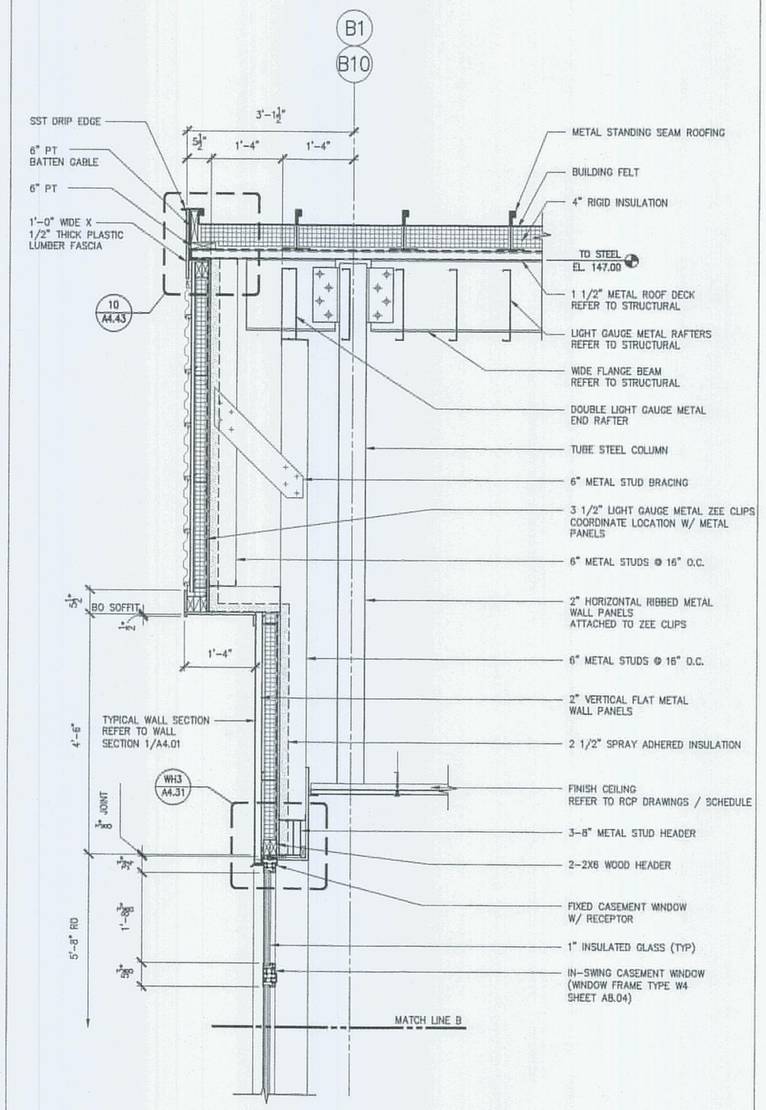


SEE SKA-04D

8 WALL SECTION @ COLUMN LINES B1 & B10
3/4"=1'-0"

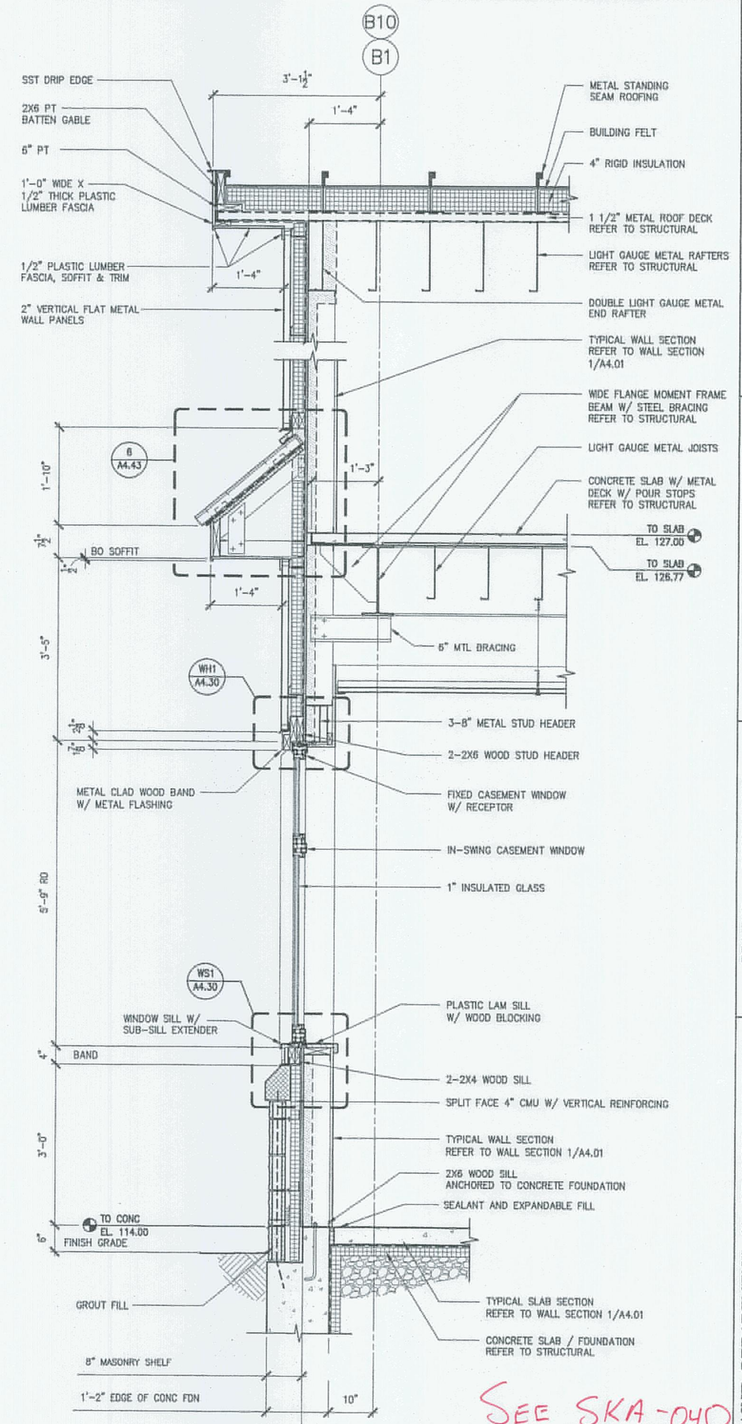


SEE SKA-04D

9 WALL SECTION @ COLUMN LINES B1 & B10
3/4"=1'-0"

STATE OF MAINE
DEPARTMENT OF TRANSPORTATION

| | DATE |
|---|---|
| FED PIN NO: | |
| PIN NO: 16123.50 | |

LICENSED ARCHITECT TERRY P. ROOKARD No. 3360 STATE OF MAINE

| INFORMATION | |
|---|---|
| SIGNATURE | |
| TERRY P. ROOKARD | |
| ARCH. LIN. NUMBER | |
| 3360 | |
| DATE | |
| MAY 1, 2009 | |

| PROJECT | | INFO | DATE |
|---|---|---|---|
| PROGRAM | - | - | - |
| PROJECT MANAGER | WPF | - | - |
| DESIGNER | TV | - | - |
| CONSULTANT | ALLIED ENGINEERING | - | - |
| PROJECT RESIDENT | - | - | - |
| CONTRACTOR | - | - | - |
| PROJECT COMPLETION DATE | - | - | - |

MAINE DEPARTMENT OF TRANSPORTATION
ACADIA GATEWAY FACILITY
BUS MAINTENANCE FACILITY

WALL SECTIONS III

© COPYRIGHT 2007 ALLIED ENGINEERING, INC.

SHEET NUMBER
A4.03
OF

TRANSPORTATION
AECOM USA, Inc.
66 Long Wharf
Boston, MA
T 617.723.1700 F 617.723.6856
AECOM
www.aecom.com
Allied Engineering
160 Veranda Street
Portland, Maine 04103
T: 207.221.2268
F: 207.221.2266
Web: www.allied-eng.com

Allied Project No: 07010 | Cad File: A4.03.dwg

Filename:- Division:- Date:- Username:-
J:\PROJECTS\3700-Trenton\CADD\A\Sheet\A4.03.dwg Aug 04, 2009 - 12:37pm

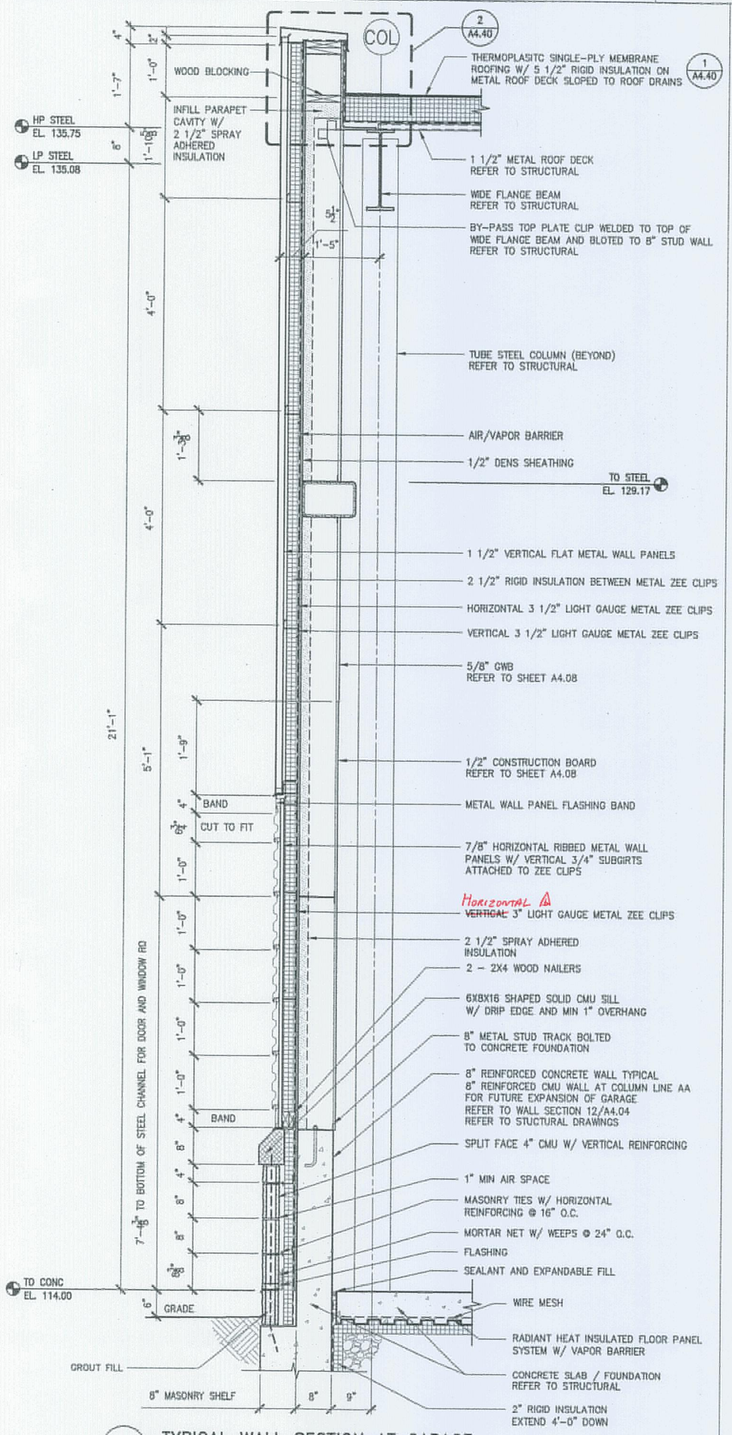


10 TYPICAL WALL SECTION AT GARAGE
3/4"=1'-0"

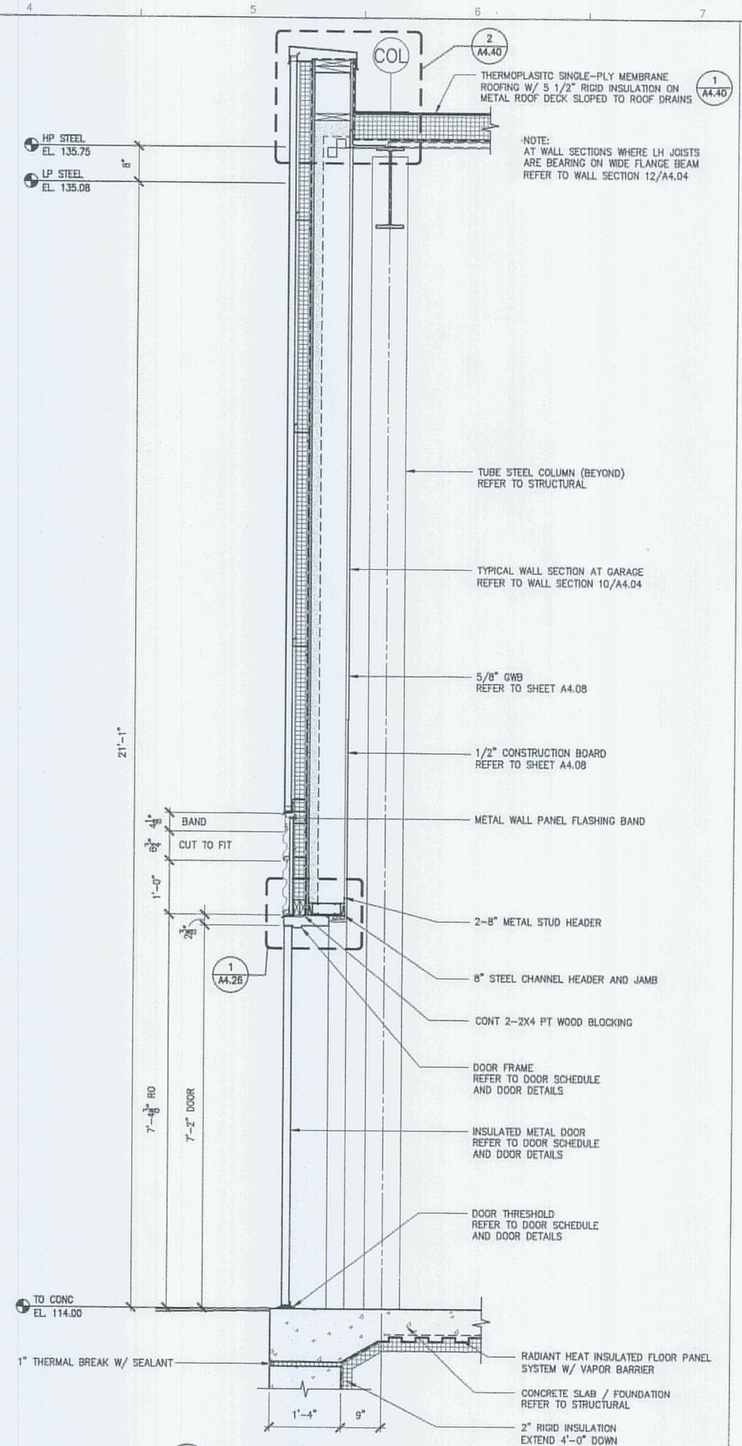


11 WALL SECTION @ DOOR
3/4"=1'-0"

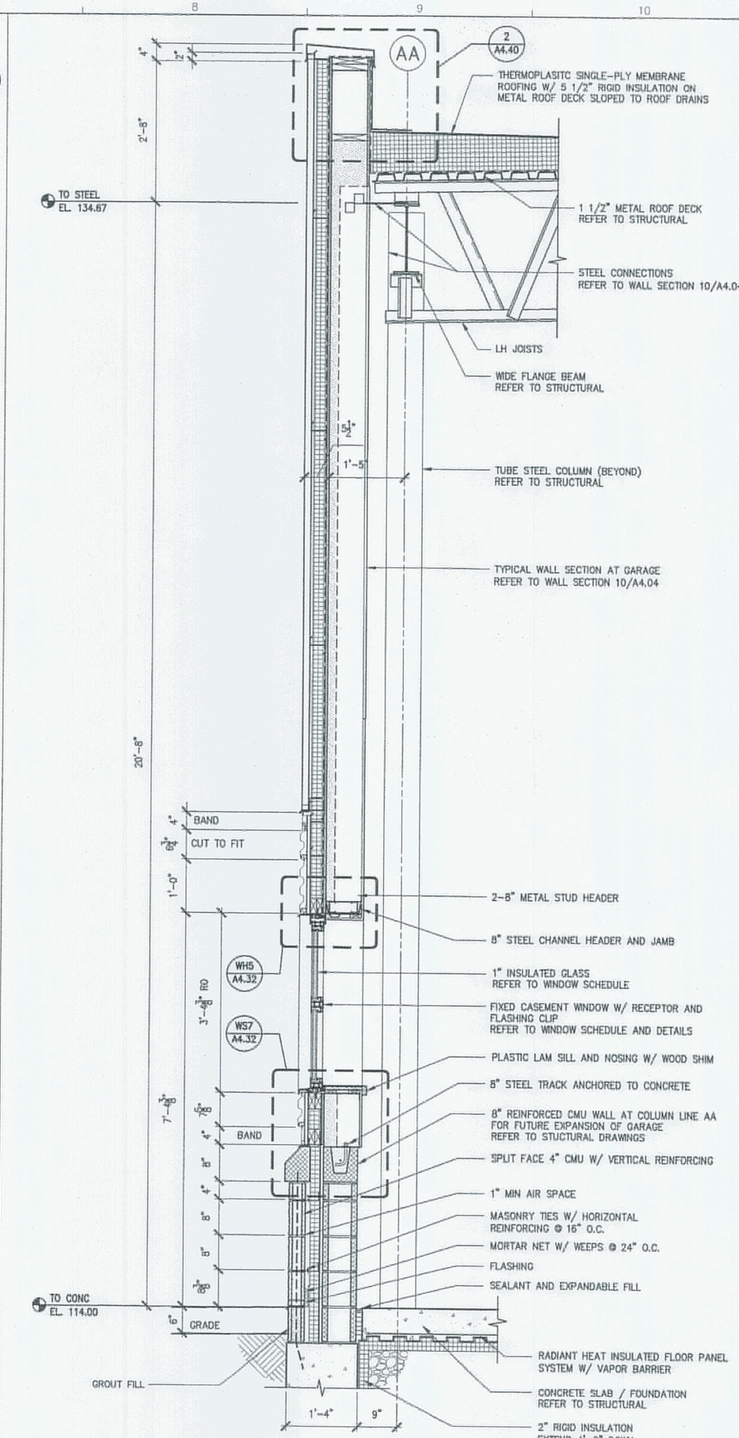


12 WALL SECTION @ WINDOW
3/4"=1'-0"


AECOM USA, Inc.
66 Long Wharf
Boston, MA
T 617.723.1700 F 617.723.6856

AECOM
www.aecom.com

Allied Engineering
Plumbing Mechanical Service Consultants
160 Veranda Street
Portland, Maine 04103
T: 207.231.3268
F: 207.231.3264
Web: www.allied-eng.com


Allied Project No: 07010
Cad File: A4.04.dwg

STATE OF MAINE
DEPARTMENT OF TRANSPORTATION

| | DATE |
|---|---|
| | |
| | |
| | |
| | |

FED PIN NO:
PIN NO: 16123.50

LICENSED ARCHITECT TERRY P. ROOKARD No. 3360 STATE OF MAINE

| PROJECT INFORMATION | |
|---|---|
| PROGRAM | - |
| PROJECT MANAGER | WPP |
| DESIGNER | TV |
| CONSULTANT | ALLIED ENGINEERING |
| PROJECT RESIDENT | - |
| CONTRACTOR | - |
| PROJECT COMPLETION DATE | - |

SIGNATURE
TERRY P. ROOKARD
ARCH. LIN. NUMBER
3360
DATE MAY 1, 2009

MAINE DEPARTMENT OF TRANSPORTATION
ACADIA GATEWAY FACILITY
BUS MAINTENANCE FACILITY

WALL SECTIONS IV

© COPYRIGHT 2007 ALLIED ENGINEERING, INC.

SHEET NUMBER
A4.04
OF

Filename: - Division: - Date: - Username: -
J:\PROJECTS\3700-Trenton\CAD\A\Sheet\A4.04.dwg Aug 04, 2009 - 12:37pm

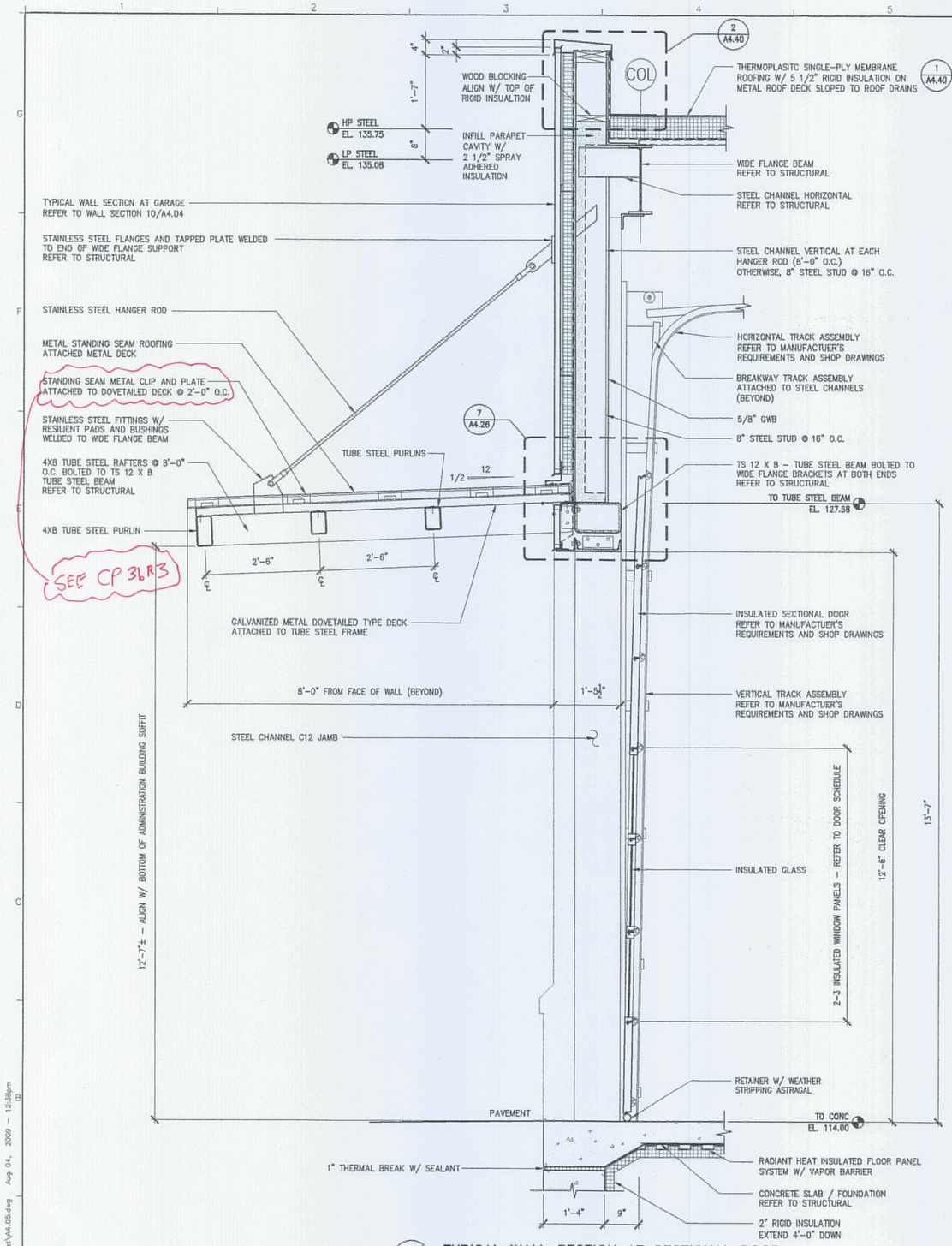


13 TYPICAL WALL SECTION AT SECTIONAL DOOR
3/4"=1'-0"

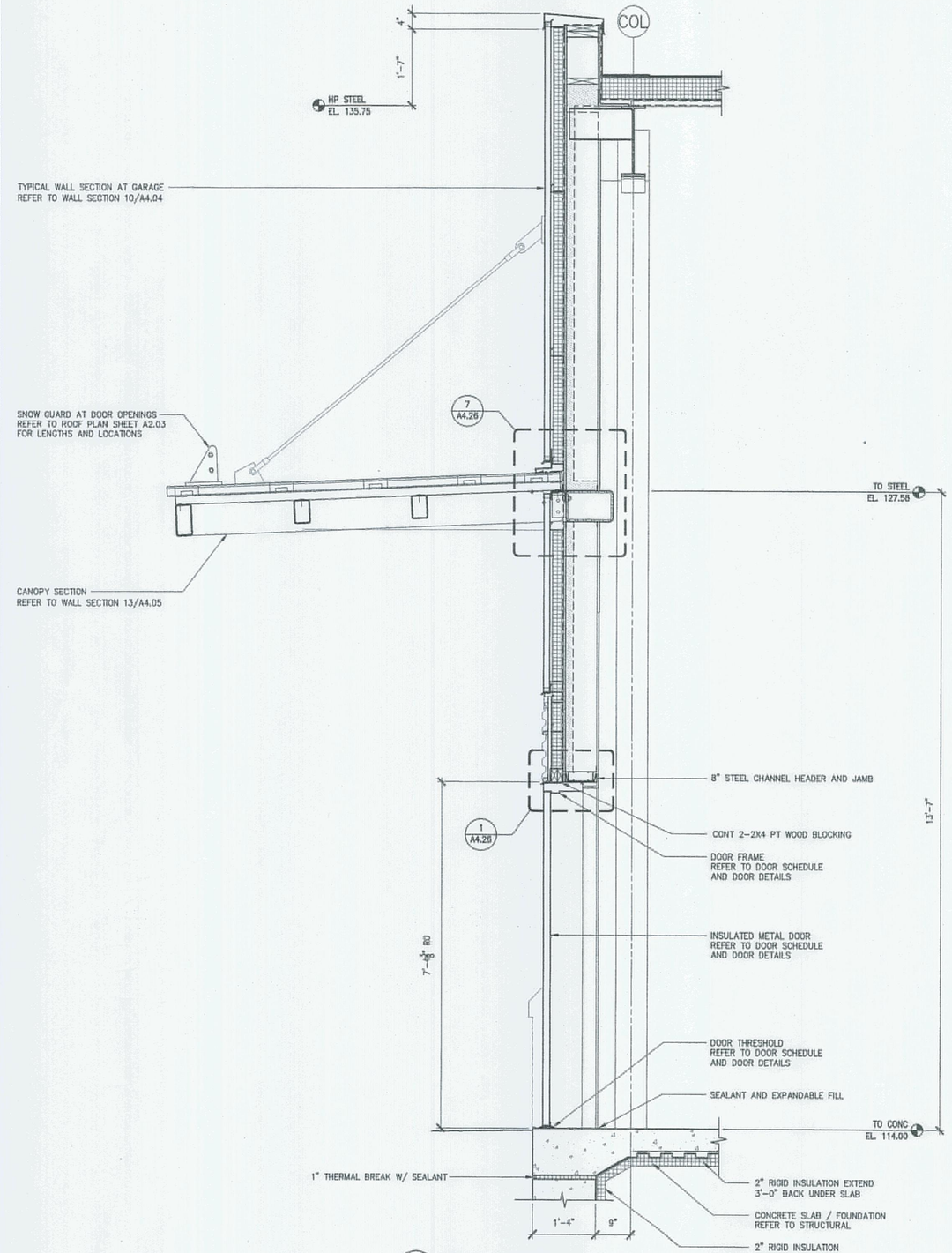


14 WALL SECTION @ DOOR AND CANOPY
3/4"=1'-0"

STATE OF MAINE
DEPARTMENT OF TRANSPORTATION

| | DATE |
|---|---|
| | |
| | |
| | |

FED PIN NO:
PIN NO: 16123.50

LICENSED ARCHITECT TERRY P. ROOKARD No. 3360 STATE OF MAINE

SIGNATURE
TERRY P. ROOKARD
ARCH. LIN. NUMBER
3360
DATE MAY 1, 2009

PROJECT INFORMATION

| | |
|---|---|
| PROGRAM | - |
| PROJECT MANAGER | WFP |
| DESIGNER | TV |
| CONSULTANT | ALLIED ENGINEERING |
| PROJECT RESIDENT | - |
| CONTRACTOR | - |
| PROJECT COMPLETION DATE | - |

MAINE DEPARTMENT OF TRANSPORTATION
ACADIA GATEWAY FACILITY
BUS MAINTENANCE FACILITY

WALL SECTIONS V

© COPYRIGHT 2007 ALLIED ENGINEERING, INC.

SHEET NUMBER
A4.05
OF

TRANSPORTATION

AECOM USA, Inc.
66 Long Wharf
Boston, MA
T 617.723.1700 F 617.723.6856

AECOM
www.aecom.com

Allied Engineering
Structural Mechanical Electrical Civil Engineering

160 Veranda Street
Portland, Maine 04103
T: 207.221.3368
F: 207.221.2366
Web: www.alliedeng.com

Allied Project No: 07010
Cad File: A4.05.dwg

Filename: - Date: - Division: - Username: -
J:\PROJECTS\3700-Trenton\CAD\A\Sheet\A4.05.dwg Aug 04, 2009 - 12:36pm

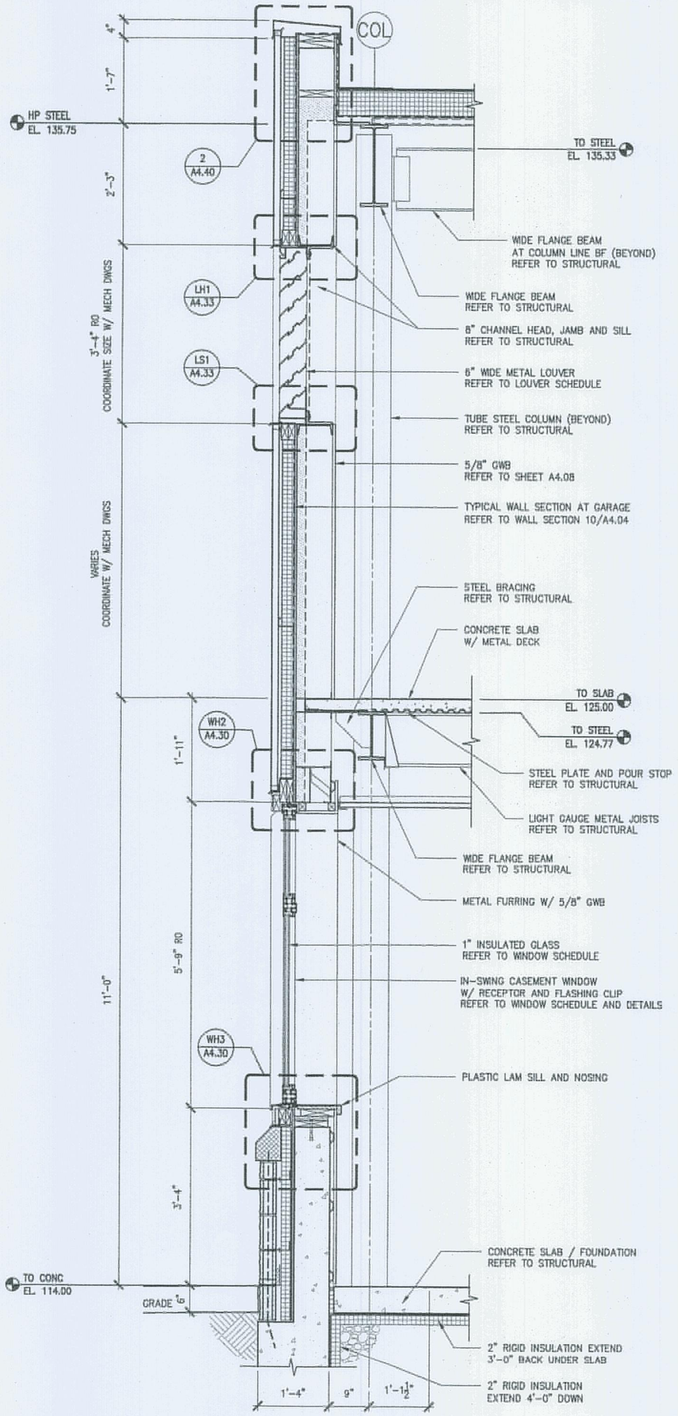


15 WALL SECTION @ WINDOW
3/4"=1'-0"

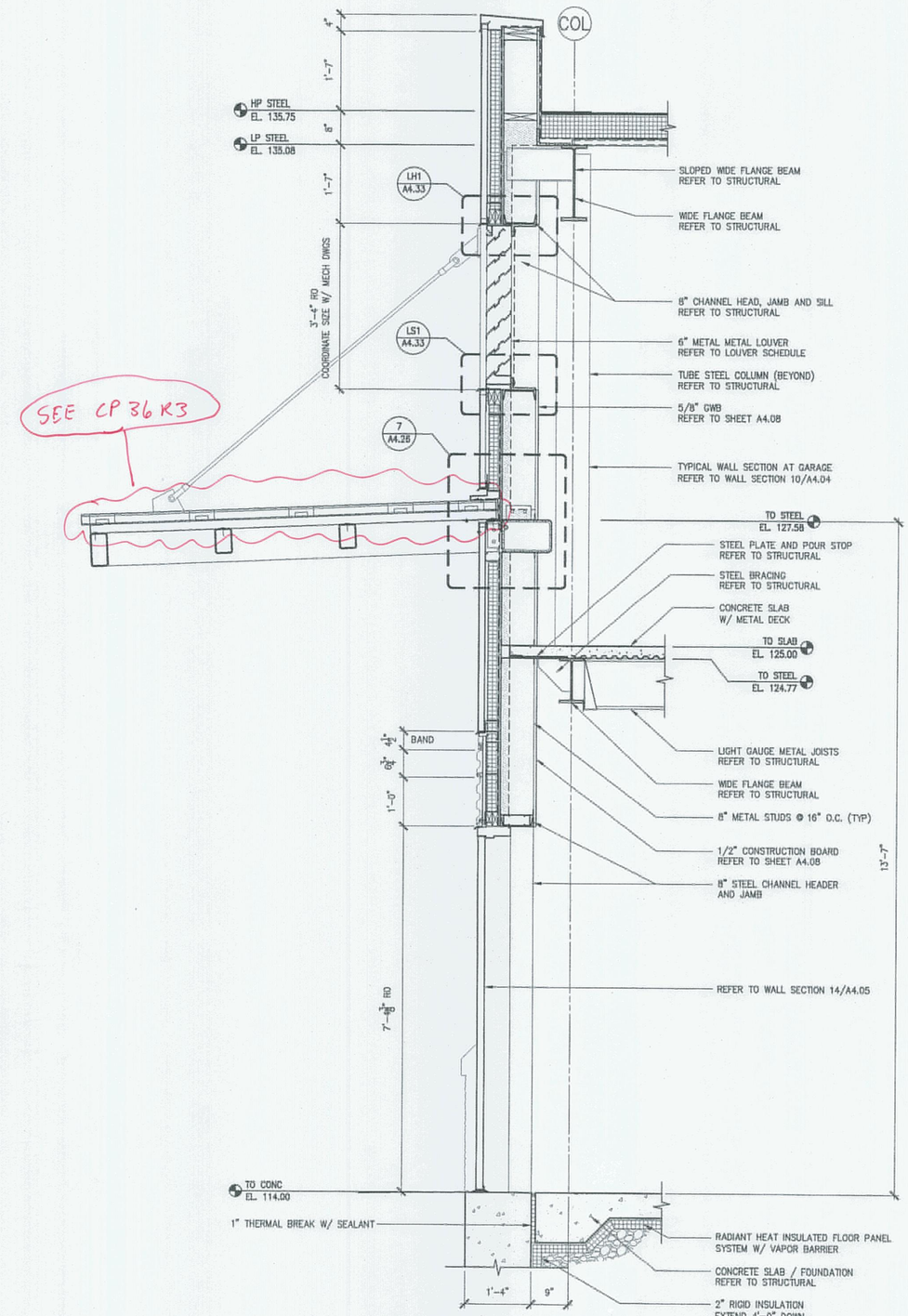


16 WALL SECTION @ DOOR
3/4"=1'-0"

STATE OF MAINE
DEPARTMENT OF TRANSPORTATION

DATE

FED PIN NO:

PIN NO: 16123.50

LICENSED ARCHITECT TERRY P. ROOKARD No. 3360 STATE OF MAINE

SIGNATURE
TERRY P. ROOKARD
ARCH. LIN. NUMBER
3360
DATE MAY 1, 2009

| PROJECT INFORMATION | |
|---|---|
| PROGRAM | – |
| PROJECT MANAGER | WPF |
| DESIGNER | TV |
| CONSULTANT | ALLIED ENGINEERING |
| PROJECT RESIDENT | – |
| CONTRACTOR | – |
| PROJECT COMPLETION DATE | – |

MAINE DEPARTMENT OF TRANSPORTATION
ACADIA GATEWAY FACILITY
BUS MAINTENANCE FACILITY

WALL SECTIONS VI

© COPYRIGHT 2007 ALLIED ENGINEERING, INC.

SHEET NUMBER
A4.06
OF

TRANSPORTATION
AECOM USA, Inc.
66 Long Wharf
Boston, MA
T 617.723.1700 F 617.723.6856

AECOM
www.aecom.com

Allied Engineering
Architect Structural Civil Consulting
160 Veranda Street
Portland, Maine 04103
T: 207.221.2260
F: 207.221.2266
Web: www.allied-eng.com

Allied Project No: 07010
Cad File: A4.06.dwg

Filename: – Division: – Date: – Username: –
J:\PROJECTS\3700-Trenton\CAD\A\Sheet\A4.06.dwg Aug 04, 2009 - 12:38pm

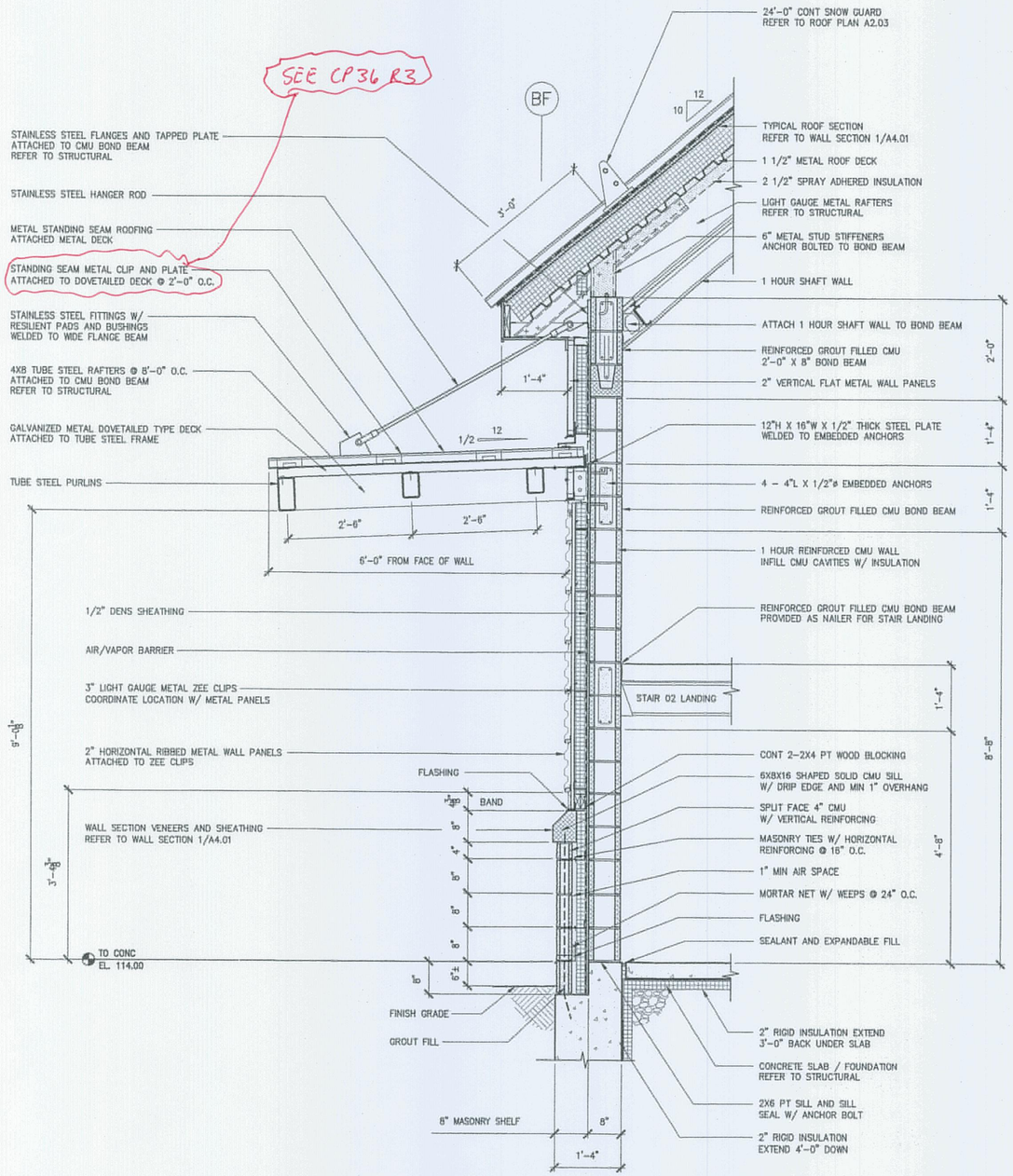


17 WALL SECTION AT STAIR 02
3/4"=1'-0"

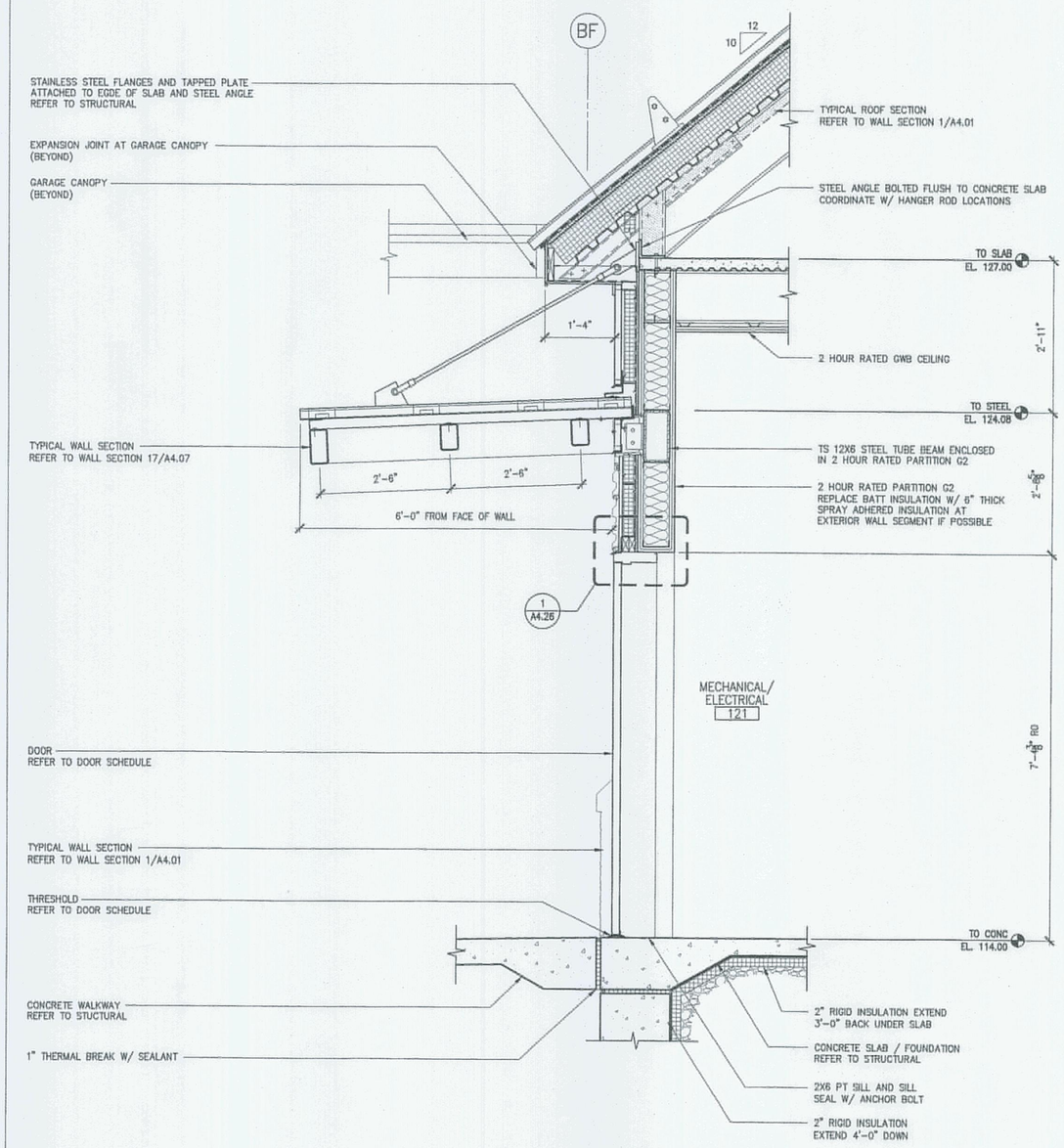


18 WALL SECTION AT ROOM 121
3/4"=1'-0"

STATE OF MAINE
DEPARTMENT OF TRANSPORTATION

| | DATE |
|---|---|
| | |
| FED PIN NO: | |
| PIN NO: 16123.50 | |

LICENSED ARCHITECT TERRY P. ROOKARD No. 3360 STATE OF MAINE

| PROJECT INFORMATION | |
|---|---|
| PROGRAM | - |
| PROJECT MANAGER | WFF |
| DESIGNER | TV |
| CONSULTANT | ALLIED ENGINEERING |
| PROJECT RESIDENT | - |
| CONTRACTOR | - |
| PROJECT COMPLETION DATE | - |

SIGNATURE
TERRY P. ROOKARD
ARCH. LIN. NUMBER
3360
DATE
MAY 1, 2009

MAINE DEPARTMENT OF TRANSPORTATION
ACADIA GATEWAY FACILITY
BUS MAINTENANCE FACILITY

WALL SECTIONS VII

© COPYRIGHT 2007 ALLIED ENGINEERING, INC.

SHEET NUMBER
A4.07
OF

TRANSMITTAL FOR

AECOM USA, Inc.
66 Long Wharf
Boston, MA
T 617.723.1700 F 617.723.6856

AECOM
www.aecom.com

Allied Engineering
Structural Mechanical Electrical Civil Engineering
160 Veranda Street
Portland, Maine 04103
T: 207.231.2268
F: 207.231.2266
Web: www.allied-eng.com

Allied Project No: 07010
Cad File: A4.07.dwg

Filename: - Date: - Division: - Username: -
J:\PROJECTS\3700-Trenton\CAD\A\Sheet\A4.07.dwg Aug 04, 2009 - 12:38pm

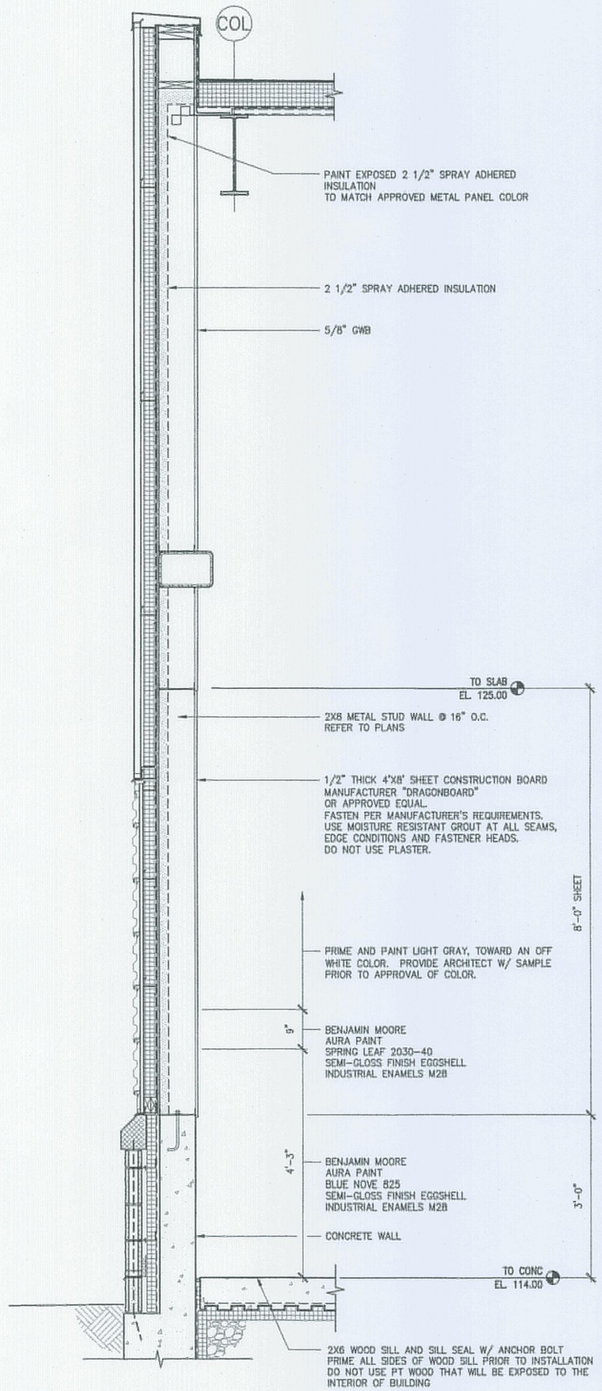


19 TYPICAL INTERIOR FINISH ON EXTERIOR WALLS
3/4"=1'-0"

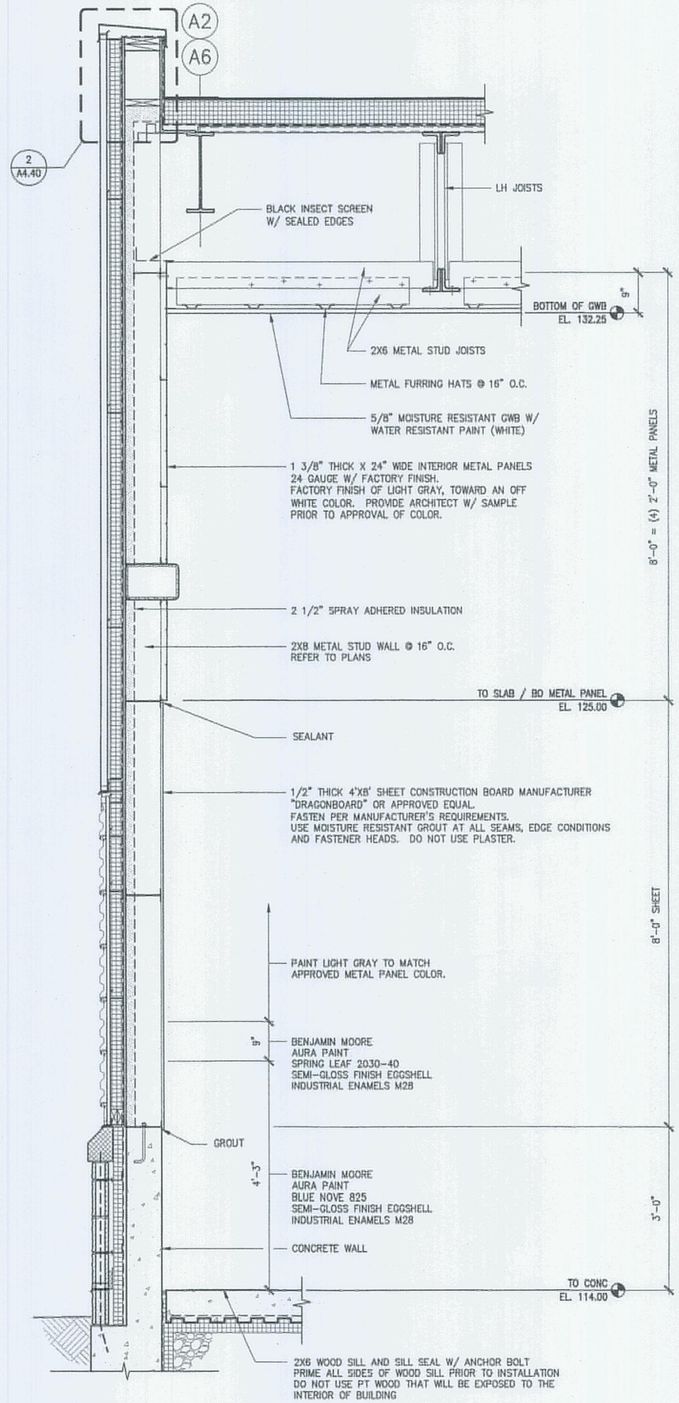


20 INTERIOR FINISH @ BUS WASH EXTERIOR WALLS
3/4"=1'-0"

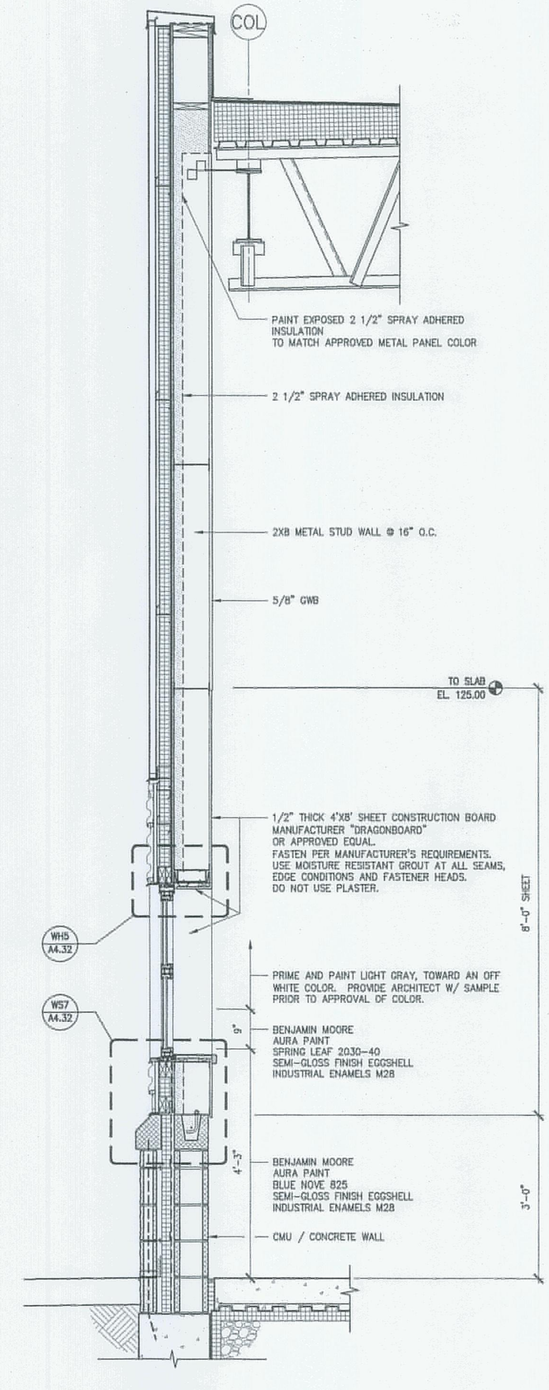


21 INTERIOR FINISH ON EXTERIOR WALL COLUMN LINE AA
3/4"=1'-0"

STATE OF MAINE
DEPARTMENT OF TRANSPORTATION

| | DATE |
|---|---|
| FED PIN NO: | |
| PIN NO: 16123.50 | |

LICENSED ARCHITECT TERRY P. ROOKARD No. 3360 STATE OF MAINE

SIGNATURE
TERRY P. ROOKARD
ARCH. LIN. NUMBER
3360
DATE
MAY 1, 2009

PROJECT INFORMATION

| | |
|---|---|
| PROGRAM | – |
| PROJECT MANAGER | WPP |
| DESIGNER | TV |
| CONSULTANT | ALLIED ENGINEERING |
| PROJECT RESIDENT | – |
| CONTRACTOR | – |
| PROJECT COMPLETION DATE | – |

MAINE DEPARTMENT OF TRANSPORTATION
ACADIA GATEWAY FACILITY
BUS MAINTENANCE FACILITY

WALL SECTIONS VIII

© COPYRIGHT 2007 ALLIED ENGINEERING, INC.

SHEET NUMBER
A4.08
OF

TRANSPORTATION
AECOM USA, Inc.
66 Long Wharf
Boston, MA
T 617.723.1700 F 617.723.6858
AECOM
www.aecom.com

Allied Engineering
Corporate Mechanical Electrical Consultants
160 Veranda Street
Portland, Maine 04103
T: 207.223.3268
F: 207.223.3266
Web: www.allied-eng.com

Allied Project No: 07010
Cad File: A4.08.dwg

Filename: – Username: – Date: – Division: – J:\PROJECTS\3700-Trenton\CADD\A\Sheet\A4.08.dwg Aug 04, 2009 - 12:38pm

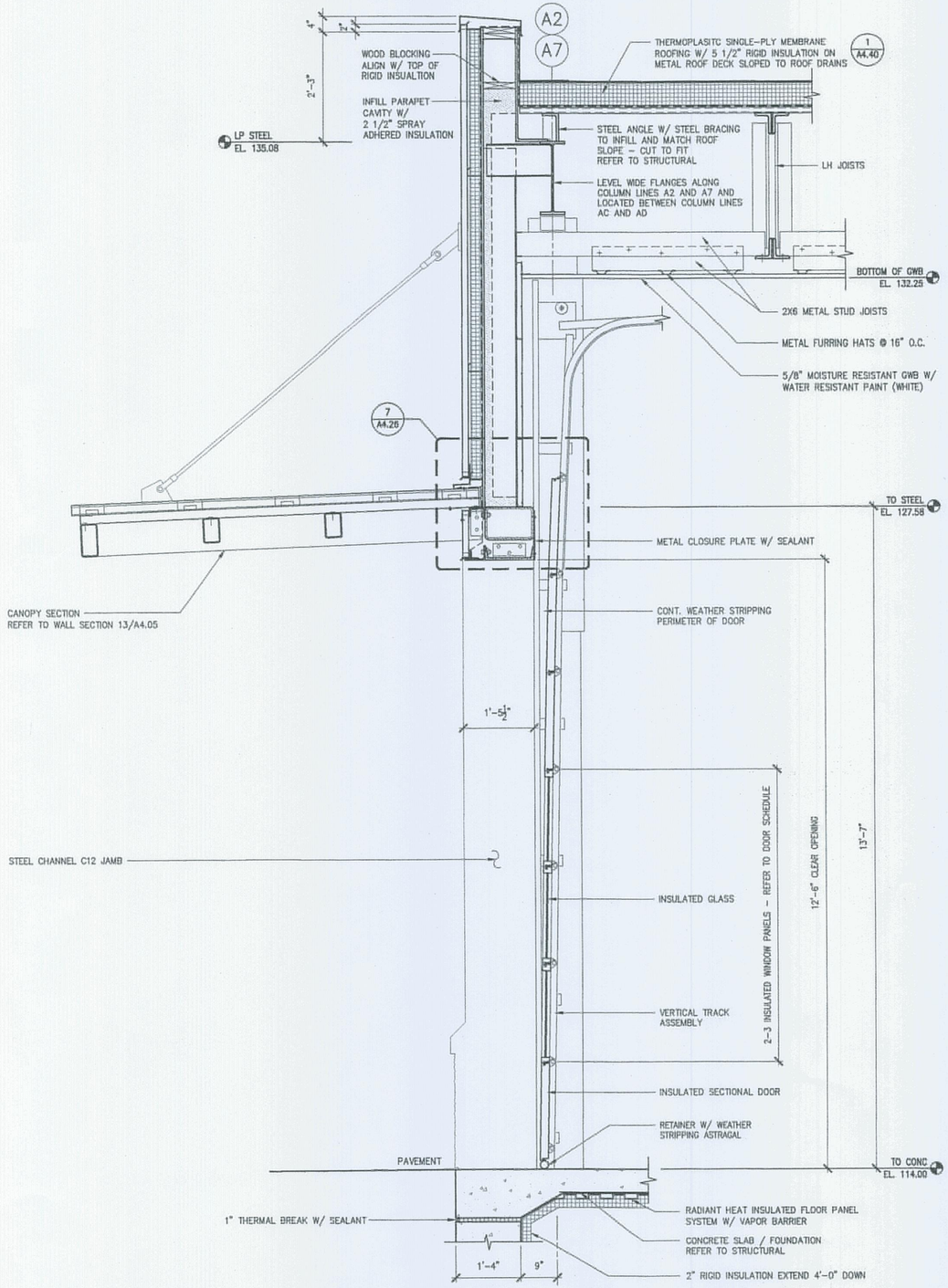


22 WALL SECTION @ BUS WASH SECTIONAL DOOR
3/4"=1'-0"

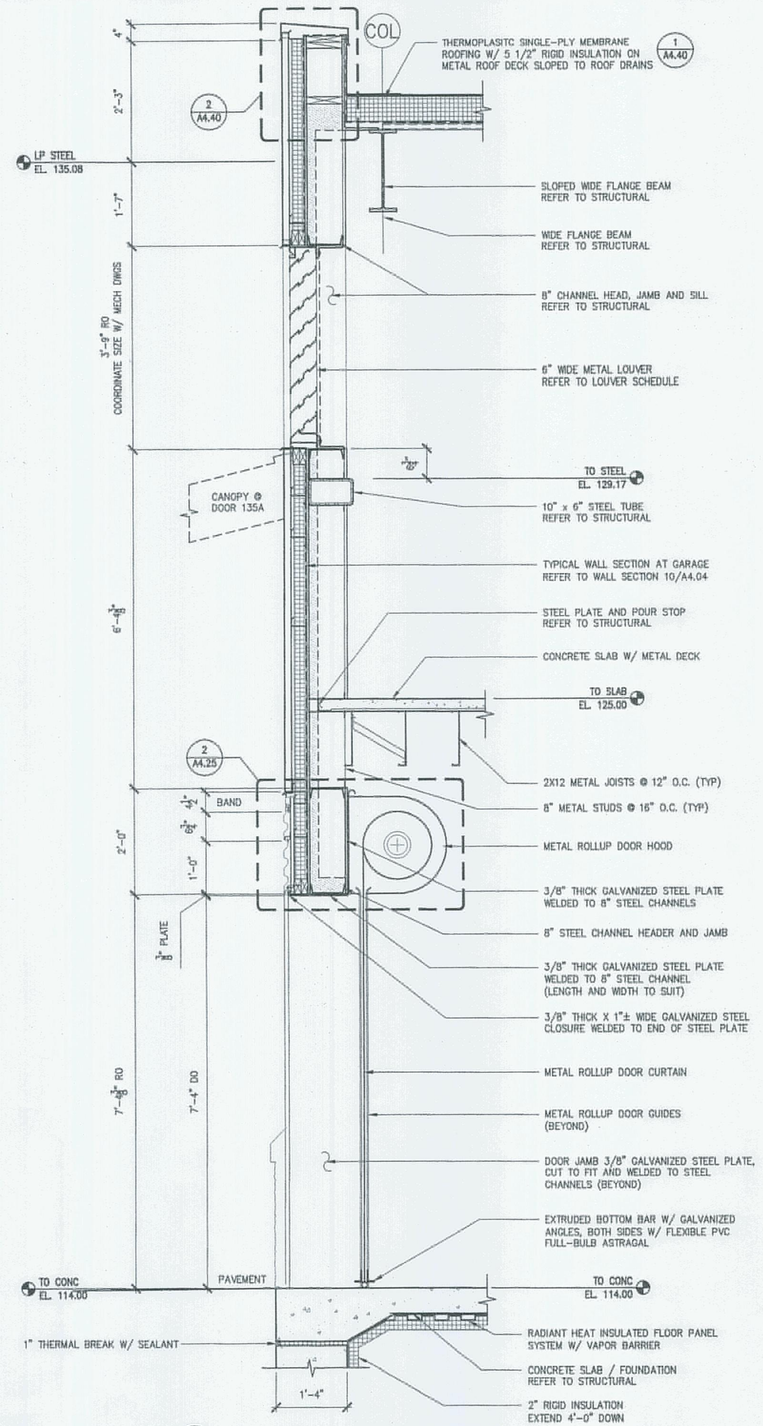


23 WALL SECTION @ ROLLUP DOORS 138A & 135A
3/4"=1'-0"

STATE OF MAINE
DEPARTMENT OF TRANSPORTATION

| DATE | |
|---|---|
| | |

FED PIN NO:
PIN NO: 16123.50

LICENSED ARCHITECT TERRY P. ROOKARD NO. 3360 STATE OF MAINE

SIGNATURE
TERRY P. ROOKARD
ARCH. LIN. NUMBER 3360
DATE MAY 1, 2009

| PROJECT INFORMATION | |
|---|---|
| PROGRAM | - |
| PROJECT MANAGER | WFF |
| DESIGNER | TV |
| CONSULTANT | ALLIED ENGINEERING |
| PROJECT RESIDENT | - |
| CONTRACTOR | - |
| PROJECT COMPLETION DATE | - |

MAINE DEPARTMENT OF TRANSPORTATION
ACADIA GATEWAY FACILITY
BUS MAINTENANCE FACILITY
WALL SECTIONS IX

© COPYRIGHT 2007 ALLIED ENGINEERING, INC.

SHEET NUMBER
A4.09
OF

AECOM USA, Inc.
66 Long Wharf
Boston, MA
T 617.723.1700 F 617.723.6856
AECOM
www.aecom.com

Allied Engineering
160 Veranda Street
Portland, Maine 04103
T: 207.221.3009
F: 207.221.3166
Web: www.allied-eng.net

Allied Project No: 07010
Cad File: A4.09.dwg

Filename:- Division:- Date:- Username:-
J:\PROJECTS\3700-Trenton\CAD\A\Sheet\A4.09.dwg Aug 04, 2009 - 12:38pm

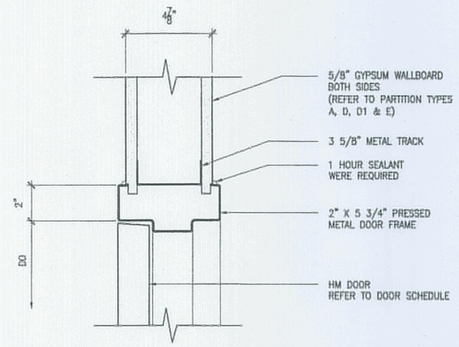


1 HEAD DETAIL
3"=1'-0"

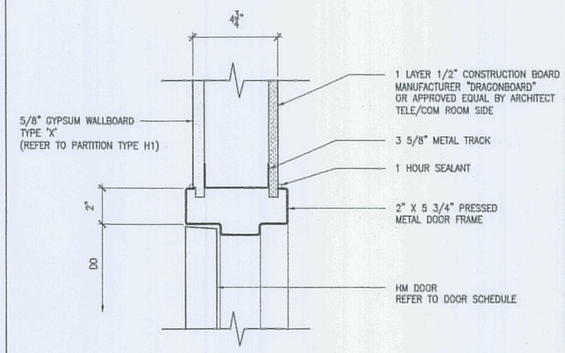


2 HEAD DETAIL
3"=1'-0"

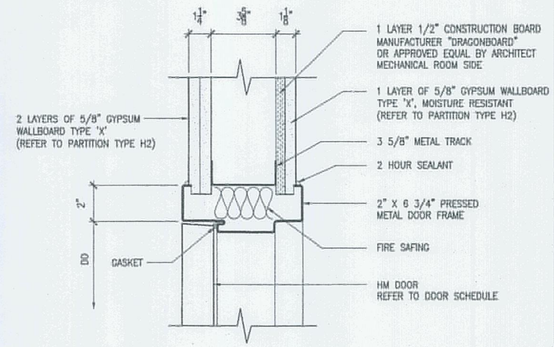


3 HEAD DETAIL
3"=1'-0"

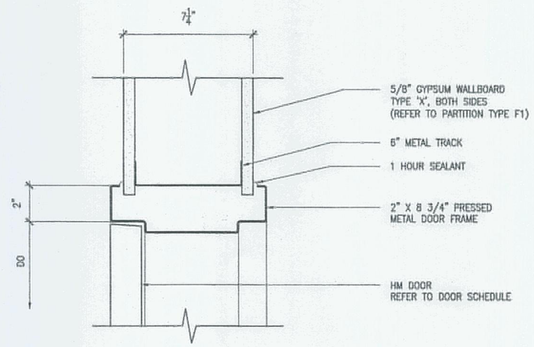


4 HEAD DETAIL
3"=1'-0"

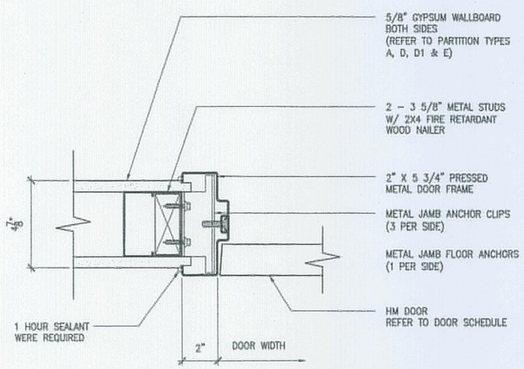


5 JAMB DETAIL
3"=1'-0"

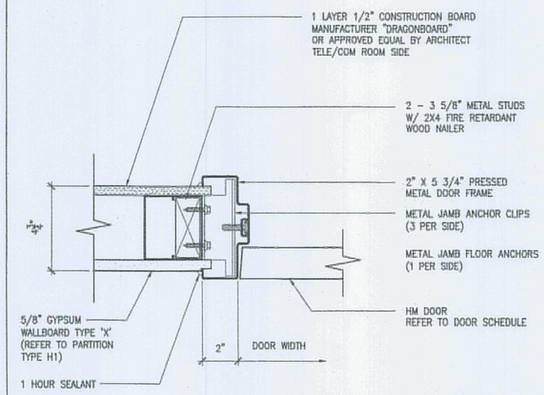


6 JAMB DETAIL
3"=1'-0"

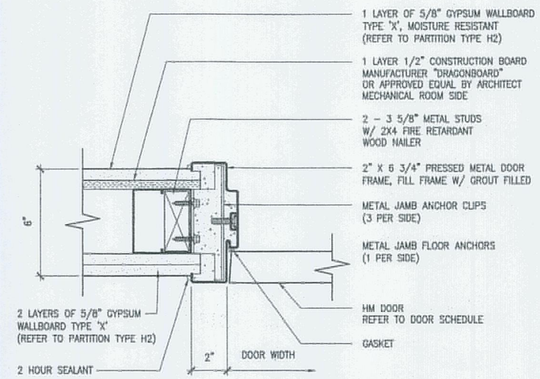


7 JAMB DETAIL
3"=1'-0"

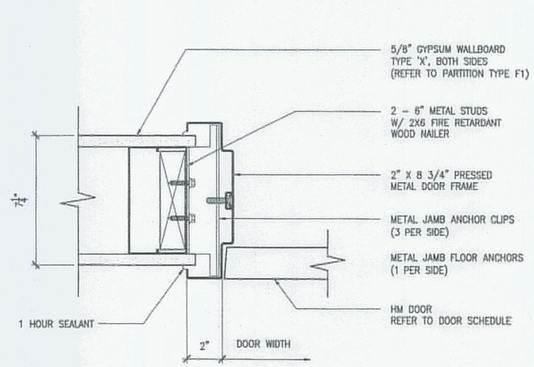


8 JAMB DETAIL
3"=1'-0"

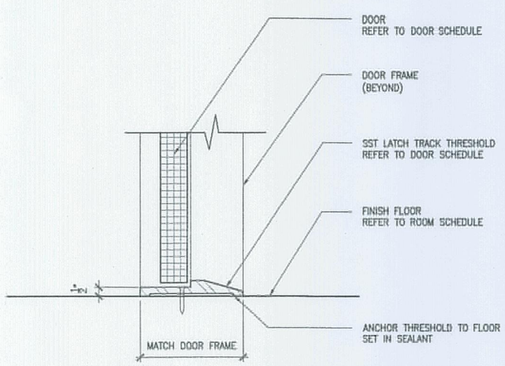


9 THRESHOLD DETAIL
3"=1'-0"

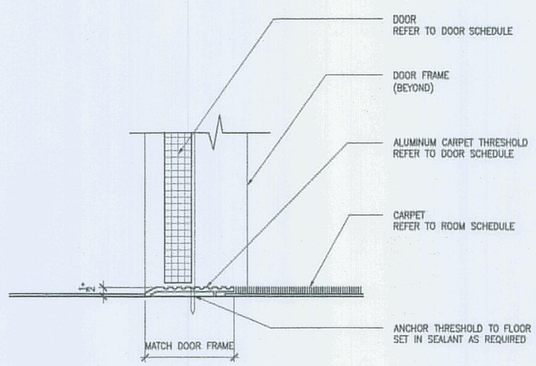


10 THRESHOLD DETAIL
3"=1'-0"

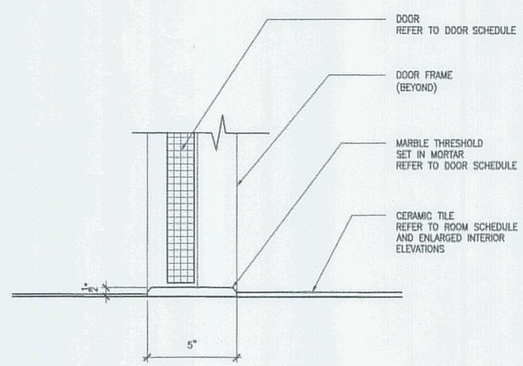


11 THRESHOLD DETAIL
3"=1'-0"

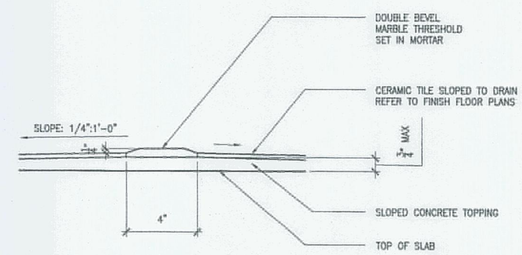


12 THRESHOLD AROUND SHOWERS DETAIL
3"=1'-0"

STATE OF MAINE
DEPARTMENT OF TRANSPORTATION

DATE

FED PIN NO:

PIN NO: 16123.50

LICENSED ARCHITECT TERRY P. ROOKARD No. 3360 STATE OF MAINE

SIGNATURE TERRY P. ROOKARD
ARCH. LIN. NUMBER 3360
DATE MAY 1, 2009

| PROJECT INFORMATION | | |
|---|---|---|
| PROGRAM | - | |
| PROJECT MANAGER | WPF | |
| DESIGNER | TV | |
| CONSULTANT | ALLIED ENGINEERING | |
| PROJECT RESIDENT | - | |
| CONTRACTOR | - | |
| PROJECT COMPLETION DATE | - | |

MAINE DEPARTMENT OF TRANSPORTATION
ACADIA GATEWAY FACILITY
BUS MAINTENANCE FACILITY

DOOR DETAILS I

© COPYRIGHT 2007 ALLIED ENGINEERING, INC.

SHEET NUMBER
A4.20
OF

AECOM USA, Inc.
66 Long Wharf
Boston, MA
T 617.723.1700 F 617.723.6856
AECOM
www.aecom.com

Allied Engineering
160 Veranda Street
Portland, Maine 04103
T: 207.231.2268
F: 207.231.2284
Web: www.allied-eng.com

Allied Project No: 07010
Cad File: A4.20.dwg

Filename: -
Date: -
Division: -
Username: -
J:\PROJECTS\3700-Trenton\CAD\A\Sheet\A4.20.dwg Aug 04, 2009 - 12:36pm

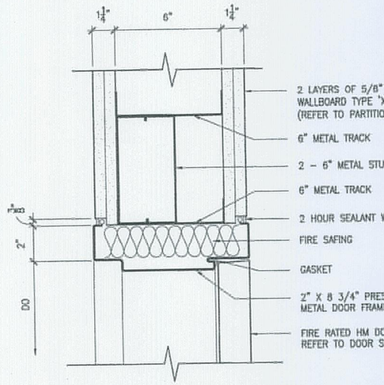


1 HEAD DETAIL
3"=1'-0"

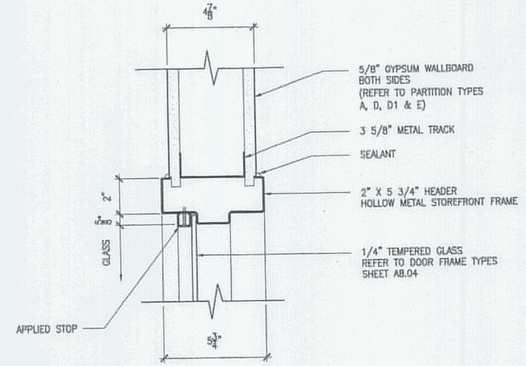


2 HEAD DETAIL
3"=1'-0"

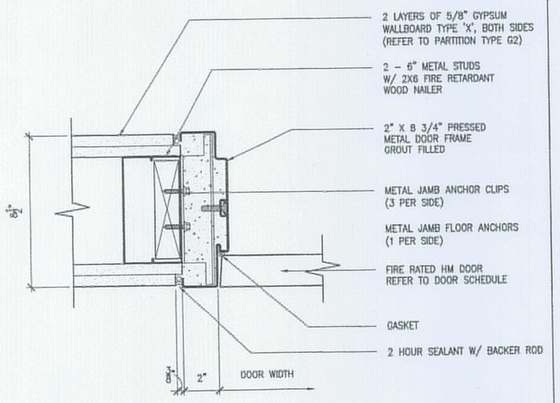


3 JAMB DETAIL
3"=1'-0"

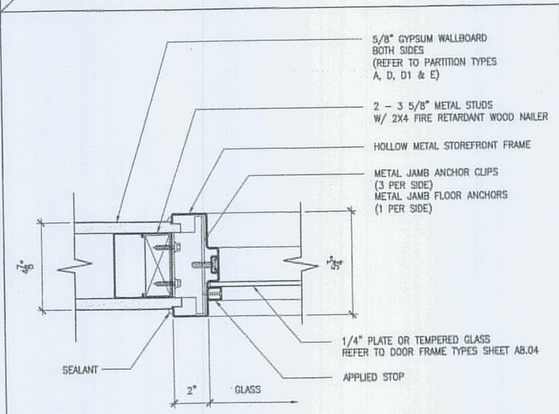


4 JAMB DETAIL
3"=1'-0"

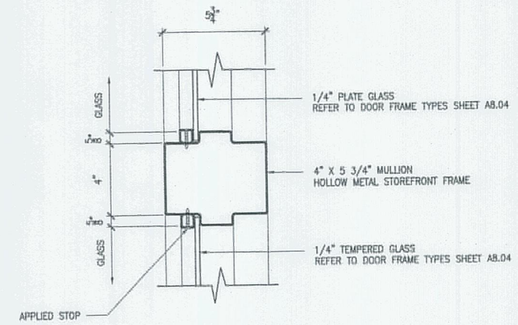


5 HORIZONTAL MULLION DETAIL
3"=1'-0"

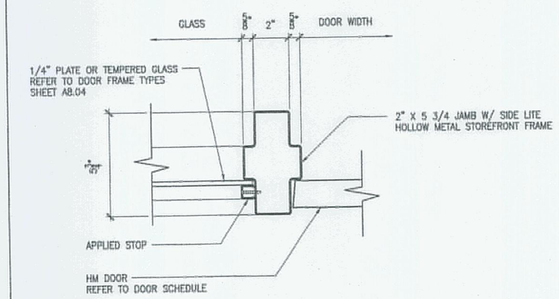


6 DOOR JAMB W/ SIDE LITE DETAIL
3"=1'-0"

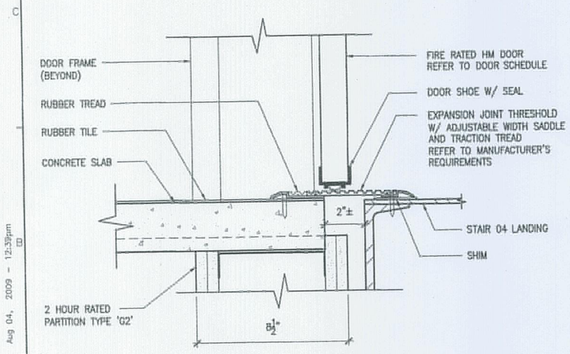


7 THRESHOLD AT EXPANSION JOINT DETAIL
3"=1'-0"

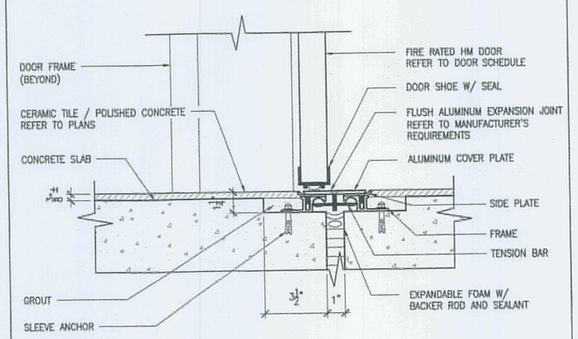


8 THRESHOLD AT EXPANSION JOINT DETAIL
3"=1'-0"

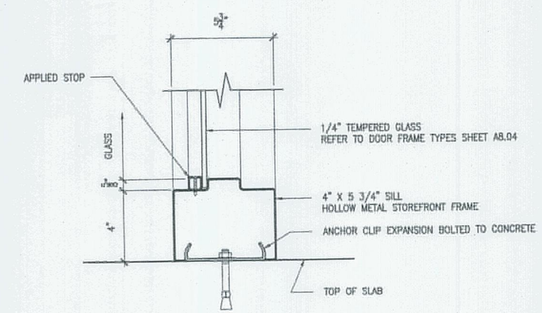


9 SILL DETAIL
3"=1'-0"

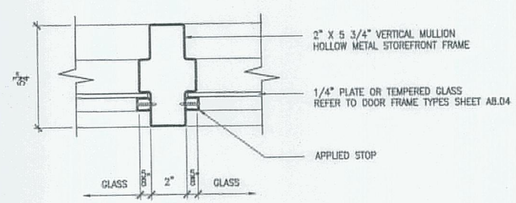


10 VERTICAL MULLION DETAIL
3"=1'-0"

NOTE: REFER TO DOOR ELEVATIONS AND DOOR SCHEDULE SHEETS FOR FRAME SIZE.


AECOM USA, Inc.
86 Long Wharf
Boston, MA
T 617.723.1700 F 617.723.6856

AECOM
www.aecom.com

Allied Engineering
Sustainable Integrated Organizations
160 Veranda Street
Portland, Maine 04103
T: 207.231.2000
F: 207.231.2245
Web: www.allied-eng.com


Allied Project No: 07010 | Cad File: A4.21.dwg

STATE OF MAINE
DEPARTMENT OF TRANSPORTATION

| | DATE |
|---|---|
| FED PIN NO: | |
| PIN NO: 16123.50 | |

LICENSED ARCHITECT TERRY P. ROOKARD No. 3360 STATE OF MAINE

| PROJECT INFORMATION | |
|---|---|
| PROGRAM | - |
| PROJECT MANAGER | WPP |
| DESIGNER | TV |
| CONSULTANT | ALLIED ENGINEERING |
| PROJECT RESIDENT | - |
| CONTRACTOR | - |
| PROJECT COMPLETION DATE | - |

SIGNATURE
TERRY P. ROOKARD
ARCH. LIN. NUMBER
3360
DATE
MAY 1, 2009

MAINE DEPARTMENT OF TRANSPORTATION
ACADIA GATEWAY FACILITY
BUS MAINTENANCE FACILITY

DOOR DETAILS II

© COPYRIGHT 2007 ALLIED ENGINEERING, INC.

SHEET NUMBER
A4.21
OF

Filename: - Date: - Division: - Username: -
J:\PROJECTS\3700-Trenton\CAD\A\Sheet\A4.21.dwg Aug 04, 2009 - 12:39pm

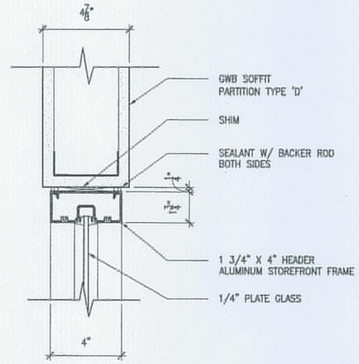


1 HEAD DETAIL
3"=1'-0"

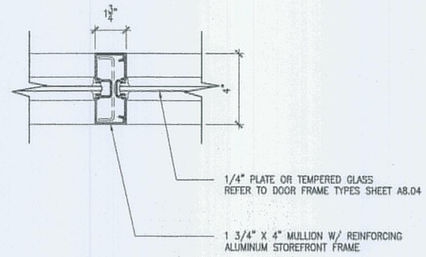


2 VERTICAL MULLION DETAIL
3"=1'-0"

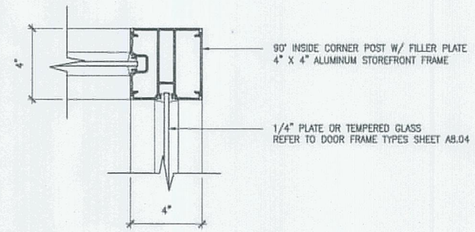


3 CORNER POST JAMB DETAIL
3"=1'-0"

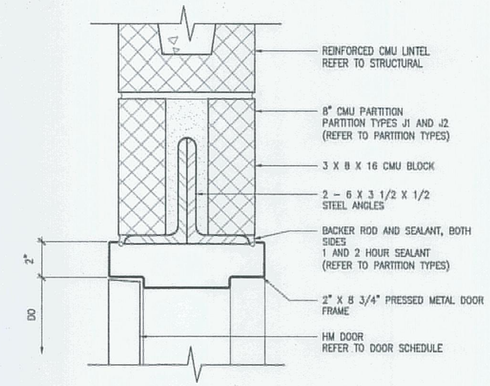


4 CMU HEADER DETAIL
3"=1'-0"

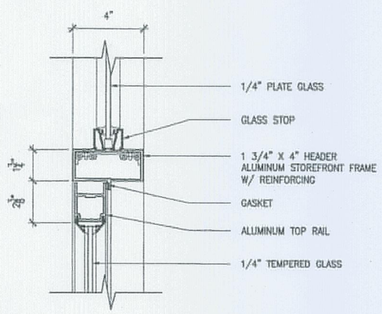


5 HEAD AND TRANSOM DETAIL
3"=1'-0"

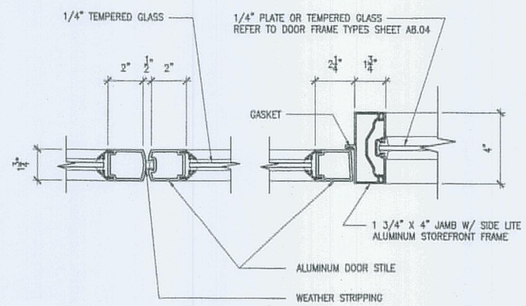


6 DOOR JAMB W/ SIDE LITE DETAIL
3"=1'-0"

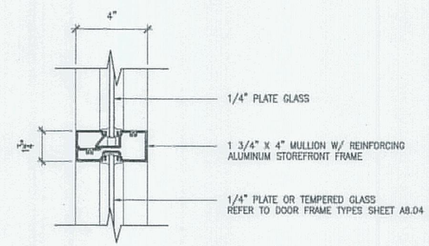


7 HORIZONTAL MULLION DETAIL
3"=1'-0"

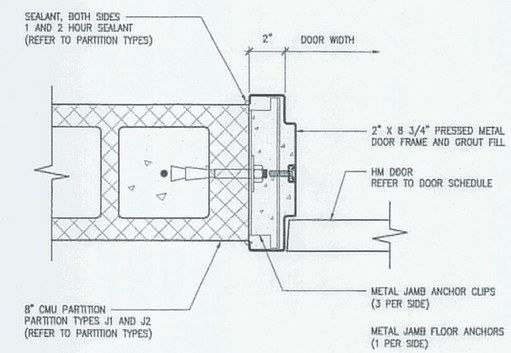


8 CMU JAMB DETAIL
3"=1'-0"

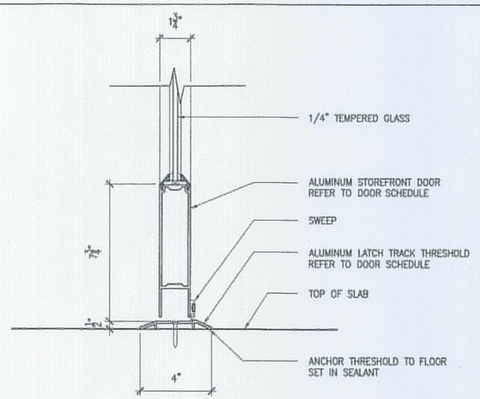


9 THRESHOLD DETAIL
3"=1'-0"

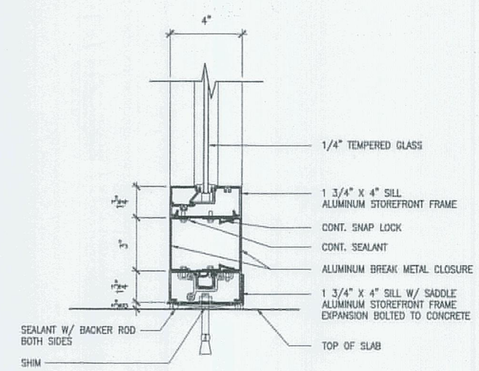


10 SILL DETAIL
3"=1'-0"

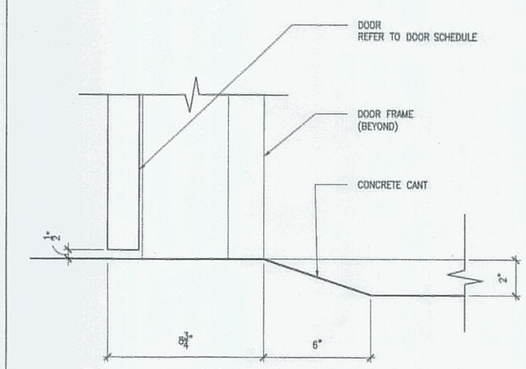


11 THRESHOLD DETAIL
3"=1'-0"

NOTE: REFER TO DOOR ELEVATIONS AND DOOR SCHEDULE SHEETS FOR FRAME SIZE.


AECOM USA, Inc.
66 Long Wharf
Boston, MA
T 617.723.1700 F 617.723.6856

AECOM
www.aecom.com

Allied Engineering
160 Veranda Street
Portland, Maine 04103
T: 207.221.3268
F: 207.221.3266
Web: www.allied-eng.com


Allied Project No: 07010 | Cad File: A4.22.dwg

STATE OF MAINE
DEPARTMENT OF TRANSPORTATION

| | DATE |
|---|---|
| FED PIN NO: | |
| PIN NO: 16123.50 | |

LICENSED ARCHITECT TERRY P. ROOKARD No. 3360 STATE OF MAINE

| PROJECT INFORMATION | | |
|---|---|---|
| PROGRAM | - | |
| PROJECT MANAGER | WFP | SIGNATURE TERRY P. ROOKARD |
| DESIGNER | TV | ARCH. LIN. NUMBER 3360 |
| CONSULTANT | ALLIED ENGINEERING | |
| PROJECT RESIDENT | - | DATE MAY 1, 2009 |
| CONTRACTOR | - | |
| PROJECT COMPLETION DATE | - | |

MAINE DEPARTMENT OF TRANSPORTATION
ACADIA GATEWAY FACILITY
BUS MAINTENANCE FACILITY

DOOR DETAILS III

© COPYRIGHT 2007 ALLIED ENGINEERING, INC.

SHEET NUMBER
A4.22
OF

Filename:- Division:- Date:- Username:-
J:\PROJECTS\3760-Trenton\CAD\A\Sheet\A4.22.dwg Aug 04, 2009 - 12:39pm

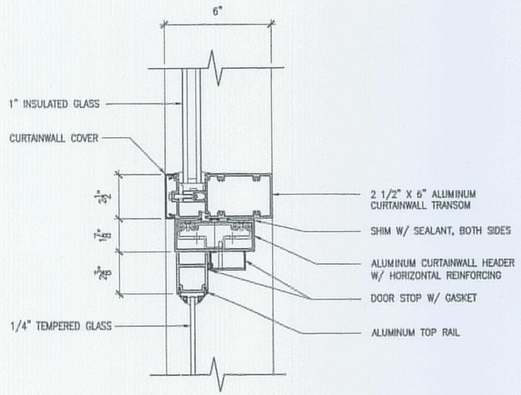


1 HEAD DETAIL
3"=1'-0"

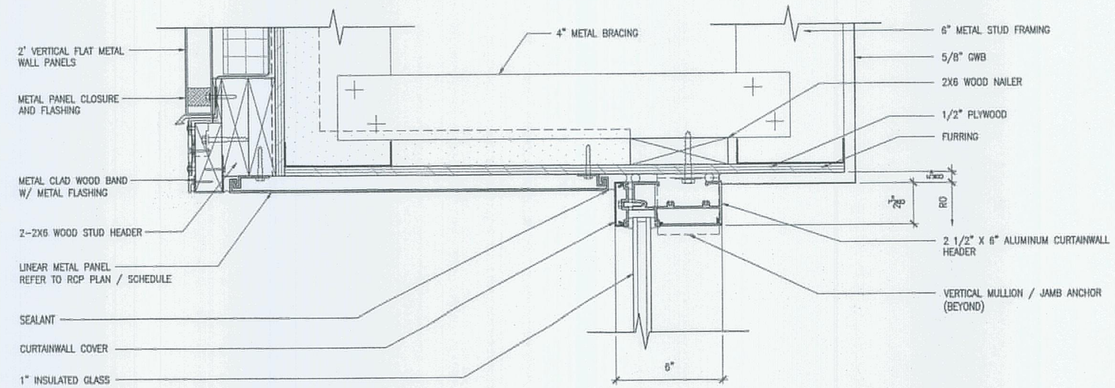


2 HEAD DETAIL
3"=1'-0"

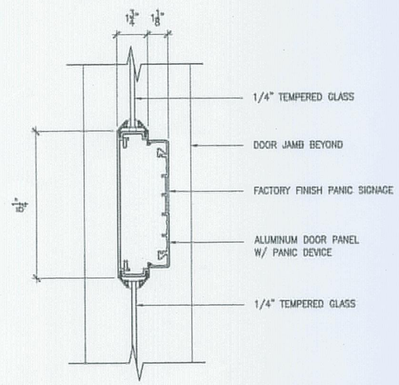


3 DOOR PANEL PANIC DEVICE DETAIL
3"=1'-0"

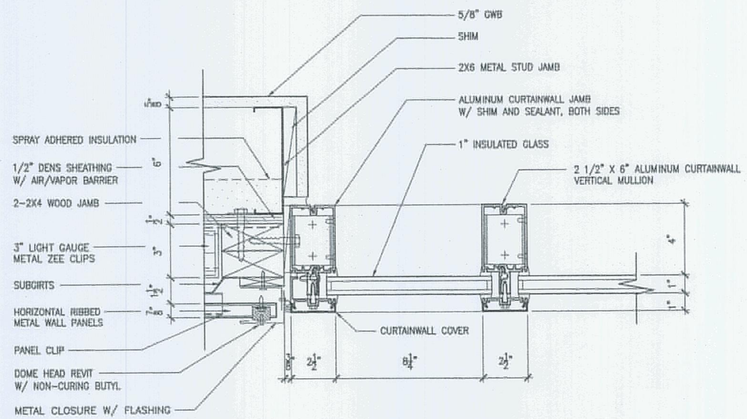


4 JAMB DETAIL
3"=1'-0"
REFER TO DETAIL 1/A4.25

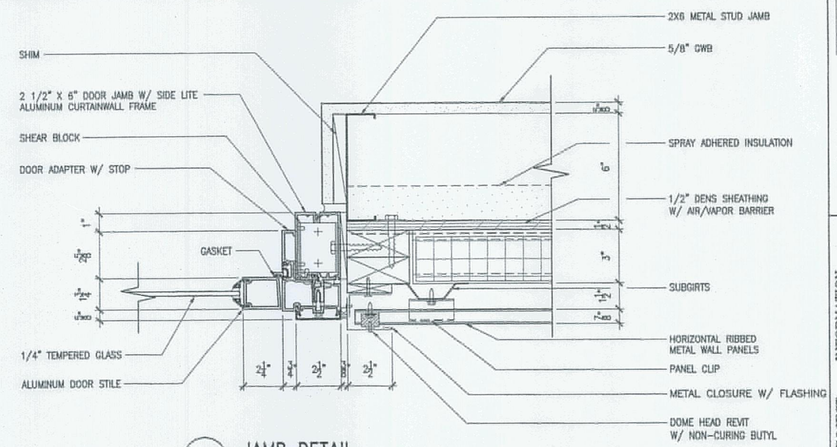


5 JAMB DETAIL
3"=1'-0"

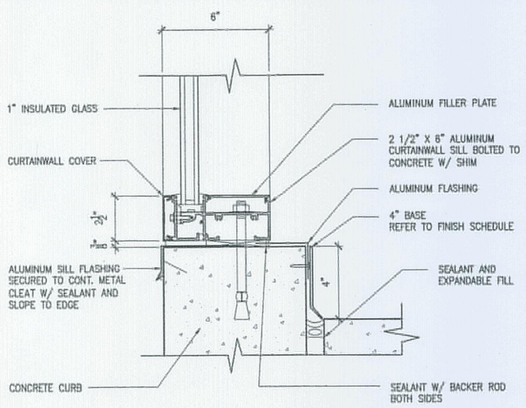


6 SILL DETAIL
3"=1'-0"

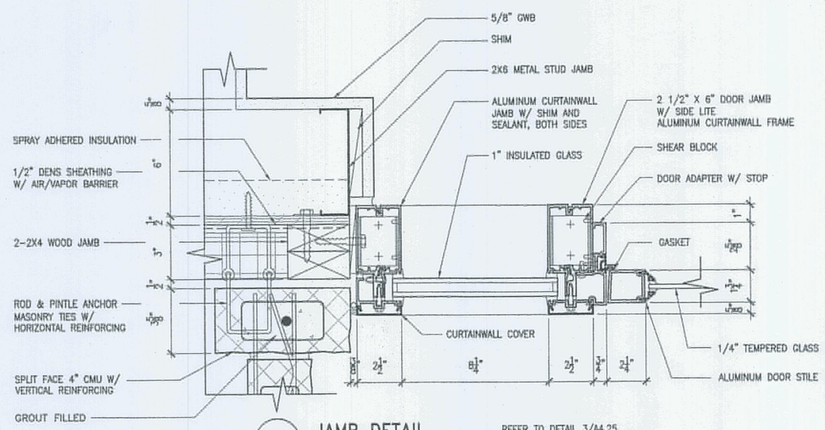


7 JAMB DETAIL
3"=1'-0"
REFER TO DETAIL 3/A4.25

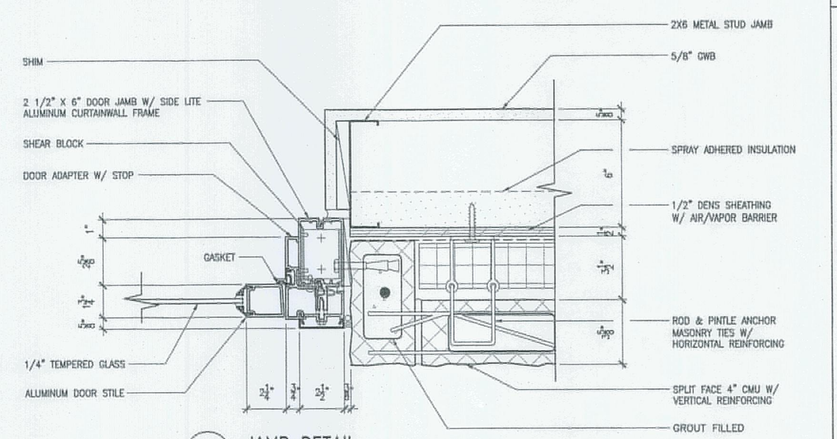


8 JAMB DETAIL
3"=1'-0"

NOTE: REFER TO DOOR ELEVATIONS AND DOOR SCHEDULE SHEETS FOR FRAME SIZE.


AECOM USA, Inc.
66 Long Wharf
Boston, MA
T 617.723.1700 F 617.723.6856

AECOM
www.aecom.com

Allied Engineering
160 Veranda Street
Portland, Maine 04103
T: 207.231.2350
F: 207.231.2246
Web: www.allied-eng.com


Allied Project No: 07010 | Cad File: A4.23.dwg

STATE OF MAINE
DEPARTMENT OF TRANSPORTATION

| | DATE |
|---|---|
| | |
| FED PIN NO: | |
| PIN NO: 16123.50 | |

LICENSED ARCHITECT TERRY P. ROOKARD No. 3360 STATE OF MAINE

| INFORMATION | |
|---|---|
| SIGNATURE | TERRY P. ROOKARD |
| ARCH. LIN. NUMBER | 3360 |
| DATE | MAY 1, 2009 |

| PROJECT INFORMATION | |
|---|---|
| PROGRAM | - |
| PROJECT MANAGER | WFP |
| DESIGNER | TV |
| CONSULTANT | ALLIED ENGINEERING |
| PROJECT RESIDENT | - |
| CONTRACTOR | - |
| PROJECT COMPLETION DATE | - |

MAINE DEPARTMENT OF TRANSPORTATION
ACADIA GATEWAY FACILITY
BUS MAINTENANCE FACILITY

DOOR DETAILS IV

© COPYRIGHT 2007 ALLIED ENGINEERING, INC.

SHEET NUMBER
A4.23
OF

Filename: - Date: - Division: - Username: -
J:\PROJECTS\3700-Trenton\CAD\A\Sheet\A4.23.dwg Aug 04, 2009 - 12:39pm

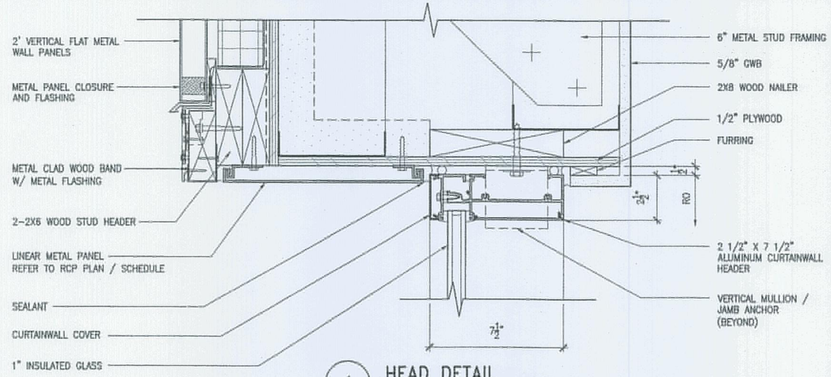


1 HEAD DETAIL
3"=1'-0"

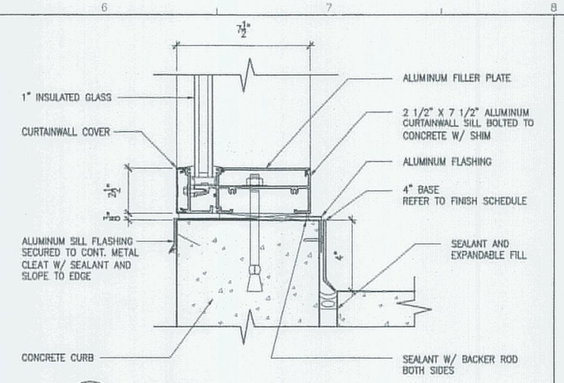


2 SILL DETAIL
3"=1'-0"

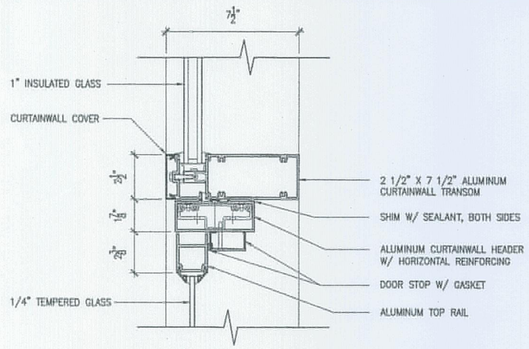


3 HEAD AND TRANSOM DETAIL
3"=1'-0"

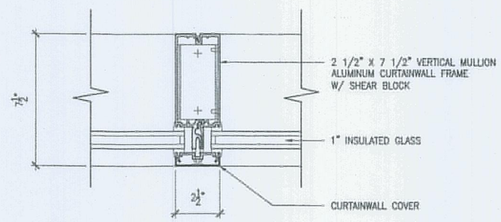


4 VERTICAL MULLION DETAIL
3"=1'-0" HORIZONTAL MULLION DETAIL SIMILAR

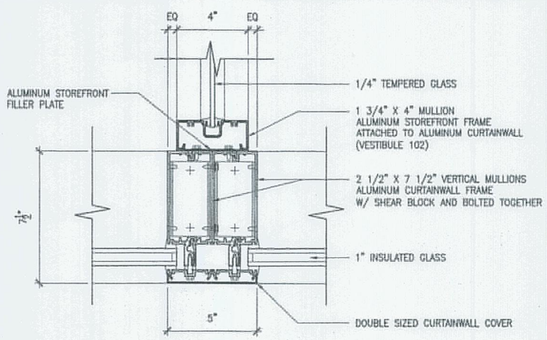


5 VERTICAL MULLION DETAIL
3"=1'-0"

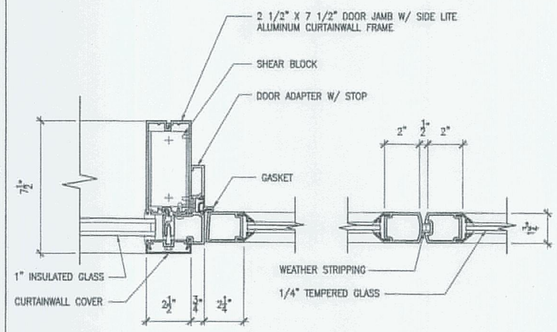


6 DOOR JAMB W/ SIDE LITE DETAIL
3"=1'-0"

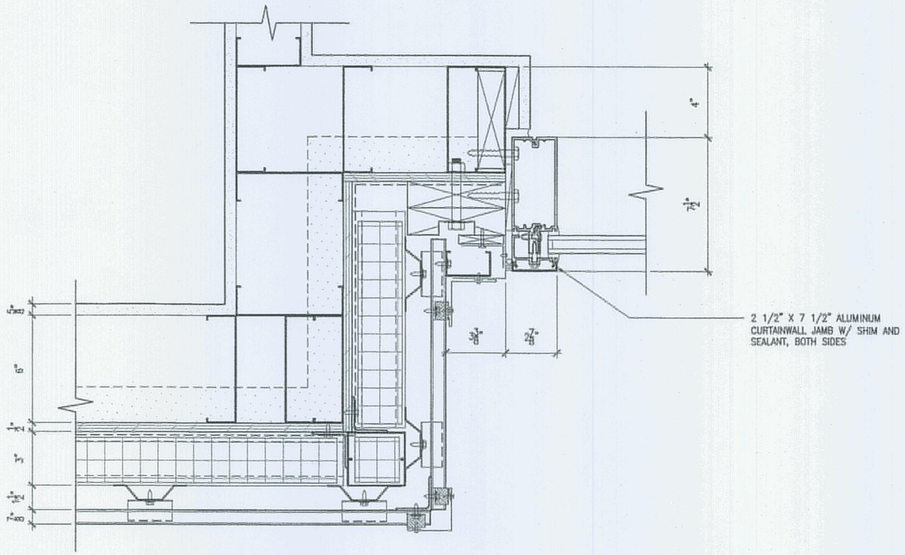


7 PLAN DETAIL
3"=1'-0"

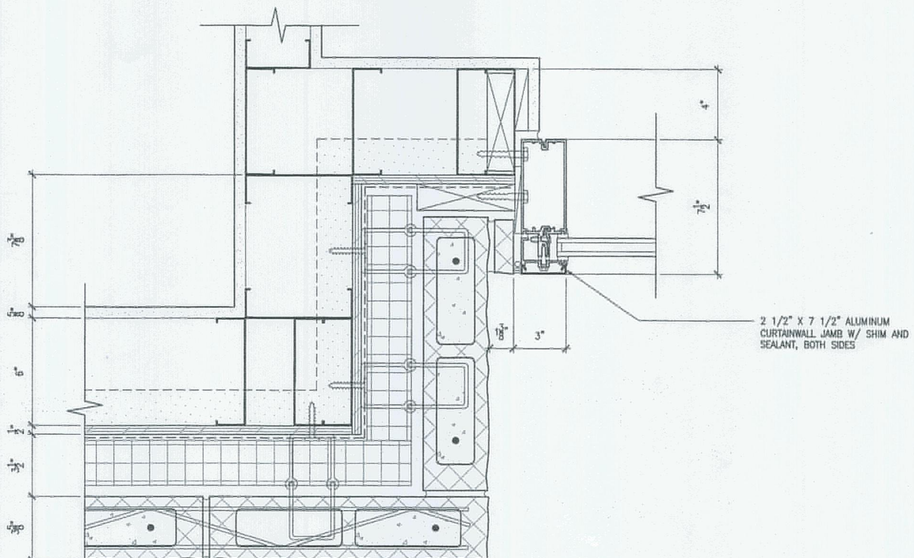


8 PLAN DETAIL
3"=1'-0"

NOTE: REFER TO DOOR ELEVATIONS AND DOOR SCHEDULE SHEETS FOR FRAME SIZE.


AECOM USA, Inc.
66 Long Wharf
Boston, MA
T 617.723.1700 F 617.723.6856

AECOM
www.aecom.com

Allied Engineering
160 Veranda Street
Portland, Maine 04103
T: 207.231.1020
F: 207.231.1264
Web: www.allied-engineering.com


Allied Project No: 07010 | Cad File: A4.24.dwg

STATE OF MAINE
DEPARTMENT OF TRANSPORTATION

DATE

FED PIN NO:

PIN NO: 16123.50

LICENSED ARCHITECT TERRY P. ROOKARD No. 3360 STATE OF MAINE

SIGNATURE
TERRY P. ROOKARD
ARCH. LIN. NUMBER
3360
DATE MAY 1, 2009

| PROJECT INFORMATION | |
|---|---|
| PROGRAM | - |
| PROJECT MANAGER | WFP |
| DESIGNER | TV |
| CONSULTANT | ALLIED ENGINEERING |
| PROJECT RESIDENT | - |
| CONTRACTOR | - |
| PROJECT COMPLETION DATE | - |

MAINE DEPARTMENT OF TRANSPORTATION
ACADIA GATEWAY FACILITY
BUS MAINTENANCE FACILITY

DOOR DETAILS V

© COPYRIGHT 2007 ALLIED ENGINEERING, INC.

SHEET NUMBER
A4.24
OF

Filename:- Division:- Date:- Username:-
J:\PROJECTS\3700-Trenton\CADD\A\Sheet\A4.24.dwg Aug 04, 2009 - 12:39pm

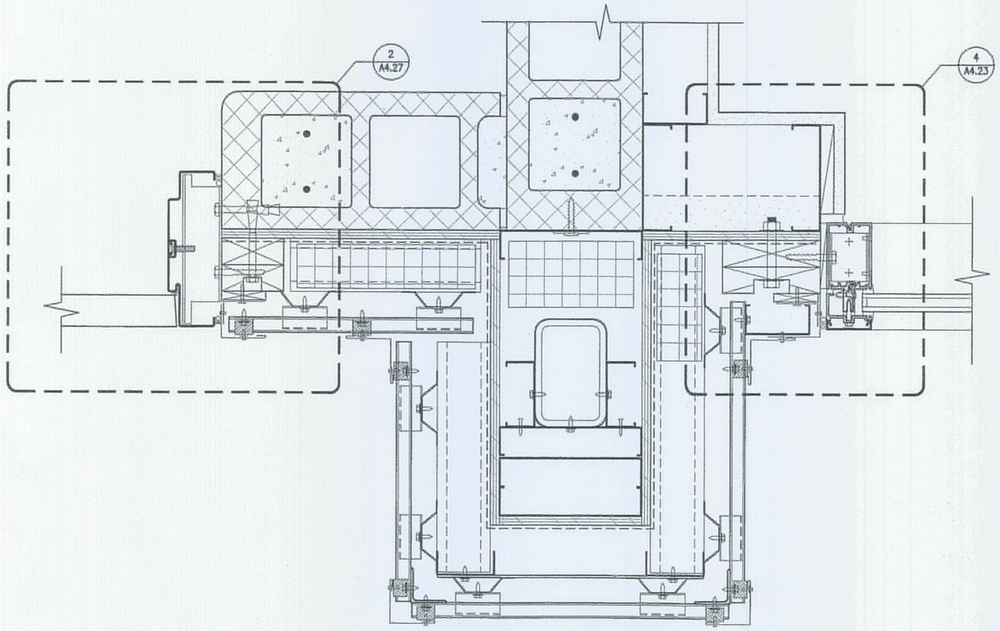


1 PLAN DETAIL
3"=1'-0"

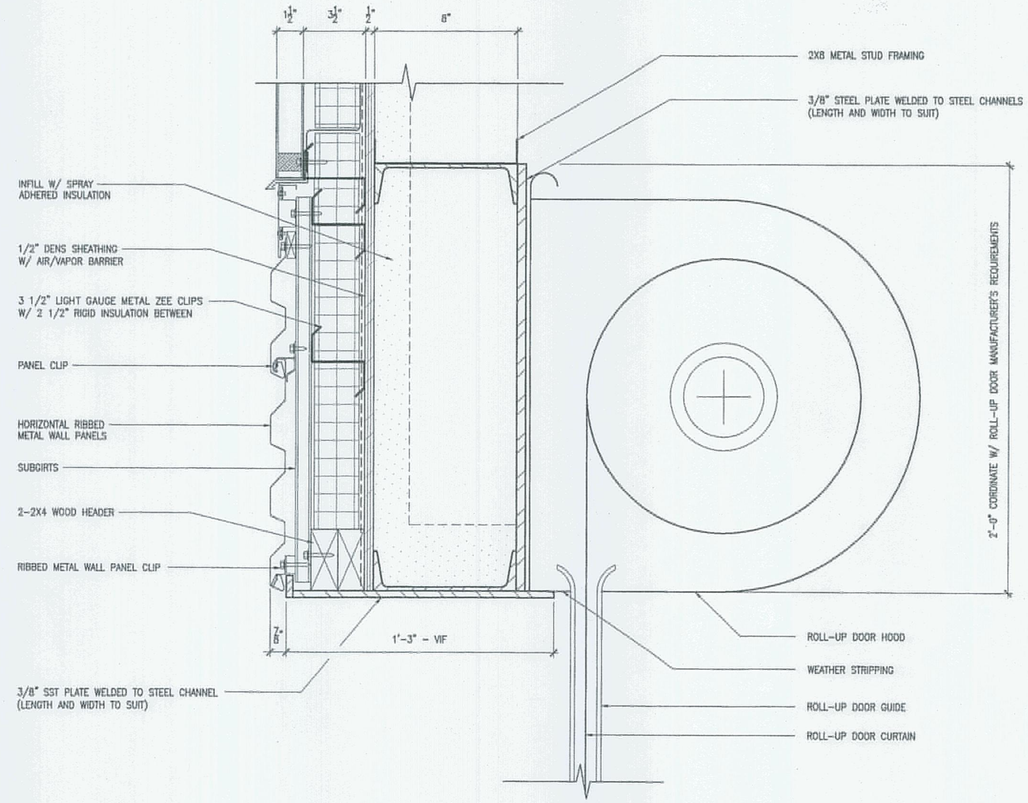


2 ROLL-UP DOOR HEAD DETAIL
3"=1'-0"

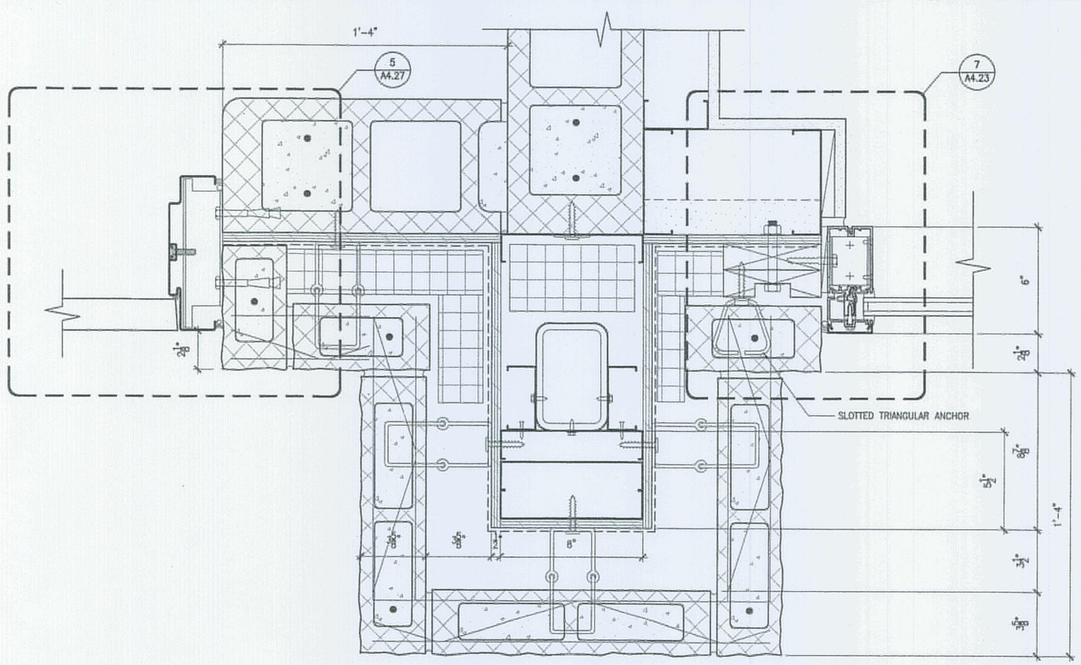


3 PLAN DETAIL
3"=1'-0"

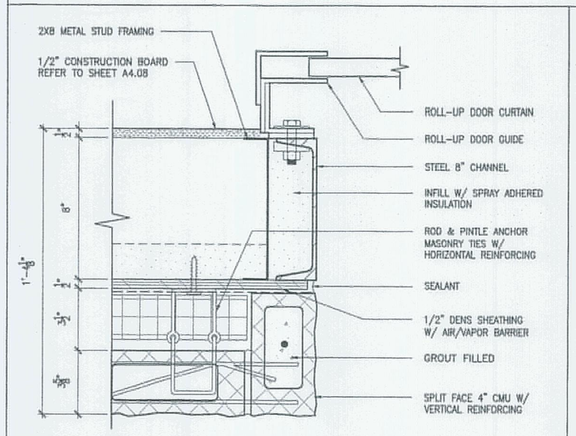


4 ROLL-UP DOOR JAMB DETAIL
3"=1'-0"

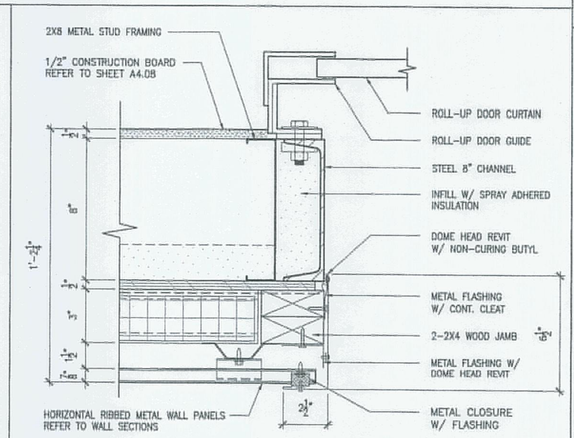


5 ROLL-UP DOOR JAMB DETAIL
3"=1'-0"

NOTE: REFER TO DOOR ELEVATIONS AND DOOR SCHEDULE SHEETS FOR FRAME SIZE.

TRANSPORTATION

AECOM USA, Inc.
66 Long Wharf
Boston, MA
T 617.723.1700 F 617.723.6856

AECOM
www.aecom.com

Allied Engineering
Structural Mechanical Electrical Civil Consulting
160 Veranda Street
Portland, Maine 04103
T: 207.237.2260
F: 207.237.2266
Web: www.allied-eng.com

Allied Project No: 07010 | Cad File: A4.25.dwg

STATE OF MAINE
DEPARTMENT OF TRANSPORTATION

| DATE | |
|---|---|
| | |

FED PIN NO:
PIN NO: 16123.50

LICENSED ARCHITECT TERRY P. ROOKARD No. 3360 STATE OF MAINE

SIGNATURE
TERRY P. ROOKARD
ARCH. LIN. NUMBER
3360
DATE MAY 1, 2009

PROJECT INFORMATION

| | |
|---|---|
| PROGRAM | - |
| PROJECT MANAGER | WPP |
| DESIGNER | TV |
| CONSULTANT | ALLIED ENGINEERING |
| PROJECT RESIDENT | - |
| CONTRACTOR | - |
| PROJECT COMPLETION DATE | - |

MAINE DEPARTMENT OF TRANSPORTATION
ACADIA GATEWAY FACILITY
BUS MAINTENANCE FACILITY

DOOR DETAILS VI

© COPYRIGHT 2007 ALLIED ENGINEERING, INC.

SHEET NUMBER
A4.25
OF

Filename: - Date: - Division: - Username: -
J:\PROJECTS\3700-Trenton\CAD\A\Sheet\A4.25.dwg Aug 04, 2009 - 12:39pm

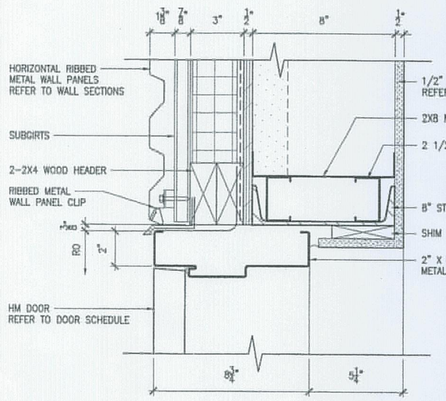


1 HEAD DETAIL
3"=1'-0"

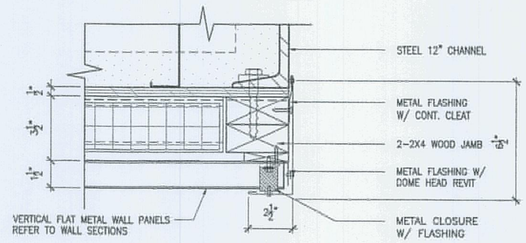


2 JAMB DETAIL
3"=1'-0"

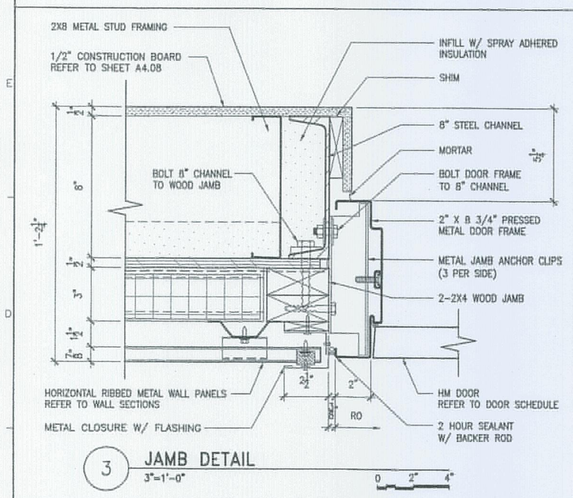


3 JAMB DETAIL
3"=1'-0"

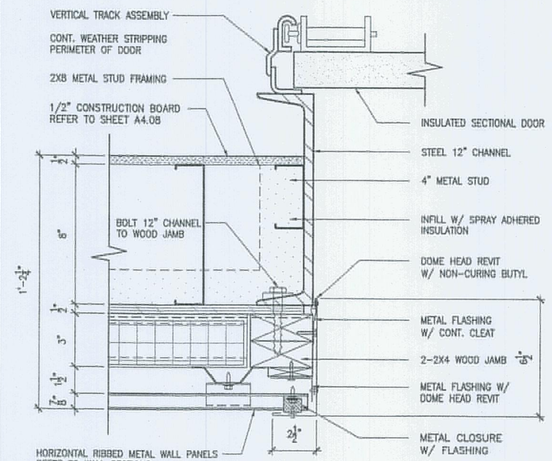


4 JAMB DETAIL
3"=1'-0"

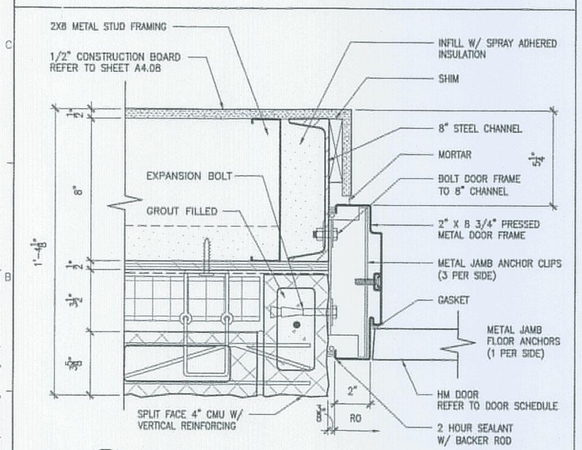


5 JAMB DETAIL
3"=1'-0"

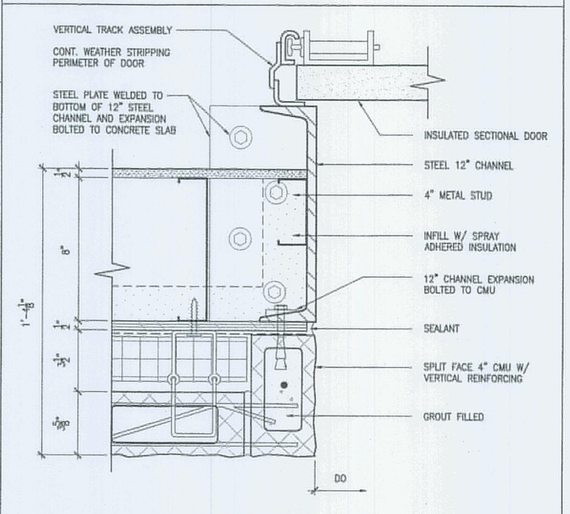


6 JAMB DETAIL
3"=1'-0"

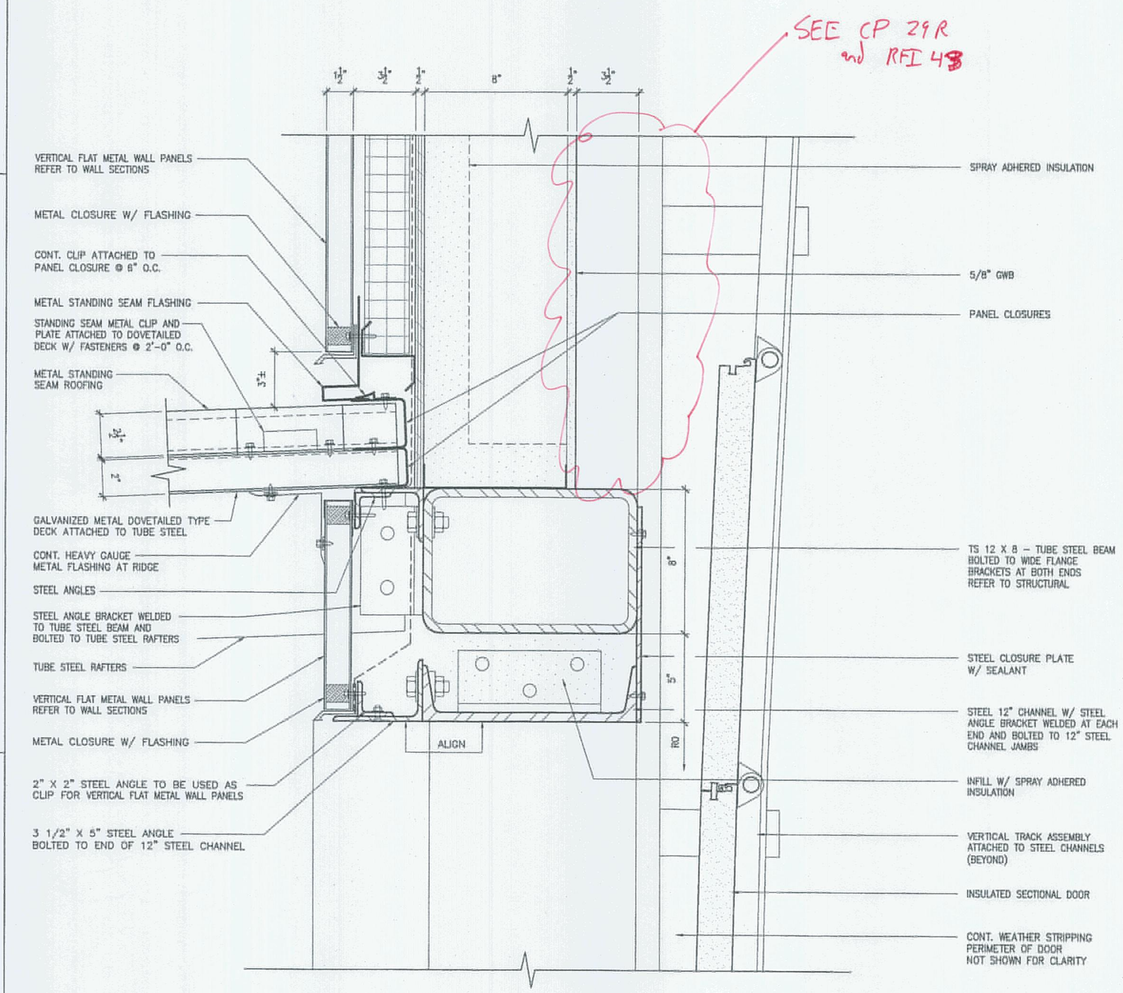


7 HEAD DETAIL
3"=1'-0"

NOTE: REFER TO DOOR ELEVATIONS AND DOOR SCHEDULE SHEETS FOR FRAME SIZE.

STATE OF MAINE
DEPARTMENT OF TRANSPORTATION

| | DATE |
|---|---|
| | |
| FED PIN NO: | |
| PIN NO: 16123.50 | |

LICENSED ARCHITECT TERRY P. ROOKARD No. 3360 STATE OF MAINE

| | |
|---|---|
| SIGNATURE | |
| TERRY P. ROOKARD | |
| ARCH. LIN. NUMBER | 3360 |
| DATE | MAY 1, 2009 |

| PROJECT INFORMATION | |
|---|---|
| PROGRAM | - |
| PROJECT MANAGER | WPF |
| DESIGNER | TV |
| CONSULTANT | ALLIED ENGINEERING |
| PROJECT RESIDENT | - |
| CONTRACTOR | - |
| PROJECT COMPLETION DATE | - |

MAINE DEPARTMENT OF TRANSPORTATION
ACADIA GATEWAY FACILITY
BUS MAINTENANCE FACILITY

DOOR DETAILS VII

© COPYRIGHT 2007 ALLIED ENGINEERING, INC.

SHEET NUMBER
A4.26
OF

TRANSPORTATION
AECOM USA, Inc.
66 Long Wharf
Boston, MA
T 617.723.1700 F 617.723.6856
AECOM
www.aecom.com

Allied Engineering
160 Veranda Street
Portland, Maine 04103
T: 207.221.2760
F: 207.221.2266
Web: www.alliedengineering.com

Allied Project No: 07010
Cad File: A4.26.dwg

Filename:- Division:- Date:- Username:-
J:\PROJECTS\3700-Trenton\CAD\A\Sheet\A4.26.dwg Aug 04, 2009 - 12:39pm

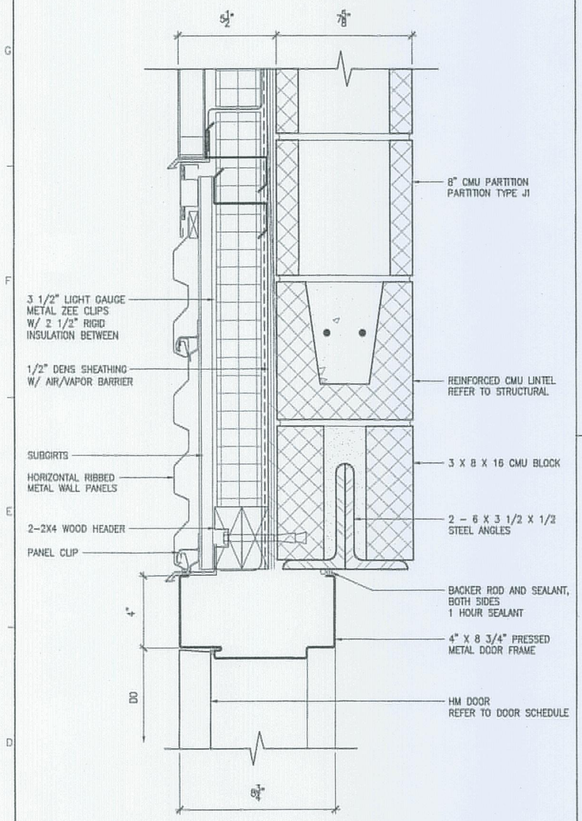


1 CMU HEAD DETAIL
3"=1'-0"

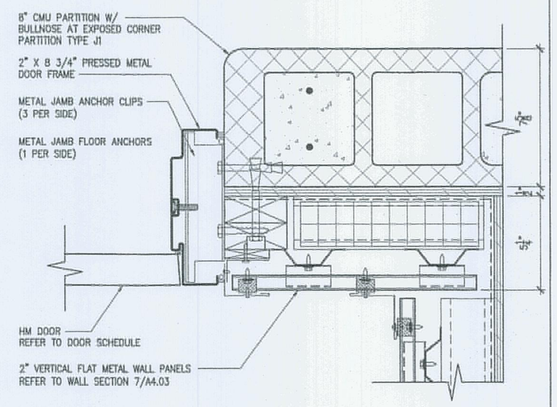


2 CMU JAMB DETAIL
3"=1'-0"

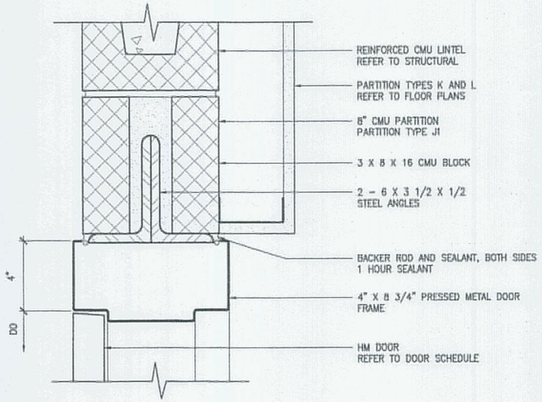


3 CMU HEADER DETAIL
3"=1'-0"

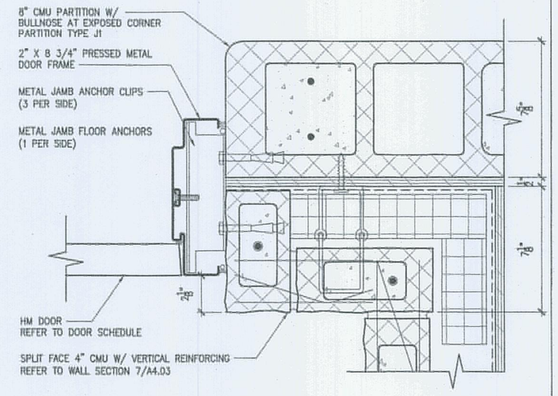


4 CMU JAMB DETAIL
3"=1'-0"

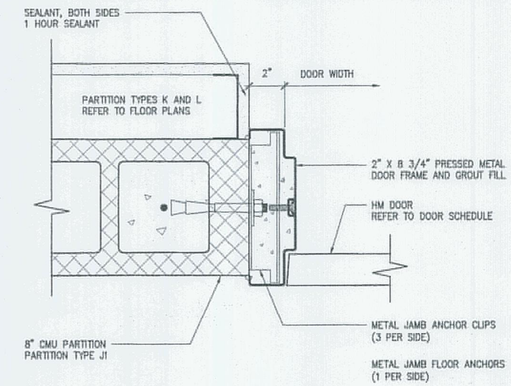


5 CMU JAMB DETAIL
3"=1'-0"

STATE OF MAINE
DEPARTMENT OF TRANSPORTATION

| | DATE |
|---|---|
| FED PIN NO: | |
| PIN NO: 16123.50 | |

LICENSED ARCHITECT TERRY P. ROOKARD No. 3360 STATE OF MAINE

| PROJECT INFORMATION | |
|---|---|
| PROGRAM | - |
| PROJECT MANAGER | WFP |
| DESIGNER | TV |
| CONSULTANT | ALLIED ENGINEERING |
| PROJECT RESIDENT | - |
| CONTRACTOR | - |
| PROJECT COMPLETION DATE | - |

SIGNATURE
TERRY P. ROOKARD
ARCH. LIN. NUMBER
3360
DATE MAY 1, 2009

MAINE DEPARTMENT OF TRANSPORTATION
ACADIA GATEWAY FACILITY
BUS MAINTENANCE FACILITY

DOOR DETAILS VIII

© COPYRIGHT 2007 ALLIED ENGINEERING, INC.

SHEET NUMBER
A4.27
OF

TRANSPORTATION

AECOM USA, Inc.
66 Long Wharf
Boston, MA
T 617.723.1700 F 617.723.6856

AECOM
www.aecom.com

Allied Engineering
Mechanical Electrical Plumbing
160 Veranda Street
Portland, Maine 04103
T: 207.231.2068
F: 207.231.2586
Web: www.allied-eng.com

Allied Project No: 07010
Cad File: A4.27.dwg

Filename: -
Date: -
Division: -
Username: -

J:\PROJECTS\3700-Trenton\CAD\A\Sheet\A4.27.dwg Aug 04, 2009 - 12:39pm

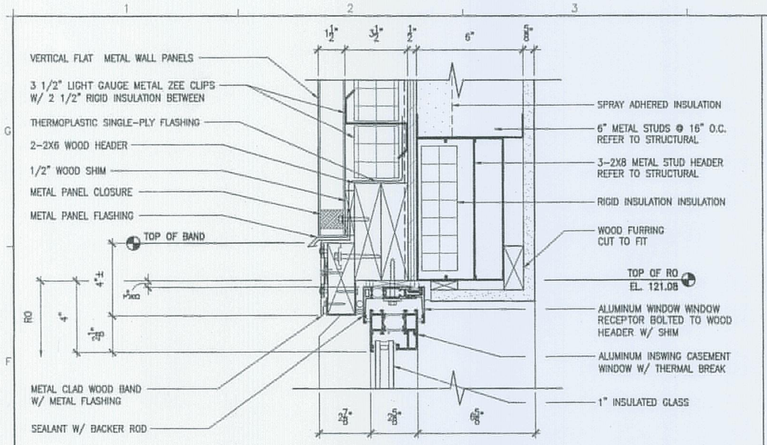


WH1 HEADER DETAIL @ ADMIN. BLDG.
3"=1'-0"

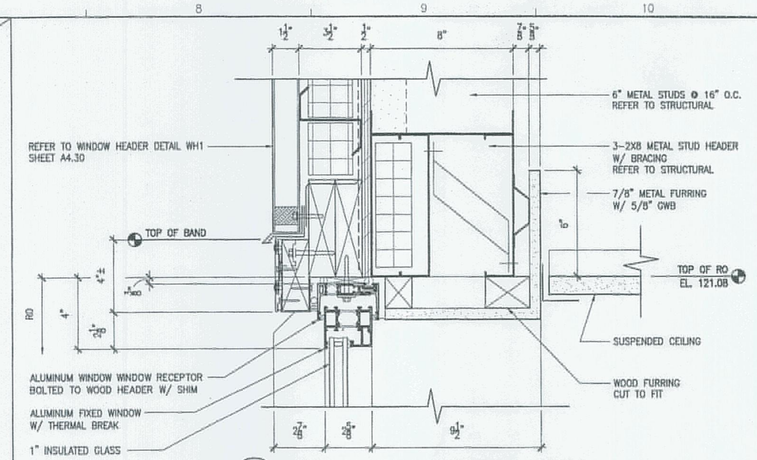


WH2 HEADER DETAIL @ MAINT. OFFICE
3"=1'-0"

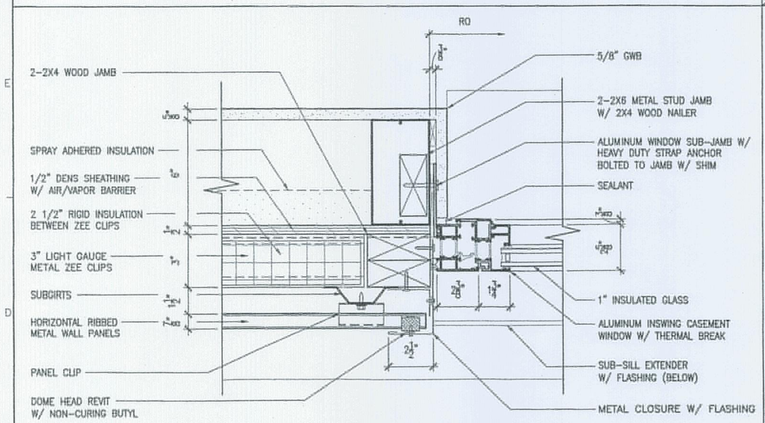


WJ1 JAMB DETAIL @ ADMIN. BLDG. - INSWING
3"=1'-0"

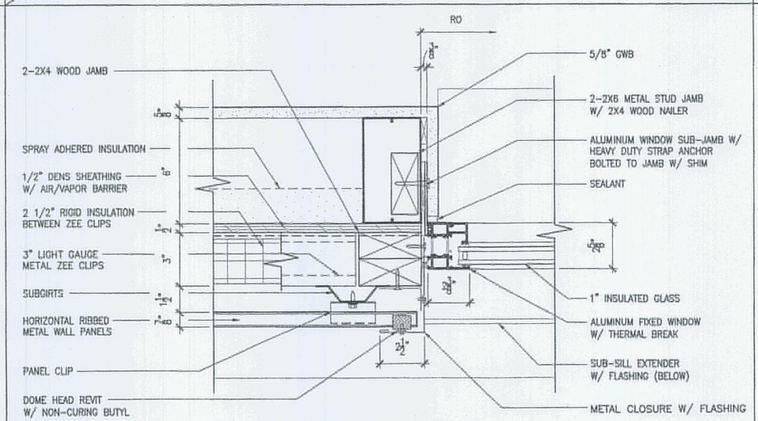


WJ2 JAMB DETAIL @ ADMIN. BLDG. - FIXED
3"=1'-0"

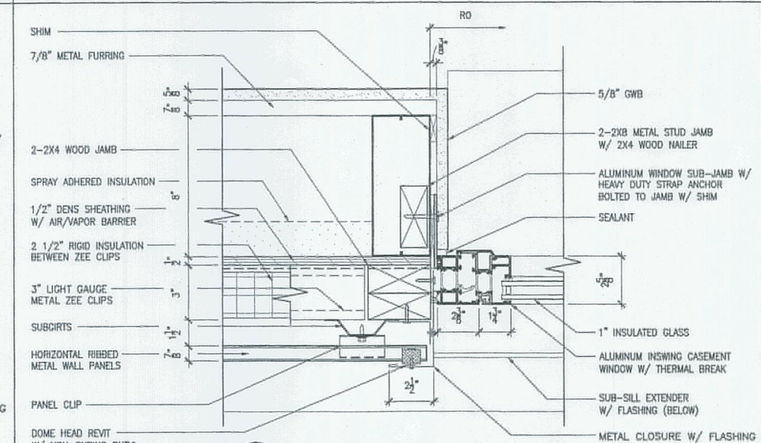


WJ3 JAMB DETAIL @ MAINT. OFFICE
3"=1'-0"

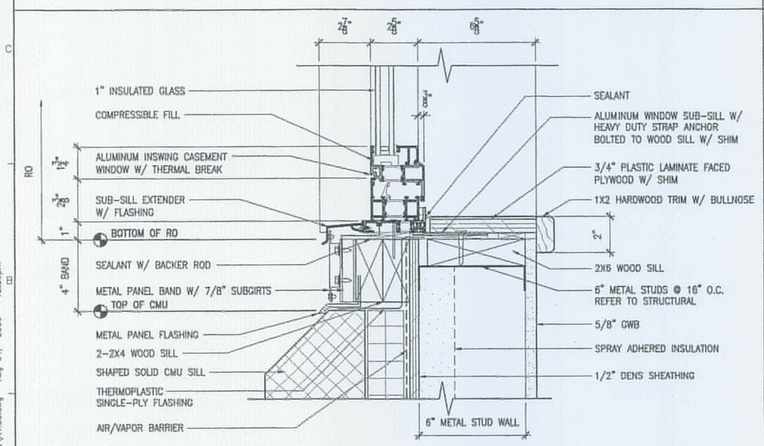


WS1 SILL DETAIL @ ADMIN. BLDG. - INSWING
3"=1'-0"

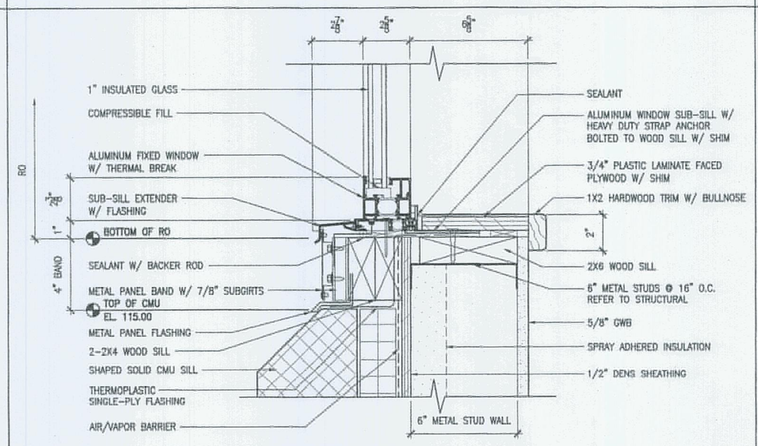


WS2 SILL DETAIL @ ADMIN. BLDG. - FIXED
3"=1'-0"

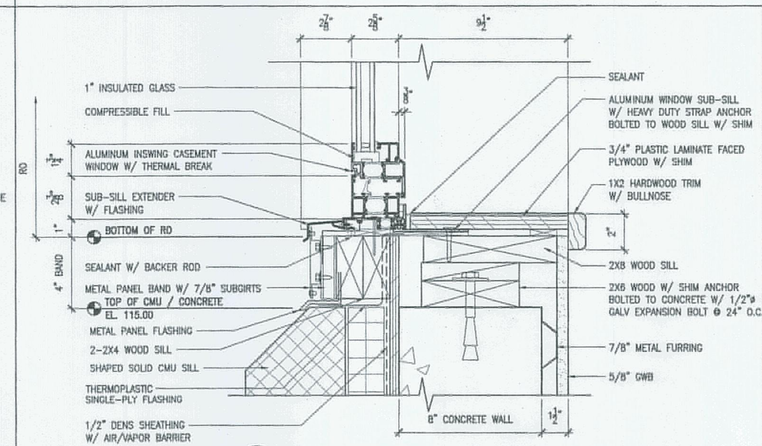


WS3 SILL DETAIL @ MAINT. OFFICE
3"=1'-0"

NOTE: REFER TO WINDOW ELEVATIONS AND WINDOW SCHEDULE SHEETS FOR FRAME SIZE.


AECOM USA, Inc.
66 Long Wharf
Boston, MA
T 617.723.1700 F 617.723.6856

AECOM
www.aecom.com

Allied Engineering
160 Veranda Street
Portland, Maine 04103
T: 207.221.2360
F: 207.221.2366
Web: www.allied-eng.com


Allied Project No: 07010 | Cad File: A4.30.dwg

STATE OF MAINE
DEPARTMENT OF TRANSPORTATION

| | DATE |
|---|---|
| | |

FED PIN NO:
PIN NO: 16123.50

LICENSED ARCHITECT TERRY P. ROOKARD No. 3360 STATE OF MAINE

SIGNATURE
TERRY P. ROOKARD
ARCH. LIN. NUMBER 3360
DATE MAY 1, 2009

PROJECT INFORMATION

| | |
|---|---|
| PROGRAM | - |
| PROJECT MANAGER | WFF |
| DESIGNER | TV |
| CONSULTANT | ALLIED ENGINEERING |
| PROJECT RESIDENT | - |
| CONTRACTOR | - |
| PROJECT COMPLETION DATE | - |

MAINE DEPARTMENT OF TRANSPORTATION
ACADIA GATEWAY FACILITY
BUS MAINTENANCE FACILITY

WINDOW DETAILS I

© COPYRIGHT 2007 ALLIED ENGINEERING, INC.

SHEET NUMBER
A4.30
OF

Filename:- Date:- Division:- Username:-
J:\PROJECTS\3700-Trenton\CAD\A\Sheet\A4.30.dwg Aug 04, 2009 - 12:35pm

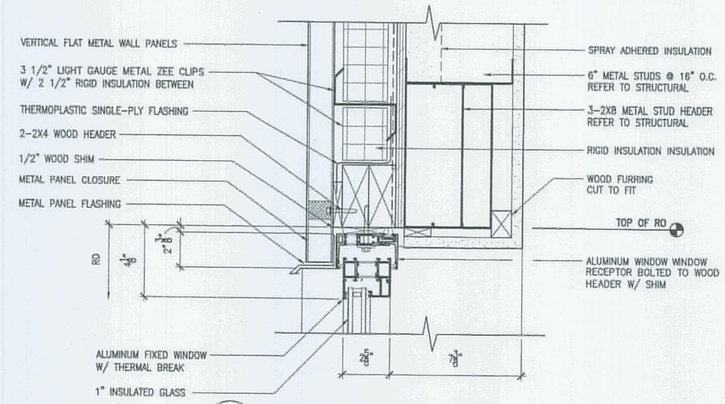


WH3 HEADER DETAIL @ 2ND FLR TOILETS
3"=1'-0"

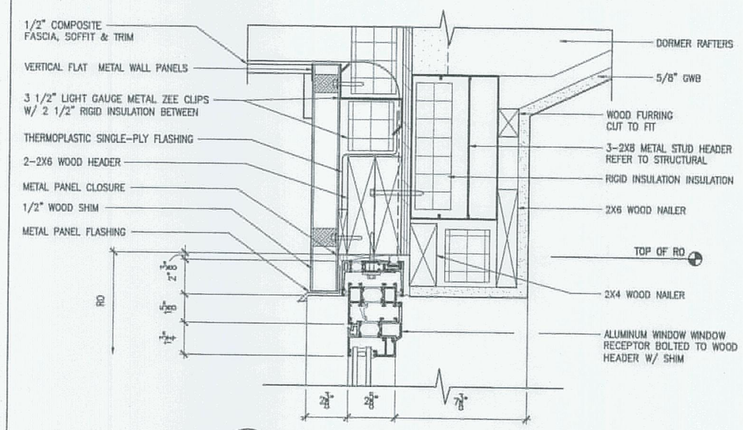


WH4 HEADER DETAIL @ DORMERS
3"=1'-0"

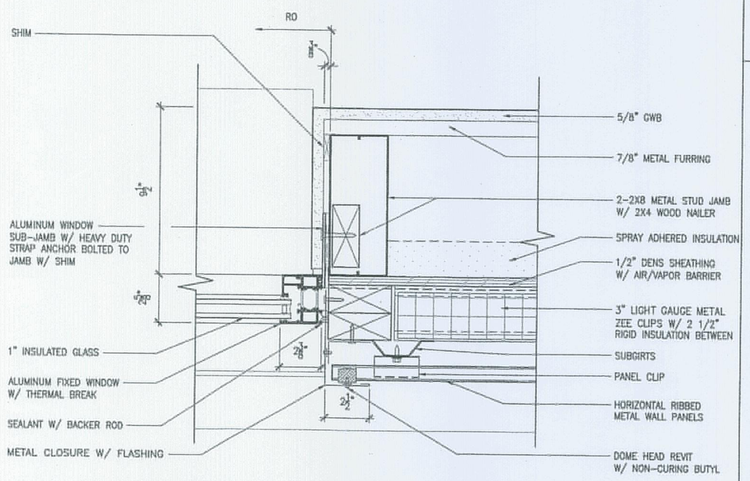


WJ4 JAMB DETAIL @ MAINT. OFFICE
3"=1'-0"

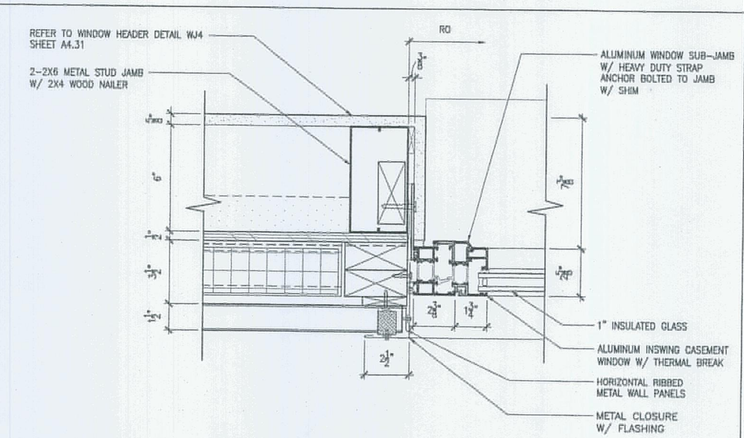


WJ5 JAMB DETAIL @ 2ND FLR TOILETS
3"=1'-0"

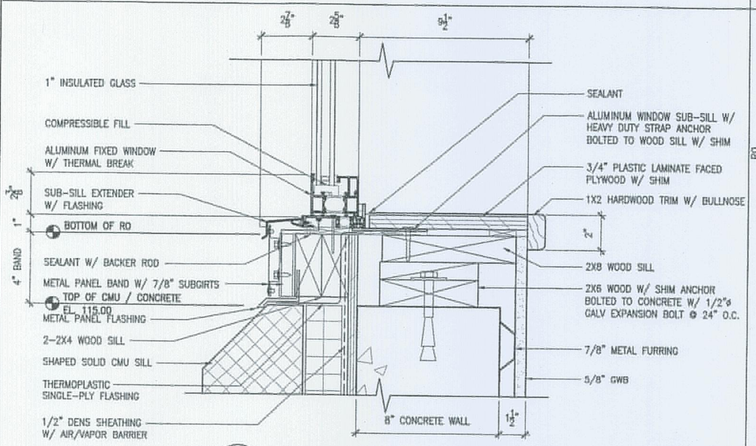


WS4 SILL DETAIL @ MAINT. OFFICE
3"=1'-0"

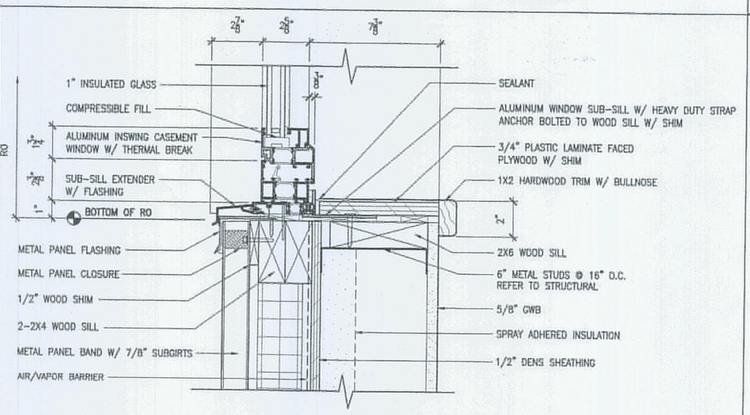


WS5 SILL DETAIL @ 2ND FLR TOILETS
3"=1'-0"

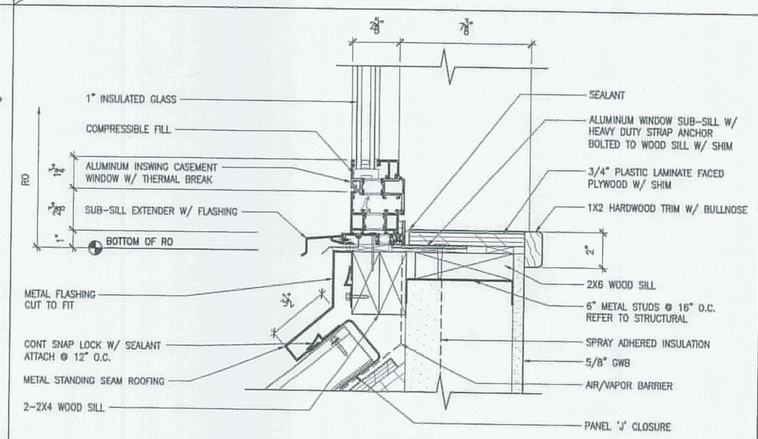


WS6 SILL DETAIL @ DORMERS
3"=1'-0"

NOTE: REFER TO WINDOW ELEVATIONS AND WINDOW SCHEDULE SHEETS FOR FRAME SIZE.


AECOM USA, Inc.
66 Long Wharf
Boston, MA
T 617.723.1700 F 617.723.6856

AECOM
www.aecom.com

Allied Engineering
160 Veranda Street
Portland, Maine 04103
T: 207-221-2368
F: 207-221-2366
Web: www.alliedeng.com


Allied Project No: 07010
Cad File: A4.31.dwg

STATE OF MAINE
DEPARTMENT OF TRANSPORTATION

| DATE | |
|---|---|
| FED PIN NO: | |
| PIN NO: 16123.50 | |

LICENSED ARCHITECT TERRY P. ROOKARD No. 3360 STATE OF MAINE

| PROJECT INFORMATION | | |
|---|---|---|
| PROGRAM | - | |
| PROJECT MANAGER | WFF | SIGNATURE TERRY P. ROOKARD |
| DESIGNER | TV | ARCH. LIN. NUMBER 3360 |
| CONSULTANT | ALLIE ENGINEERING | |
| PROJECT RESIDENT | - | DATE MAY 1, 2009 |
| CONTRACTOR | - | |
| PROJECT COMPLETION DATE | - | |

MAINE DEPARTMENT OF TRANSPORTATION
ACADIA GATEWAY FACILITY
BUS MAINTENANCE FACILITY

WINDOW DETAILS II

©COPYRIGHT 2007 ALLIED ENGINEERING, INC.

SHEET NUMBER
A4.31
OF

Filename: - Date: - Division: - Username: -
J:\PROJECTS\3700-Trenton\CAD\A\Sheet\A4.31.dwg Aug 04, 2009 - 12:39pm

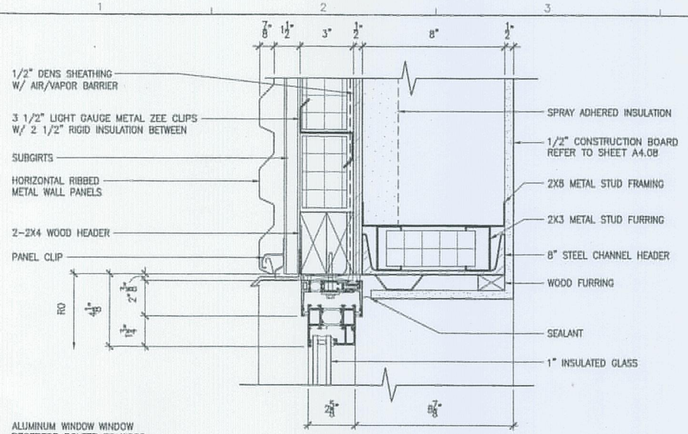


WH5 HEADER DETAIL @ BUS STORAGE
3"=1'-0"

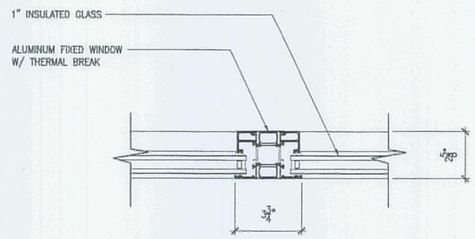


WM1 HORIZONTAL MULLION W/ FIXED GLAZING DETAIL
3"=1'-0"

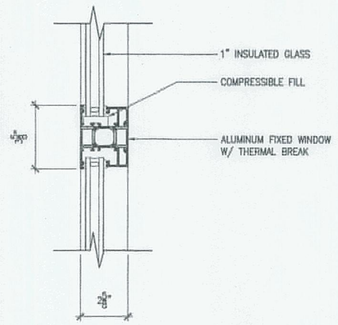


WM2 VERTICAL MULLION W/ FIXED GLAZING DETAIL
3"=1'-0"

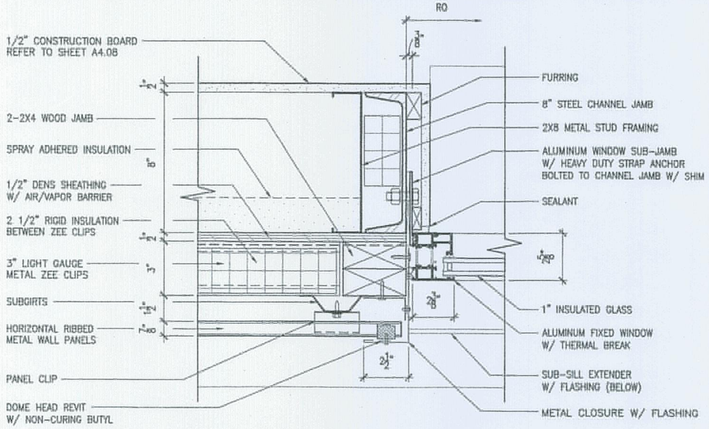


WJ6 JAMB DETAIL @ BUS STORAGE
3"=1'-0"

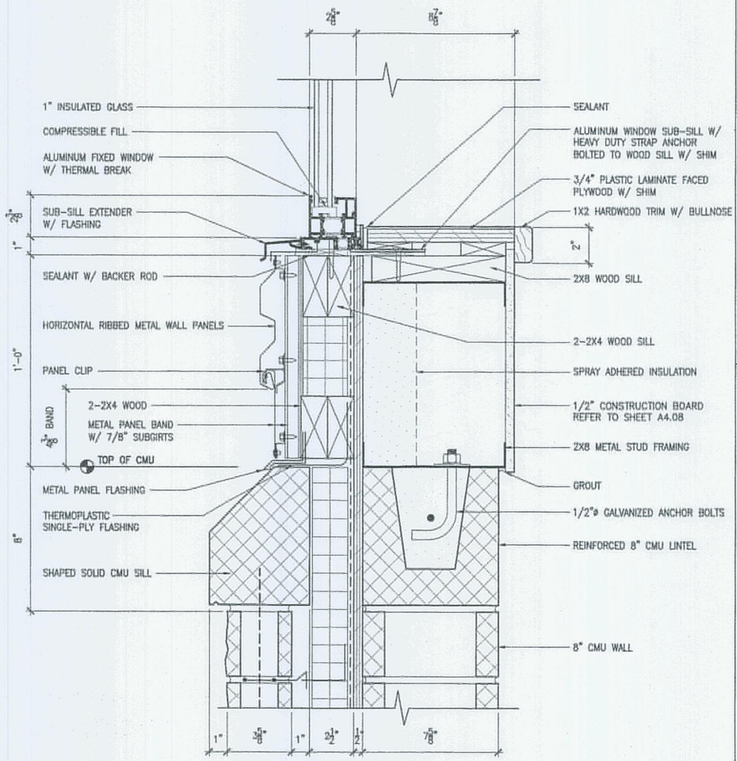


WS7 SILL DETAIL @ BUS STORAGE
3"=1'-0"

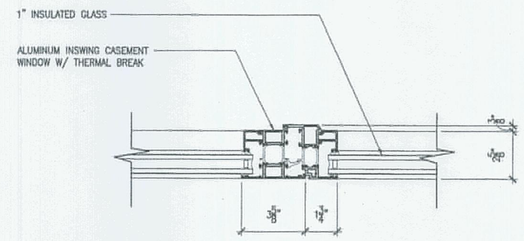


WM3 HORIZONTAL MULLION DETAIL AT INSWING
3"=1'-0"

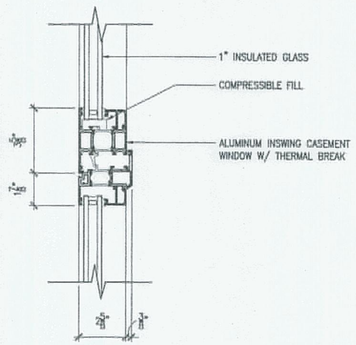


WM4 VERTICAL MULLION DETAIL AT INSWING
3"=1'-0"

NOTE: REFER TO WINDOW ELEVATIONS AND WINDOW SCHEDULE SHEETS FOR FRAME SIZE.


AECOM USA, Inc.
66 Long Wharf
Boston, MA
T 617.723.1700 F 617.723.6858

AECOM
www.aecom.com

Allied Engineering
Reserved Architect Allied Consultants
160 Veranda Street
Portland, Maine 04103
T: 207.221.2360
F: 207.221.2366
Web: www.allied-eng.com


Allied Project No: 07010 | Cad File: A4.32.dwg

STATE OF MAINE
DEPARTMENT OF TRANSPORTATION

| | DATE |
|---|---|
| FED PIN NO: | |
| PIN NO: 16123.50 | |

LICENSED ARCHITECT TERRY P. ROOKARD No. 3360 STATE OF MAINE

| | |
|---|---|
| SIGNATURE | |
| TERRY P. ROOKARD | |
| ARCH. LIN. NUMBER | 3360 |
| DATE | MAY 1, 2009 |

| PROJECT INFORMATION | |
|---|---|
| PROGRAM | - |
| PROJECT MANAGER | WFP |
| DESIGNER | TV |
| CONSULTANT | ALLIED ENGINEERING |
| PROJECT RESIDENT | - |
| CONTRACTOR | - |
| PROJECT COMPLETION DATE | - |

MAINE DEPARTMENT OF TRANSPORTATION
ACADIA GATEWAY FACILITY
BUS MAINTENANCE FACILITY

WINDOW DETAILS III

© COPYRIGHT 2009 ALLIED ENGINEERING, INC.

SHEET NUMBER
A4.32
OF

Filename: - Date: - Division: - Username: -

J:\PROJECTS\3700-Trenton\CAD\A\Sheet\A4.32.dwg Aug 04, 2009 - 12:39pm

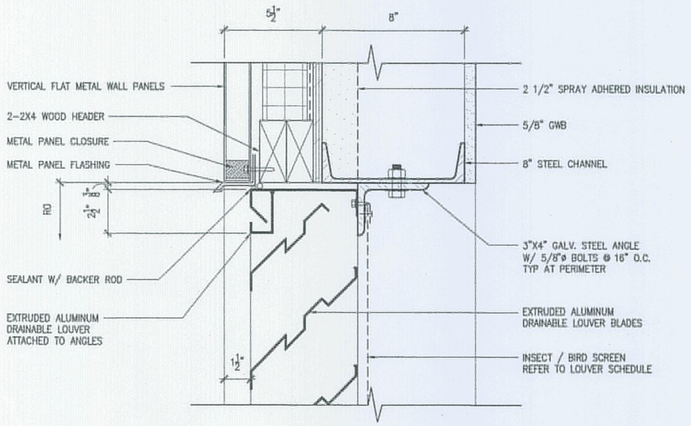


LH1 LOUVER HEADER DETAIL
3"=1'-0"

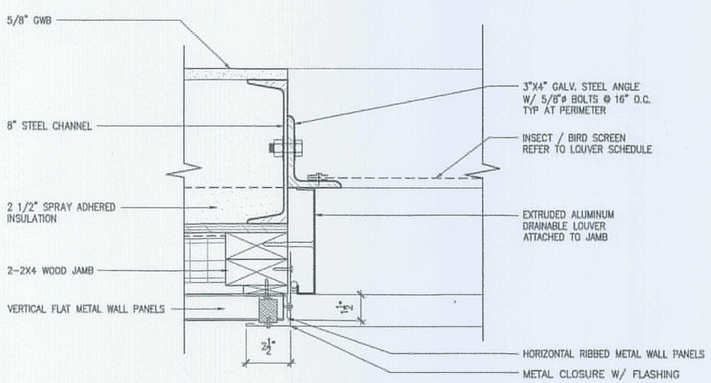


LJ1 LOUVER JAMB DETAIL
3"=1'-0"

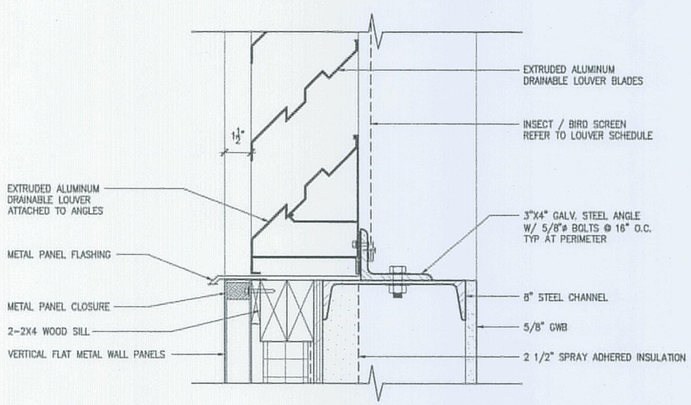


LS1 LOUVER SILL DETAIL
3"=1'-0"

STATE OF MAINE
DEPARTMENT OF TRANSPORTATION

| | DATE |
|---|---|
| | |
| FED PIN NO: | |
| PIN NO: 16123.50 | |

LICENSED ARCHITECT TERRY P. ROOKARD No. 3360 STATE OF MAINE

| PROJECT INFORMATION | | |
|---|---|---|
| PROGRAM | – | |
| PROJECT MANAGER | WPF | SIGNATURE TERRY P. ROOKARD |
| DESIGNER | TV | ARCH. LIN. NUMBER 3360 |
| CONSULTANT | ALLIED ENGINEERING | |
| PROJECT RESIDENT | – | |
| CONTRACTOR | – | DATE MAY 1, 2009 |
| PROJECT COMPLETION DATE | – | |

MAINE DEPARTMENT OF TRANSPORTATION
ACADIA GATEWAY FACILITY
BUS MAINTENANCE FACILITY

LOUVER DETAILS I

© COPYRIGHT 2007 ALLIED ENGINEERING, INC.

SHEET NUMBER
A4.33
OF

TRANSPORTATION
AECOM USA, Inc.
68 Long Wharf
Boston, MA
T 617.723.1700 F 617.723.6856

AECOM
www.aecom.com

Allied Engineering
160 Veranda Street
Portland, Maine 04103
T: 207.221.1366
F: 207.221.1366
Web: www.allied-eng.com

Allied Project No: 07010
Cad File: A4.33.dwg

Filename:- Division:- Date:- Username:-
J:\PROJECTS\3700-Trenton\CAD\A\Sheet\A4.33.dwg Aug 04, 2009 - 12:39pm

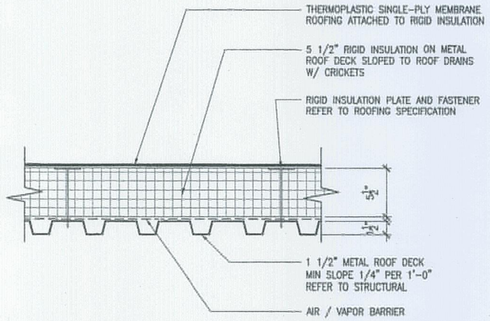


1 THERMOPLASTIC ROOFING COMPONENTS

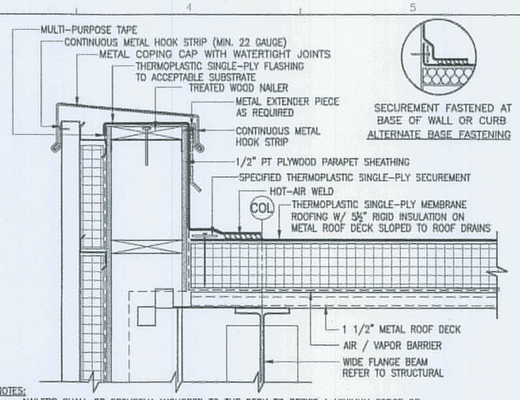


NOTES:
1. NAILERS SHALL BE SECURELY ANCHORED TO THE DECK TO RESIST A MINIMUM FORCE OF 300 POUNDS PER LINEAR FOOT. REFER TO MANUFACTURER'S REQUIREMENTS.
2. METAL EXTENDER PIECE IS REQUIRED IF EXISTING COUNTERFLASHING IS CONTAMINATED AND OR COUNTERFLASHING FASCIA IS LESS THAN 4-INCHES WIDE.
3. VAPOR BARRIER SHALL BE SEALED AT EDGES.

2 PARAPET WALL WITH METAL COPING CAP

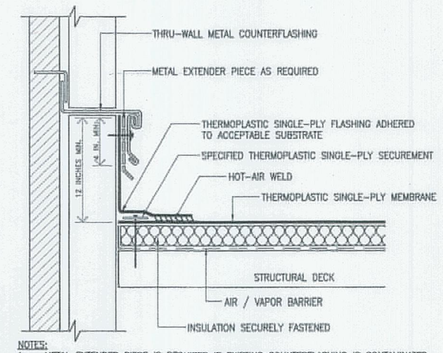


NOTES:
1. METAL EXTENDER PIECE IS REQUIRED IF EXISTING COUNTERFLASHING IS CONTAMINATED AND OR COUNTERFLASHING FASCIA IS LESS THAN 4-INCHES WIDE.
2. METAL COUNTERFLASHING IS TO BE INSTALLED TO MEET LOCAL CODES AND REQUIREMENTS.
3. VAPOR BARRIER SHALL BE SEALED AT EDGES.

3 THRU-WALL COUNTERFLASHING

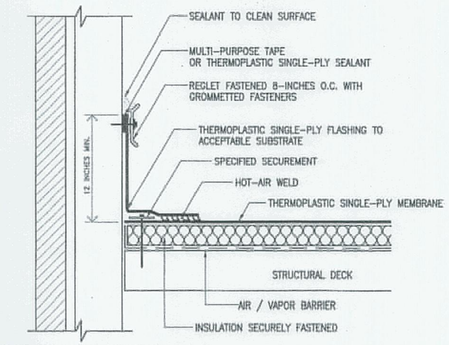


NOTES:
1. SEALANT IS A TWO STEP APPLICATION:
   A) BEHIND TOP OF THERMOPLASTIC SINGLE-PLY FLASHING.
   B) TOP OF REGLET.
2. SEALANT SHALL BE APPLIED TO CLEAN ACCEPTABLE SURFACES.
3. SEALANT IS A MAINTENANCE ITEM. MAINTENANCE IS NOT COVERED UNDER THE THERMOPLASTIC SINGLE-PLY WARRANTY.
4. REGLET SHALL BE SECURELY ANCHORED WITH GROMMETTED FASTENERS AND PROVIDE ADEQUATE COMPRESSION OF MEMBRANE FLASHING AND SEALANT.
5. VAPOR BARRIER SHALL BE SEALED AT EDGES.

4 REGLET TERMINATION

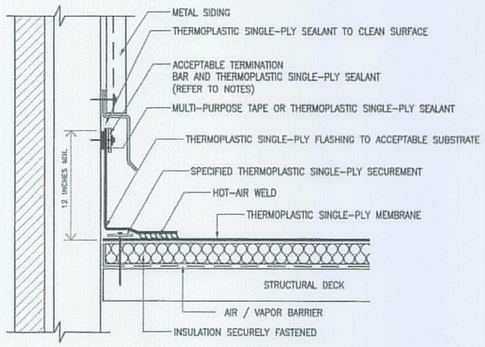


NOTES:
1. SEALANT IS A TWO STEP APPLICATION:
   A) BEHIND TOP OF THERMOPLASTIC SINGLE-PLY FLASHING.
   B) TOP OF REGLET.
2. SEALANT SHALL BE APPLIED TO CLEAN ACCEPTABLE SURFACES.
3. SEALANT IS A MAINTENANCE ITEM. MAINTENANCE IS NOT COVERED UNDER THE THERMOPLASTIC SINGLE-PLY WARRANTY.
4. REGLET SHALL BE SECURELY ANCHORED WITH GROMMETTED FASTENERS AND PROVIDE ADEQUATE COMPRESSION OF MEMBRANE FLASHING AND SEALANT.
5. VAPOR BARRIER SHALL BE SEALED AT EDGES.

5 FLASHING AT SIDING

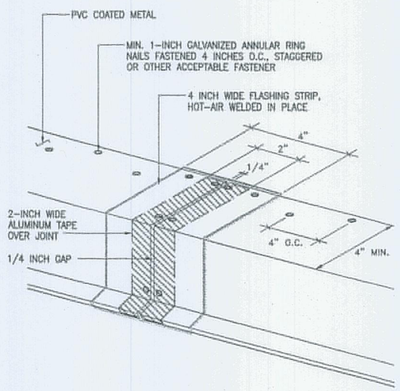


6 FLASHING AT METAL JOINTS

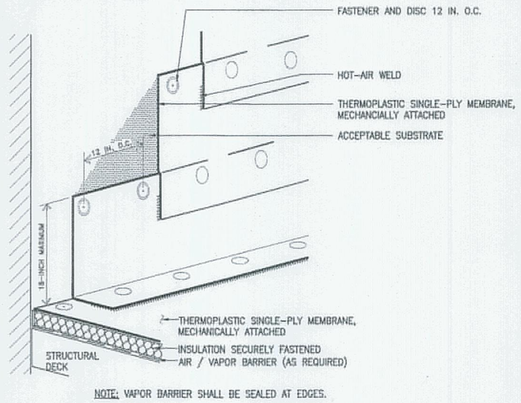


NOTE: VAPOR BARRIER SHALL BE SEALED AT EDGES.

7 ADHERED WALL FLASHING

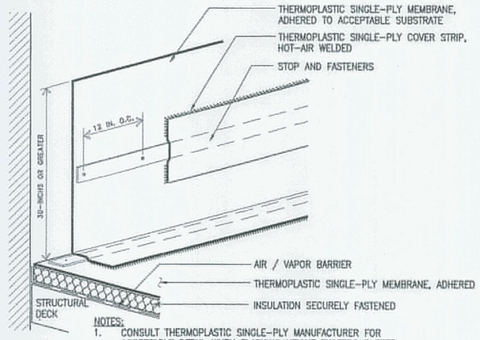


NOTES:
1. CONSULT THERMOPLASTIC SINGLE-PLY MANUFACTURER FOR ACCEPTABLE DETAIL WHEN FLASHING HEIGHT EXCEEDS 5 FEET.
2. VAPOR BARRIER SHALL BE SEALED AT EDGES.

8 ADHERED WALL FLASHING
(FOR WALL FLASHINGS GREATER THAN 30 INCHES IN HEIGHT)

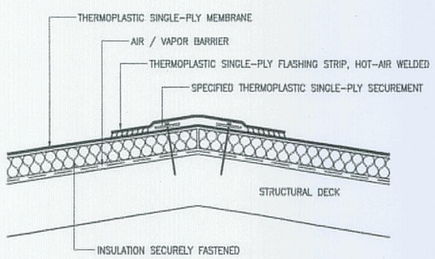


NOTES:
1. WOOD NAILER TO MATCH HEIGHT OF INSULATION MAY BE REQUIRED AT PEAK IF INSULATION THICKNESS EXCEEDS 2 INCHES.
2. OPTION DETAIL USING FASTENERS AND DISC SPACING MAY VARY. CONSULT THERMOPLASTIC SINGLE-PLY MANUFACTURER'S REQUIREMENTS.

9 PEAK/RIDGE

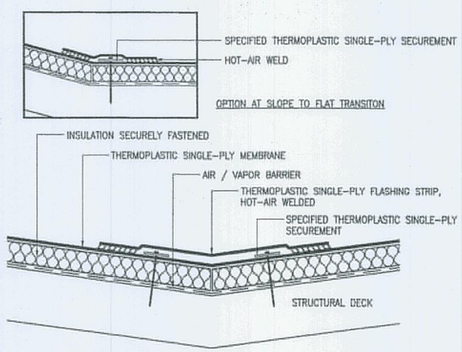


NOTES:
1. WOOD NAILER TO MATCH HEIGHT OF INSULATION MAY BE REQUIRED AT VALLEY IF INSULATION THICKNESS EXCEEDS 2 INCHES.
2. OPTION DETAIL USING FASTENERS AND DISC SPACING MAY VARY. CONSULT THERMOPLASTIC SINGLE-PLY MANUFACTURER'S REQUIREMENTS.
3. VAPOR BARRIER SHALL BE SEALED AT EDGES.

10 SLOPE TRANSITION

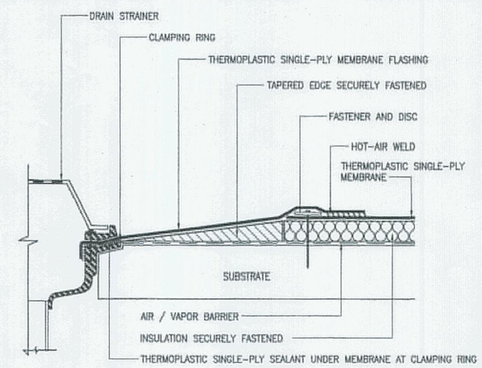


NOTES:
1. EXISTING DRAIN BOWL, CLAMPING RING AND DRAIN ACCESSORIES ARE TO BE CLEANED FREE OF ALL CONTAMINATES.
2. VAPOR BARRIER SHALL BE SEALED AT EDGES.

11 CLAMPING RING DRAIN
PLUMBING CONTRACTOR TO BUY AND INSTALL ALL ROOF DRAINS

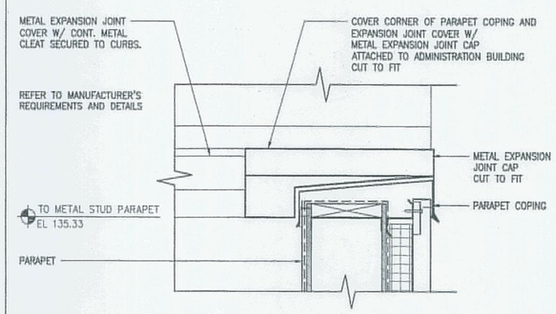


12 EXPANSION JOINT AT PARAPET
(LOCATED AT COLUMN LINE BF)

STATE OF MAINE
DEPARTMENT OF TRANSPORTATION

| | DATE |
|---|---|
| FED PIN NO: | |
| PIN NO: 16123.50 | |

LICENSED ARCHITECT TERRY P. ROOKARD No. 3360 STATE OF MAINE

| | | |
|---|---|---|
| SIGNATURE | TERRY P. ROOKARD | |
| ARCH. LIN. NUMBER | 3360 | |
| DATE | MAY 1, 2009 | |

PROJECT INFORMATION

| | | |
|---|---|---|
| PROGRAM | - | |
| PROJECT MANAGER | WFP | |
| DESIGNER | TV | |
| CONSULTANT | ALLIED ENGINEERING | |
| PROJECT RESIDENT | - | |
| CONTRACTOR | - | |
| PROJECT COMPLETION DATE | - | |

MAINE DEPARTMENT OF TRANSPORTATION
ACADIA GATEWAY FACILITY
BUS MAINTENANCE FACILITY

THERMOPLASTIC ROOF DETAILS I

© COPYRIGHT 2007 ALLIED ENGINEERING, INC.

SHEET NUMBER
A4.40
OF

AECOM USA, Inc.
66 Long Wharf
Boston, MA
T 617.723.1700 F 617.723.6856

AECOM
www.aecom.com

Allied Engineering
160 Veranda Street
Portland, Maine 04103
T: 207.221.1028
F: 207.221.1256
Web: www.allied-eng.com

Allied Project No: 07010
Cad File: A4.40.dwg

Filename:- Date:- Division:- Username:-
J:\PROJECTS\3700-Trenton\CADD\A\Sheet\A4.40.dwg Aug 04, 2009 - 12:30pm

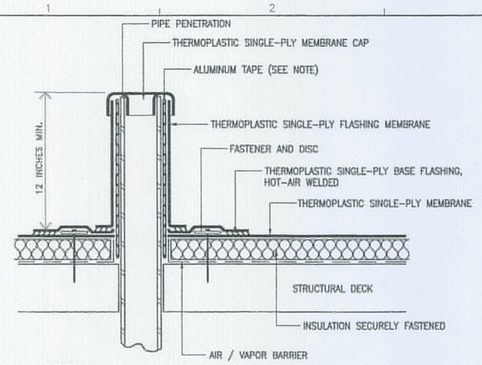


NOTES:
1. ALUMINUM TAPE IS REQUIRED IF EXISTING PENETRATION IS CONTAMINATED.
2. VAPOR BARRIER SHALL BE SEALED AT EDGES.

## 13 VENT STACK FLASHING

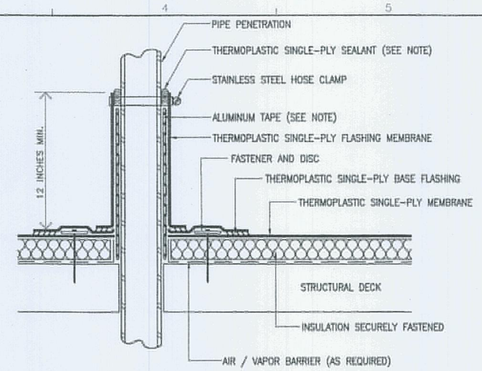


NOTES:
1. ALUMINUM TAPE IS REQUIRED IF EXISTING PENETRATION IS CONTAMINATED.
2. SEALANT IS A MAINTENANCE ITEM, MAINTENANCE IS NOT COVERED UNDER THE THERMOPLASTIC SINGLE-PLY WARRANTY.
3. VAPOR BARRIER SHALL BE SEALED AT EDGES.

## 14 PIPE PENETRATION FLASHING

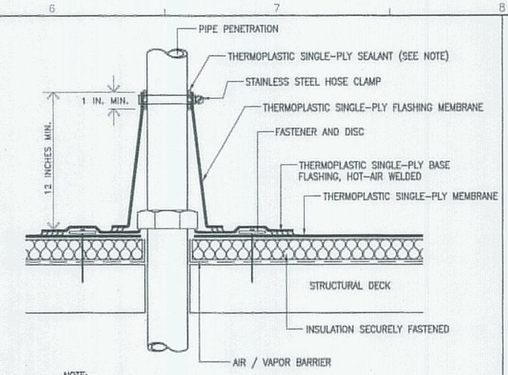


NOTE:
1. SEALANT IS A MAINTENANCE ITEM. MAINTENANCE IS NOT COVERED UNDER THERMOPLASTIC SINGLE-PLY WARRANTY.
2. VAPOR BARRIER SHALL BE SEALED AT EDGES.

## 15 CONE FLASHING AT PENETRATION

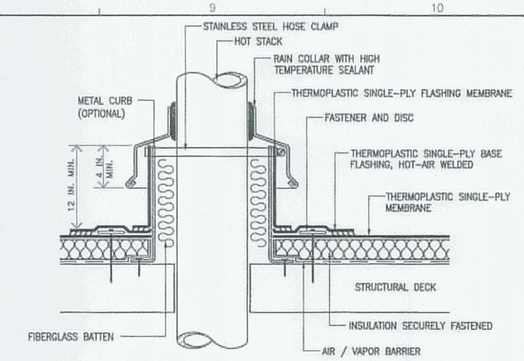


NOTES:
1. THERMOPLASTIC SINGLE-PLY MEMBRANE SHALL NOT BE IN CONTACT WITH SURFACES HAVING SUSTAINED TEMPERATURES ABOVE 160°F.
2. VAPOR BARRIER SHALL BE SEALED AT EDGES.

## 16 HEATED STACK FLASHING

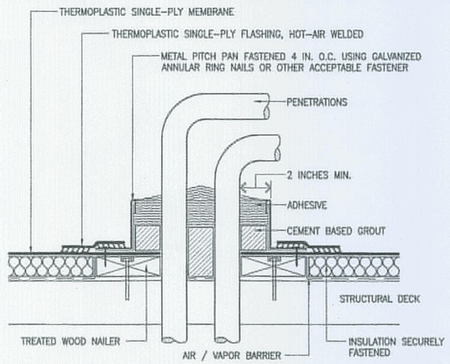


NOTES:
1. USE PIPE CHASE HOUSING AT ALL PENETRATIONS W/ DETAIL 22 – NON-REMOVABLE CURB FLASHING.
2. PITCH POCKETS ARE TO BE ELIMINATED WHERE POSSIBLE.
3. SEALANT IS A MAINTENANCE ITEM. MAINTENANCE IS NOT COVERED UNDER THE THERMOPLASTIC SINGLE-PLY WARRANTY.
4. VAPOR BARRIER SHALL BE SEALED AT EDGES.

## 17 PITCH POCKET

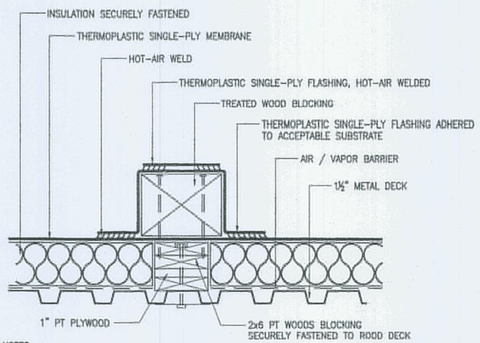


NOTES:
1. WEIGHT OF UNIT TO BE EVENLY DISTRIBUTED OVER CROSS-SECTIONAL AREA OF EXPOSED WOOD NAILER.
2. IF WEIGHT OF UNIT EXCEEDS MAXIMUM ALLOWED BY INSULATION MANUFACTURER A TREATED WOOD NAILER BELOW THE THERMOPLASTIC SINGLE-PLY MEMBRANE IS REQUIRED.
3. VAPOR BARRIER SHALL BE SEALED AT EDGES.

## 18 PROTECTED WOOD SLEEPER

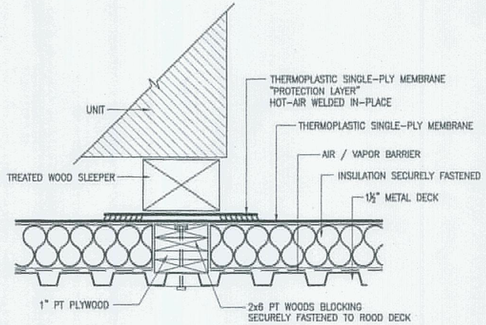


NOTES:
1. WEIGHT OF UNIT TO BE EVENLY DISTRIBUTED OVER CROSS-SECTIONAL AREA OF EXPOSED WOOD NAILER.
2. IF WEIGHT OF UNIT EXCEEDS MAXIMUM ALLOWED BY INSULATION MANUFACTURER, A TREATED WOOD NAILER BELOW THE THERMOPLASTIC SINGLE-PLY MEMBRANE IS REQUIRED.
3. VAPOR BARRIER SHALL BE SEALED AT EDGES.

## 19 EXPOSED WOOD SLEEPER

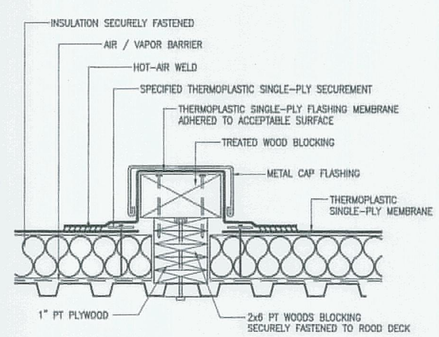


NOTES:
1. NAILERS SHALL BE SECURELY ANCHORED TO THE DECK TO RESIST A FORCE OF 300 POUNDS PER LINEAL FOOT IN ANY DIRECTION.
2. VAPOR BARRIER SHALL BE SEALED AT EDGES.

## 20 EQUIPMENT SUPPORT

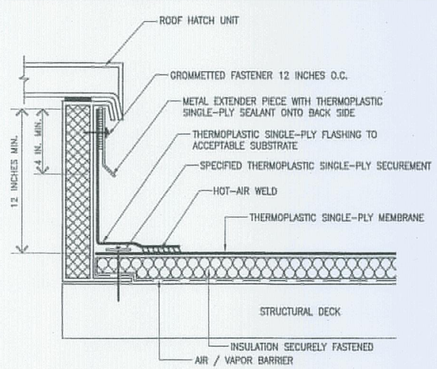


NOTES:
1. METAL EXTENDER PIECE IS REQUIRED IF EXISTING COUNTERFLASHING IS CONTAMINATED AND OR COUNTERFLASHING FASCIA IS LESS THAN 4 INCHES WIDE. FASTENED 12 INCHES O.C. WITH GROMMETTED FASTENER.
2. VAPOR BARRIER SHALL BE SEALED AT EDGES.

## 21 ROOF HATCH FLASHING

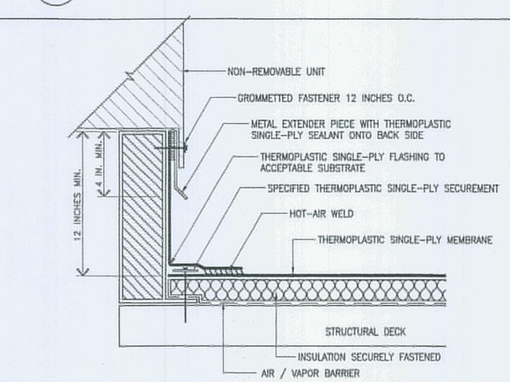


NOTES:
1. METAL EXTENDER PIECE IS REQUIRED IF EXISTING COUNTERFLASHING IS CONTAMINATED AND OR COUNTERFLASHING FASCIA IS LESS THAN 4 INCHES WIDE. FASTENED 12 INCHES O.C. WITH GROMMETTED FASTENER.
2. VAPOR BARRIER SHALL BE SEALED AT EDGES.

## 22 NON-REMOVABLE CURB FLASHING

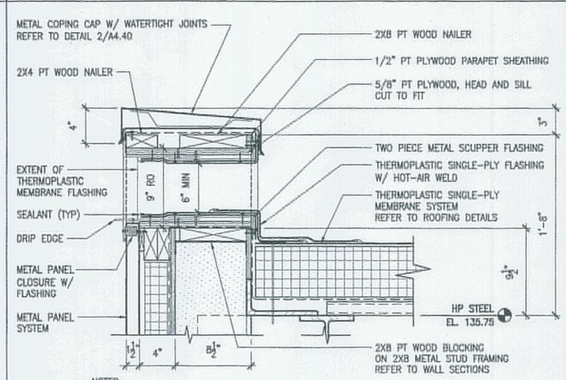


NOTES:
1. NAILERS SHALL BE SECURELY ANCHORED TO THE DECK TO RESIST A FORCE OF 300 POUNDS PER LINEAL FOOT IN ANY DIRECTION.
2. SEALANT IS A MAINTENANCE ITEM.
3. VAPOR BARRIER SHALL BE SEALED AT EDGES.

## 23 THRU-WALL SCUPPER

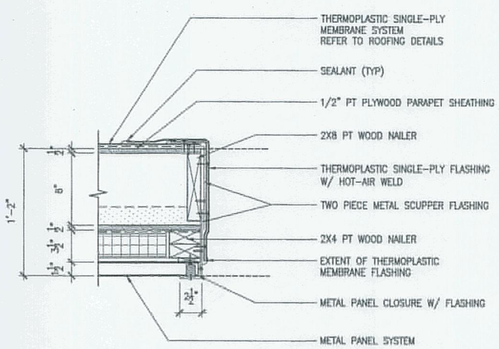


## 24 THRU-WALL SCUPPER JAMB

STATE OF MAINE
DEPARTMENT OF TRANSPORTATION

| | DATE |
|---|---|
| | |
| FED PIN NO: | |
| PIN NO: 16123.50 | |

LICENSED ARCHITECT TERRY P. ROOKARD No. 3360 STATE OF MAINE

| INFORMATION | |
|---|---|
| SIGNATURE | |
| TERRY P. ROOKARD | |
| ARCH. LIN. NUMBER | WFP |
| 3360 | TV |
| DATE | ALLIED ENGINEERING |
| MAY 1, 2009 | - |
| | - |
| | DATE |

| PROJECT | |
|---|---|
| PROGRAM | - |
| PROJECT MANAGER | WFP |
| DESIGNER | TV |
| CONSULTANT | ALLIED ENGINEERING |
| PROJECT RESIDENT | - |
| CONTRACTOR | - |
| PROJECT COMPLETION DATE | - |

MAINE DEPARTMENT OF TRANSPORTATION
ACADIA GATEWAY FACILITY
BUS MAINTENANCE FACILITY

THERMOPLASTIC ROOF DETAILS II

© COPYRIGHT 2007 ALLIED ENGINEERING, INC.

AECOM USA, Inc.
66 Long Wharf
Boston, MA
T 617.723.1700 F 617.723.6856

AECOM
www.aecom.com

Allied Engineering
Mechanical Electrical Plumbing
160 Veranda Street
Portland, Maine 04103
T: 207.221.3269
F: 207.221.3266
Web: www.alliedengineering.com

Allied Project No: 07010
Cad File: A4.41.dwg

SHEET NUMBER
A4.41
OF

Filename: - Division: - Date: - Username: -
J:\PROJECTS\3700-Trenton\CAD\A\Sheet\A4.41.dwg Aug 04, 2009 - 12:31pm

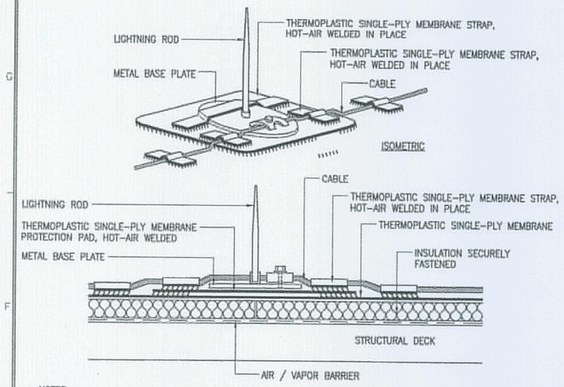


NOTES:
1. EXISTING CABLE SHALL BE CLEANED FREE OF ASPHALT CONTAMINATION AS REQUIRED PRIOR TO REINSTALLATION.
2. IF ASPHALT CONTAMINATION CAN NOT BE CLEANED, THERMOPLASTIC SINGLE-PLY REQUIRES A CONTINUOUS LAYER OF FLASHING UNDER LOCATION OF CABLE. HOT-AIR WELDED IN-PLACE.
3. THERMOPLASTIC SINGLE-PLY IS NOT RESPONSIBLE FOR LIGHTNING DAMAGE TO THERMOPLASTIC SINGLE-PLY ROOF.

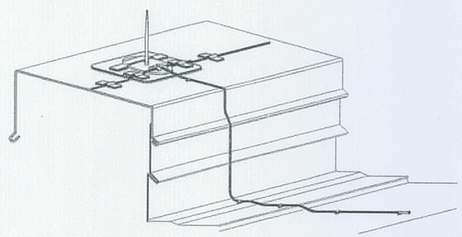

ISOMETRIC DIAGRAM OF LIGHTNING ROD MOUNTED TO TOP OF PARAPET

25 LIGHTNING ROD

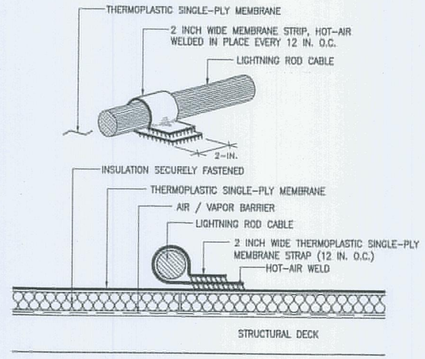


NOTES:
1. EXISTING CABLE SHALL BE CLEANED FREE OF ASPHALT CONTAMINATION AS REQUIRED PRIOR TO REINSTALLATION.
2. IF ASPHALT CONTAMINATION CAN NOT BE CLEANED, THERMOPLASTIC SINGLE-PLY REQUIRES A CONTINUOUS FLASHING STRIP UNDER LOCATION OF CABLE. HOT-AIR WELDED IN-PLACE.
3. THERMOPLASTIC SINGLE-PLY IS NOT RESPONSIBLE FOR LIGHTNING DAMAGE TO THERMOPLASTIC SINGLE-PLY ROOF.
4. VAPOR BARRIER SHALL BE SEALED AT EDGES

26 LIGHTNING ROD CABLE

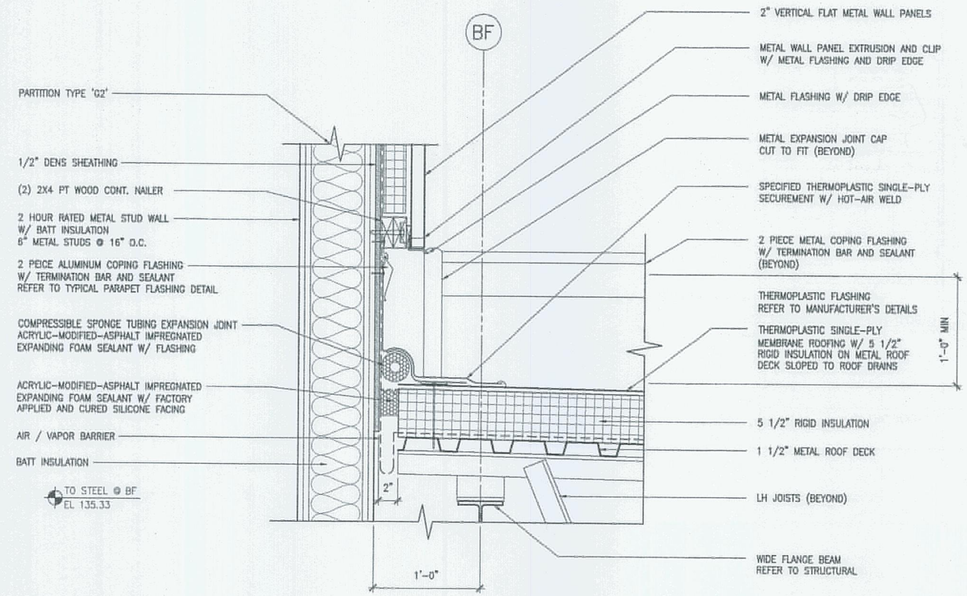


28 ROOF EXPANSION JOINT

STATE OF MAINE
DEPARTMENT OF TRANSPORTATION

| | DATE |
|---|---|
| | |
| FED PIN NO: | |
| PIN NO: 16123.50 | |

LICENSED ARCHITECT TERRY P. ROOKARD No. 3360 STATE OF MAINE

| INFORMATION | |
|---|---|
| PROJECT | – |
| PROGRAM | – |
| PROJECT MANAGER | WPF |
| DESIGNER | TV |
| CONSULTANT | ALLIED ENGINEERING |
| PROJECT RESIDENT | – |
| CONTRACTOR | – |
| PROJECT COMPLETION DATE | – |

SIGNATURE
TERRY P. ROOKARD
ARCH. LIN. NUMBER
3360
DATE MAY 1, 2009

MAINE DEPARTMENT OF TRANSPORTATION
ACADIA GATEWAY FACILITY
BUS MAINTENANCE FACILITY

THERMOPLASTIC
ROOF DETAILS III

© COPYRIGHT 2007 ALLIED ENGINEERING, INC.

AECOM USA, Inc.
66 Long Wharf
Boston, MA
T 617.723.1700 F 617.723.6856

AECOM
www.aecom.com

Allied Engineering
Advanced Technical Solutions
160 Veranda Street
Portland, Maine 04103
T: 207.221.2669
F: 207.221.2386
Web: www.alliedengineering.com

Allied Project No: 07010
Cad File: A4.42.dwg

SHEET NUMBER
A4.42
OF

Filename:- Division:- Date:-
J:\PROJECTS\3700-Trenton\CAD\A\Sheet\A4.42.dwg Aug 04, 2009 - 12:31pm
Username:-

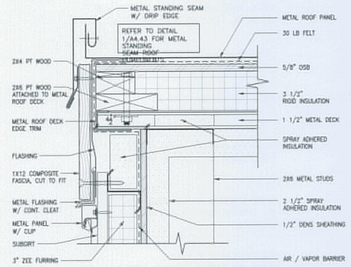


10 GABLED END / DORMER EDGE SIMILAR
3"=1'-0"

| | | | | |
|---|---|---|---|---|
| MaineDOT Maine Department of Transportation 16WAYNON, MAINE | AECOM A E C O M USA OF MASSACHUSETTS, INC. 80 LONG WHARF BOSTON, MASSACHUSETTS 02110 T (617) 723-1750 F (617) 723-0647 | ROOF DETAIL | Allied Engineering 160 Veranda Street Portland, Maine 04103 P: (207) 797-7000 F: (207) 797-7001 Web: www.alliedengineering.com | SCALE: 3" = 1'-0" DRAWN: PR DWG. NO.: SKA-04A DATE: 12/23/10 A4.43 ACADIA GATEWAY FACILITY MAINE DEPARTMENT OF TRANSPORTATION ALLIED PROJECT NO. 07015 |

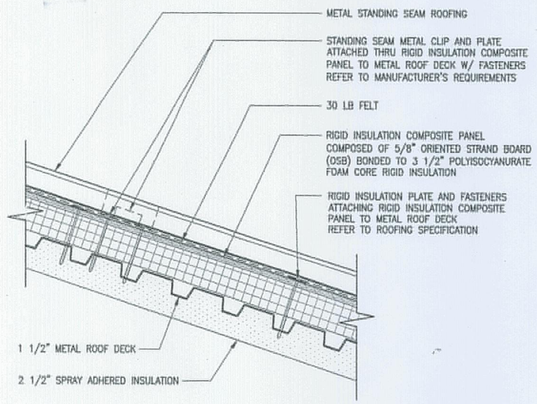


1 METAL STANDING SEAM ROOF COMPONENTS
1 1/2"=1'-0"

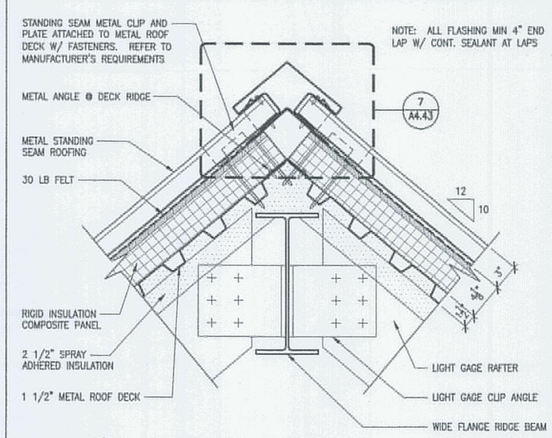


2 STANDING SEAM ROOF RIDGE
1 1/2"=1'-0"

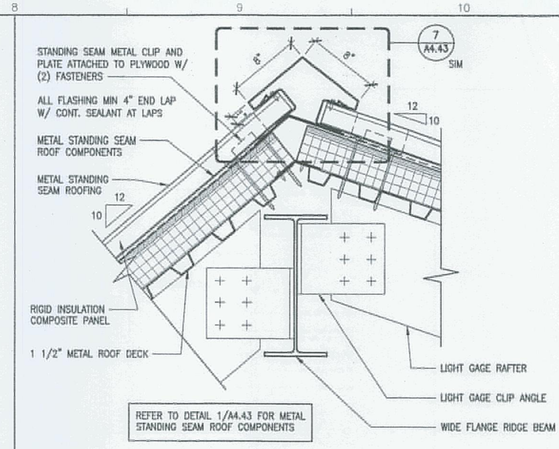


3 RIDGE AT NORTH DORMER
1 1/2"=1'-0"

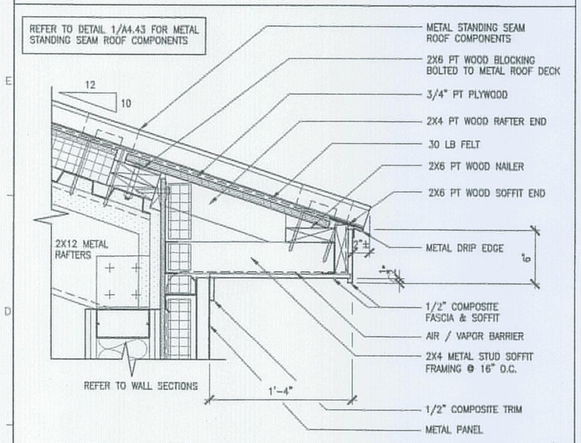


4 STANDING SEAM NORTH DORMER EAVE
1 1/2"=1'-0"

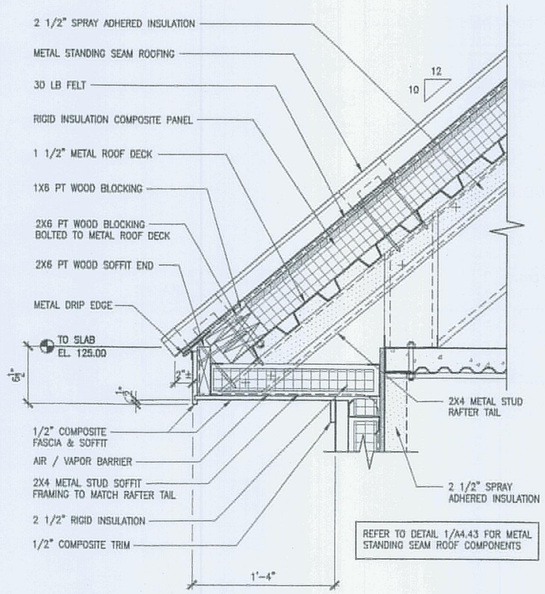


5 STANDING SEAM ROOF EAVE
1 1/2"=1'-0"

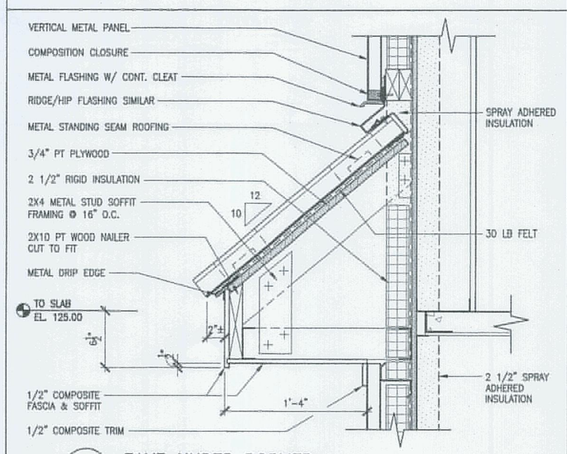


6 EAVE UNDER DORMER
1 1/2"=1'-0"

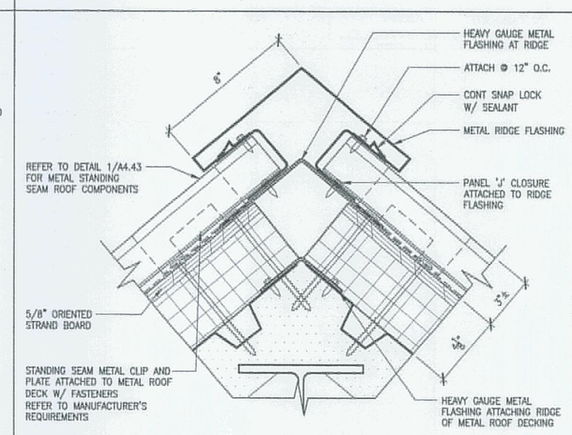


7 RIDGE/HIP FLASHING
3"=1'-0"

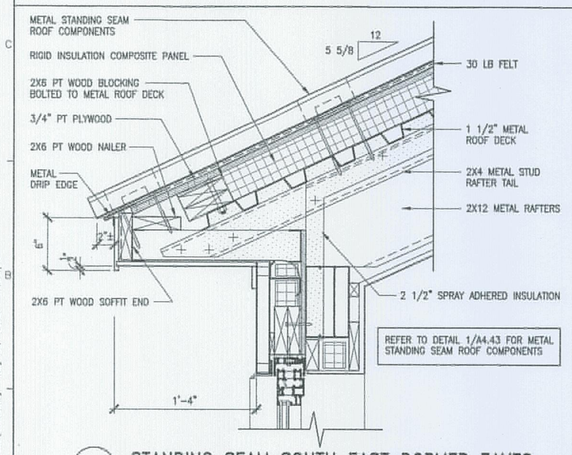


8 STANDING SEAM SOUTH EAST DORMER EAVES

9 NOT USED

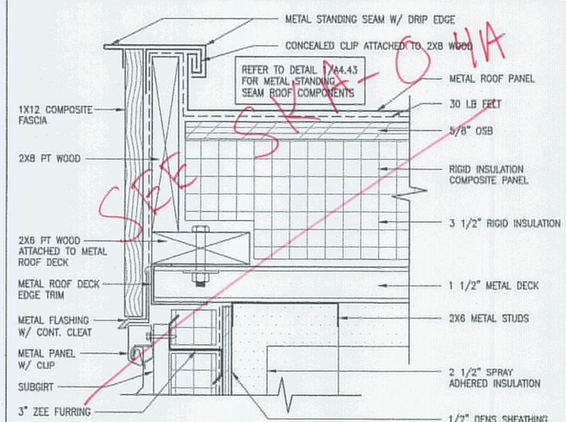


10 GABLED END
3"=1'-0"

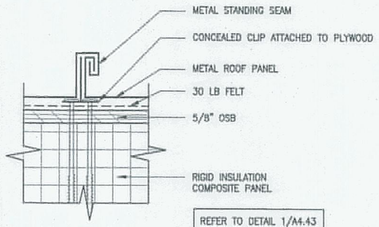


11 METAL STANDING SEAM
3"=1'-0"

STATE OF MAINE
DEPARTMENT OF TRANSPORTATION

| | DATE |
|---|---|
| | |
| FED PIN NO: | |
| PIN NO: 16123.50 | |

LICENSED ARCHITECT TERRY P. ROOKARD No. 3380 STATE OF MAINE

| INFORMATION | | |
|---|---|---|
| SIGNATURE | TERRY P. ROOKARD | |
| ARCH. LIN. NUMBER | 3380 | |
| DATE | MAY 1, 2009 | |

| PROJECT INFORMATION | | |
|---|---|---|
| PROGRAM | - | |
| PROJECT MANAGER | WFF | |
| DESIGNER | TV | |
| CONSULTANT | ALLIED ENGINEERING | |
| PROJECT RESIDENT | - | |
| CONTRACTOR | - | |
| PROJECT COMPLETION DATE | - | |

MAINE DEPARTMENT OF TRANSPORTATION
ACADIA GATEWAY FACILITY
BUS MAINTENANCE FACILITY

METAL STANDING SEAM
ROOF DETAILS I

© COPYRIGHT 2007 ALLIED ENGINEERING, INC.

SHEET NUMBER
A4.43
OF

AECOM USA, Inc.
66 Long Wharf
Boston, MA
T 617.723.1700 F 617.723.6856
AECOM
www.aecom.com

Allied Engineering
Advanced Mechanical Complex Engineering
160 Veranda Street
Portland, Maine 04103
T: 207.221.3298
F: 207.221.3366
Web: www.allied-eng.com

Allied Project No: 07010
Cad File: A4.43.dwg

Filename:- Division:- Date:- Username:-
J:\PROJECTS\3700-Trenton\CADD\A\Sheet\A4.43.dwg Aug 04, 2009 - 12:31pm

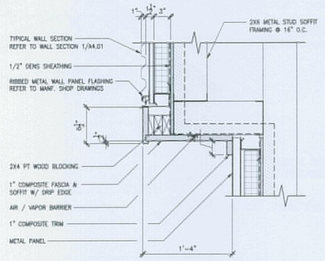


6 GABLED END SOFFIT
1 1/2"=1'-0"

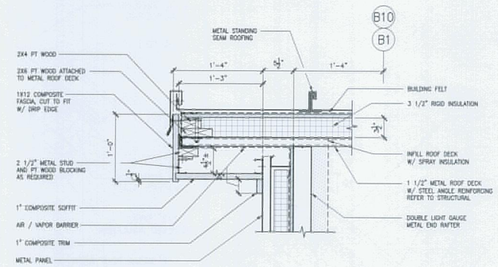


7 GABLED END EAVE
1 1/2"=1'-0"

MaineDOT
Maine Department of Transportation
TRENTON, MAINE

AECOM
AECOM USA OF MASSACHUSETTS, INC.
90 LONG WHARF BOSTON, MASSACHUSETTS 02110
T. (617) 723-1700 F. (617) 742-0647

ROOF DETAIL

Allied Engineering
168 Veranda Street
Portland, Maine 04103
P: (207) 797-7100
F: (207) 797-7101
Web: www.alliedengineering.com

| | |
|---|---|
| SCALE: | 1-1/2" = 1'-0" |
| DESIGNED BY: | PR |
| SHEET: | A4.44 |
| DATE: | 12/23/10 |
| DWG. NO. | SKA-04B |

ACADIA GATEWAY FACILITY
MAINE DEPARTMENT OF TRANSPORTATION
MAINE PROJECT NO. 0010

MaineDOT
Maine Department of Transportation
TRENTON, MAINE

AECOM
AECOM USA OF MASSACHUSETTS, INC.
90 LONG WHARF BOSTON, MASSACHUSETTS 02110
T. (617) 723-1700 F. (617) 742-0647

ROOF DETAIL

Allied Engineering
168 Veranda Street
Portland, Maine 04103
P: (207) 797-7100
F: (207) 797-7101
Web: www.alliedengineering.com

| | |
|---|---|
| SCALE: | 1-1/2" = 1'-0" |
| DESIGNED BY: | PR |
| SHEET: | A4.44 |
| DATE: | 12/23/10 |
| DWG. NO. | SKA-04C |

ACADIA GATEWAY FACILITY
MAINE DEPARTMENT OF TRANSPORTATION
MAINE PROJECT NO. 0010

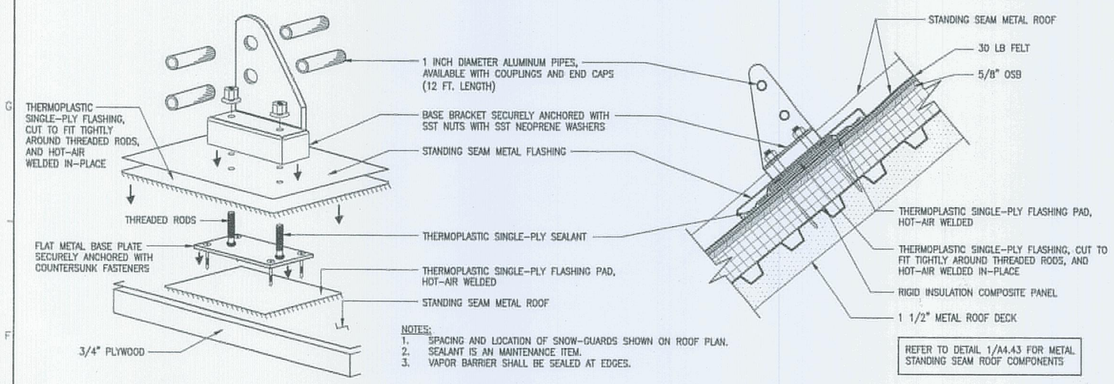


1 SNOWGUARD FLASHING
1 1/2"=1'-0"

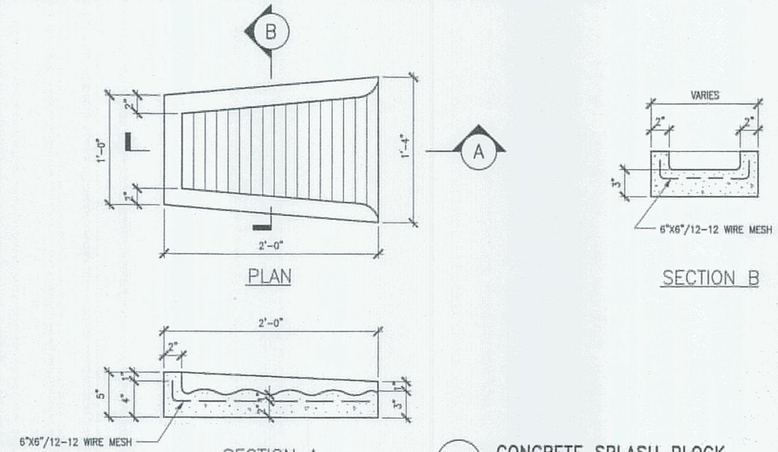


2 CONCRETE SPLASH BLOCK
1 1/2"=1'-0"

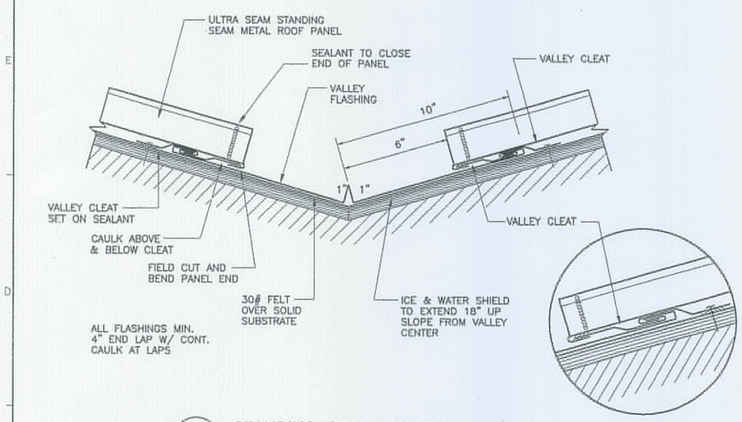


3 STANDING SEAM VALLEY
3"=1'-0"

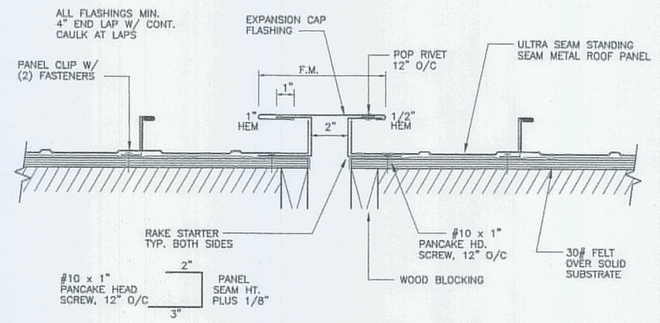


4 STANDING SEAM EXPANSION JOINT
3"=1'-0"

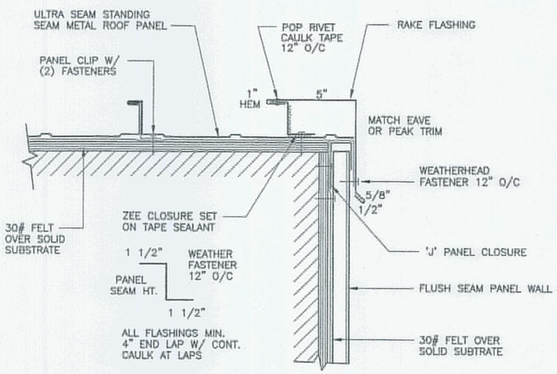


5 RAKE DETAIL @ FLUSH WALL PANEL
3"=1'-0"

SEE SKA-04B

SEE SKA-04C


AECOM USA, Inc.
66 Long Wharf
Boston, MA
T 617.723.1700 F 617.723.6856

AECOM
www.aecom.com

Allied Engineering
160 Veranda Street
Portland, Maine 04103
T: 207.231.3369
F: 207.231.3366
Web: www.alliedengineering.com


Allied Project No: 07010
Cad File: A4.44.dwg

STATE OF MAINE
DEPARTMENT OF TRANSPORTATION

| | DATE |
|---|---|
| | |
| FED PIN NO: | |
| PIN NO: 16123.50 | |

LICENSED ARCHITECT TERRY P. ROOKARD No. 3360 STATE OF MAINE

SIGNATURE
TERRY P. ROOKARD
ARCH. LIN. NUMBER 3360
DATE MAY 1, 2009

PROJECT INFORMATION

| | |
|---|---|
| PROGRAM | - |
| PROJECT MANAGER | WFP |
| DESIGNER | TV |
| CONSULTANT | ALLIED ENGINEERING |
| PROJECT RESIDENT | - |
| CONTRACTOR | - |
| PROJECT COMPLETION DATE | - |

MAINE DEPARTMENT OF TRANSPORTATION
ACADIA GATEWAY FACILITY
BUS MAINTENANCE FACILITY

METAL STANDING SEAM
ROOF DETAILS II

© COPYRIGHT 2007 ALLIED ENGINEERING, INC.

SHEET NUMBER
A4.44
OF

Filename: - Division: - Date:- Username: -

J:\PROJECTS\3700-Trenton\CAD\A\Sheet\A4.44.dwg Aug 04, 2009 - 12:31pm

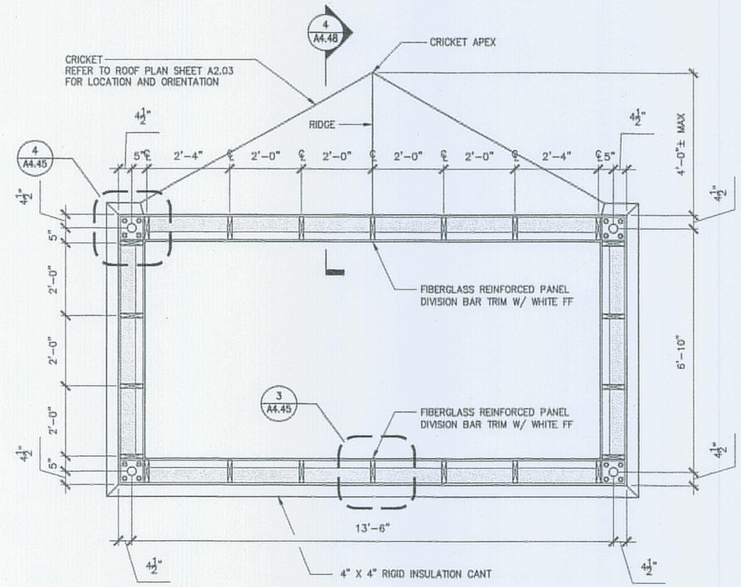


1 SKYLIGHT CURB PLAN
1/2"=1'-0"

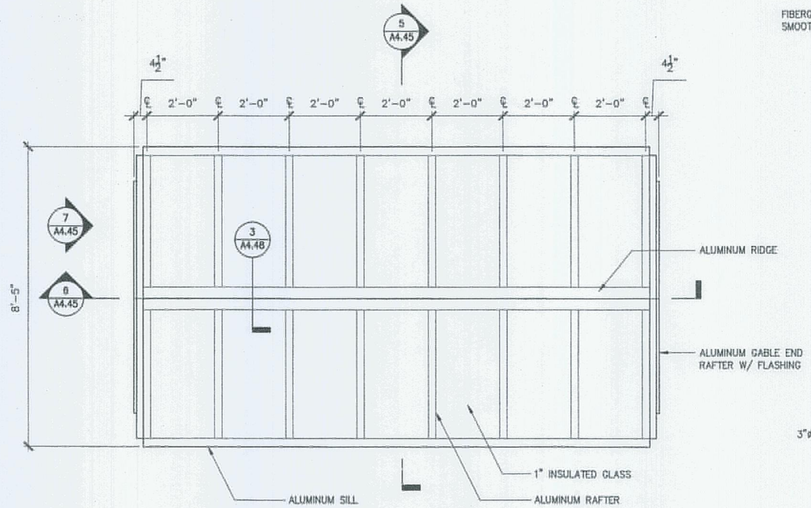


2 SKYLIGHT PLAN
1/2"=1'-0"

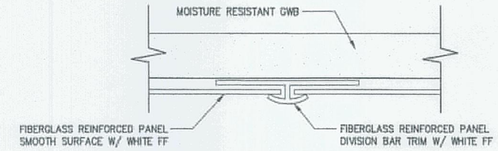


3 DIVISION BAR DETAIL
FULL SIZE

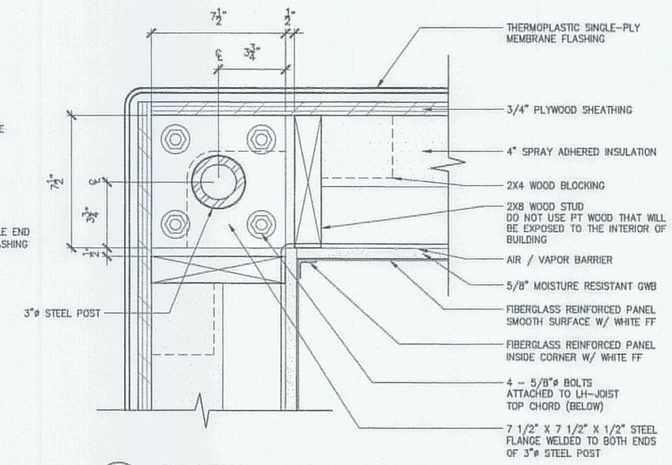


4 PLAN DETAIL @ CURB CORNER
3"=1'-0"

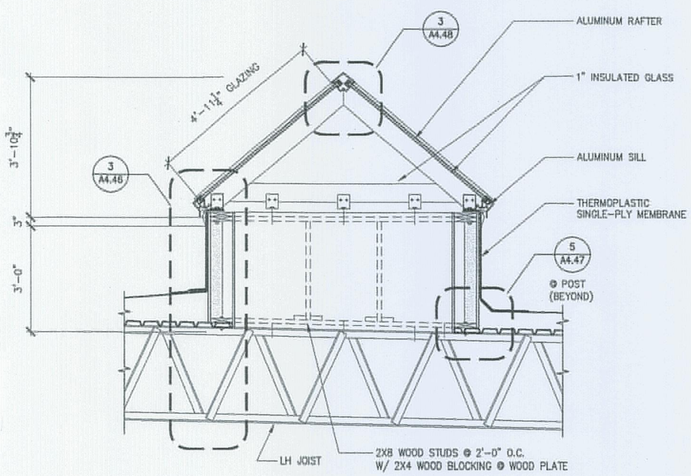


5 SKYLIGHT SECTION
1/2"=1'-0"

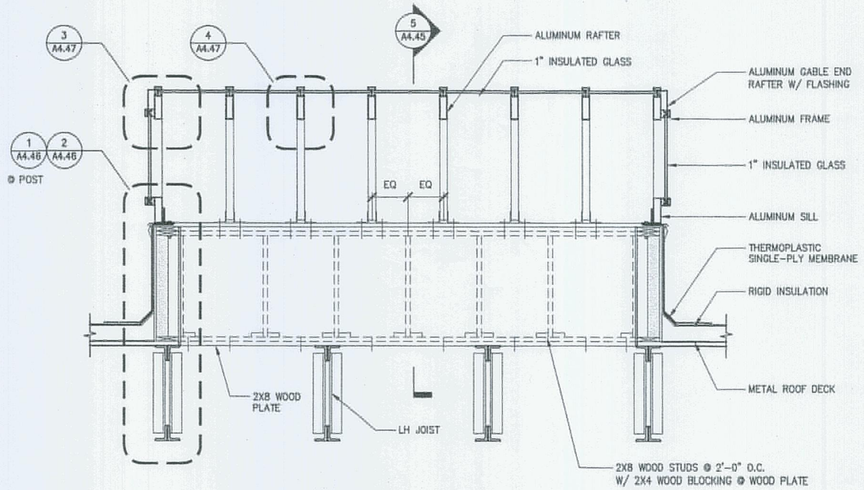


6 SKYLIGHT SECTION
1/2"=1'-0"

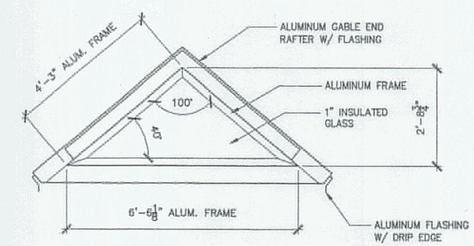


7 SKYLIGHT EXTERIOR ELEVATION
1/2"=1'-0"

SKYLIGHT NOTES:

1. PROVIDE RUBBER GASKET BETWEEN ALL ALUMINUM, STEEL, GALVANIZED STEEL AND STAINLESS STEEL CONNECTIONS WHERE THE METALS MAKE CONTACT WITH DIFFERENT METAL TO PREVENT ELECTROLYSIS.
2. ATTACH WOOD FRAMING TOGETHER WITH CORROSION RESISTANT SCREWS.
3. REFER TO SHOP DRAWINGS FOR ADDITIONAL DIMENSIONS, NOTES AND DETAILS.
4. REFER TO MANUFACTURER'S DETAILS, DIMENSIONS AND REQUIREMENTS.
5. CONTRACTOR TO REMOVE ALL DECALS, LABELS, STICKERS, TAGS AND GLUE RESIN. CLEAN ALL MARKS AND TOUCH UP ALL SCRATCHES TO MATCH EXISTING. ALL INTERIOR AND EXTERIOR FRAMING GLASS AND FIBERGLASS PANEL TO BE CLEANED AFTER INSTALLATION.

COORDINATE W/ STRUCTURAL DRAWINGS

TRANSPORTATION

AECOM USA, Inc.
66 Long Wharf
Boston, MA
T 617.723.1700 F 617.723.6856

AECOM
www.aecom.com

Allied Engineering
American Mechanical Electrical Engineering

160 Veranda Street
Portland, Maine 04103
T: 207-221-3866
F: 207-221-2566
Web: www.allied-eng.com

Allied Project No: 07010
Cad File: A4.45.dwg

STATE OF MAINE
DEPARTMENT OF TRANSPORTATION

| DATE | |
|---|---|
| FED PIN NO: | |
| PIN NO: 16123.50 | |

LICENSED ARCHITECT TERRY P. ROOKARD No. 3360 STATE OF MAINE

| PROJECT INFORMATION | |
|---|---|
| PROGRAM | - |
| PROJECT MANAGER | WFF |
| DESIGNER | TV |
| CONSULTANT | ALLIED ENGINEERING |
| PROJECT RESIDENT | - |
| CONTRACTOR | - |
| PROJECT COMPLETION DATE | - |

SIGNATURE
TERRY P. ROOKARD
ARCH. LIN. NUMBER
3360
DATE MAY 1, 2009

MAINE DEPARTMENT OF TRANSPORTATION
ACADIA GATEWAY FACILITY
BUS MAINTENANCE FACILITY

SKYLIGHT I

© COPYRIGHT 2007 ALLIED ENGINEERING, INC.

SHEET NUMBER
A4.45
OF

Filename:- J:\PROJECTS\3700-Trenton\CAD\A\Sheet\A4.45.dwg Aug 04, 2009 - 12:31pm Date:- Division:- Username:-

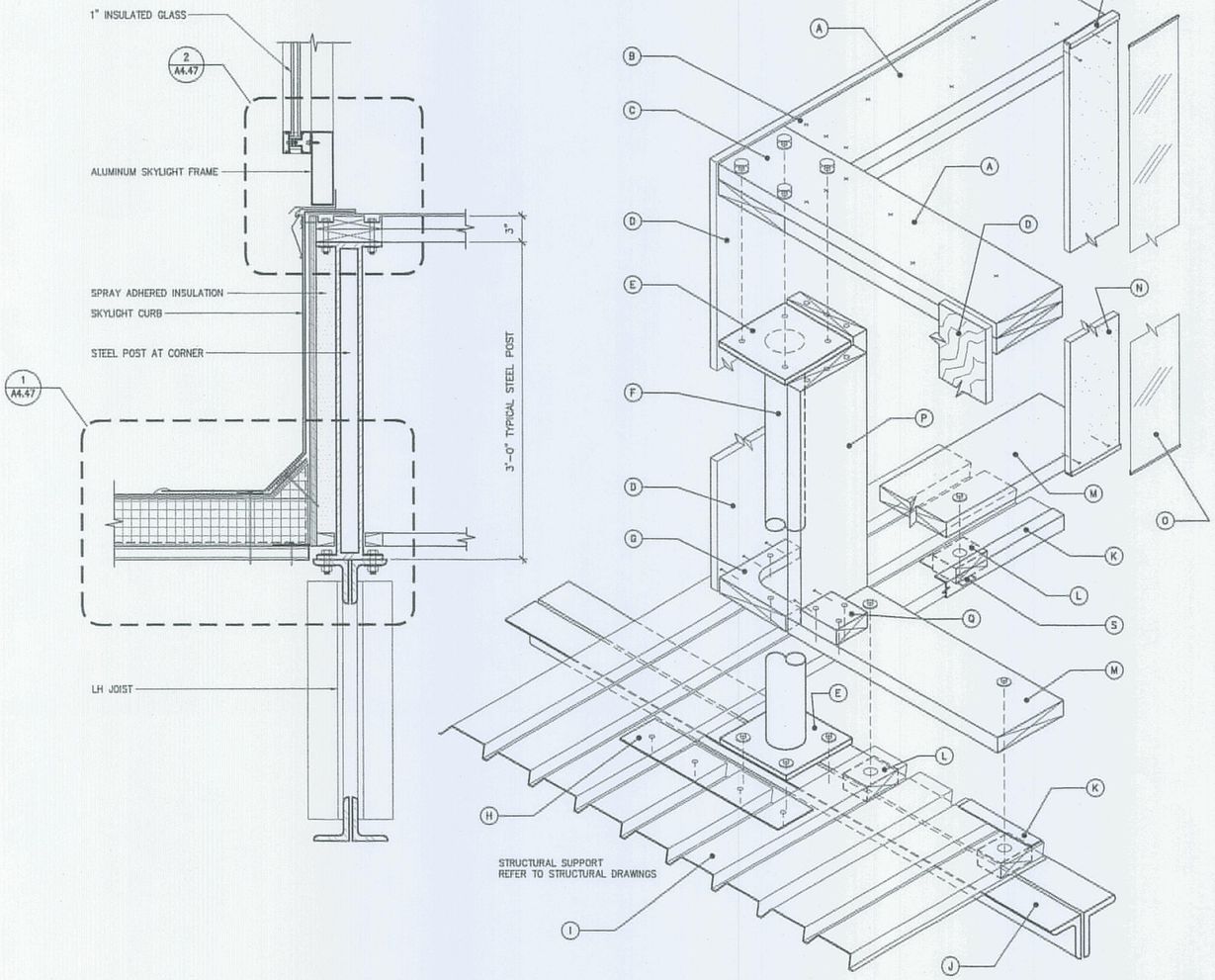


| | |
|---|---|
| A | 2X8 WOOD DOUBLE SILL |
| B | CORROSION RESISTANT SCREWS, 3 PER BOARD END MIN |
| C | RECESSED 4 – 5/8"ø BOLTS |
| D | 3/4" PLYWOOD SHEATHING |
| E | 7 1/2" X 7 1/2" X 1/2" STEEL FLANGE |
| F | 3"ø STEEL POST |
| G | 2X8 WOOD PLATE NAILER, CUT TO FIT AROUND STEEL POST |
| H | 1/8" STEEL PLATE ATTACHED TO ROOF DECK |
| I | 1 1/2" METAL ROOF DECK |
| J | LH JOIST TOP CHORD |
| K | METAL ROOF DECK EDGE TRIM |
| L | WOOD BLOCK IN ROOF DECK CAVITIES AT ALL BOLT LOCATIONS |
| M | 2X8 WOOD PLATE BOLTED TO LH JOIST TOP CHORD |
| N | 5/8" MOISTURE RESISTANT GWB |
| O | FIBERGLASS REINFORCED PANEL W/ SMOOTH SURFACE AND WHITE FF |
| P | 2X8 WOOD STUD W/ CORROSION RESISTANT SCREWS, 3 PER BOARD END MIN |
| Q | 2X4 WOOD BLOCKING @ ALL 2X8 STUDS |
| R | GWB EDGE TRIM (PAINT WHITE OR FF WHITE) |
| S | METAL FLAT CROSSBAR ANCHOR |

1 CURB DETAIL @ POST W/ EXPLODED ISOMETRIC DIAGRAM
1 1/2"=1'-0"  0 4" 8"

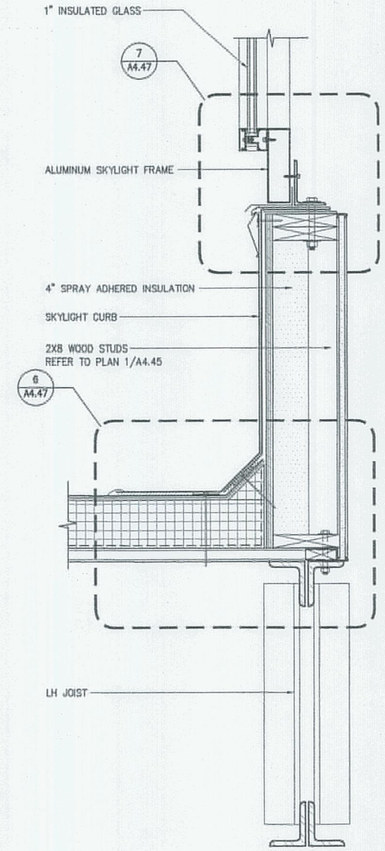


2 CURB DETAIL @ VERTICAL FRAME
1 1/2"=1'-0"  0 4" 8"

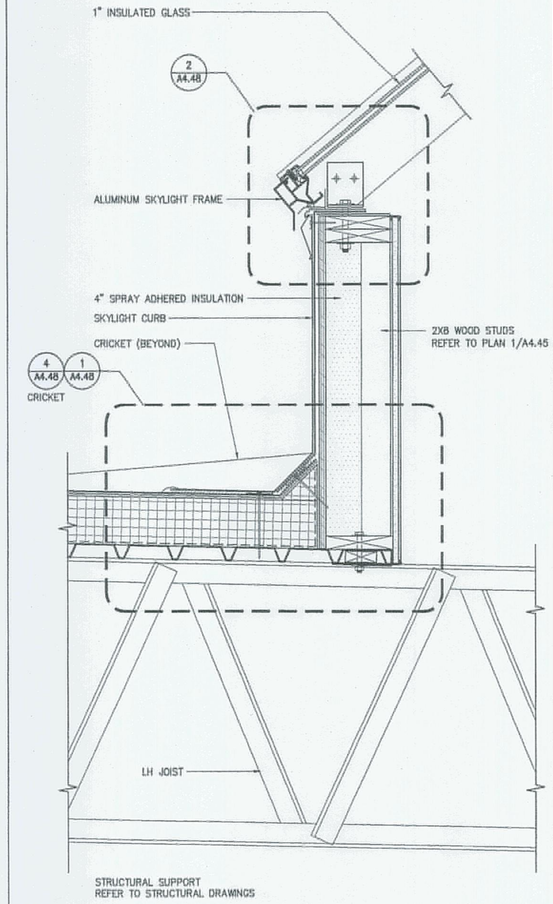


3 CURB DETAIL @ SLOPED FRAMED
1 1/2"=1'-0"  0 4" 8"

COORDINATE W/ STRUCTURAL DRAWINGS


AECOM USA, Inc.
66 Long Wharf
Boston, MA
T 617.723.1700 F 617.723.6856

AECOM
www.aecom.com

Allied Engineering
Mechanical Mechanical Electrical Consultants
160 Veranda Street
Portland, Maine 04103
T: 207.221.2266
F: 207.221.2266
Web: www.allied-eng.com


Allied Project No: 07010 | Cad File: A4.46.dwg

STATE OF MAINE
DEPARTMENT OF TRANSPORTATION

| DATE | |
|---|---|
| FED PIN NO: | |
| PIN NO: 16123.50 | |

LICENSED ARCHITECT TERRY P. ROOKARD No. 3360 STATE OF MAINE

SIGNATURE
TERRY P. ROOKARD
ARCH. LIN. NUMBER
3360
DATE MAY 1, 2009

| PROJECT INFORMATION | |
|---|---|
| PROGRAM | – |
| PROJECT MANAGER | WFP |
| DESIGNER | TV |
| CONSULTANT | ALLIED ENGINEERING |
| PROJECT RESIDENT | – |
| CONTRACTOR | – |
| PROJECT COMPLETION DATE | – |

MAINE DEPARTMENT OF TRANSPORTATION
ACADIA GATEWAY FACILITY
BUS MAINTENANCE FACILITY
SKYLIGHT II

© COPYRIGHT 2007 ALLIED ENGINEERING, INC.

SHEET NUMBER
A4.46
OF

Filename: – Date: – Division: – Username: –
J:\PROJECTS\3700-Trenton\CADD\A\Sheet\A4.46.dwg Aug 04, 2009 - 12:31pm

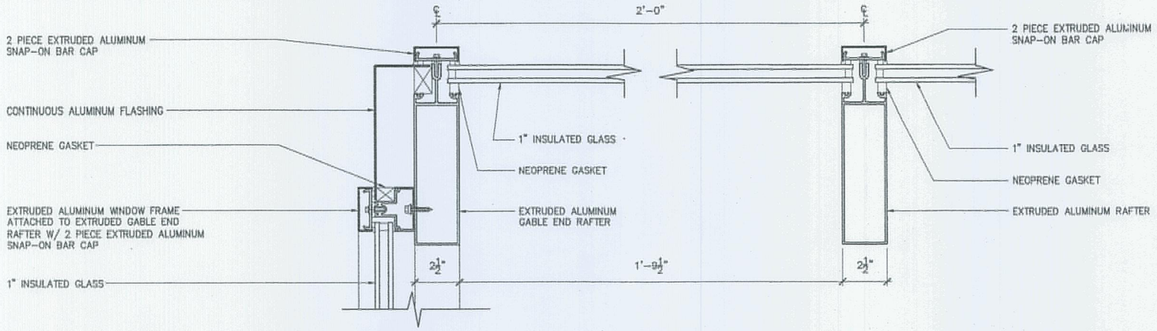


3 GABLE END RAFTER
3"=1'-0"

4 RAFTER
3"=1'-0"

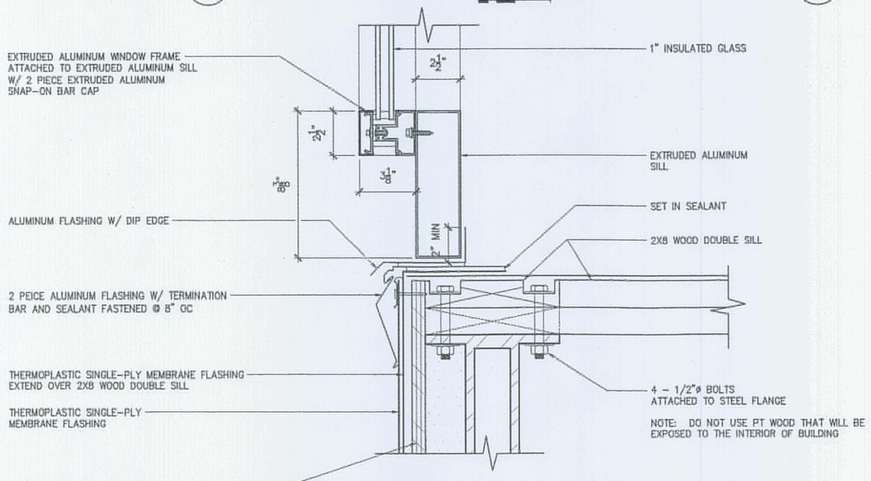


2 VERTICAL FRAME ASSEMBLY @ POST
3"=1'-0"

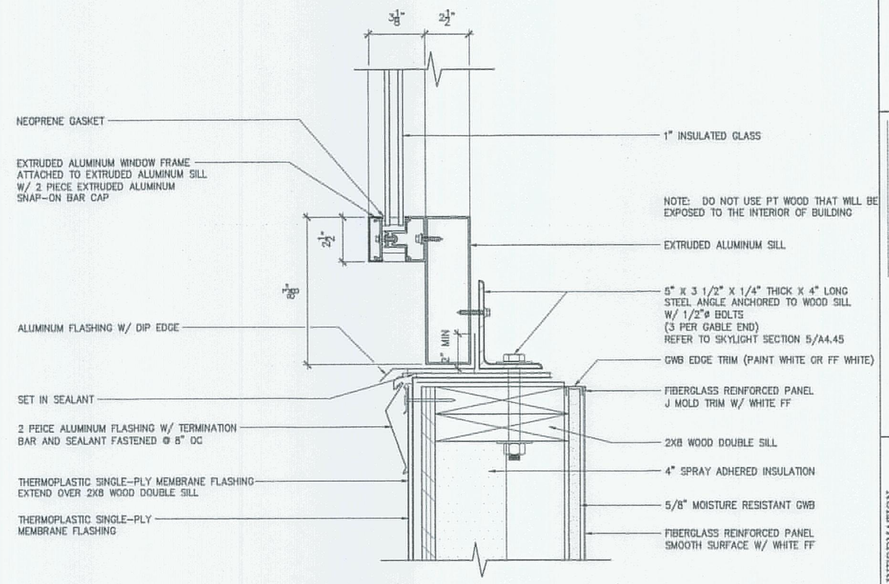


7 VERTICAL FRAME ASSEMBLY @ SILL
3"=1'-0"

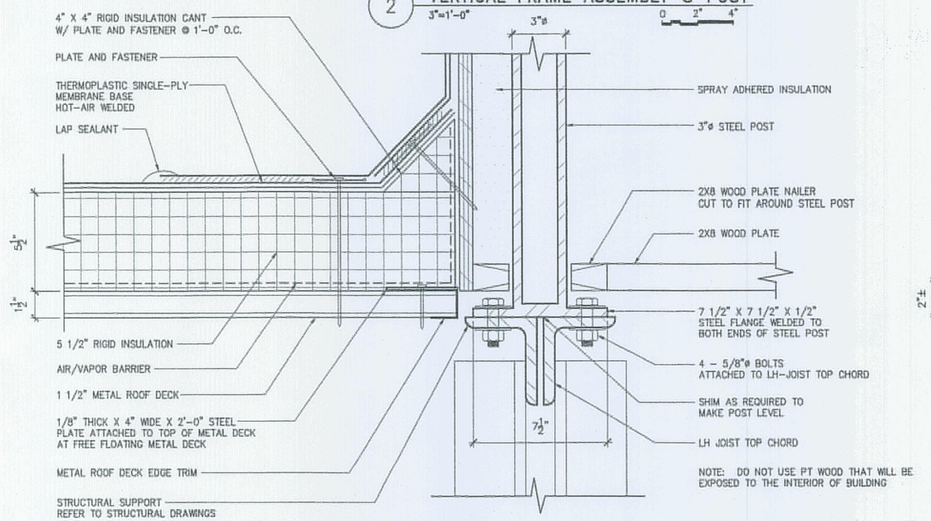


1 CURB DETAIL @ POST
3"=1'-0"

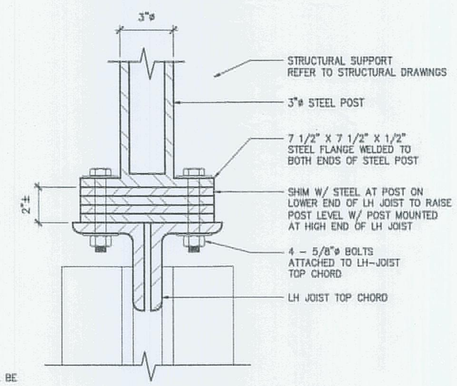


5 DETAIL @ SHIM COLUMN
3"=1'-0"

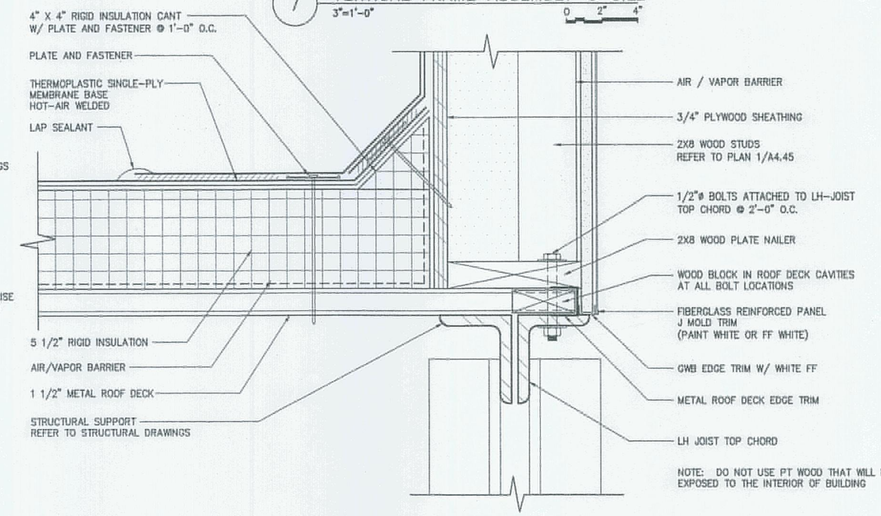


6 CURB DETAIL @ VERTICAL FRAME
3"=1'-0"

COORDINATE W/ STRUCTURAL DRAWINGS


AECOM USA, Inc.
66 Long Wharf
Boston, MA
T 617.723.1700 F 617.723.6856

AECOM
www.aecom.com

Allied Engineering
160 Veranda Street
Portland, Maine 04103
T: 207.221.1269
F: 207.221.1260
Web: www.allied-eng.com


Allied Project No: 07010 | Cad File: A4.47.dwg

STATE OF MAINE
DEPARTMENT OF TRANSPORTATION

DATE

FED PIN NO:

PIN NO: 16123.50

LICENSED ARCHITECT TERRY P. ROOKARD No. 3360 STATE OF MAINE

SIGNATURE
TERRY P. ROOKARD
ARCH. LIN. NUMBER
3360
DATE
MAY 1, 2009

INFORMATION

| PROJECT | | |
|---|---|---|
| PROGRAM | - | - |
| PROJECT MANAGER | WPP | - |
| DESIGNER | TV | - |
| CONSULTANT | ALLIED ENGINEERING | - |
| PROJECT RESIDENT | - | - |
| CONTRACTOR | - | - |
| PROJECT COMPLETION DATE | - | - |

MAINE DEPARTMENT OF TRANSPORTATION
ACADIA GATEWAY FACILITY
BUS MAINTENANCE FACILITY

SKYLIGHT III

© COPYRIGHT 2007 ALLIED ENGINEERING, INC.

SHEET NUMBER
A4.47
OF

Filename: - Division: - Date: - Username: -
J:\PROJECTS\3700-Trenton\CADD\Sheet\A4.47.dwg Aug 04, 2009 - 12:31pm

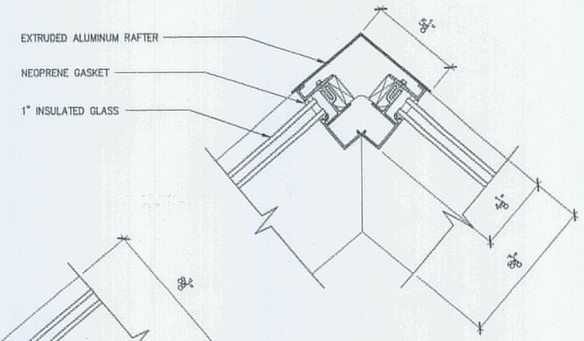


3 RIDGE DETAIL
3"=1'-0"  0 2" 4"

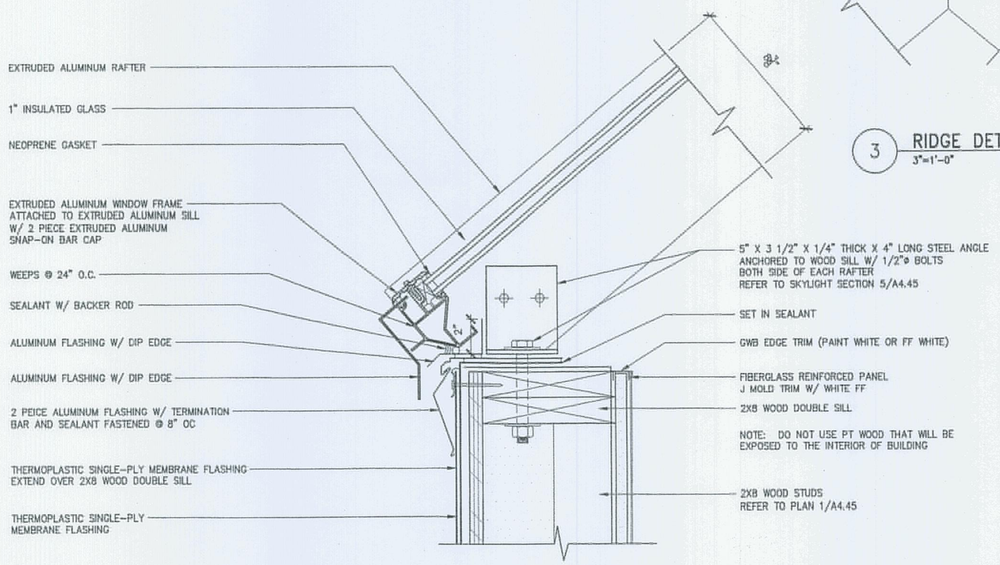


2 SLOPED FRAME ASSEMBLY
3"=1'-0"  0 2" 4"

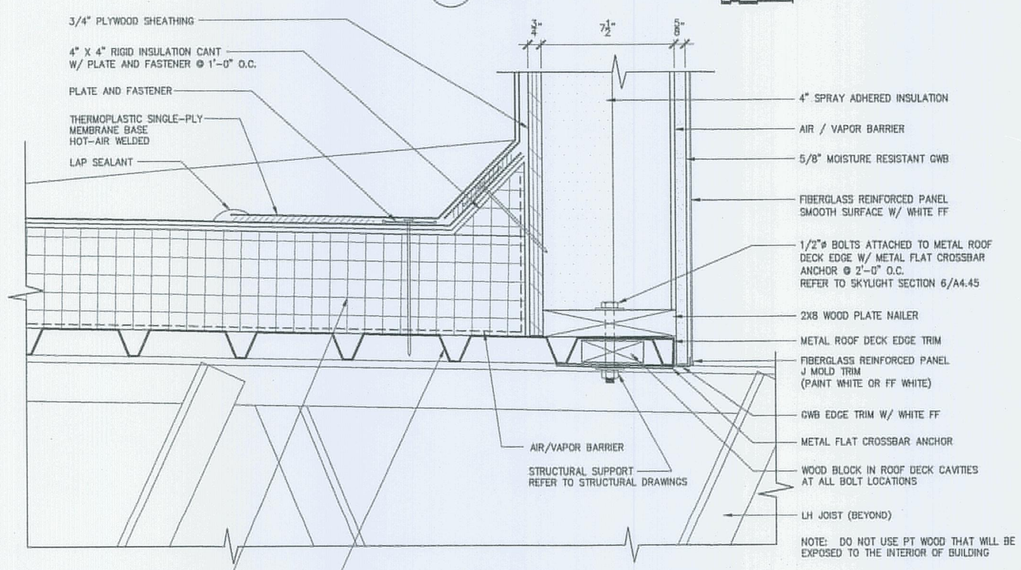


1 CURB DETAIL @ SLOPED FRAME
3"=1'-0"  0 2" 4"

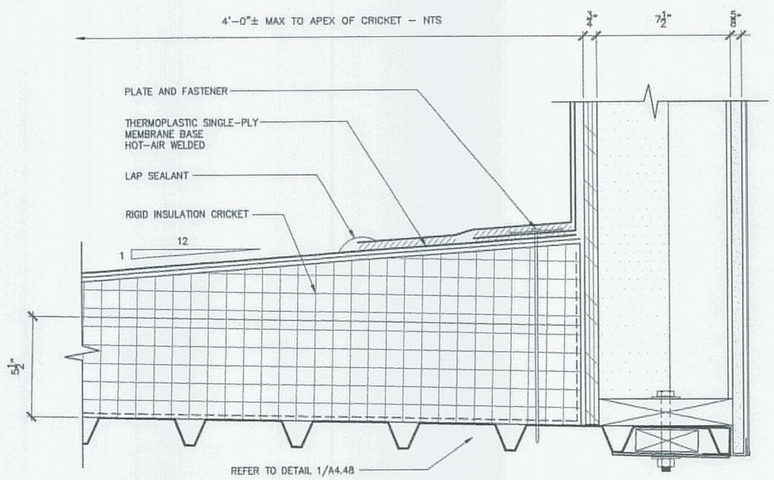


4 CURB DETAIL @ CRICKET
3"=1'-0"  0 2" 4"

COORDINATE W/ STRUCTURAL DRAWINGS

STATE OF MAINE
DEPARTMENT OF TRANSPORTATION

| DATE |
|---|
| |

FED PIN NO:
PIN NO: 16123.50

LICENSED ARCHITECT TERRY P. ROOKARD No. 3360 STATE OF MAINE

SIGNATURE
TERRY P. ROOKARD
ARCH. LIN. NUMBER
3360
DATE MAY 1, 2009

| PROJECT INFORMATION | |
|---|---|
| PROGRAM | - |
| PROJECT MANAGER | WFP |
| DESIGNER | TV |
| CONSULTANT | ALLIED ENGINEERING |
| PROJECT RESIDENT | - |
| CONTRACTOR | - |
| PROJECT COMPLETION DATE | - |

MAINE DEPARTMENT OF TRANSPORTATION
ACADIA GATEWAY FACILITY
BUS MAINTENANCE FACILITY
SKYLIGHT IV

© COPYRIGHT 2007 ALLIED ENGINEERING, INC.

SHEET NUMBER
A4.48
OF

TRANSPORTATION
AECOM USA, Inc.
66 Long Wharf
Boston, MA
T 617.723.1700 F 617.723.6866
AECOM
www.aecom.com

Allied Engineering
Structural Mechanical Civil/Site Engineering
160 Veranda Street
Portland, Maine 04103
T: 207.221.2260
F: 207.221.2266
Web: www.allied-eng.com

Allied Project No: 07010
Cad File: A4.48.dwg

Filename:- Division:- Date:- Username:-
J:\PROJECTS\3700-Trenton\CADD\Sheet\A4.48.dwg Aug 04, 2009 - 12:31pm

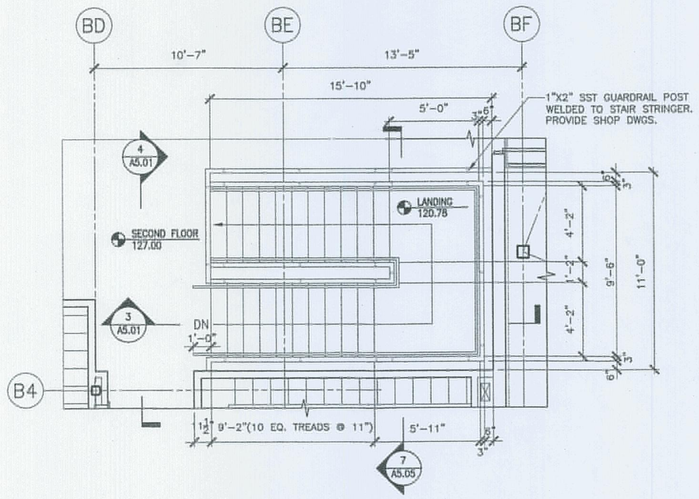


2 STAIR 01 – SECOND FLOOR PLAN
1/4"=1'-0"

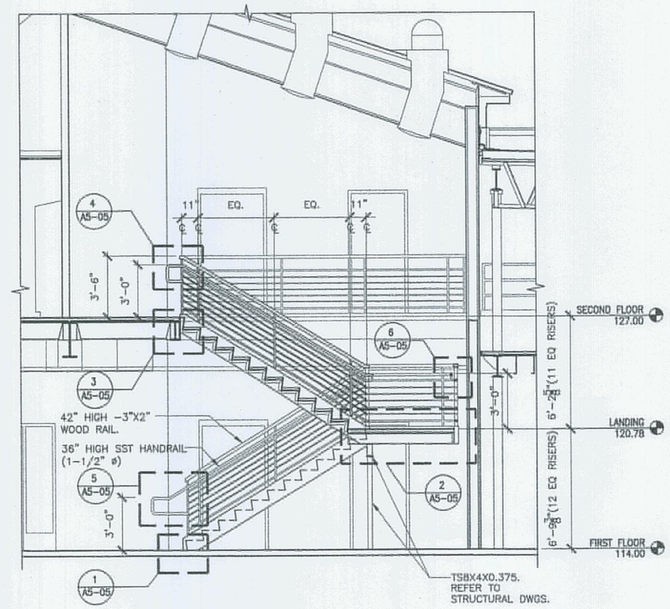


3 STAIR 01 – SECTION
1/4"=1'-0"

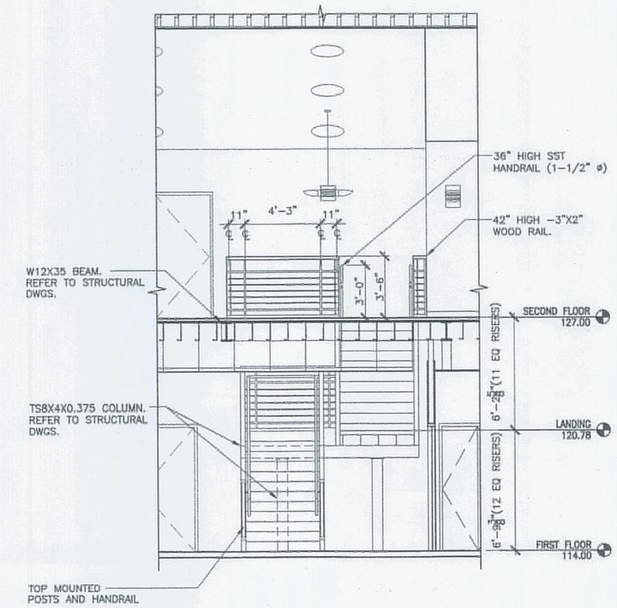


4 STAIR 01 – SECTION
1/4"=1'-0"

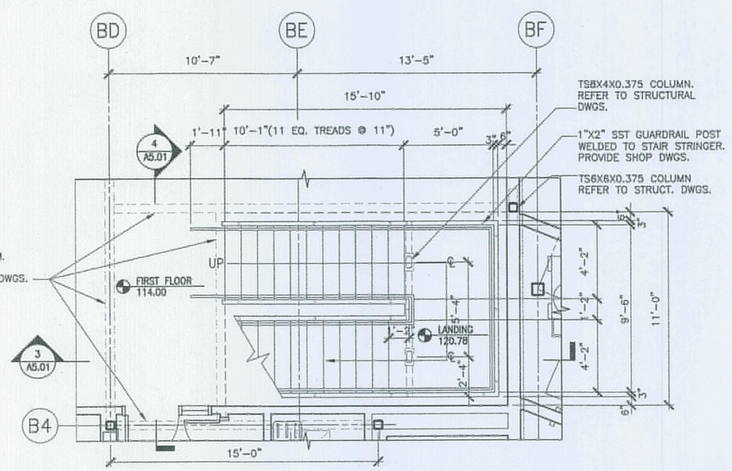


1 STAIR 01 – FIRST FLOOR PLAN
1/4"=1'-0"

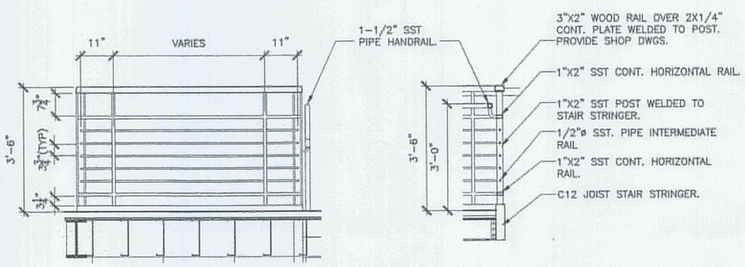


5 TYPICAL GUARDRAIL
1/2"=1'-0"

GUARDRAIL NOTES:

1. OPEN GUARDS SHALL HAVE BALUSTERS OR ORNAMENTAL PATTERNS SUCH THAT A 4" ø SPHERE CAN NOT PASS THROUGH ANY OPENING UP TO A HEIGHT OF 34" INCHES.

2. FROM 34" TO 42" ABOVE THE ADJACENT WALKING SURFACES, A SPHERE 8" ø SHALL NOT PASS.

3. THE TRIANGULAR OPENINGS FORMED BY RISER, TREAD AND BOTTOM RAIL AT THE OPEN SIDE OF A STAIRWAY SHALL BE OF A MAXIMUM SIZE THAT A SPHERE OF 6" ø CAN NOT PASS THROUGH THE OPENING.

HANDRAIL NOTES:

1. HANDRAIL HEIGHT, MEASURED ABOVE STAIR TREAD NOSINGS, OR FINISH SURFACE OF RAMP SLOPE SHALL BE UNIFORM, NOT LESS THAN 34 INCHES (864 MM) AND NOT MORE THAN 38 INCHES (965 MM).

2. HANDRAILS SHALL RETURN TO A WALL, GUARD OR THE WALKING SURFACE OR SHALL BE CONTINUOUS TO THE HANDRAIL OF AN ADJACENT STAIR FLIGHT OR RAMP RUN. AT STAIRWAYS WHERE HANDRAILS ARE NOT CONTINUOUS BETWEEN FLIGHTS, THE HANDRAILS SHALL EXTEND HORIZONTALLY AT LEAST 12 INCHES (305 MM) BEYOND THE TOP RISER AND CONTINUE TO SLOPE FOR THE DEPTH OF ONE TREAD BEYOND THE BOTTOM RISER. AT RAMPS WHERE HANDRAILS ARE NOT CONTINUOUS BETWEEN RUNS, THE HANDRAILS SHALL EXTEND HORIZONTALLY ABOVE THE LANDING 12 INCHES (305 MM) MINIMUM BEYOND THE TOP AND BOTTOM OF RAMP RUNS.

2 OF 2

AS ADV 9.23.09


TRANSPORTATION
AECOM USA, Inc.
66 Long Wharf
Boston, MA
T 617.723.1700 F 617.723.6856
AECOM
www.aecom.com

Allied Engineering
Architects Mechanical Electrical Engineering
160 Veranda Street
Portland, Maine 04103
T: 207.221.0505
F: 207.221.0506
Web: www.allied-eng.com


Allied Project No: 07010
Cad File: A5.01.dwg

STATE OF MAINE
DEPARTMENT OF TRANSPORTATION

| | DATE |
|---|---|
| | |
| FED PIN NO: | |
| PIN NO: 16123.50 | |

LICENSED ARCHITECT TERRY P. ROOKARD No. 3360 STATE OF MAINE

| INFORMATION | |
|---|---|
| SIGNATURE | TERRY P. ROOKARD |
| ARCH. LIN. NUMBER | 3360 |
| DATE | MAY 1, 2009 |

| PROJECT INFO | | DATE |
|---|---|---|
| PROGRAM | - | |
| PROJECT MANAGER | WFF | |
| DESIGNER | TV | |
| CONSULTANT | ALLIED ENGINEERING | |
| PROJECT RESIDENT | - | - |
| CONTRACTOR | - | - |
| PROJECT COMPLETION DATE | - | - |

MAINE DEPARTMENT OF TRANSPORTATION
ACADIA GATEWAY FACILITY
BUS MAINTENANCE FACILITY

STAIR 01
PLANS AND SECTIONS

© COPYRIGHT 2007 ALLIED ENGINEERING, INC.

SHEET NUMBER
A5.01
OF

Filename:- Division:- Date:- Username:-
J:\PROJECTS\3706-Trenton\CAD\A\Sheet\A5.01.dwg Aug 04, 2009 - 12:31pm

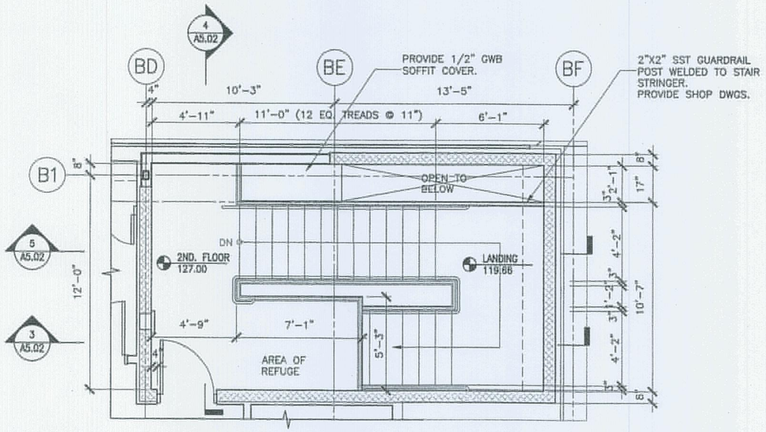


2 STAIR 02 – SECOND FLOOR PLAN
1/4"=1'-0"

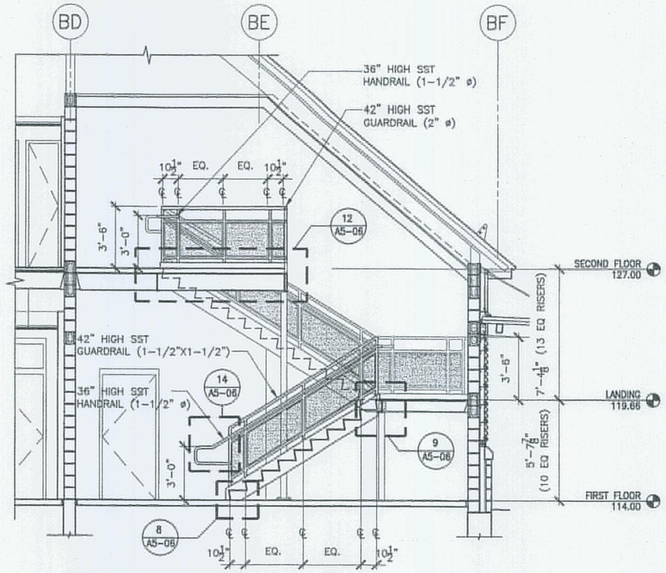


3 STAIR 02 – SECTION
1/4"=1'-0"

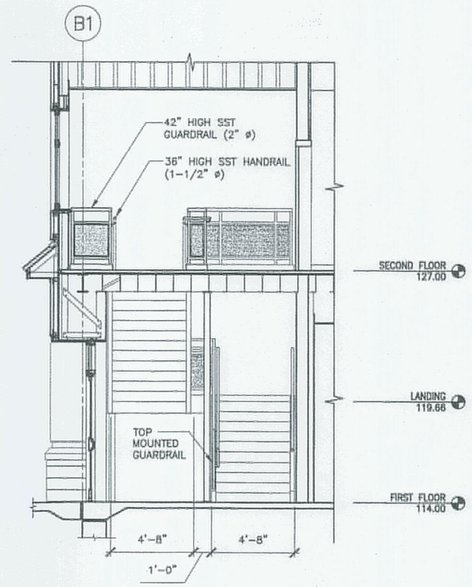


4 STAIR 02 – SECTION
1/4"=1'-0"

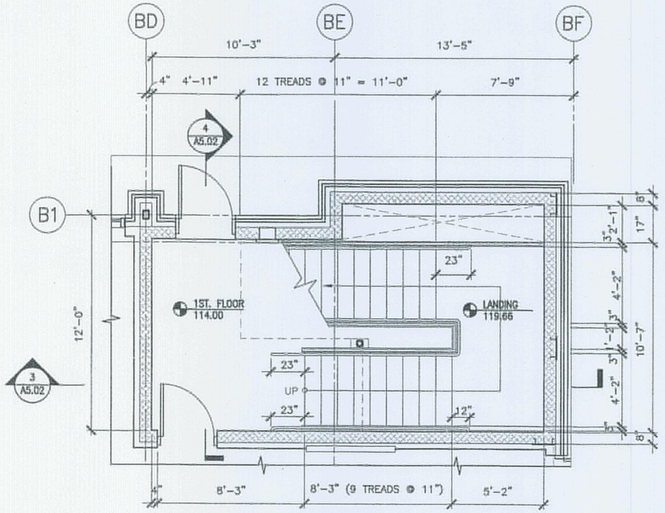


1 STAIR 02 – FIRST FLOOR PLAN
1/4"=1'-0"

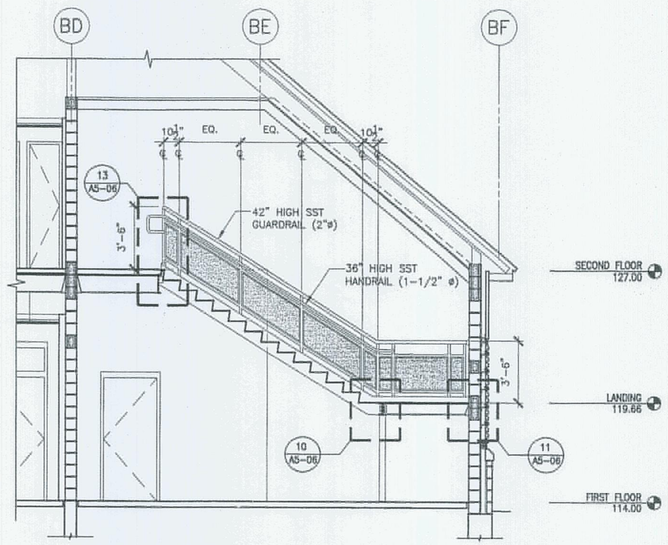


5 STAIR 02 – SECTION
1/4"=1'-0"

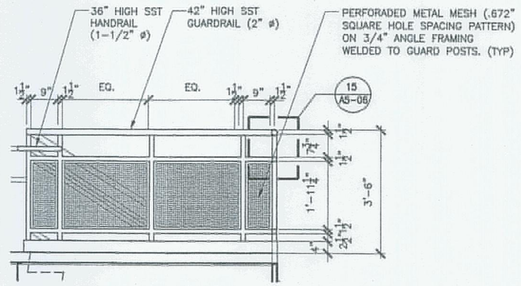


6 TYPICAL GUARDRAIL
1/2"=1'-0"

GUARDRAIL NOTES:

1. OPEN GUARDS SHALL HAVE BALUSTERS OR ORNAMENTAL PATTERNS SUCH THAT A 4" ø SPHERE CAN NOT PASS THROUGH ANY OPENING UP TO A HEIGHT OF 34" INCHES.

2. FROM 34" TO 42" ABOVE THE ADJACENT WALKING SURFACES, A SPHERE 8" ø SHALL NOT PASS.

3. THE TRIANGULAR OPENINGS FORMED BY RISER, TREAD AND BOTTOM RAIL AT THE OPEN SIDE OF A STAIRWAY SHALL BE OF A MAXIMUM SIZE THAT A SPHERE OF 6" ø CAN NOT PASS THROUGH THE OPENING.

HANDRAIL NOTES:

1. HANDRAIL HEIGHT, MEASURED ABOVE STAIR TREAD NOSINGS, OR FINISH SURFACE OF RAMP SLOPE SHALL BE UNIFORM, NOT LESS THAN 34 INCHES (864 MM) AND NOT MORE THAN 38 INCHES (965 MM).

2. HANDRAILS SHALL RETURN TO A WALL, GUARD OR THE WALKING SURFACE OR SHALL BE CONTINUOUS TO THE HANDRAIL OF AN ADJACENT STAIR FLIGHT OR RAMP RUN. AT STAIRWAYS WHERE HANDRAILS ARE NOT CONTINUOUS BETWEEN FLIGHTS, THE HANDRAILS SHALL EXTEND HORIZONTALLY AT LEAST 12 INCHES (305 MM) BEYOND THE TOP RISER AND CONTINUE TO SLOPE FOR THE DEPTH OF ONE TREAD BEYOND THE BOTTOM RISER. AT RAMPS WHERE HANDRAILS ARE NOT CONTINUOUS BETWEEN RUNS, THE HANDRAILS SHALL EXTEND HORIZONTALLY ABOVE THE LANDING 12 INCHES (305 MM) MINIMUM BEYOND THE TOP AND BOTTOM OF RAMP RUNS.


TRANSPORTATION
AECOM USA, Inc.
69 Long Wharf
Boston, MA
T 617.723.1700 F 617.723.6856
AECOM
www.aecom.com

Allied Engineering
Structural Mechanical Electrical Engineering
160 Veranda Street
Portland, Maine 04103
T: 207.231.2868
F: 207.781.2366
Web: www.allied-eng.com


Allied Project No: 07010
Cad File: A5.02.dwg

STATE OF MAINE
DEPARTMENT OF TRANSPORTATION

| DATE | |
|---|---|
| | |

FED PIN NO:
PIN NO: 16123.50

LICENSED ARCHITECT TERRY P. ROOKARD No. 3360 STATE OF MAINE

| | |
|---|---|
| SIGNATURE | TERRY P. ROOKARD |
| ARCH. LIN. NUMBER | 3360 |
| DATE | MAY 1, 2009 |

| PROJECT INFORMATION | | |
|---|---|---|
| PROGRAM | - | |
| PROJECT MANAGER | WFP | |
| DESIGNER | TV | |
| CONSULTANT | ALLIED ENGINEERING | |
| PROJECT RESIDENT | - | |
| CONTRACTOR | - | |
| PROJECT COMPLETION DATE | - | |

MAINE DEPARTMENT OF TRANSPORTATION
ACADIA GATEWAY FACILITY
BUS MAINTENANCE FACILITY

STAIR 02
PLANS AND SECTIONS

© COPYRIGHT 2009 ALLIED ENGINEERING, INC.

SHEET NUMBER
A5.02
OF

Filename:- Date:- Division:- Username:-
J:\PROJECTS\3700-Trenton\CAD\A\Sheet\A5.02.dwg Aug 04, 2009 - 12:32pm

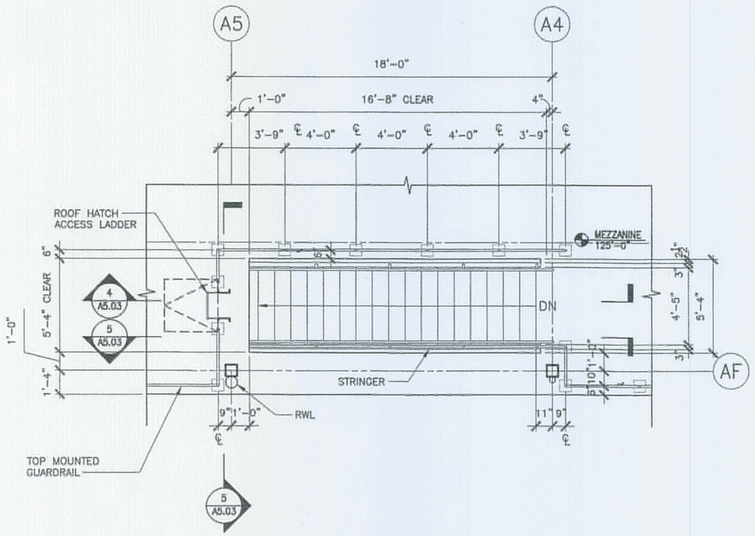


2 STAIR 03 – SECOND FLOOR PLAN
1/4"=1'-0"

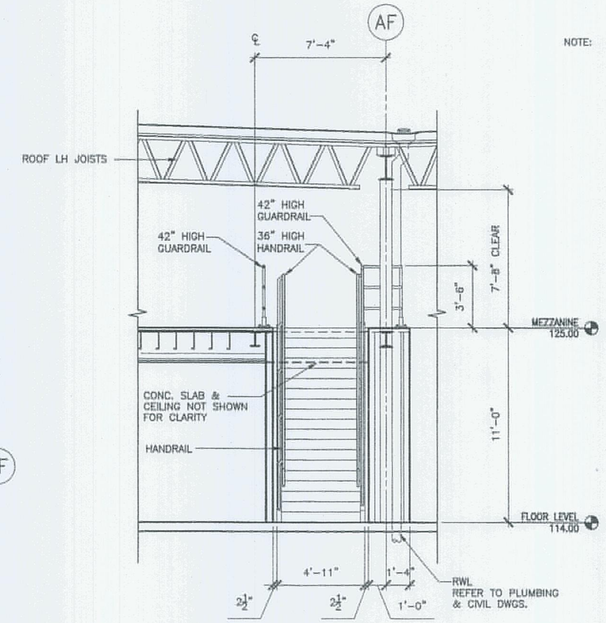


3 STAIR 03 – SECTION
1/4"=1'-0"

NOTE: CENTER ROOF ACCESS HATCH BETWEEN ROOF LH JOISTS VIF

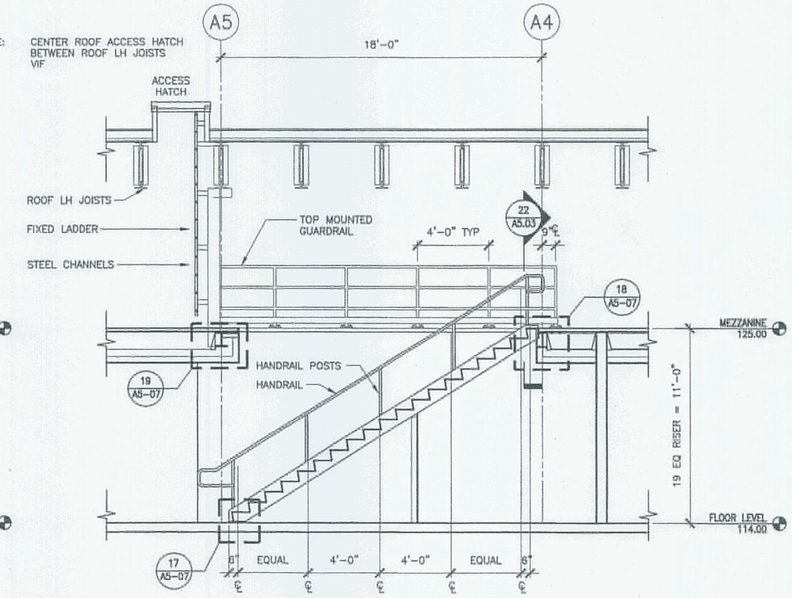


4 STAIR 03 – SECTION
1/4"=1'-0"

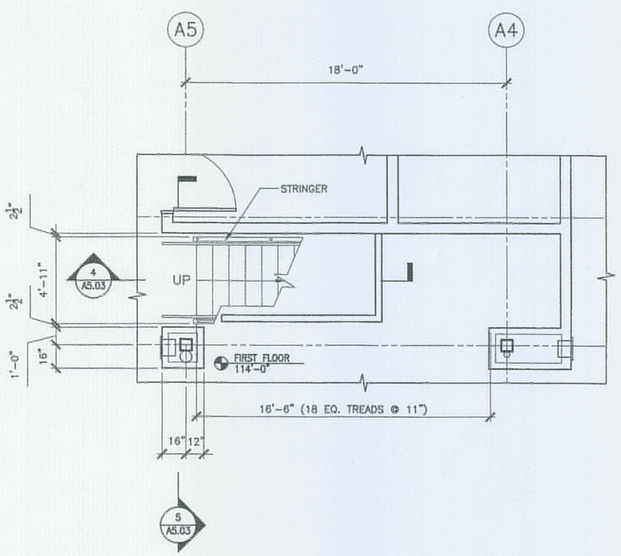


1 STAIR 03 – FIRST FLOOR PLAN
1/4"=1'-0"

GUARDRAIL NOTES:

1. IN AREAS THAT ARE NOT OPEN TO THE PUBLIC WITHIN OCCUPANCIES IN GROUP I-3, F, H OR S, BALUSTERS, HORIZONTAL INTERMEDIATE RAILS OR OTHER CONSTRUCTION SHALL NOT PERMIT A SPHERE WITH A DIAMETER OF 21 INCHES (533 MM) TO PASS THROUGH ANY OPENING.

HANDRAIL NOTES:

1. HANDRAIL HEIGHT, MEASURED ABOVE STAIR TREAD NOSINGS, OR FINISH SURFACE OF RAMP SLOPE SHALL BE UNIFORM, NOT LESS THAN 34 INCHES (864 MM) AND NOT MORE THAN 38 INCHES (965 MM).

2. HANDRAILS SHALL RETURN TO A WALL, GUARD OR THE WALKING SURFACE OR SHALL BE CONTINUOUS TO THE HANDRAIL OF AN ADJACENT STAIR FLIGHT OR RAMP RUN. AT STAIRWAYS WHERE HANDRAILS ARE NOT CONTINUOUS BETWEEN FLIGHTS, THE HANDRAILS SHALL EXTEND HORIZONTALLY AT LEAST 12 INCHES (305 MM) BEYOND THE TOP RISER AND CONTINUE TO SLOPE FOR THE DEPTH OF ONE TREAD BEYOND THE BOTTOM RISER. AT RAMPS WHERE HANDRAILS ARE NOT CONTINUOUS BETWEEN RUNS, THE HANDRAILS SHALL EXTEND HORIZONTALLY ABOVE THE LANDING 12 INCHES (305 MM) MINIMUM BEYOND THE TOP AND BOTTOM OF RAMP RUNS.

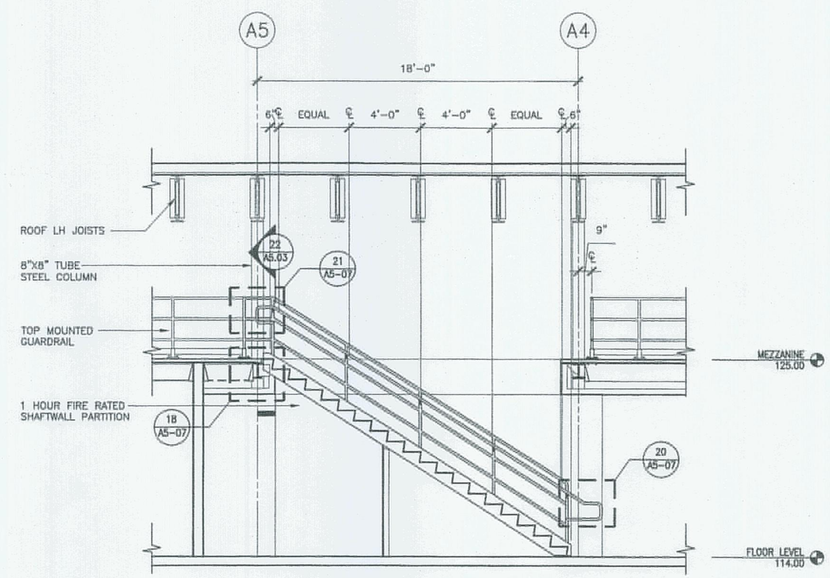


5 STAIR 03 – SECTION
1/4"=1'-0"


AECOM USA, Inc.
66 Long Wharf
Boston, MA
T 617.723.1700 F 617.723.6856

AECOM
www.aecom.com

Allied Engineering
160 Veranda Street
Portland, Maine 04103
T: 207.233.3380
F: 207.233.3266
Web: www.allied-eng.com


Allied Project No: 07010
Cad File: A5.03.dwg

STATE OF MAINE
DEPARTMENT OF TRANSPORTATION

| | DATE |
|---|---|
| | |
| FED PIN NO: | |
| PIN NO: 16123.50 | |

LICENSED ARCHITECT TERRY P. ROOKARD No. 3360 STATE OF MAINE

| | |
|---|---|
| SIGNATURE | TERRY P. ROOKARD |
| ARCH. LIN. NUMBER | 3360 |
| DATE | MAY 1, 2009 |

| PROJECT INFORMATION | |
|---|---|
| PROGRAM | – |
| PROJECT MANAGER | WFP |
| DESIGNER | TV |
| CONSULTANT | ALLIED ENGINEERING |
| PROJECT RESIDENT | – |
| CONTRACTOR | – |
| PROJECT COMPLETION DATE | – |

MAINE DEPARTMENT OF TRANSPORTATION
ACADIA GATEWAY FACILITY
BUS MAINTENANCE FACILITY

STAIR 03
PLANS AND SECTIONS

© COPYRIGHT 2007 ALLIED ENGINEERING, INC.

SHEET NUMBER
A5.03
OF

Filename: - Division: - Date: - Username: -
J:\PROJECTS\37001-Trenton\CAD\A\Sheet\A5.03.dwg Aug 04, 2009 - 12:32pm

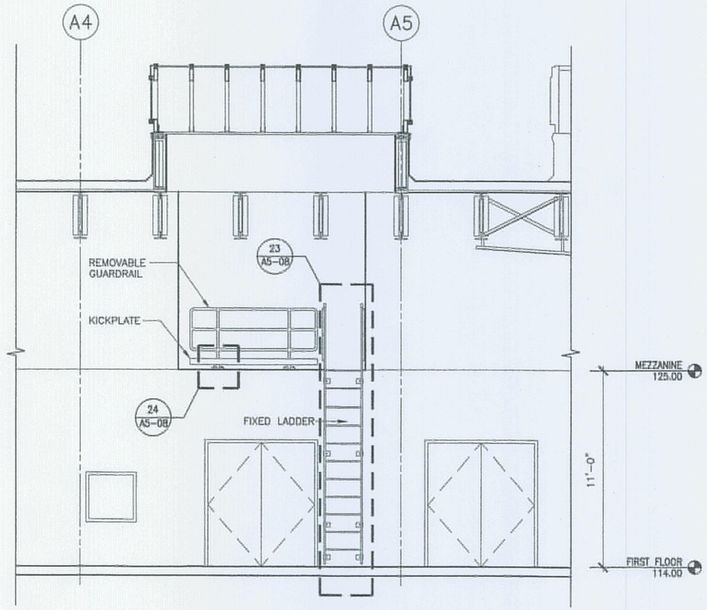


2 MEZZANINE LADDER ELEVATION
1/4"=1'-0"

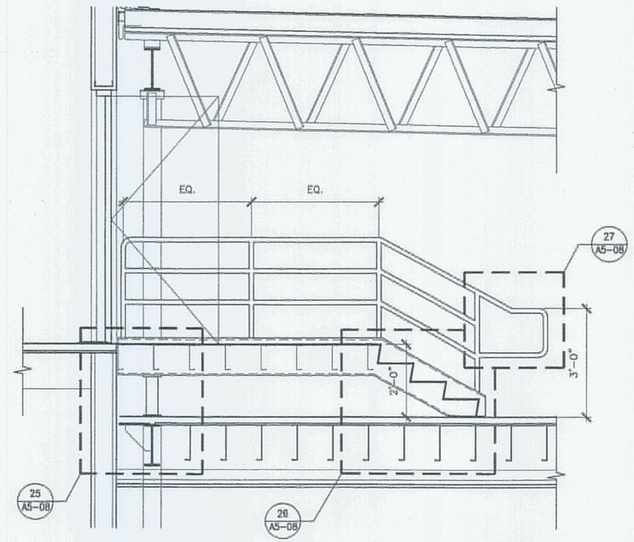


4 STAIR 04 – SECTION
1/2"=1'-0"

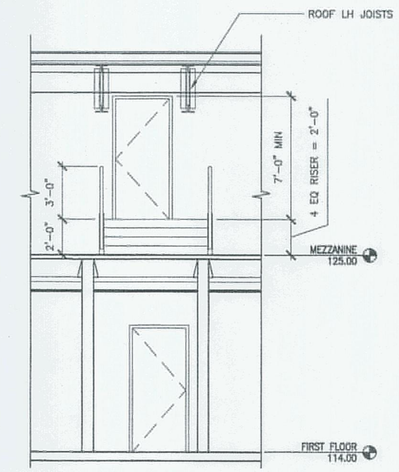


5 STAIR 04 – SECTION
1/4"=1'-0"

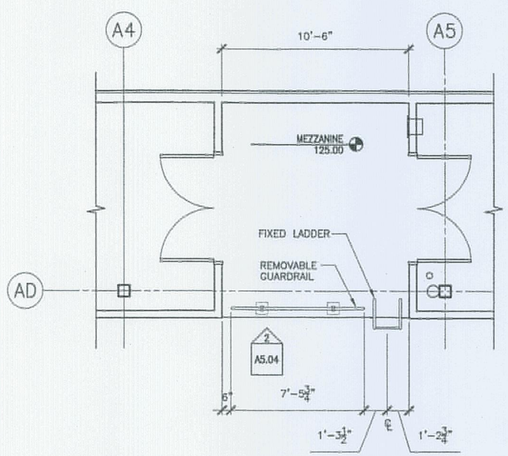


1 MEZZANINE LADDER PLAN
1/4"=1'-0"

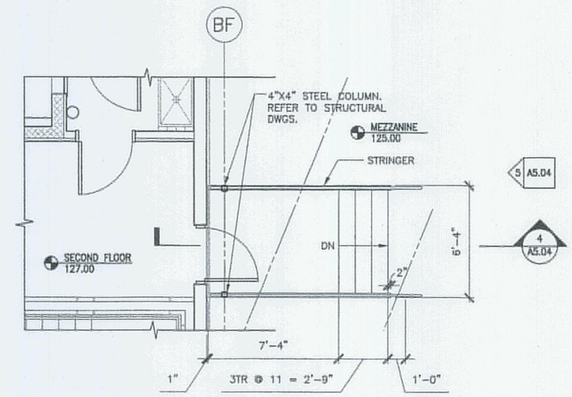


3 STAIR 04 – SECOND FLOOR PLAN
1/4"=1'-0"

GUARDRAIL NOTES:

1. GUARDS SHALL BE LOCATED ALONG OPEN-SIDED WALKING SURFACES, MEZZANINES, INDUSTRIAL EQUIPMENT PLATFORMS, STAIRWAYS, RAMPS AND LANDINGS THAT ARE LOCATED MORE THAN 30 INCHES (762 MM) ABOVE THE FLOOR OR GRADE BELOW.

2. IN AREAS THAT ARE NOT OPEN TO THE PUBLIC WITHIN OCCUPANCIES IN GROUP I-3, F, H OR S, BALUSTERS, HORIZONTAL INTERMEDIATE RAILS OR OTHER CONSTRUCTION SHALL NOT PERMIT A SPHERE WITH A DIAMETER OF 21 INCHES (533 MM) TO PASS THROUGH ANY OPENING.

HANDRAIL NOTES:

1. HANDRAIL HEIGHT, MEASURED ABOVE STAIR TREAD NOSINGS, OR FINISH SURFACE OF RAMP SLOPE SHALL BE UNIFORM, NOT LESS THAN 34 INCHES (864 MM) AND NOT MORE THAN 38 INCHES (965 MM).

2. HANDRAILS SHALL RETURN TO A WALL, GUARD OR THE WALKING SURFACE OR SHALL BE CONTINUOUS TO THE HANDRAIL OF AN ADJACENT STAIR FLIGHT OR RAMP RUN. AT STAIRWAYS WHERE HANDRAILS ARE NOT CONTINUOUS BETWEEN FLIGHTS, THE HANDRAILS SHALL EXTEND HORIZONTALLY AT LEAST 12 INCHES (305 MM) BEYOND THE TOP RISER AND CONTINUE TO SLOPE FOR THE DEPTH OF ONE TREAD BEYOND THE BOTTOM RISER. AT RAMPS WHERE HANDRAILS ARE NOT CONTINUOUS BETWEEN RUNS, THE HANDRAILS SHALL EXTEND HORIZONTALLY ABOVE THE LANDING 12 INCHES (305 MM) MINIMUM BEYOND THE TOP AND BOTTOM OF RAMP RUNS.


TRANSPORTATION
AECOM USA, Inc.
66 Long Wharf
Boston, MA
T 617.723.1700 F 617.723.6856

AECOM
www.aecom.com

Allied Engineering
160 Veranda Street
Portland, Maine 04103
T: 207.231.2260
F: 207.231.3256
Web: www.allied-eng.com


Allied Project No: 07010
Cad File: A5.04.dwg

STATE OF MAINE
DEPARTMENT OF TRANSPORTATION

| | DATE |
|---|---|
| | |
| FED PIN NO: | |
| PIN NO: 16123.50 | |

LICENSED ARCHITECT TERRY P. ROOKARD No. 3360 STATE OF MAINE

| PROJECT INFORMATION | |
|---|---|
| PROGRAM | – |
| PROJECT MANAGER | WFF |
| DESIGNER | TV |
| CONSULTANT | ALLIED ENGINEERING |
| PROJECT RESIDENT | – |
| CONTRACTOR | – |
| PROJECT COMPLETION DATE | – |

SIGNATURE
TERRY P. ROOKARD
ARCH. LIN. NUMBER
3360
DATE MAY 1, 2009

MAINE DEPARTMENT OF TRANSPORTATION
ACADIA GATEWAY FACILITY
BUS MAINTENANCE FACILITY

STAIR 04 AND FIXED LADDER
PLANS AND SECTIONS

© COPYRIGHT 2007 ALLIED ENGINEERING, INC.

SHEET NUMBER
A5.04
OF

Filename:- Division:- Date:- Username:-
J:\PROJECTS\3700-Trenton\CAD\A\Sheet\A5.04.dwg Aug 04, 2009 - 12:32pm

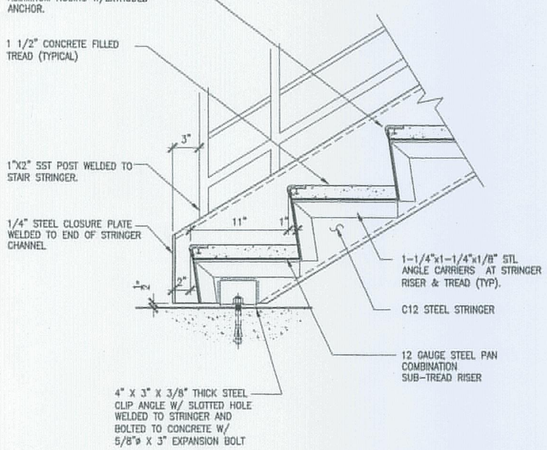


1 A5.05 METAL STAIR BOTTOM DETAIL

1 1/2" = 1'-0"

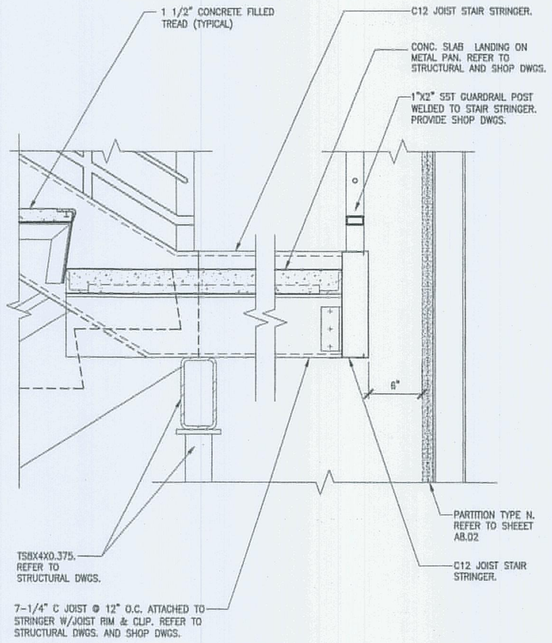


2 A5.05 INTERMEDIATE LANDING

1 1/2" = 1'-0"

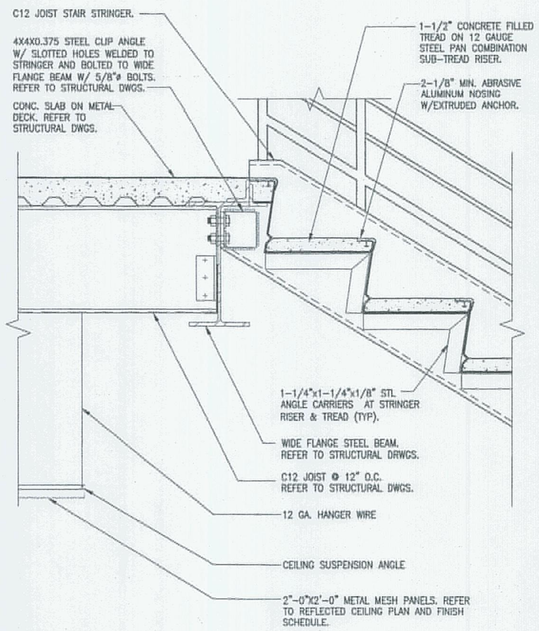


3 A5.05 METAL STAIR TOP DETAIL

1 1/2" = 1'-0"

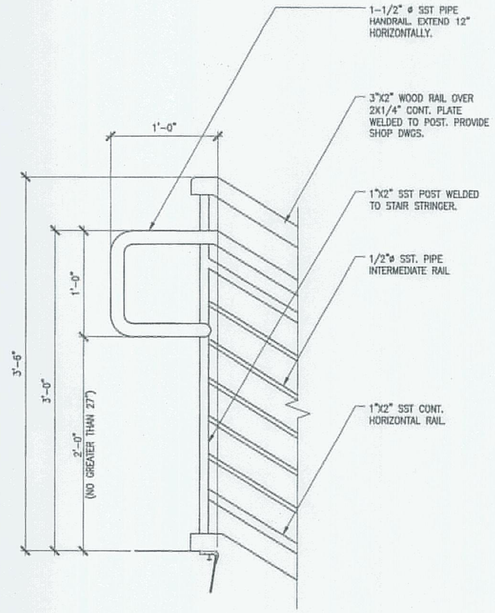


4 A5.05 HANDRAIL EXTENSION @ TOP OF RUN

1 1/2" = 1'-0"

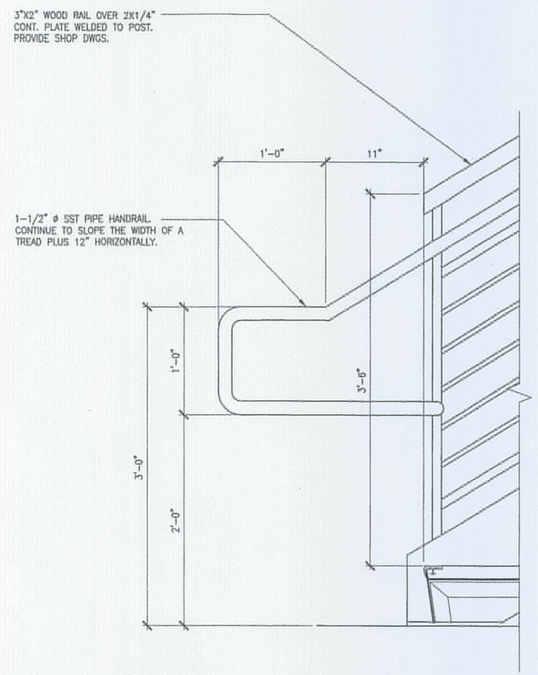


5 A5.05 HANDRAIL EXTENSION @ BOTTOM OF RUN

1 1/2" = 1'-0"

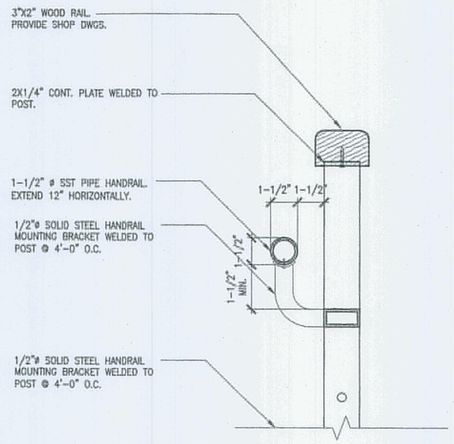


6 A5.05 HANDRAIL / GUARDRAIL DETAIL

3" = 1'-0"

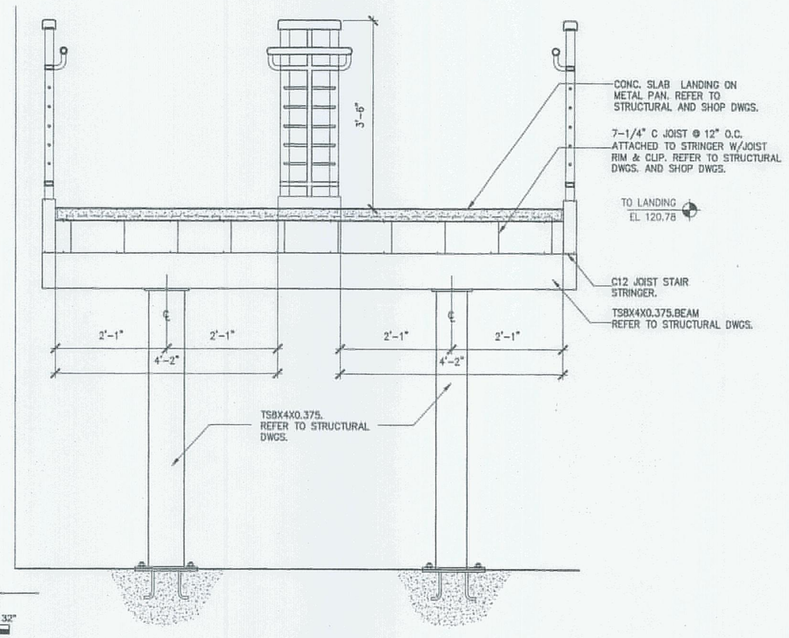


7 A5.05 LANDING DETAIL

3/4" = 1'-0"

TRANSPORTATION

AECOM USA, Inc.
66 Long Wharf
Boston, MA
T 617.723.1700 F 617.723.6856

AECOM

www.aecom.com

Allied Engineering
Structural Mechanical Electrical Consultants

160 Veranda Street
Portland, Maine 04103
T: 207.221.2360
F: 207.221.2366
Web: www.alliedeng.com

Allied Project No: 07010

Cad File: A5.05.dwg

STATE OF MAINE
DEPARTMENT OF TRANSPORTATION

| | DATE |
|---|---|
| | |
| | |
| | |

FED PIN NO:

PIN NO: 16123.50

LICENSED ARCHITECT TERRY P. ROOKARD No. 3360 STATE OF MAINE

| PROJECT INFORMATION | |
|---|---|
| PROGRAM | - |
| PROJECT MANAGER | WFF |
| DESIGNER | TV |
| CONSULTANT | ALLIED ENGINEERING |
| PROJECT RESIDENT | - |
| CONTRACTOR | - |
| PROJECT COMPLETION DATE | - |

SIGNATURE
TERRY P. ROOKARD
ARCH. LIC. NUMBER
3360
DATE MAY 1, 2009

MAINE DEPARTMENT OF TRANSPORTATION
ACADIA GATEWAY FACILITY
BUS MAINTENANCE FACILITY

STAIR 01 DETAILS

© COPYRIGHT 2007 ALLIED ENGINEERING, INC.

SHEET NUMBER
A5.05
OF

Filename: - Division: - Date: - Username: -

J:\PROJECTS\3700-Trenton\CAD\A\Sheet\A5.05.dwg Aug 04, 2009 - 12:33pm

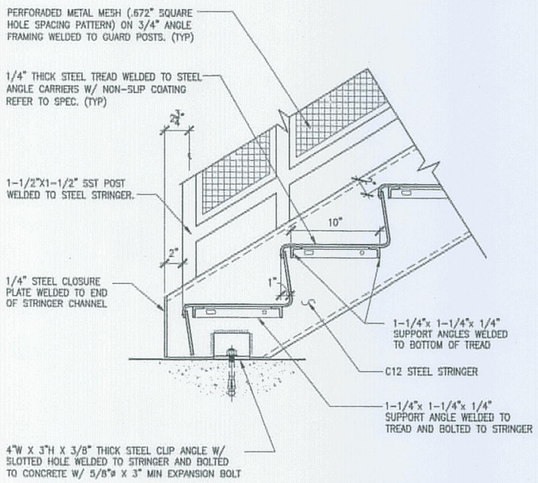


8 A5.06 METAL STAIR BOTTOM DETAIL

1 1/2" = 1'-0"

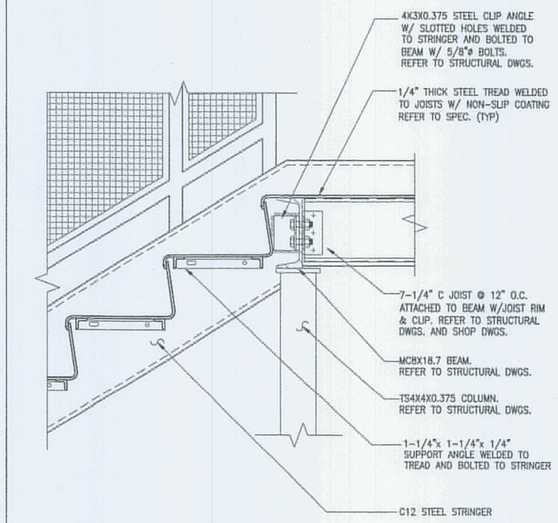


9 A5.06 INTERMEDIATE LANDING DETAIL A

1 1/2" = 1'-0"

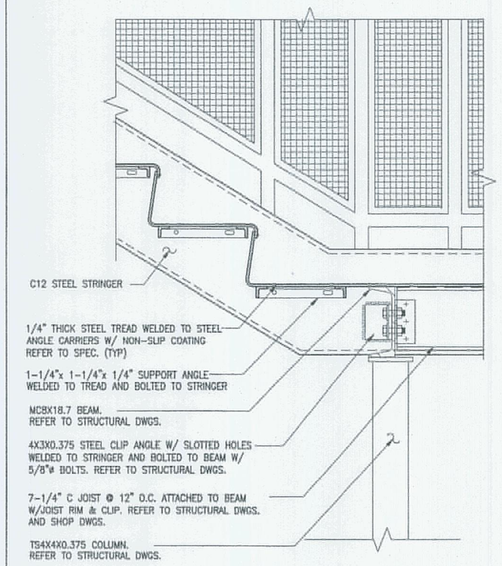


10 A5.06 INTERMEDIATE LANDING DETAIL B

1 1/2" = 1'-0"

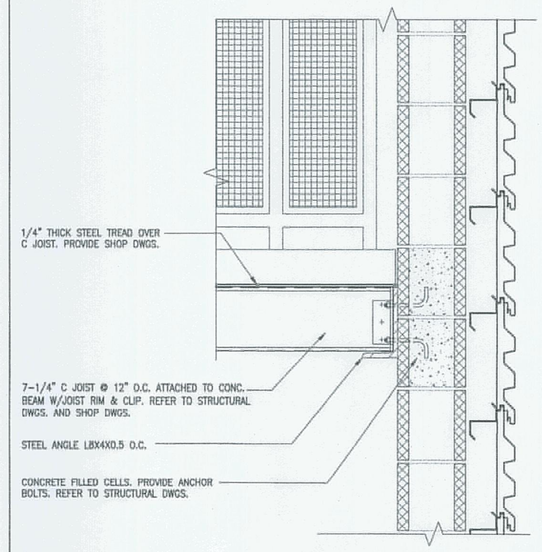


11 A5.06 INTERMEDIATE LANDING TO WALL

1 1/2" = 1'-0"

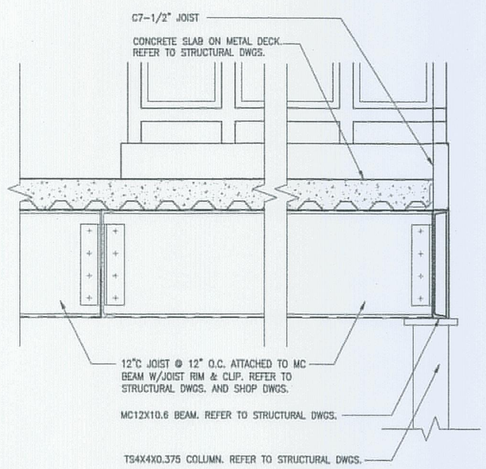


12 A5.06 METAL STAIR TOP DETAIL

1 1/2" = 1'-0"

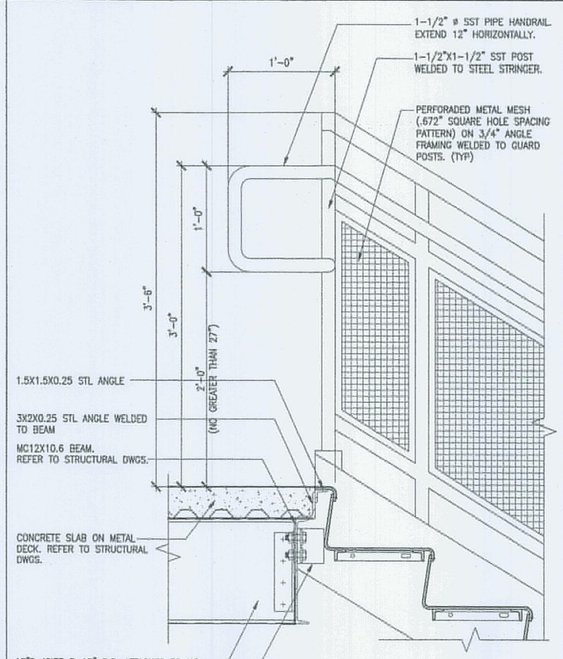


13 A5.06 METAL STAIR TOP & HANDRAIL DETAIL

HALF SCALE

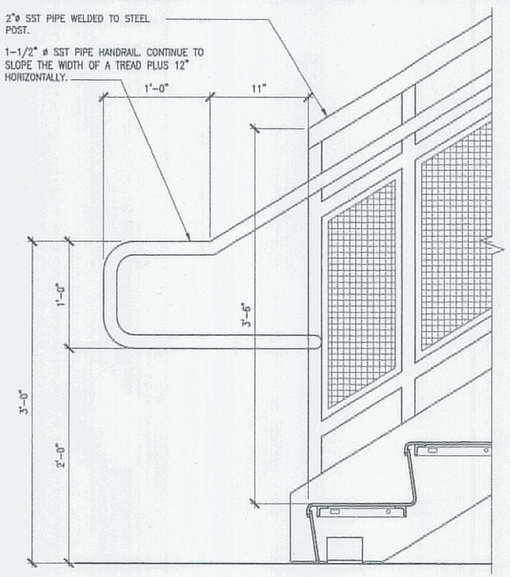


14 A5.06 HANDRAIL EXTENSION @ BOTTOM OF RUN

1 1/2" = 1'-0"

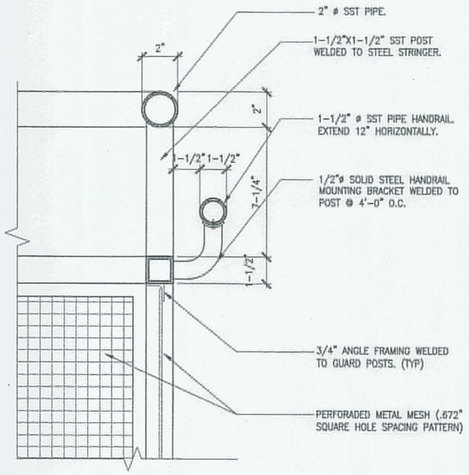


15 A5.06 HANDRAIL/GUARDRAIL DETAIL

1 1/2" = 1'-0"


AECOM USA, Inc.
66 Long Wharf
Boston, MA
T 617.723.1700 F 617.723.6856

AECOM
www.aecom.com

Allied Engineering
160 Veranda Street
Portland, Maine 04103
T: 207.221.2260
F: 207.221.2266
Web: www.allied-eng.com


Allied Project No: 07010 | Cad File: A5.06.dwg

STATE OF MAINE
DEPARTMENT OF TRANSPORTATION

| DATE | |
|---|---|
| FED PIN NO: | |
| PIN NO: 16123.50 | |

LICENSED ARCHITECT TERRY P. ROOKARD No. 3380 STATE OF MAINE

| PROJECT INFORMATION | |
|---|---|
| PROGRAM | - |
| PROJECT MANAGER | WPP |
| DESIGNER | TV |
| CONSULTANT | ALLIED ENGINEERING |
| PROJECT RESIDENT | - |
| CONTRACTOR | - |
| PROJECT COMPLETION DATE | - |

SIGNATURE
TERRY P. ROOKARD
ARCH. LIC. NUMBER
3380
DATE MAY 1, 2009

MAINE DEPARTMENT OF TRANSPORTATION
ACADIA GATEWAY FACILITY
BUS MAINTENANCE FACILITY

STAIR 02 DETAILS

© COPYRIGHT 2009 ALLIED ENGINEERING, INC.

SHEET NUMBER
A5.06
OF

Filename: - Division: - Date: - Username: -

J:\PROJECTS\3700-Trenton\CAD\A\Sheet\A5.06.dwg Aug 04, 2009 - 12:32pm

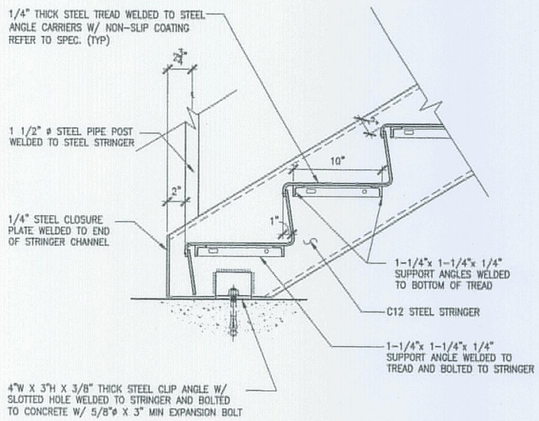


16 A5.07 METAIL STAIR BOTTOM DETAIL
1 1/2" = 1'-0"

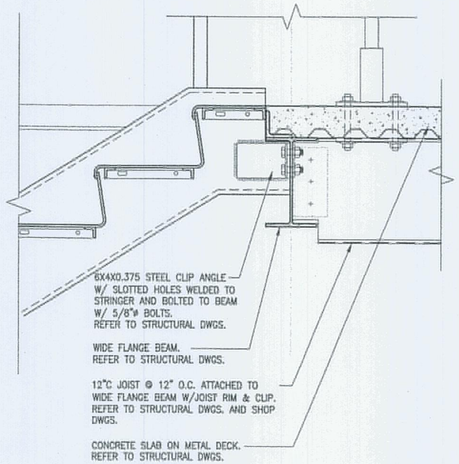


17 A5.07 METAL STAIR TOP DETAIL
1 1/2" = 1'-0"

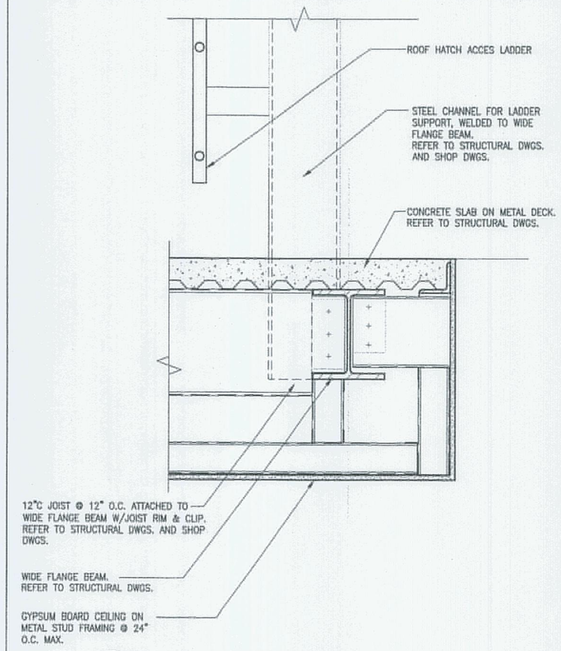


18 A5.07 CEILING/SOFFIT DETAIL
1 1/2" = 1'-0"

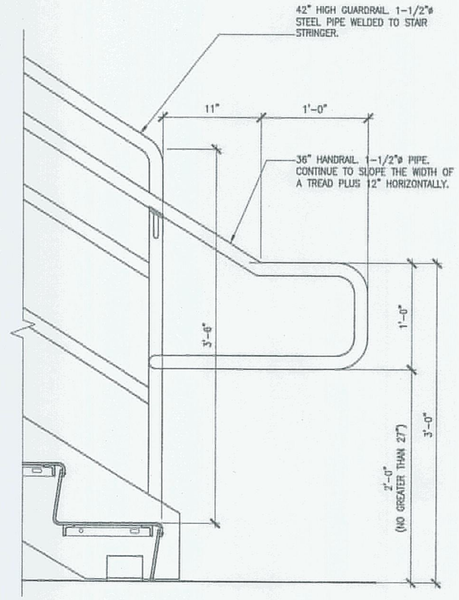


19 A5.07 HANDRAIL EXTENSION @ BOTTOM OF RUN
1 1/2" = 1'-0"

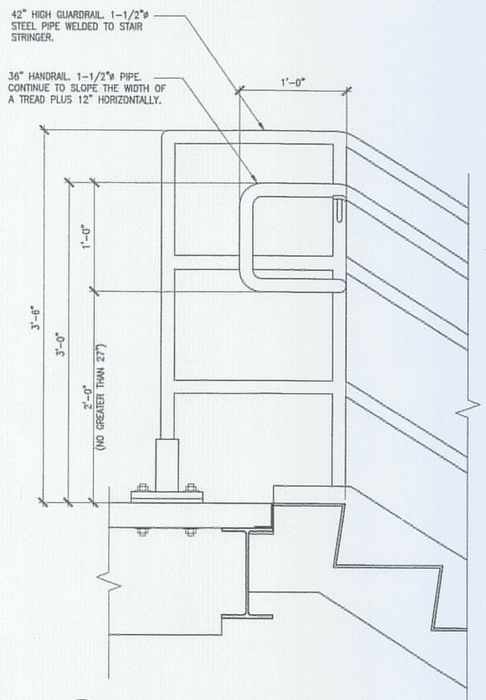


20 A5.07 HANDRAIL EXTENSION @ TOP OF RUN
1 1/2" = 1'-0"

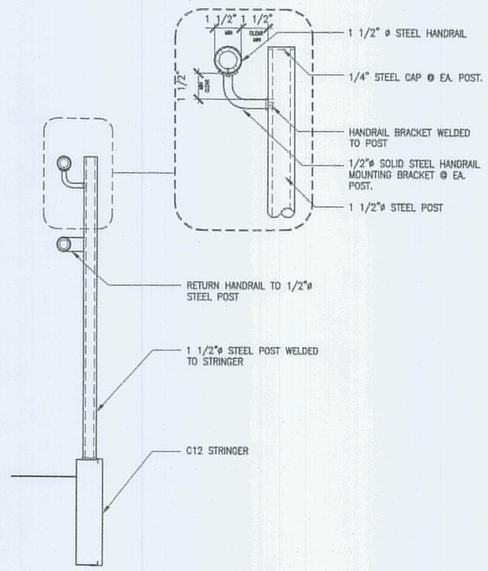


21 A5.07 HANDRAIL DETAIL
HALF SCALE

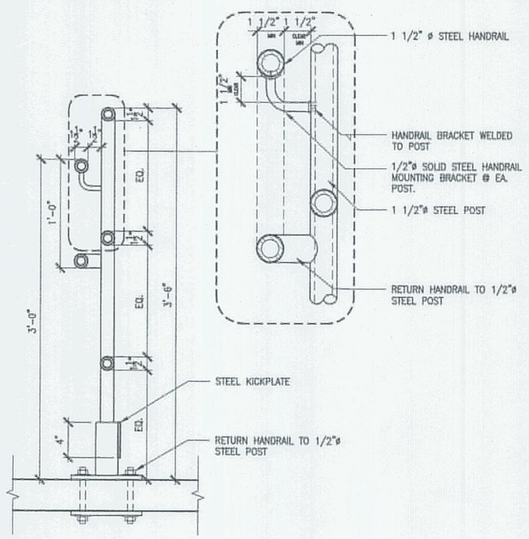


22 A5.07 GUARDRAIL / HANDRAIL DETAIL
1 1/2" = 1'-0"


AECOM USA, Inc.
68 Long Wharf
Boston, MA
T 617.723.1700 F 617.723.6856
AECOM
www.aecom.com

Allied Engineering
160 Veranda Street
Portland, Maine 04103
T: 207.221.3260
F: 207.221.3266
Web: www.allied-eng.com


Allied Project No: 07010
Cad File: A5.07.dwg

STATE OF MAINE
DEPARTMENT OF TRANSPORTATION

| | DATE |
|---|---|
| | |
| FED PIN NO: | |
| PIN NO: 16123.50 | |

LICENSED ARCHITECT TERRY P. ROOKARD No. 3360 STATE OF MAINE

| PROJECT INFORMATION | |
|---|---|
| PROGRAM | - |
| PROJECT MANAGER | WFP |
| DESIGNER | TV |
| CONSULTANT | ALLIED ENGINEERING |
| PROJECT RESIDENT | - |
| CONTRACTOR | - |
| PROJECT COMPLETION DATE | - |

SIGNATURE
TERRY P. ROOKARD
ARCH. LIN. NUMBER
3360
DATE MAY 1, 2009

MAINE DEPARTMENT OF TRANSPORTATION
ACADIA GATEWAY FACILITY
BUS MAINTENANCE FACILITY

STAIR 03 DETAILS

© COPYRIGHT 2007 ALLIED ENGINEERING, INC.

SHEET NUMBER
A5.07
OF

Filename:- Date:- Division:- Username:-
J:\PROJECTS\3700-Trenton\CAD\A\Sheet\A5.07.dwg Aug 04, 2009 - 12:33pm

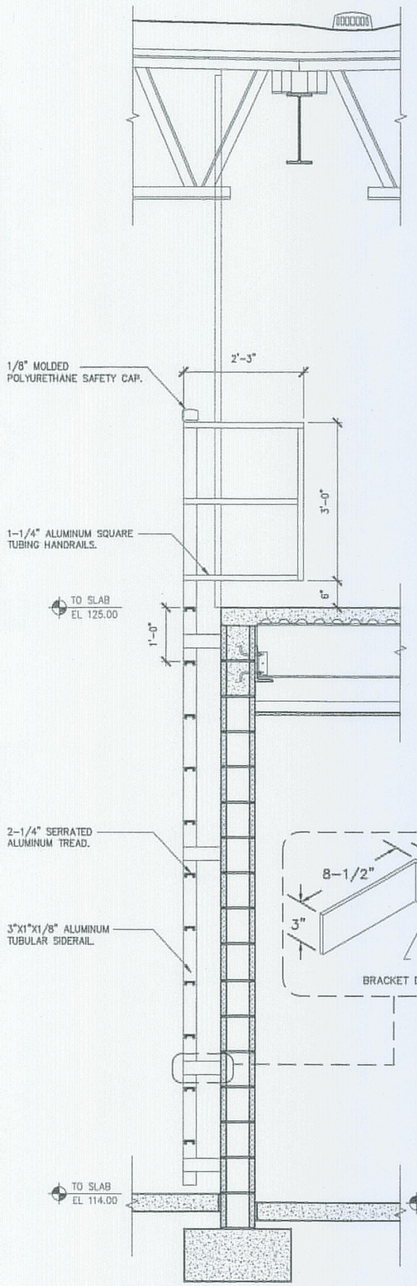


23 A5.08 FIXED LADDER DETAIL
3/4" = 1'-0"

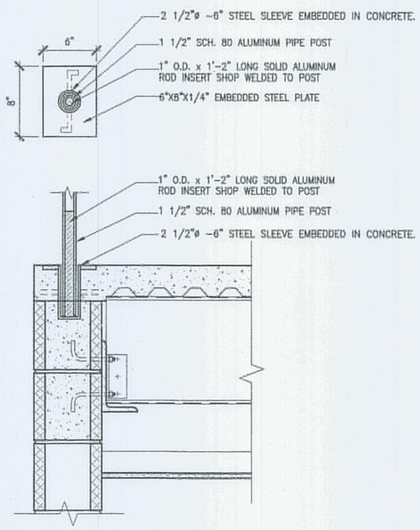


24 A5.08 REMOVABLE RAILING DETAIL
1 1/2" = 1'-0"

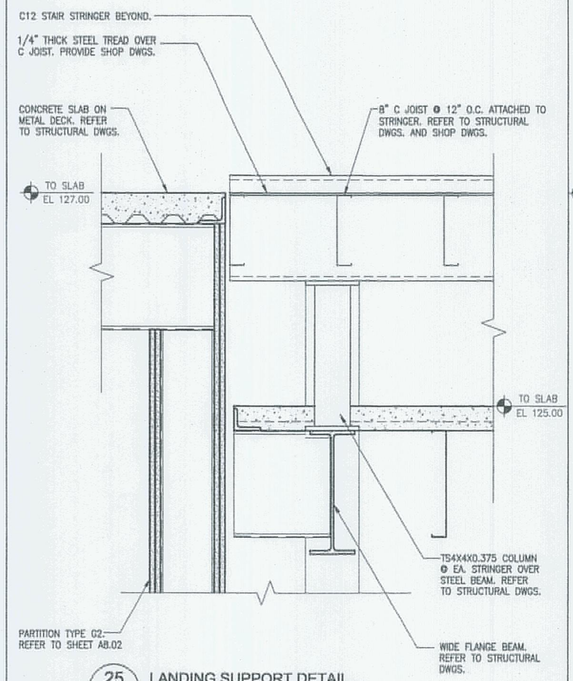


25 A5.08 LANDING SUPPORT DETAIL
1 1/2" = 1'-0"

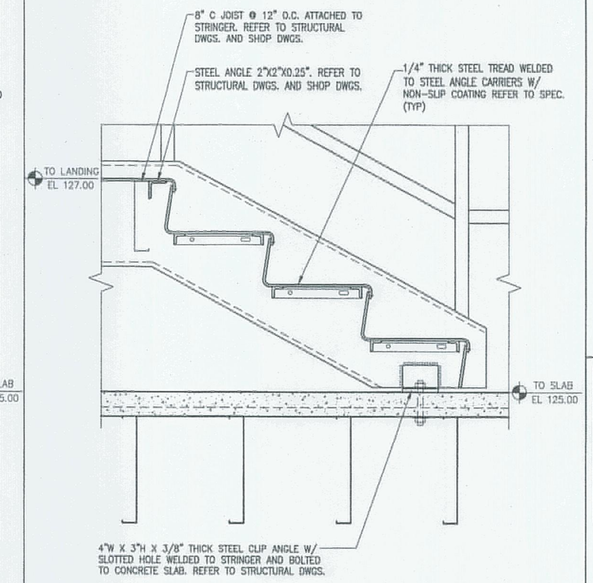


26 A5.08 METAL STAIR BOTTOM DETAIL
1 1/2" = 1'-0"

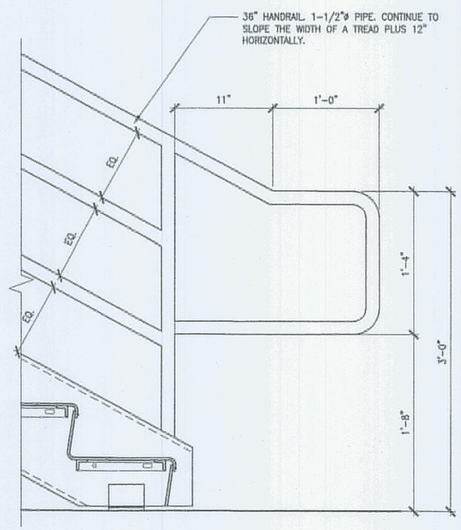


27 A5.08 HANDRAIL EXTENSION @ BOTTOM OF RUN
1 1/2" = 1'-0"

STATE OF MAINE
DEPARTMENT OF TRANSPORTATION

| | DATE |
|---|---|
| | |
| FED PIN NO: | |
| PIN NO: 16123.50 | |

LICENSED ARCHITECT TERRY P. ROOKARD No. 3360 STATE OF MAINE

SIGNATURE
TERRY P. ROOKARD
ARCH. LIC. NUMBER
3360
DATE MAY 1, 2009

| PROJECT INFORMATION | | |
|---|---|---|
| PROGRAM | - | |
| PROJECT MANAGER | WFF | |
| DESIGNER | TV | |
| CONSULTANT | ALLIED ENGINEERING | |
| PROJECT RESIDENT | - | |
| CONTRACTOR | - | |
| PROJECT COMPLETION DATE | - | DATE |

MAINE DEPARTMENT OF TRANSPORTATION
ACADIA GATEWAY FACILITY
BUS MAINTENANCE FACILITY

STAIR 04 DETAILS

© COPYRIGHT 2007 ALLIED ENGINEERING, INC.

SHEET NUMBER
A5.08
OF

AECOM USA, Inc.
66 Long Wharf
Boston, MA
T 617.723.1700 F 617.723.6856

AECOM
www.aecom.com

Allied Engineering
160 Veranda Street
Portland, Maine 04103
T: 207.221.2260
F: 207.221.2266
Web: www.allied-eng.com

Allied Project No: 07010
Cad File: A5.08.dwg

Filename: - Date: - Division: - Username: -
J:\PROJECTS\3700-Trenton\CAD\A\Sheet\A5.08.dwg Aug 04, 2009 - 12:33pm

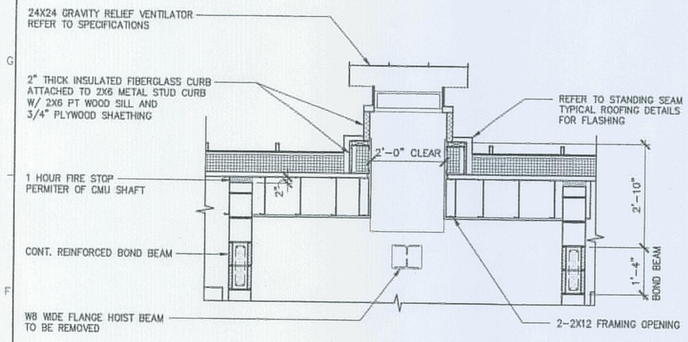


8 LOUVER SECTION 02
1/2"=1'-0"

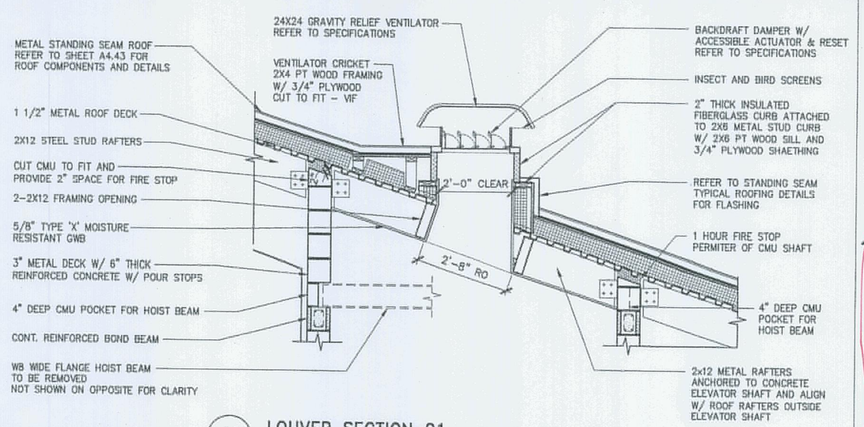


7 LOUVER SECTION 01
1/2"=1'-0"

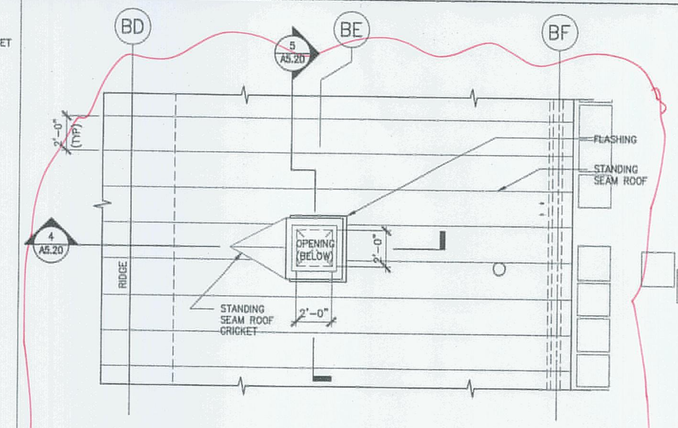


3 ELEVATOR ROOF PLAN
1/4"=1'-0"

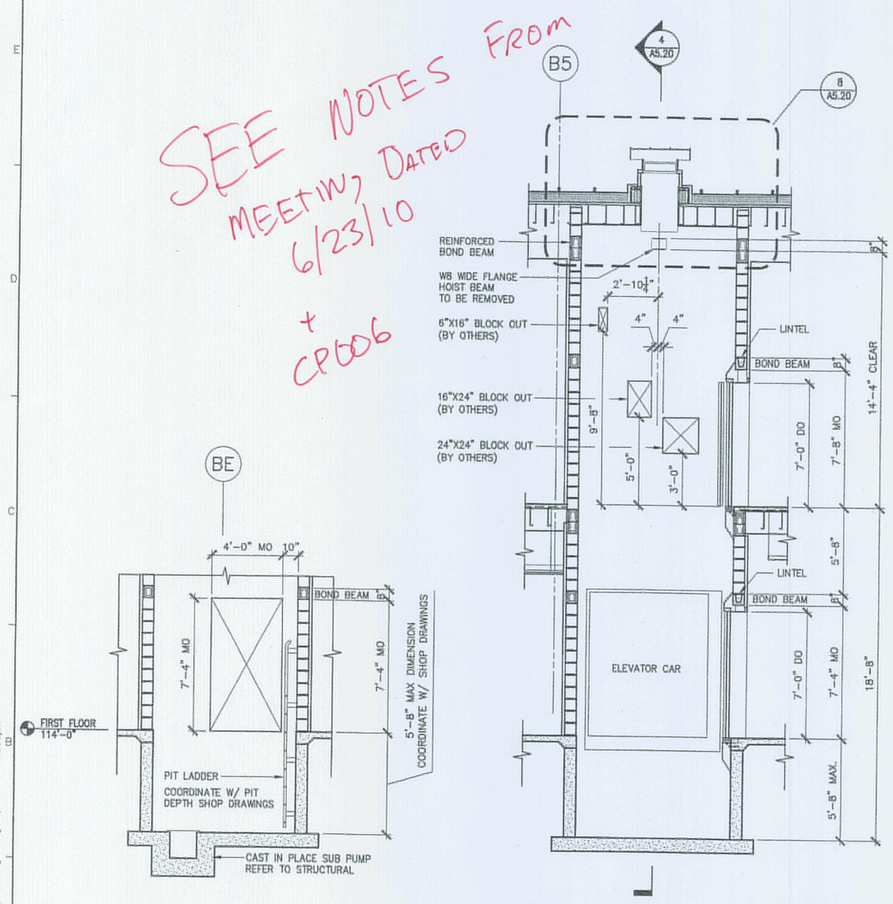


6 ELEVATOR - SECTION 03
1/4"=1'-0"

5 ELEVATOR - SECTION 02
1/4"=1'-0"

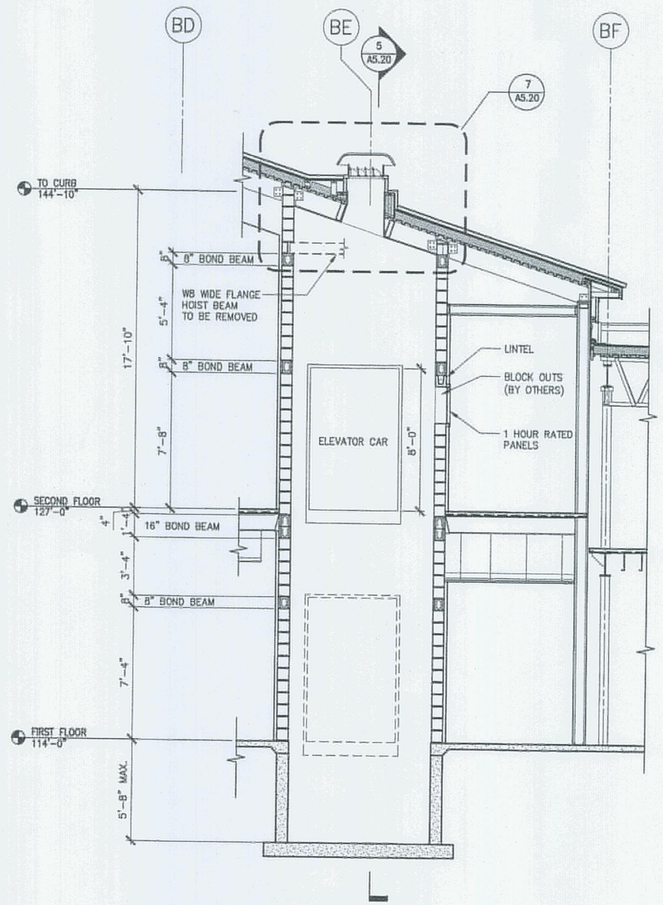


4 ELEVATOR - SECTION 01
1/4"=1'-0"

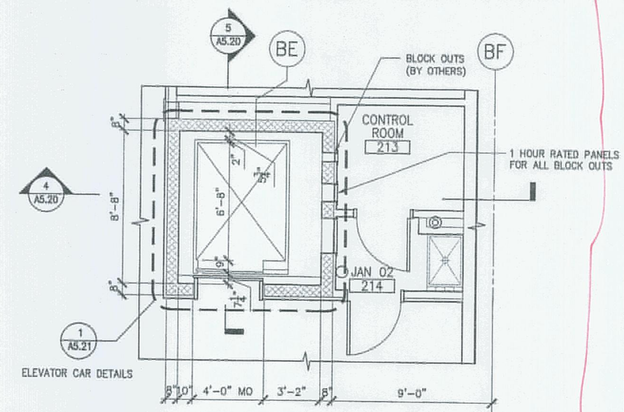


2 ELEVATOR SECOND FLOOR PLAN
1/4"=1'-0"

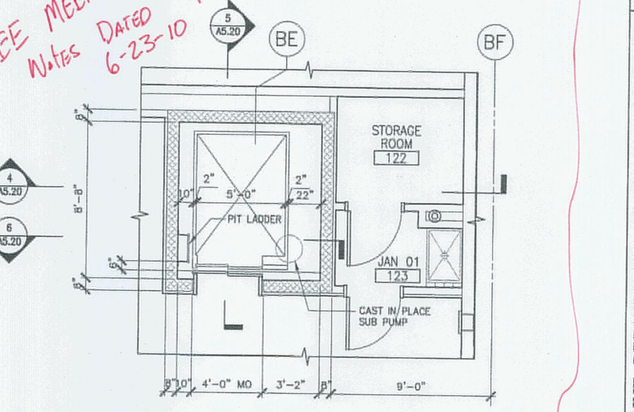


1 ELEVATOR FIRST FLOOR PLAN
1/4"=1'-0"

SEE NOTES FROM MEETING DATED 6/23/10 + CP006

SEE MEETING NOTES DATED 6-23-10 + CP 006

NOTE: COORDINATE ALL EQUIPMENT LOCATIONS AND OPENINGS W/ ELEVATOR MANUFACTURER'S APPROVED SHOP DRAWING REQUIREMENTS.
ALL ELEVATOR DIMENSIONS SHALL BE ADJUSTED AS REQUIRED TO MATCH ELEVATOR MANUFACTURER'S APPROVED SHOP DRAWING REQUIREMENTS.

STATE OF MAINE
DEPARTMENT OF TRANSPORTATION

DATE

FED PIN NO:
PIN NO: 16123.50

LICENSED ARCHITECT TERRY P. ROOKARD No. 5360 STATE OF MAINE

SIGNATURE
TERRY P. ROOKARD
ARCH. LIN. NUMBER 5360
DATE MAY 1, 2009

PROJECT INFORMATION

| | |
|---|---|
| PROGRAM | - |
| PROJECT MANAGER | WFF |
| DESIGNER | TV |
| CONSULTANT | ALLIED ENGINEERING |
| PROJECT RESIDENT | - |
| CONTRACTOR | - |
| PROJECT COMPLETION DATE | - |

MAINE DEPARTMENT OF TRANSPORTATION
ACADIA GATEWAY FACILITY
BUS MAINTENANCE FACILITY

ELEVATOR PLANS AND SECTIONS

© COPYRIGHT 2007 ALLIED ENGINEERING, INC.

SHEET NUMBER
A5.20
OF

TRANSPORTATION
AECOM USA, Inc.
66 Long Wharf
Boston, MA
T 617.723.1700 F 617.723.6856
AECOM
www.aecom.com

Allied Engineering
Electrical Mechanical Plumbing & Consultants
160 Veranda Street
Portland, Maine 04103
T: 207.231.2266
F: 207.231.2266
Web: www.allied-eng.com

Allied Project No: 07010
Cad File: A5.20.dwg

Filename: - Date: - Division: - Username: -
J:\PROJECTS\3700-Trenton\CAD\A\Sheet\A5.20.dwg Aug 04, 2009 - 12:33pm