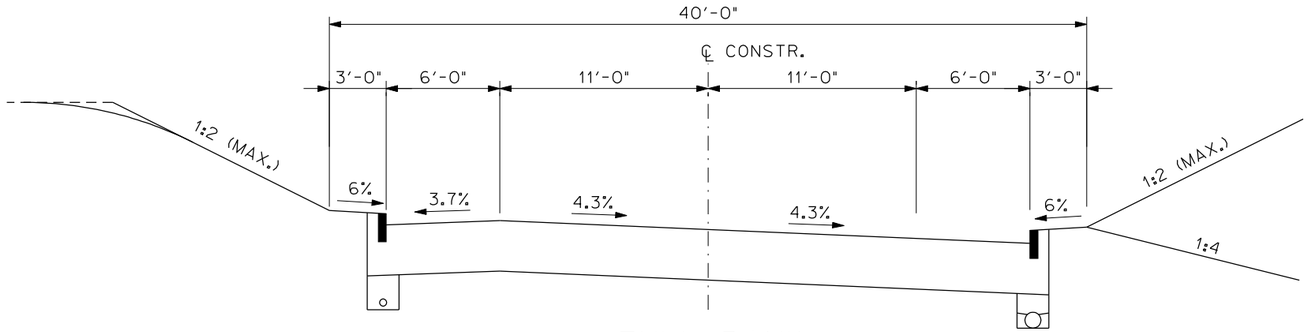

FULL BANK

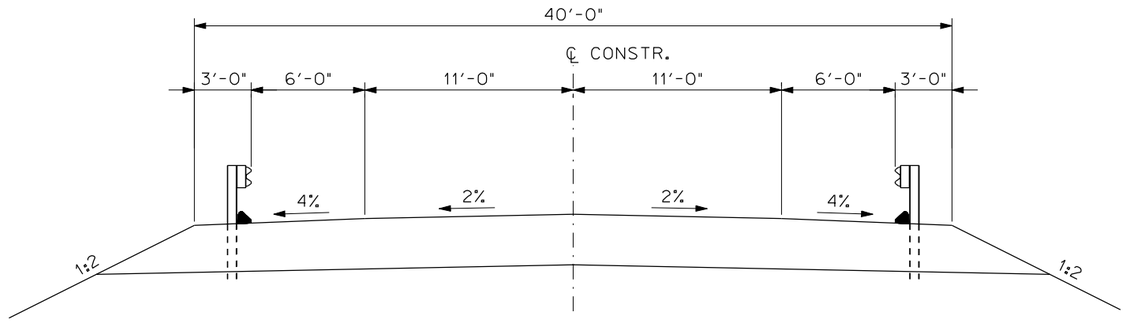

NORMAL CROWN

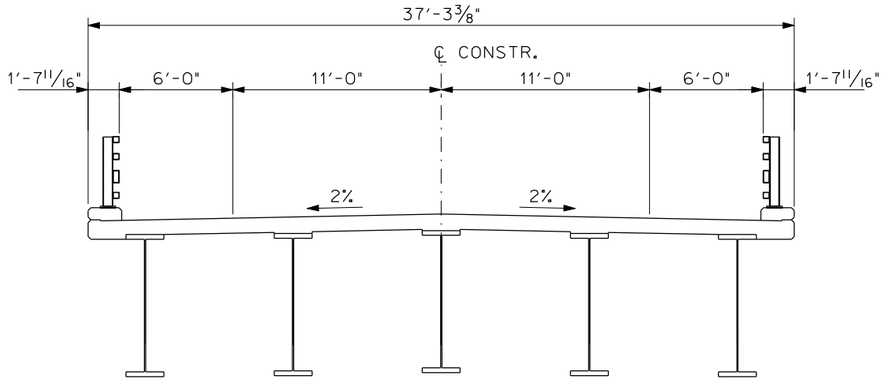

TYPICAL BRIDGE SECTION

NOTE:

SECTIONS TYPICAL FOR HIGH AND LOW PROFILE ALTERNATIVES

Username: ParkerRL Date:10/24/2011

Division: BRIDGE

Filename: ...\tz_sections.dgn

STATE OF MAINE
DEPARTMENT OF TRANSPORTATION

PIN

PROJ. MANAGER	B. Foster	BY	DATE
DESIGN-DETAILED	S. Percossi	T. Davis	
CHECKED-REVIEWED			
DESIGN2-DETAILED2			
DESIGN3-DETAILED3			
REVISIONS 1			
REVISIONS 2			
REVISIONS 3			
REVISIONS 4			
FIELD CHANGES			

SIGNATURE

P.E. NUMBER

DATE

RICHMOND & DRESDEN
MAINE-KENNEBEC BRIDGE

TYPICAL SECTIONS

SHEET NUMBER

1

1 OF 15

Filename: ...\High alt\high-prop-dwgs.dgn Division: BRIDGE Username: ParkerRL Date:10/24/2011

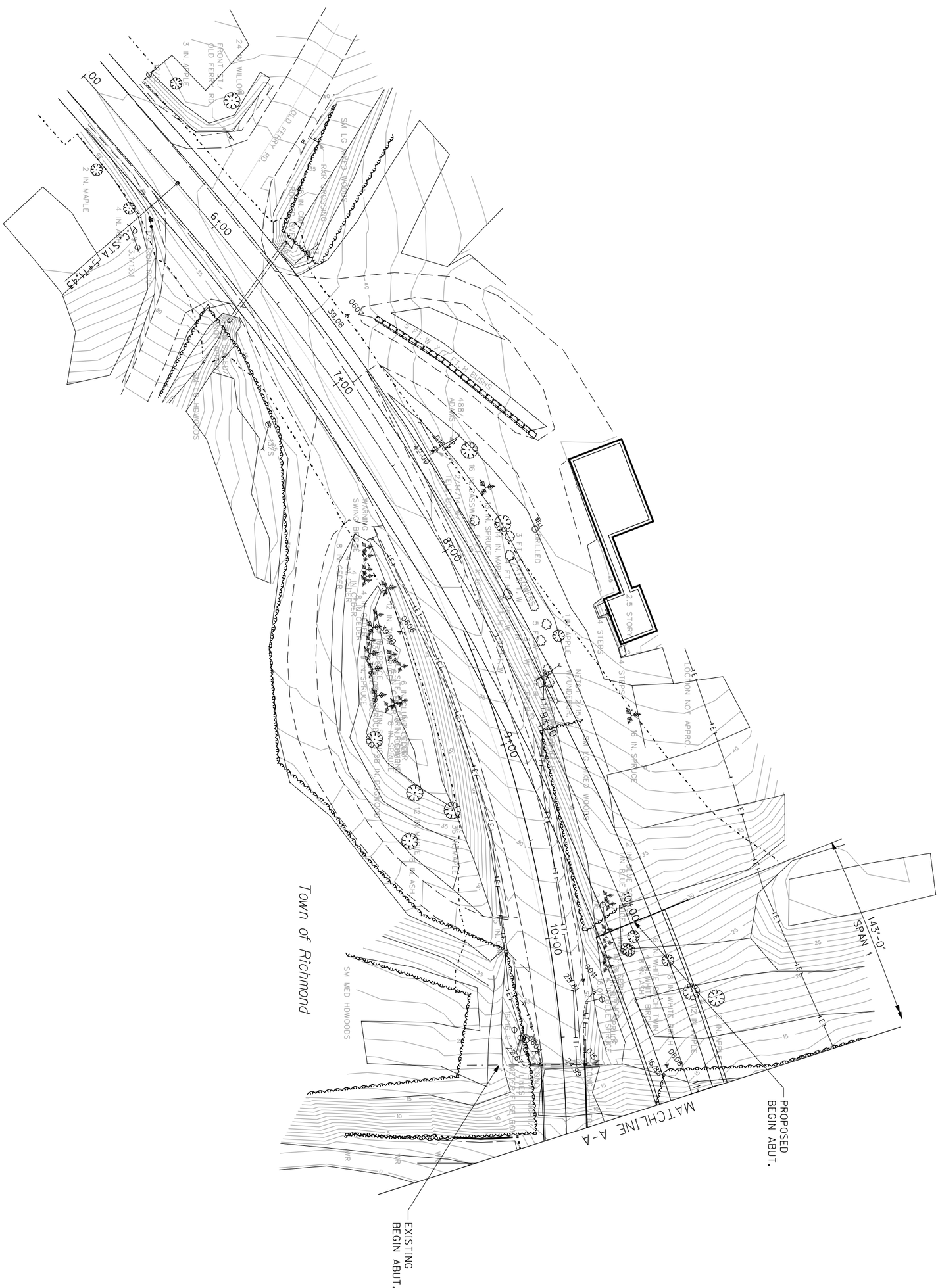

SHEET NUMBER 2	RICHMOND & DRESDEN MAINE-KENNEBEC BRIDGE	PROJ. MANAGER	B. Foster	BY	DATE
2 OF 15	HIGH ALTERNATIVE PLAN	DESIGN-DETAILED	S. Percassi	T. Davis	
		CHECKED-REVIEWED			SIGNATURE
		DESIGN2-DETAILED2			
		DESIGN3-DETAILED3			P.E. NUMBER
		REVISIONS 1			
		REVISIONS 2			DATE
		REVISIONS 3			
		REVISIONS 4			
		FIELD CHANGES			

STATE OF MAINE
DEPARTMENT OF TRANSPORTATION

PIN

Filename: ...\High alt\high-prop-dwgs2.dgn Division: BRIDGE Username: ParkerRL Date:10/24/2011

143'-0" SPAN 1

143'-0" SPAN 2

143'-0" SPAN 3

191'-0" SPAN 4

238'-0" SPAN 5

℄ EXP. JOINT

℄ EXIST. CHANNEL

Kennebec River

FLOW

SM LG HDWOODS

HIGH TIDE MARK

2 LIGHTS/1 PLUG IN

6'-0" Shoulder

2 Lanes @ 11'-0" = 22'-0"

6'-0" Shoulder

37'-4" Out-To-Out

12+00 13+00 14+00 15+00 16+00 17+00

P.T. STA 15+03.96

MATCHLINE A-A

MATCHLINE B-B

℄ Pier 1

℄ Pier 2

℄ Pier 3

℄ Pier 4

℄ Pier 5

℄ Pier 6

0605

0.29

STEEL

Existing Structure

88'-2⅛"

202'-0½"

202'-6⅜"

176'-4¼"

STATE OF MAINE
DEPARTMENT OF TRANSPORTATION

PIN

SIGNATURE

P.E. NUMBER

DATE

PROJ. MANAGER	B. Foster	BY	DATE
DESIGN-DETAILED	S. Percossi	T. Davis	
CHECKED-REVIEWED			
DESIGN2-DETAILED2			
DESIGN3-DETAILED3			
REVISIONS 1			
REVISIONS 2			
REVISIONS 3			
REVISIONS 4			
FIELD CHANGES			

RICHMOND & DRESDEN
MAINE-KENNEBEC BRIDGE

HIGH ALTERNATIVE PLAN

SHEET NUMBER

3

3 OF 15

Filename: ...\High alt\high-prop-dwgs3.dgn Division: BRIDGE Username: ParkerRL Date:10/24/2011

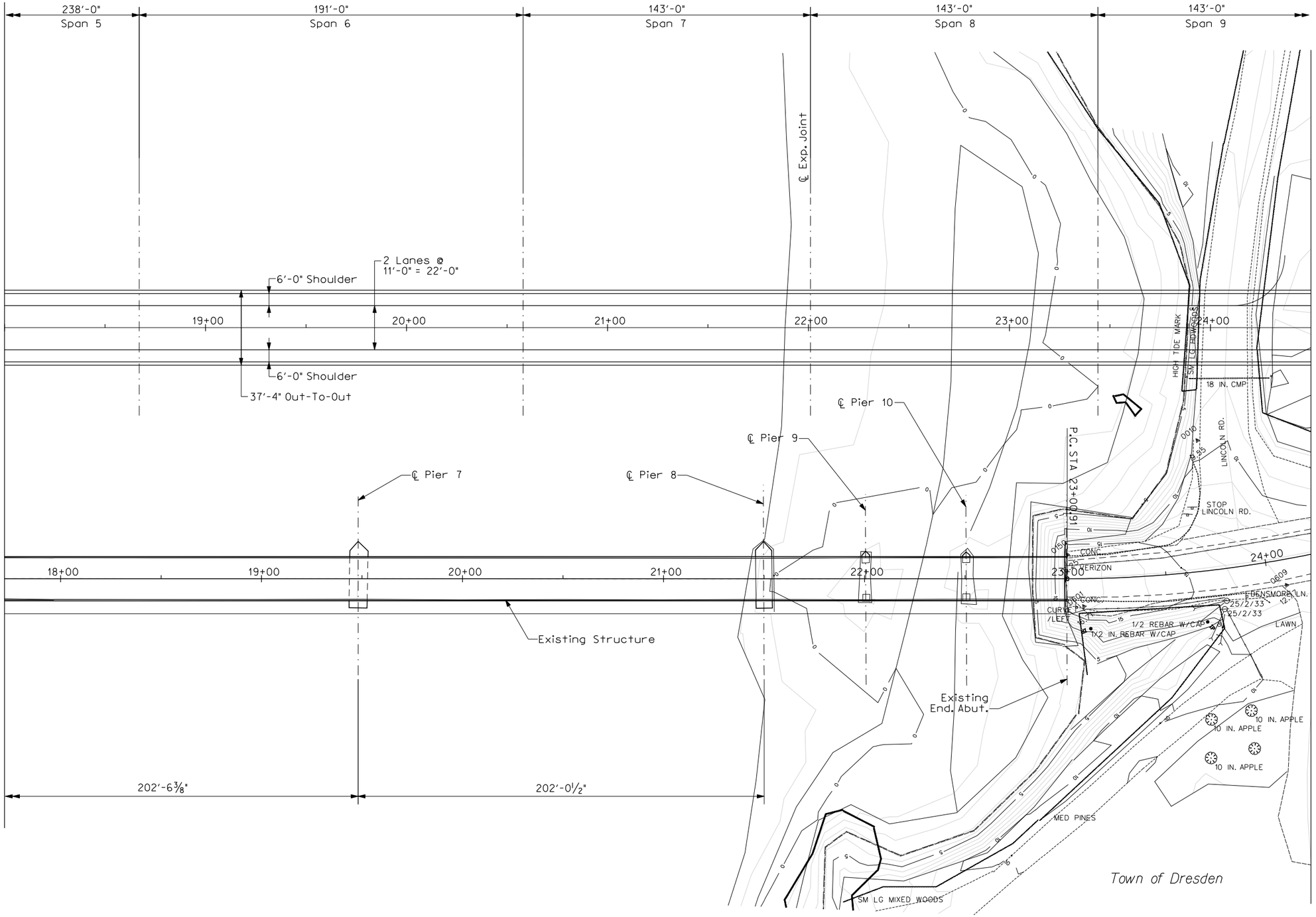

STATE OF MAINE
DEPARTMENT OF TRANSPORTATION

PIN

SIGNATURE

P.E. NUMBER

DATE

	BY	DATE
PROJ. MANAGER	B. Foster	
DESIGN-DETAILED	S. Perossi	
CHECKED-REVIEWED	T. Davis	
DESIGN2-DETAILED2		
DESIGN3-DETAILED3		
REVISIONS 1		
REVISIONS 2		
REVISIONS 3		
REVISIONS 4		
FIELD CHANGES		

RICHMOND & DRESDEN
MAINE-KENNEBEC BRIDGE

HIGH ALTERNATIVE PLAN

SHEET NUMBER

4

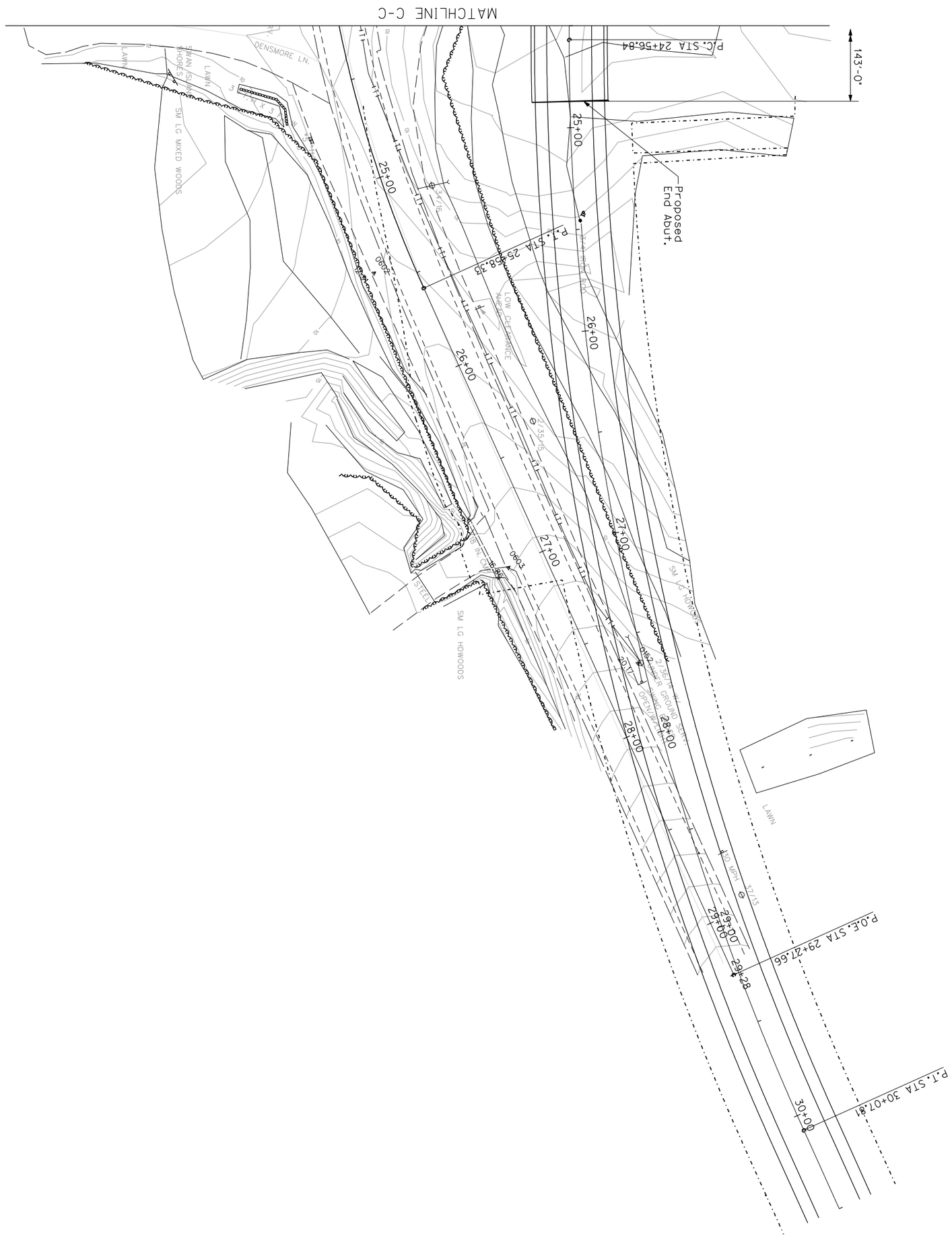

5 OF 15	SHEET NUMBER 5	RICHMOND & DRESDEN MAINE-KENNEBEC BRIDGE	PROJ. MANAGER	B. Foster	BY / DATE
			DESIGN-DETAILED	S. Percossi	T. Davis
			CHECKED-REVIEWED		
			DESIGN2-DETAILED2		
			DESIGN3-DETAILED3		
			REVISIONS 1		
			REVISIONS 2		
			REVISIONS 3		
			REVISIONS 4		
			FIELD CHANGES		
		HIGH ALTERNATIVE PLAN	SIGNATURE		
			P.E. NUMBER		
			DATE		
			STATE OF MAINE DEPARTMENT OF TRANSPORTATION		
			PIN		

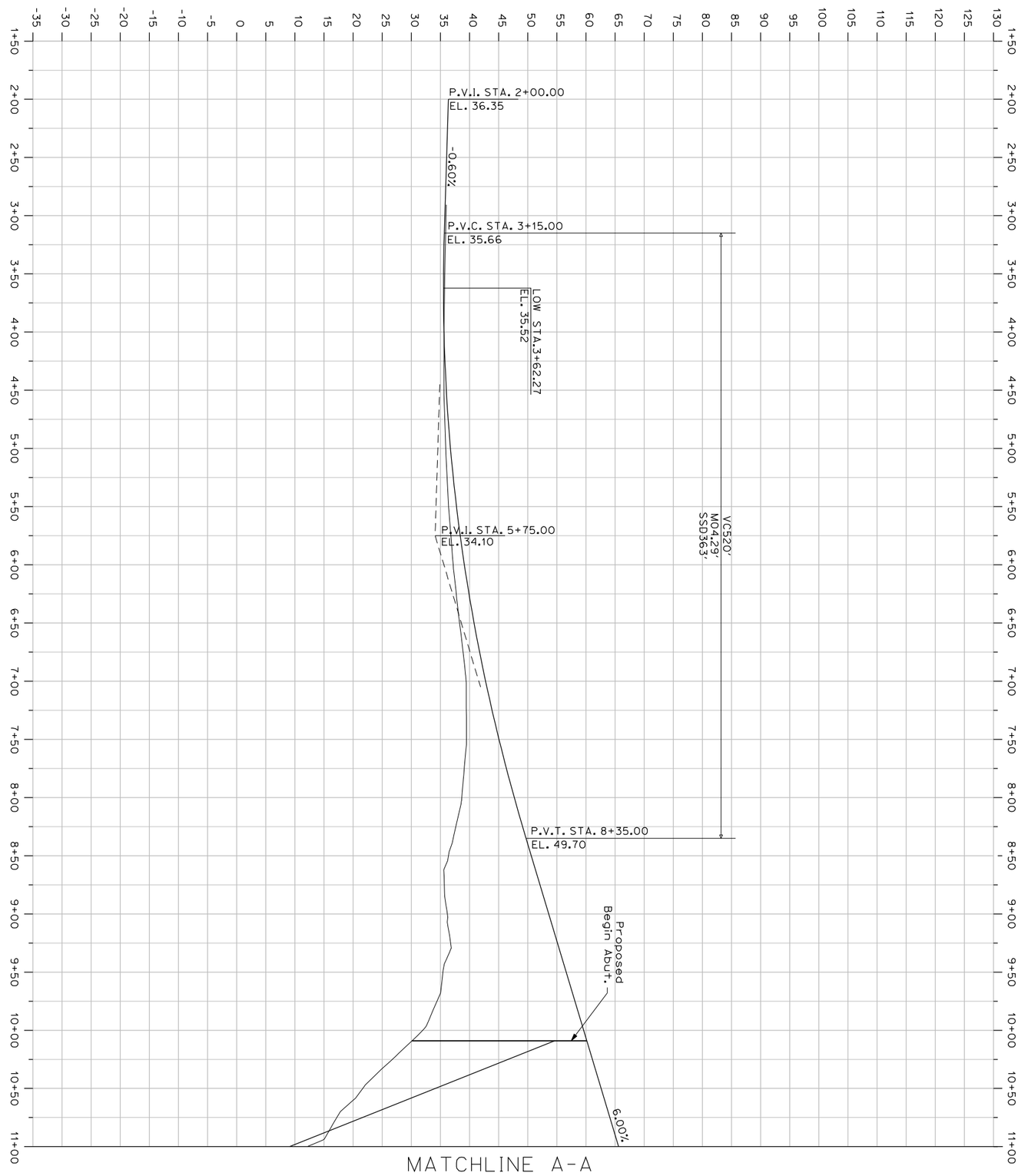

SHEET NUMBER 6	RICHMOND & DRESDEN MAINE-KENNEBEC BRIDGE	PROJ. MANAGER	B. Foster	BY	DATE
6 OF 15	HIGH ALTERNATIVE PROFILE	DESIGN-DETAILED	S. Percossi	T. Davis	
		CHECKED-REVIEWED			
		DESIGN2-DETAILED2			
		DESIGN3-DETAILED3			
		REVISIONS 1			
		REVISIONS 2			
		REVISIONS 3			
		REVISIONS 4			
		FIELD CHANGES			

SIGNATURE

P.E. NUMBER

DATE

STATE OF MAINE
DEPARTMENT OF TRANSPORTATION

PIN

Filename: ...\High alt\high-prop-prof2.dgn Division: BRIDGE Username: ParkerRL Date:10/24/2011

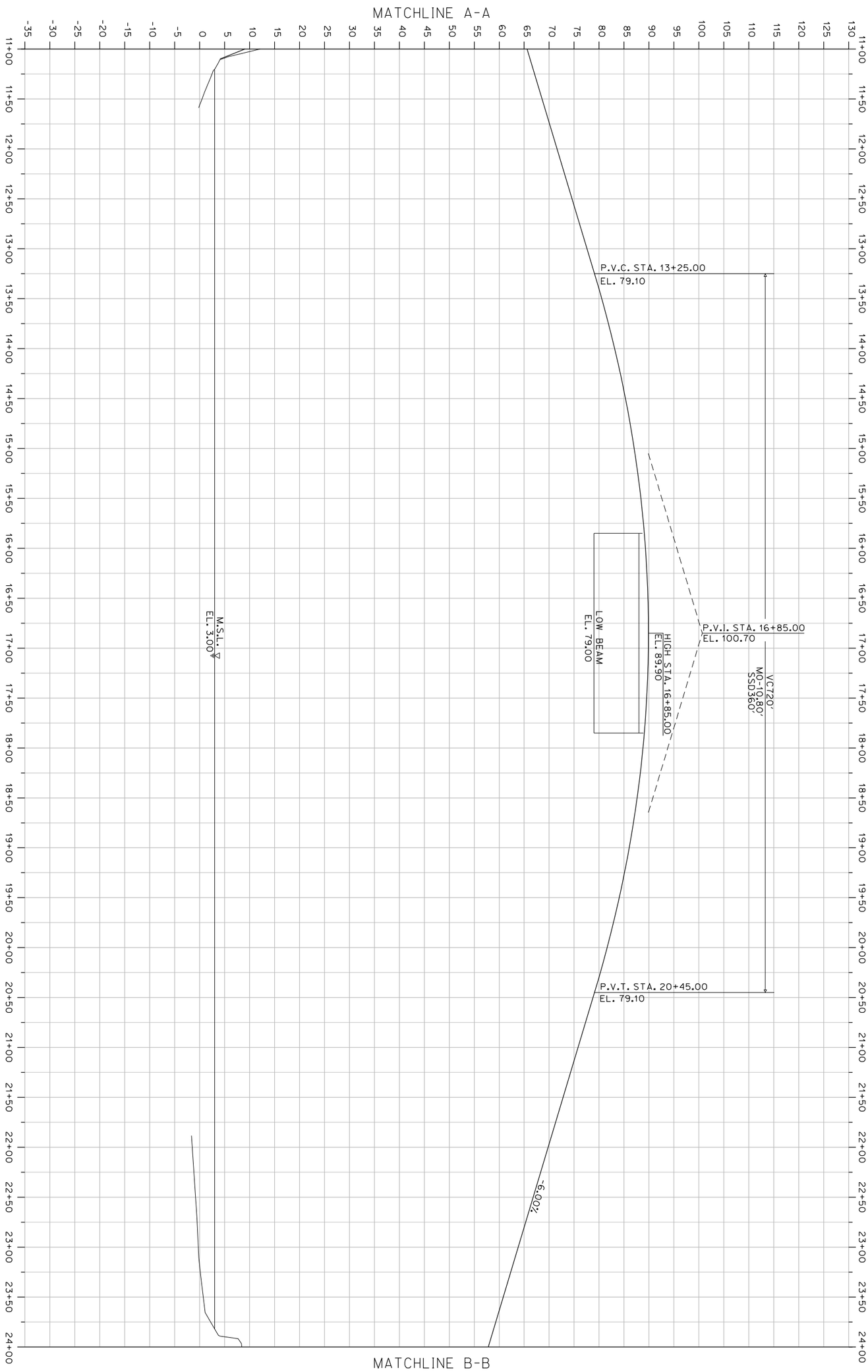

SHEET NUMBER 7	RICHMOND & DRESDEN MAINE-KENNEBEC BRIDGE	PROJ. MANAGER	B. Foster	BY	DATE
7 OF 15	HIGH ALTERNATIVE PROFILE	DESIGN-DETAILED	S. Percossi	T. Davis	
		CHECKED-REVIEWED			
		DESIGN2-DETAILED2			
		DESIGN3-DETAILED3			
		REVISIONS 1			
		REVISIONS 2			
		REVISIONS 3			
		REVISIONS 4			
		FIELD CHANGES			

SIGNATURE

P.E. NUMBER

DATE

STATE OF MAINE
DEPARTMENT OF TRANSPORTATION

PIN

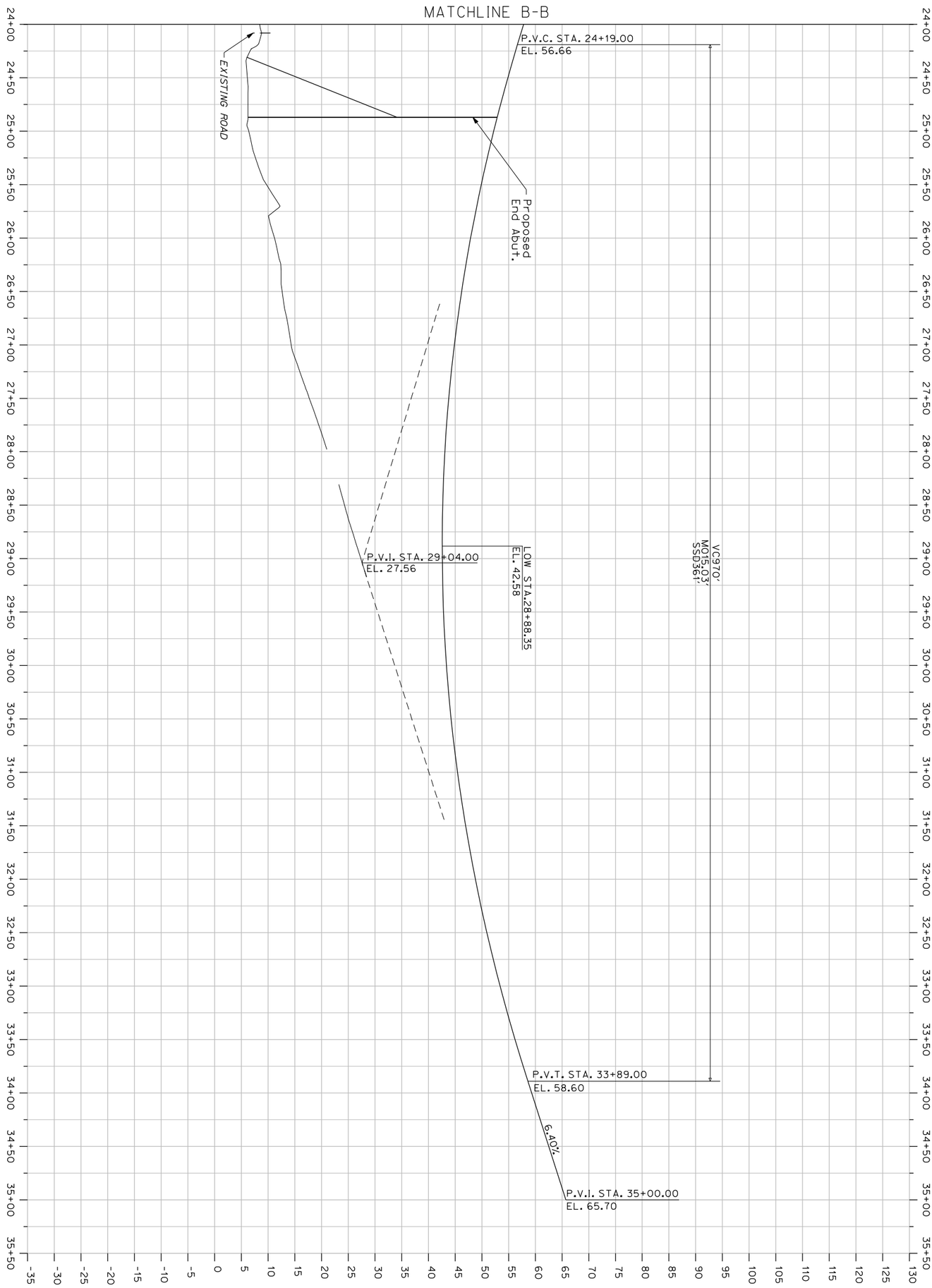

RICHMOND & DRESDEN
MAINE-KENNEBEC BRIDGE

HIGH ALTERNATIVE PROFILE

PROJ. MANAGER	B. Foster	BY	DATE
DESIGN-DETAILED	S. Percossi	T. Davis	
CHECKED-REVIEWED			
DESIGN2-DETAILED2			
DESIGN3-DETAILED3			
REVISIONS 1			
REVISIONS 2			
REVISIONS 3			
REVISIONS 4			
FIELD CHANGES			

SIGNATURE

P.E. NUMBER

DATE

STATE OF MAINE
DEPARTMENT OF TRANSPORTATION

PIN

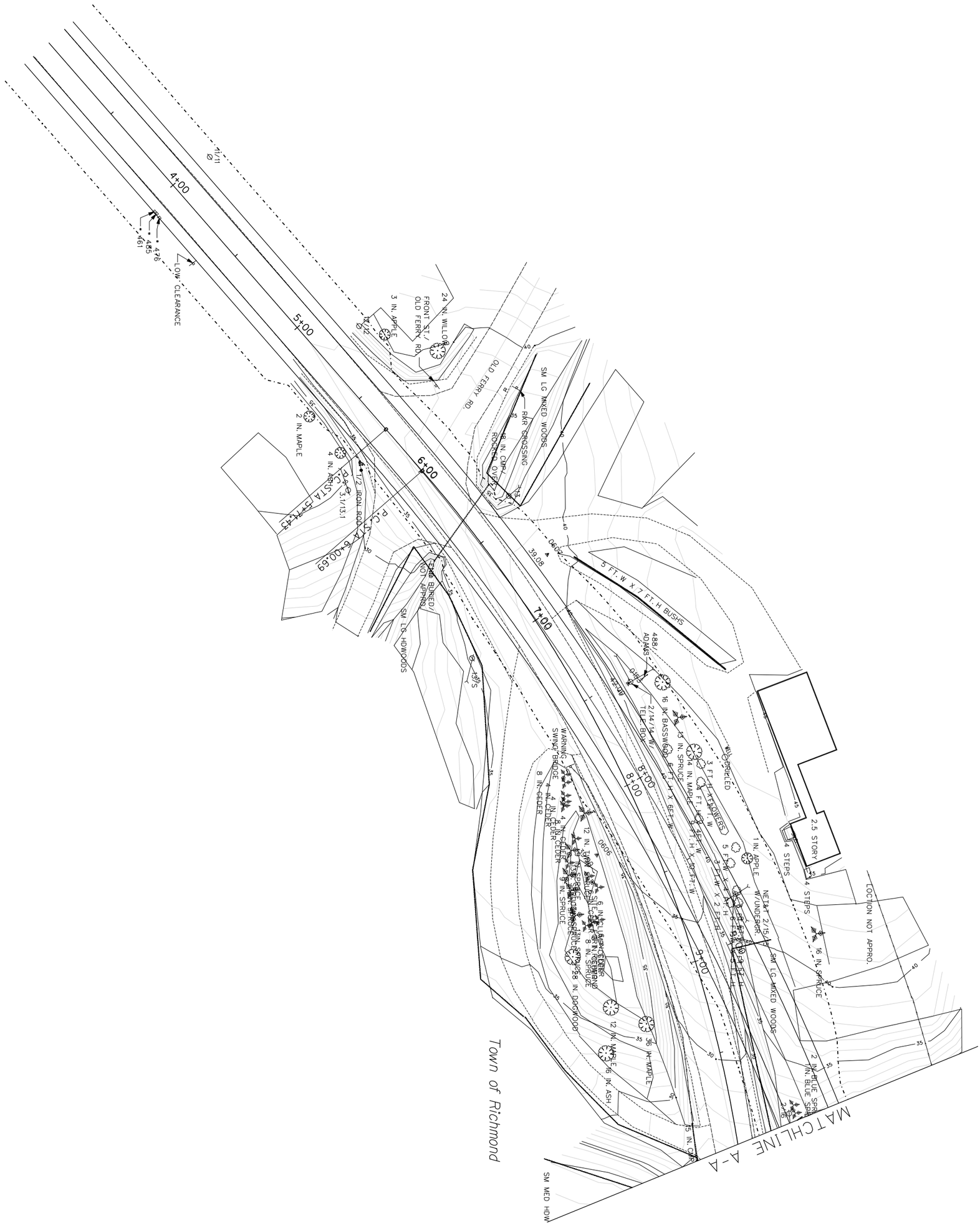

SHEET NUMBER 9	RICHMOND & DRESDEN MAINE-KENNEBEC BRIDGE	STATE OF MAINE DEPARTMENT OF TRANSPORTATION	
9 OF 15	LOW ALTERNATIVE PLAN	PIN	

PROJ. MANAGER	B. Foster	BY	DATE
DESIGN-DETAILED	S. Percossi	T. Davis	
CHECKED-REVIEWED			
DESIGN2-DETAILED2			
DESIGN3-DETAILED3			
REVISIONS 1			
REVISIONS 2			
REVISIONS 3			
REVISIONS 4			
FIELD CHANGES			

SIGNATURE

P.E. NUMBER

DATE

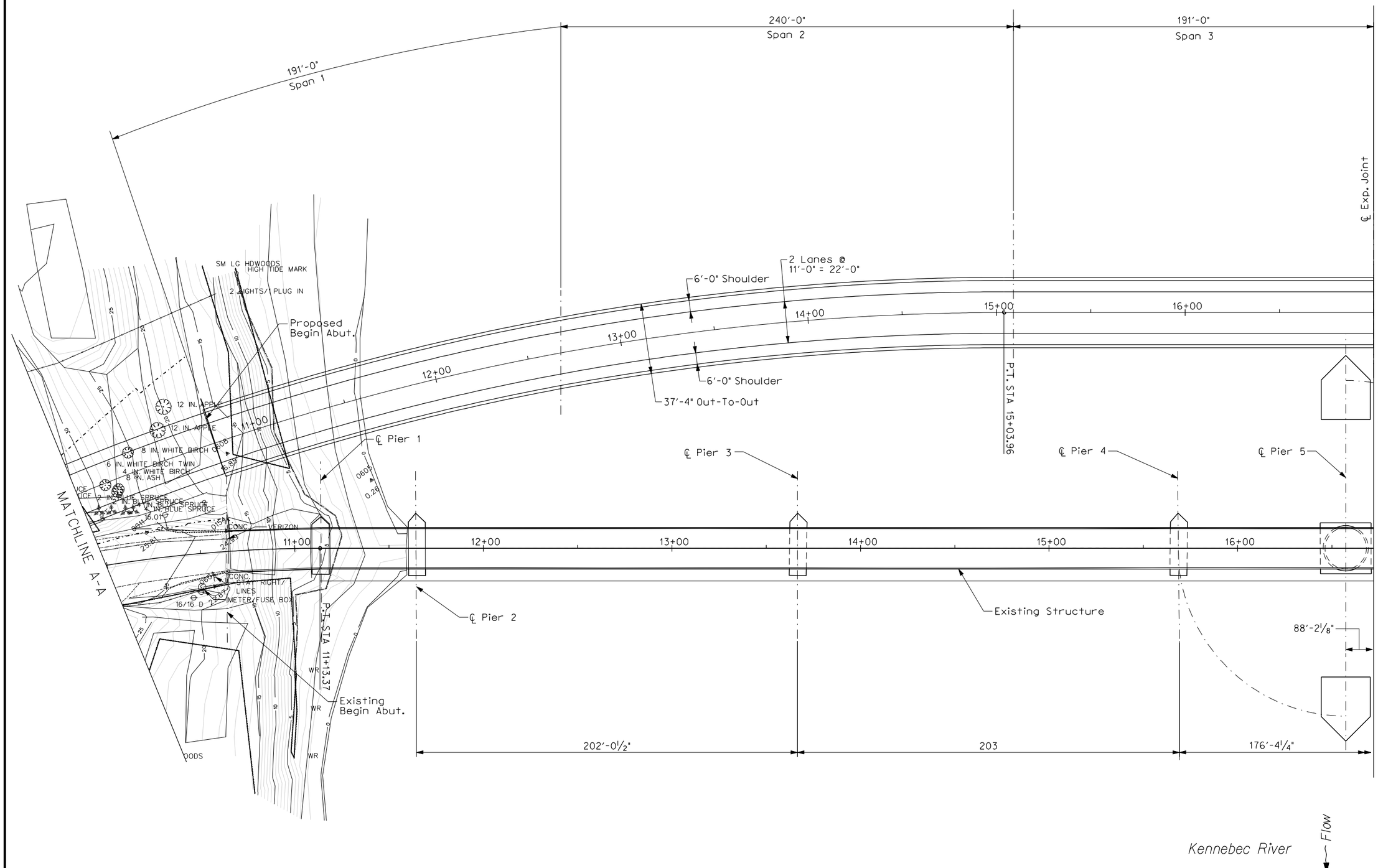

STATE OF MAINE
DEPARTMENT OF TRANSPORTATION

PIN

PROJ. MANAGER	B. Foster	BY	DATE
DESIGN-DETAILED	S. Percassi	T. Davis	
CHECKED-REVIEWED			
DESIGN2-DETAILED2			
DESIGN3-DETAILED3			
REVISIONS 1			
REVISIONS 2			
REVISIONS 3			
REVISIONS 4			
FIELD CHANGES			

SIGNATURE

P.E. NUMBER

DATE

RICHMOND & DRESDEN
MAINE-KENNEBEC BRIDGE

LOW ALTERNATIVE PLAN

SHEET NUMBER

10

10 OF 15

Filename: ...\Low alt\low-prop-plan2.dgn Division: BRIDGE Username: ParkerRL Date:10/24/2011

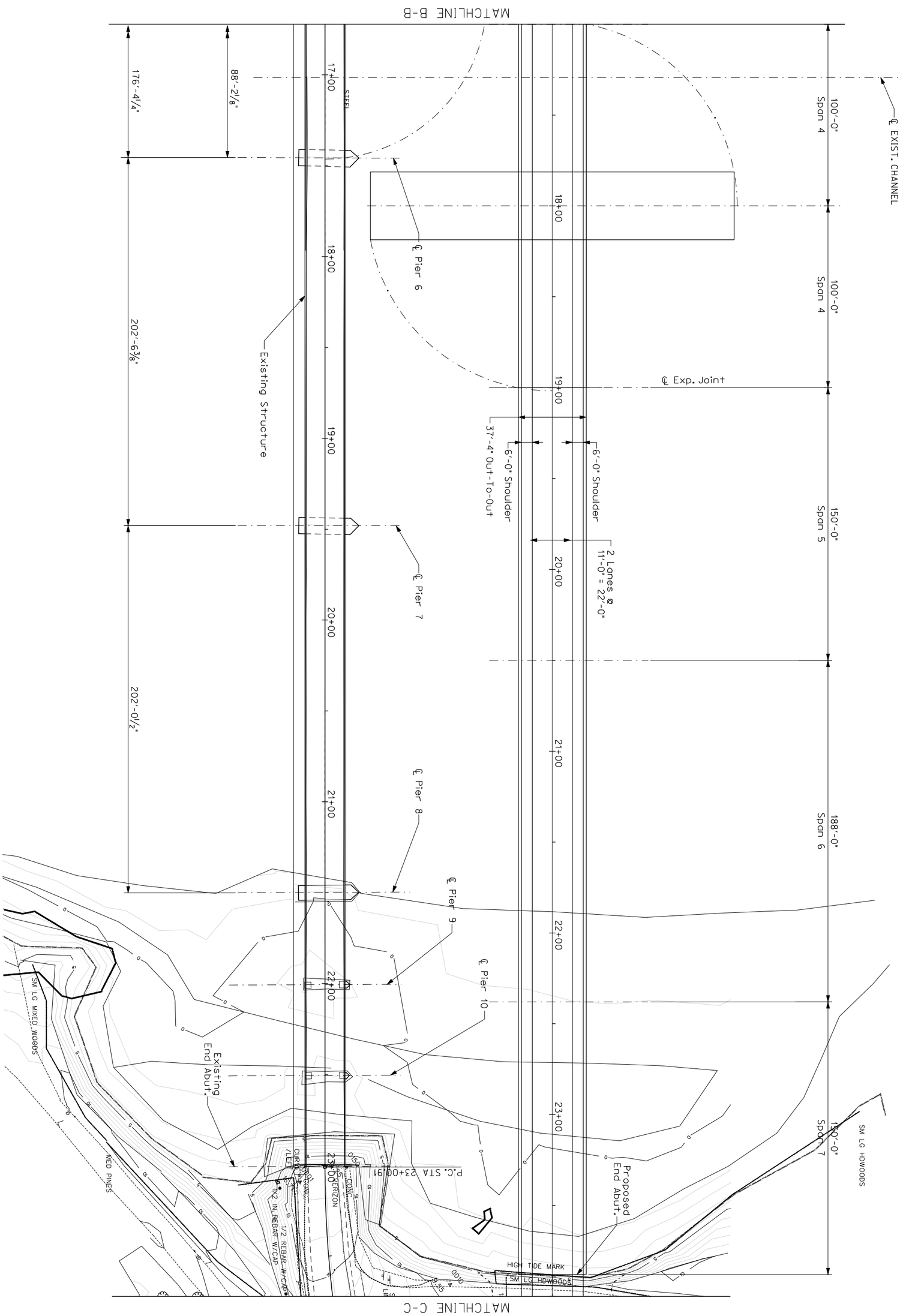

SHEET NUMBER 11	RICHMOND & DRESDEN MAINE-KENNEBEC BRIDGE	PROJ. MANAGER B. Foster / BY / DATE	STATE OF MAINE DEPARTMENT OF TRANSPORTATION
11 OF 15	LOW ALTERNATIVE PLAN	DESIGN-DETAILED S. Percassi / T. Davis CHECKED-REVIEWED DESIGN2-DETAILED2 DESIGN3-DETAILED3 REVISIONS 1 REVISIONS 2 REVISIONS 3 REVISIONS 4 FIELD CHANGES	SIGNATURE P.E. NUMBER DATE
			PIN

Filename: ...\Low alt\low-prop-plan4.dgn Division: BRIDGE Username: ParkerRL Date:10/24/2011

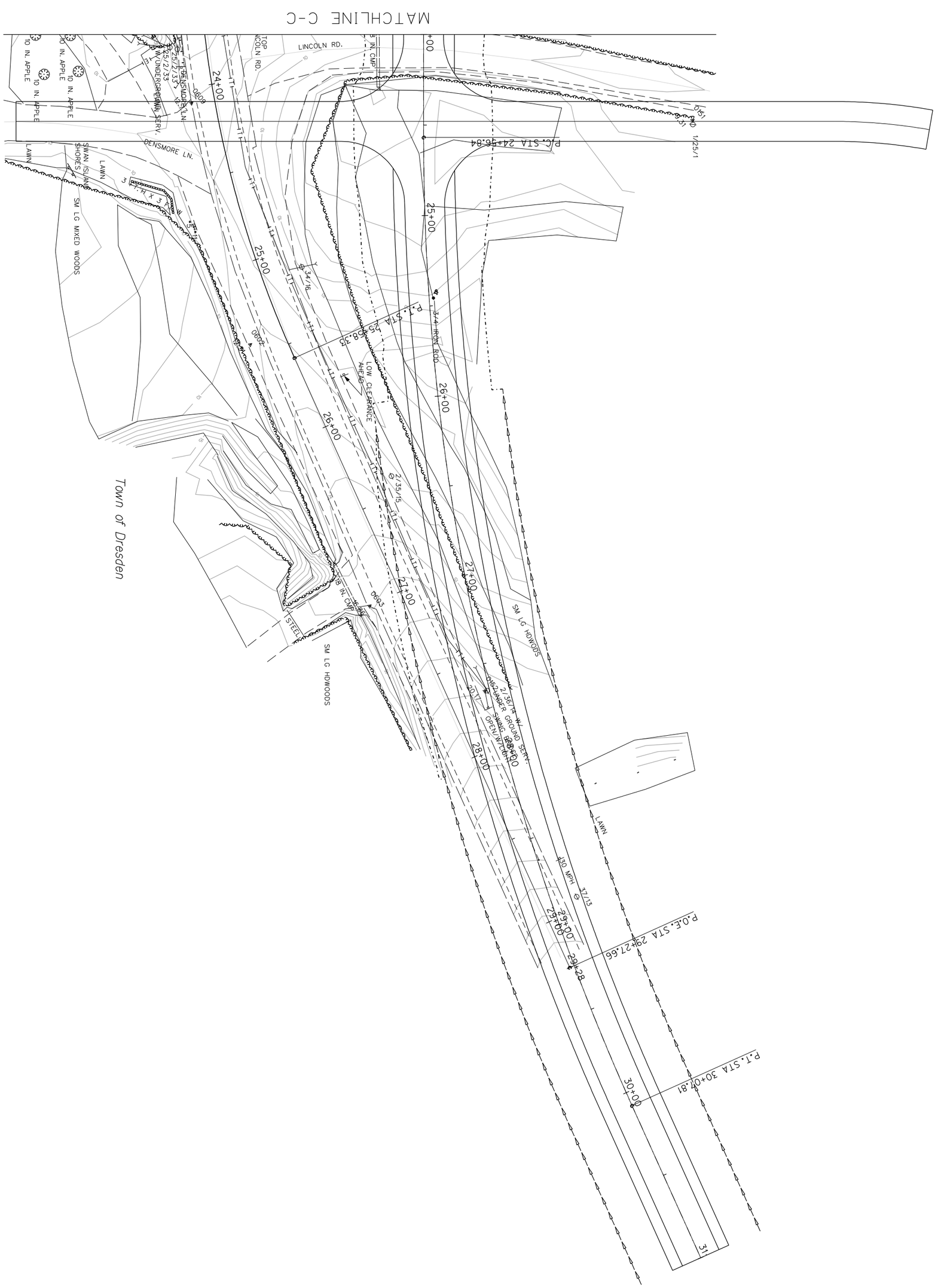

SHEET NUMBER 12	RICHMOND & DRESDEN MAINE-KENNEBEC BRIDGE	PROJ. MANAGER	B. Foster	BY	DATE
12 OF 15	LOW ALTERNATIVE PLAN	DESIGN-DETAILED	S. Percassi	T. Davis	
		CHECKED-REVIEWED			
		DESIGN2-DETAILED2			
		DESIGN3-DETAILED3			
		REVISIONS 1			
		REVISIONS 2			
		REVISIONS 3			
		REVISIONS 4			
		FIELD CHANGES			

SIGNATURE

P.E. NUMBER

DATE

STATE OF MAINE
DEPARTMENT OF TRANSPORTATION

PIN

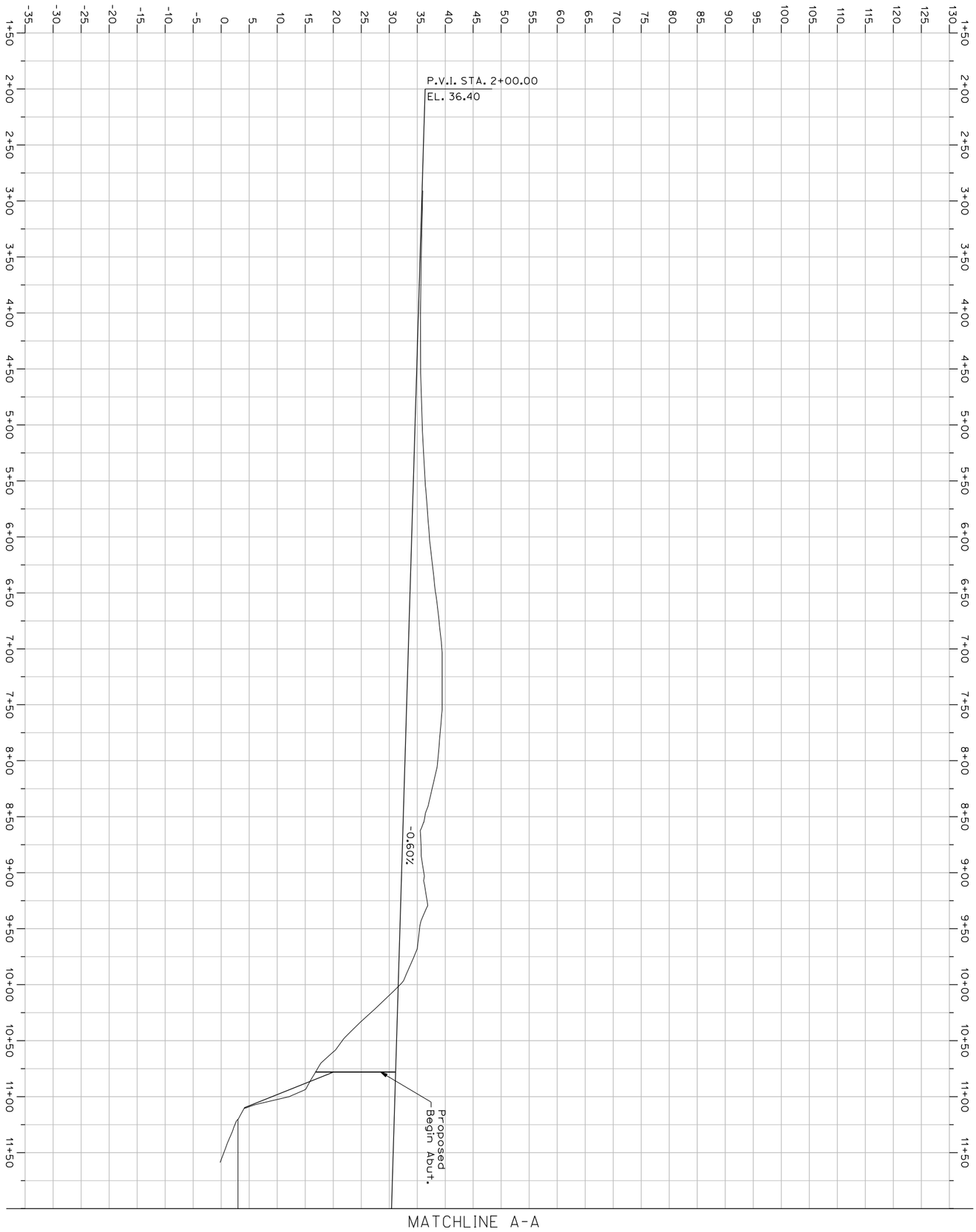

SHEET NUMBER 13	RICHMOND & DRESDEN MAINE-KENNEBEC BRIDGE	PROJ. MANAGER	B. Foster	BY	DATE
13 OF 15		DESIGN-DETAILED	S. Percossi	T. Davis	
		CHECKED-REVIEWED			
		DESIGN2-DETAILED2			
		DESIGN3-DETAILED3			
		REVISIONS 1			
		REVISIONS 2			
		REVISIONS 3			
		REVISIONS 4			
		FIELD CHANGES			

LOW ALTERNATIVE PROFILE

SIGNATURE

P.E. NUMBER

DATE

STATE OF MAINE
DEPARTMENT OF TRANSPORTATION

PIN

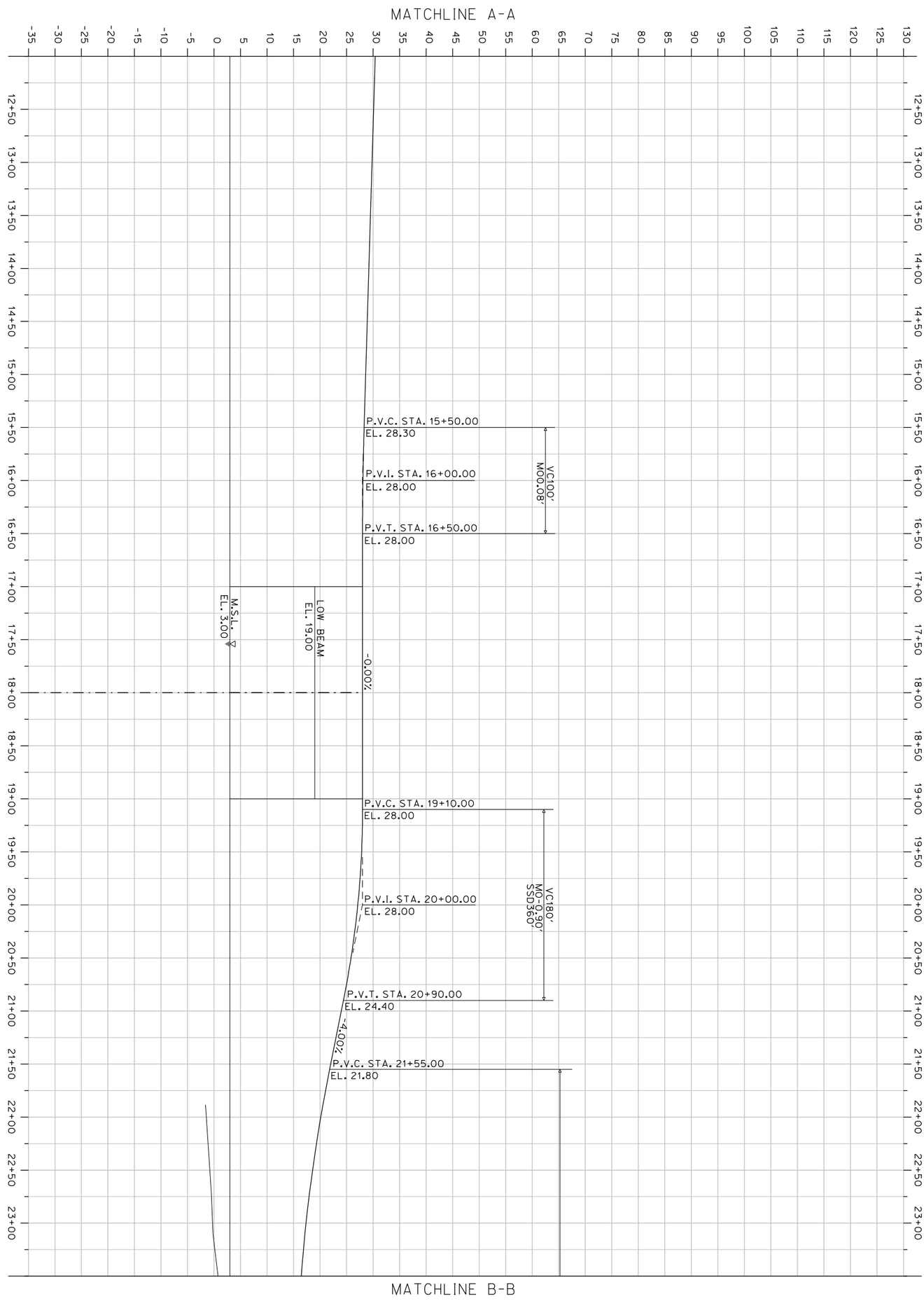

SHEET NUMBER 14	RICHMOND & DRESDEN MAINE-KENNEBEC BRIDGE	PROJ. MANAGER	B. Foster	BY	DATE
14 OF 15	LOW ALTERNATIVE PROFILE	DESIGN-DETAILED	S. Percassi	T. Davis	
		CHECKED-REVIEWED			
		DESIGN2-DETAILED2			
		DESIGN3-DETAILED3			
		REVISIONS 1			
		REVISIONS 2			
		REVISIONS 3			
		REVISIONS 4			
		FIELD CHANGES			

SIGNATURE

P.E. NUMBER

DATE

STATE OF MAINE
DEPARTMENT OF TRANSPORTATION

PIN

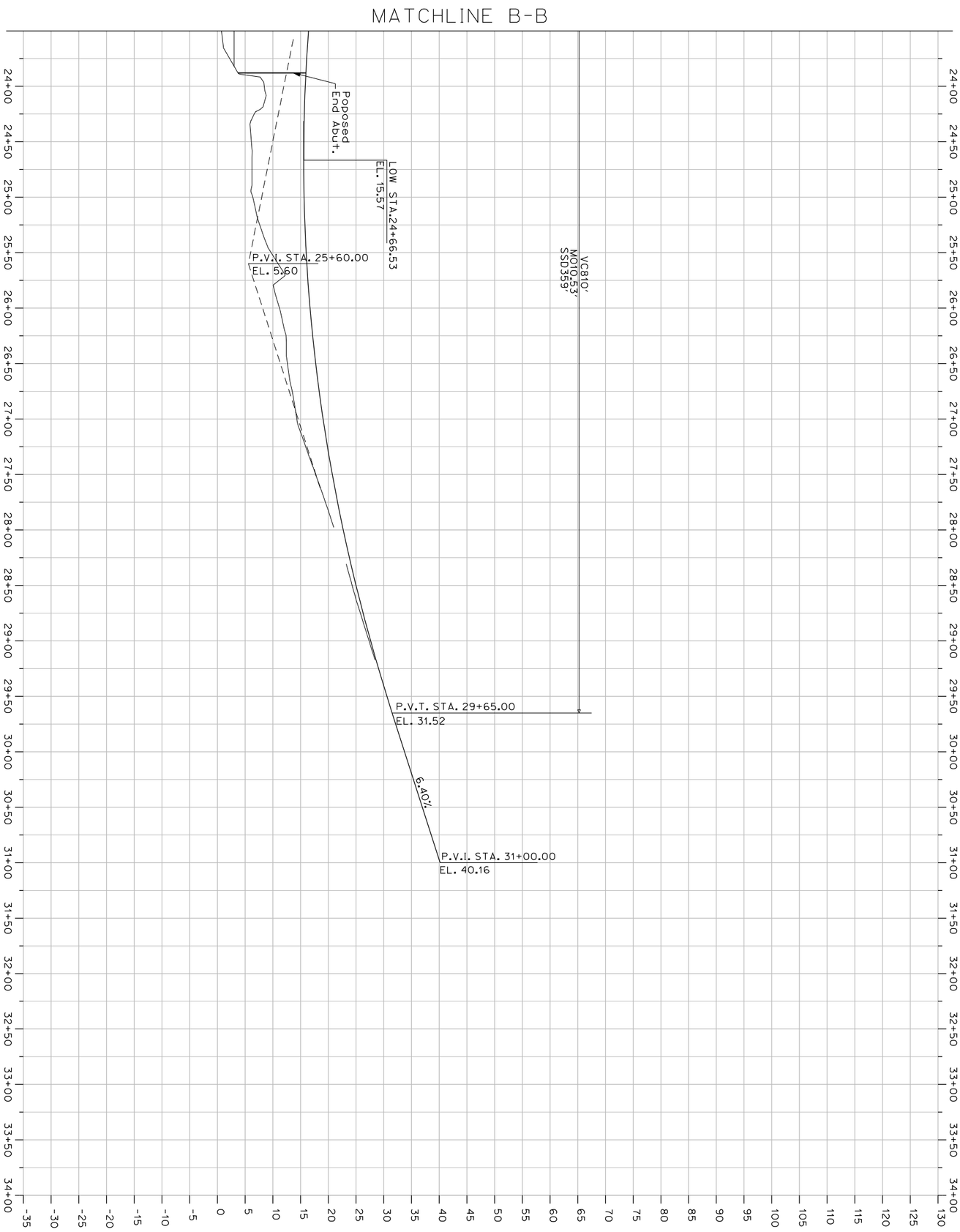

SHEET NUMBER 15	RICHMOND & DRESDEN MAINE-KENNEBEC BRIDGE	PROJ. MANAGER	B. Foster	BY	DATE
15 OF 15	LOW ALTERNATIVE PROFILE	DESIGN-DETAILED	S. Percassi	T. Davis	
		CHECKED-REVIEWED			
		DESIGN2-DETAILED2			
		DESIGN3-DETAILED3			
		REVISIONS 1			
		REVISIONS 2			
		REVISIONS 3			
		REVISIONS 4			
		FIELD CHANGES			

SIGNATURE

P.E. NUMBER

DATE

STATE OF MAINE
DEPARTMENT OF TRANSPORTATION

PIN