STATE OF MAINE
DEPARTMENT OF TRANSPORTATION

KITTERY, ME - PORTSMOUTH, NH
YORK COUNTY - ROCKINGHAM COUNTY
US ROUTE 1A (BYPASS)
OVER
PISCATAQUA RIVER

PROJECT NO. BR-1671 (000)
PROJECT LENGTH 0.79 mi
BRIDGE REPLACEMENT
BRIDGE NO. 3641 (MAINE)
BRIDGE NO. 251 / 108 (NEW HAMPSHIRE)

TRAFFIC DATA

Current (2015) AADT	14040
Future (2035) AADT	16100
DHV - % of AADT	10%
Design Hour Volume	1610
Heavy Trucks (% of AADT)	8%
Heavy Trucks (% of DHV)	8%
Directional Distribution (% of DHV)	51%
18 Kip Equivelent P 2.0	677
18 Kip Equivelent P2.5	645
Design Speed	40 mph

UTILITIES

- Central Maine Power
- Fairpoint Communications
- Kittery Water
- Kittery Sewer
- Public Service of New Hampshire (PSNH)
- City of Portsmouth (Sewer)
- Railroads

MAINTENANCE OF TRAFFIC

Maintain two (2) twelve foot (12') minimum lanes of traffic, one (1) lane in each direction on the existing bridge and approaches during construction of the new bridge until tie-ins at each end are scheduled to occur.

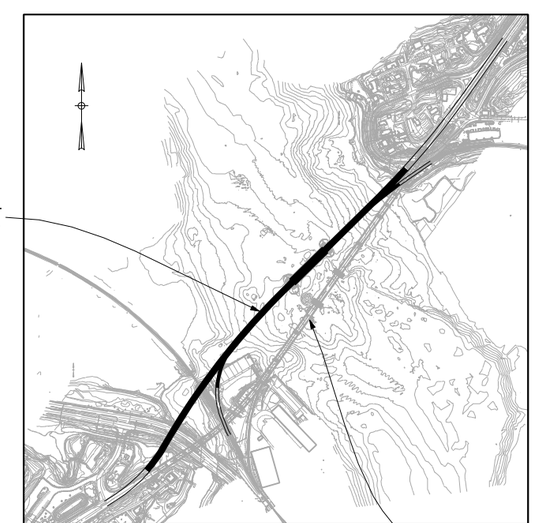

LAYOUT SCALE

500' 0 500' 1000'

SUMMARY OF DRAWINGS

G1-G53	GENERAL PLANS
B1 - B167	APPROACH BRIDGE PLANS
F1-F2	FENDER PLANS
T1-T48	TOWER PLANS
V1-V6	TOWER ACCESS PLANS
S1-S20	LIFT SPAN PLANS
A1-A12	ARCHITECTURAL PLANS
M1-M20	MACHINERY PLANS
E1-E44	ELECTRICAL PLANS
R1-R93	ROADWAY PLANS

PREPARED BY:
FIGG | Hardesty&Hanover Joint Venture

PRELIMINARY - NOT FOR CONSTRUCTION

SARAH MILDRED LONG BRIDGE
PISCATAQUA RIVER
KITTERY, ME PORTSMOUTH, NH

TITLE SHEET

SHEET NUMBER
G1
OF B30

STATE OF MAINE
DEPARTMENT OF TRANSPORTATION
16710.00
PIN 16710.00
ME 3641 NH 251/108
BRIDGE PLANS

SIGNATURE
P.E. NUMBER
DATE

		BY	DATE
PROJ. MANAGER	W.J. ROHLDER		
DESIGN-DETAILED		B. SHEPARD	
CHECKED-REVIEWED			
REVISIONS 1			
REVISIONS 2			
REVISIONS 3			
REVISIONS 4			
REVISIONS 5			
REVISIONS 6			
REVISIONS 7			
REVISIONS 8			

60% PLANS (1-31-2014)
Date:1/31/2014 Username: w.johnson Division: BRIDGE Filename: ...\G-temp\001_Title_Sheet.dgn

60% PLANS (1-31-2014)

Filename: ...\MSTA\012_Bridge_KeyPlan.dgn Division: BRIDGE Username: wjohnson Date:1/31/2014

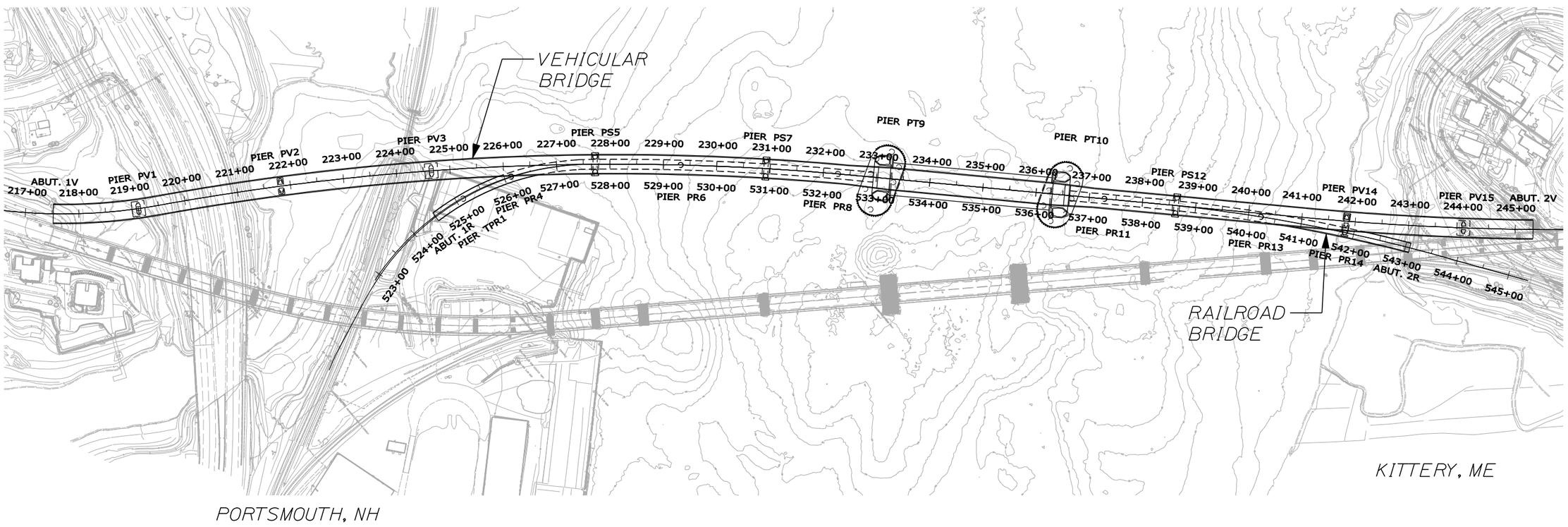

PRELIMINARY - NOT FOR CONSTRUCTION

SARAH MILDRED LONG BRIDGE
PISCATAQUA RIVER
KITTERY, ME PORTSMOUTH, NH

KEY PLAN

		BY	DATE
PROJ. MANAGER	W.J. ROHLDER		
DESIGN-DETAILED		BJ SHEPARD	
CHECKED-REVIEWED			
REVISIONS 1			
REVISIONS 2			
REVISIONS 3			
REVISIONS 4			
REVISIONS 5			
REVISIONS 6			
REVISIONS 7			
REVISIONS 8			

SIGNATURE

P.E. NUMBER

DATE

STATE OF MAINE
DEPARTMENT OF TRANSPORTATION

16710.00

PIN 16710.00

ME 3641 NH 251/108 BRIDGE PLANS

PREPARED BY: FIGG

SHEET NUMBER

G12

OF B167

Filename: ...\MSTA\013_Bridge_GPE_1.dgn Division: BRIDGE Username: wjohnson Date:1/31/2014

60% PLANS (1-31-2014)

PLAN

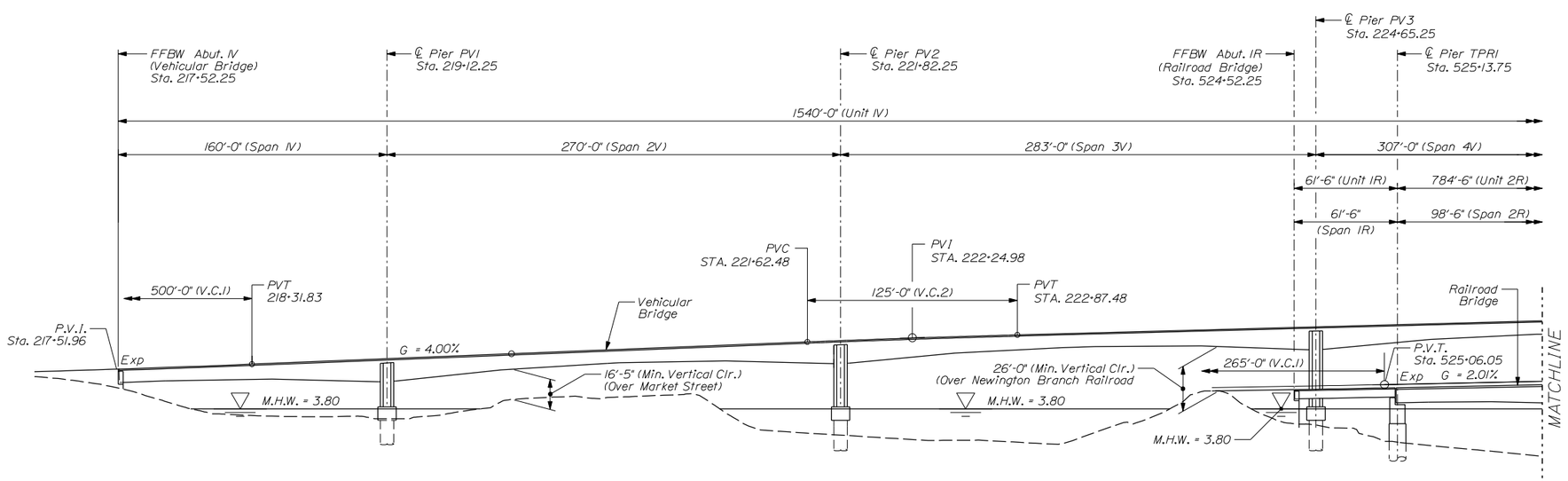

ELEVATION

PRELIMINARY - NOT FOR CONSTRUCTION

PROJ. MANAGER	W.J. ROHLDER	BY	DATE
DESIGN-DETAILED		S.FALL	
CHECKED-REVIEWED			
REVISIONS 1			
REVISIONS 2			
REVISIONS 3			
REVISIONS 4			
REVISIONS 5			
REVISIONS 6			
REVISIONS 7			
REVISIONS 8			

SIGNATURE

P.E. NUMBER

DATE

STATE OF MAINE
DEPARTMENT OF TRANSPORTATION

16710.00

PIN 16710.00

ME 3841 NH 251/108

BRIDGE PLANS

SARAH MILDRED LONG BRIDGE
PISCATAQUA RIVER
KITTERY, ME PORTSMOUTH, NH

GENERAL PLAN AND ELEVATION I

PREPARED BY: FIGG

SHEET NUMBER

G13

OF B167

Filename: ...\MSTA\014_Bridge_GPE_II.dgn Division: BRIDGE Username: wjohnson Date:1/31/2014

60% PLANS (1-31-2014)

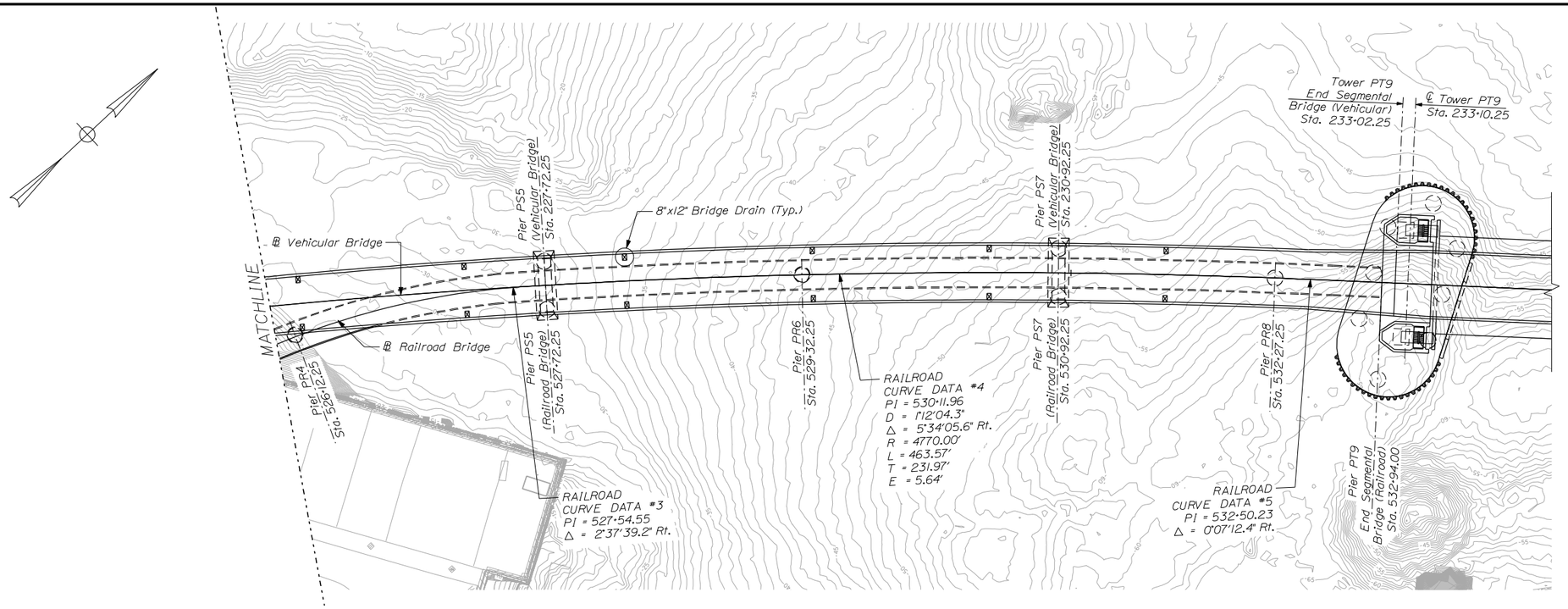

PLAN

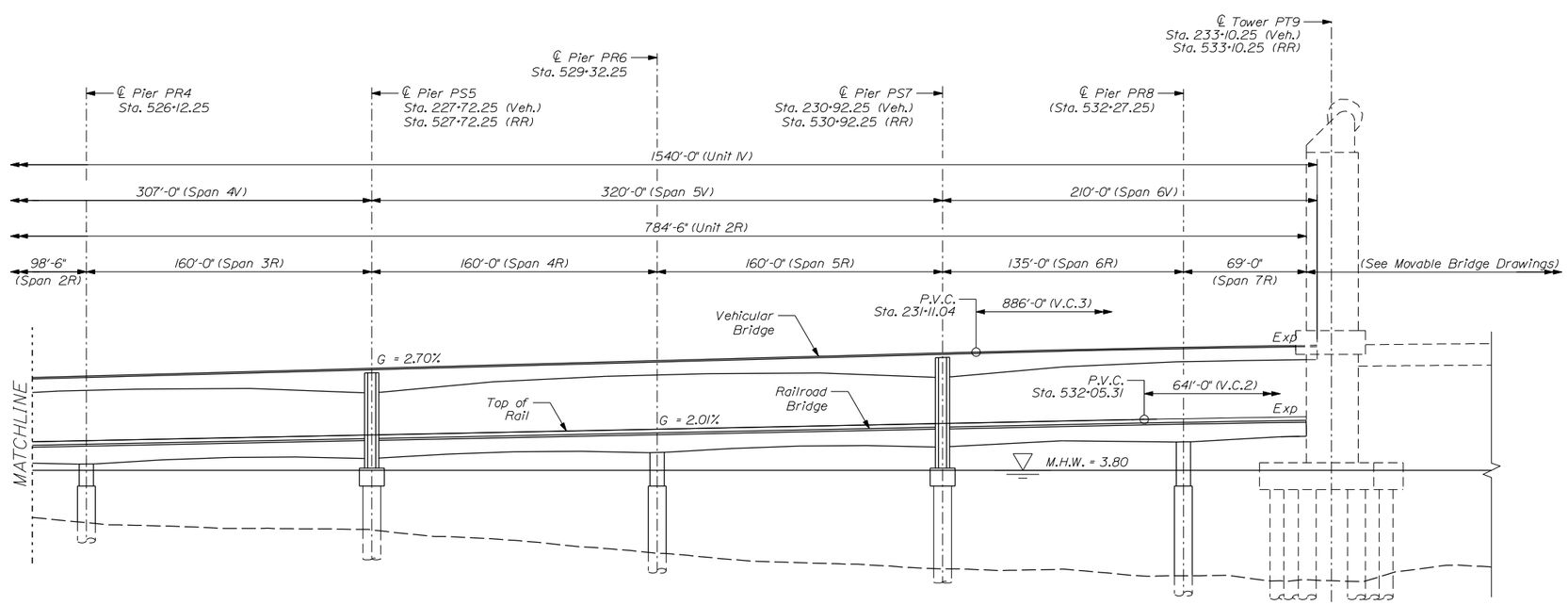

ELEVATION

PRELIMINARY - NOT FOR CONSTRUCTION

STATE OF MAINE
DEPARTMENT OF TRANSPORTATION

16710.00

PIN 16710.00

ME 3841 NH 251/108

BRIDGE PLANS

PROJ. MANAGER	W.J. ROHLDER	BY	DATE
DESIGN-DETAILED		S.FALL	
CHECKED-REVIEWED			
REVISIONS 1			
REVISIONS 2			
REVISIONS 3			
REVISIONS 4			
REVISIONS 5			
REVISIONS 6			
REVISIONS 7			
REVISIONS 8			

SIGNATURE

P.E. NUMBER

DATE

SARAH MILDRED LONG BRIDGE
PISCATAQUA RIVER
KITTERY, ME PORTSMOUTH, NH

GENERAL PLAN AND ELEVATION II

PREPARED BY: FIGG

SHEET NUMBER

G14

OF B167

Filename: ...\MSTA\015_Bridge_GPE_III.dgn Division: BRIDGE Username: wjohnson Date:1/31/2014

60% PLANS (1-31-2014)

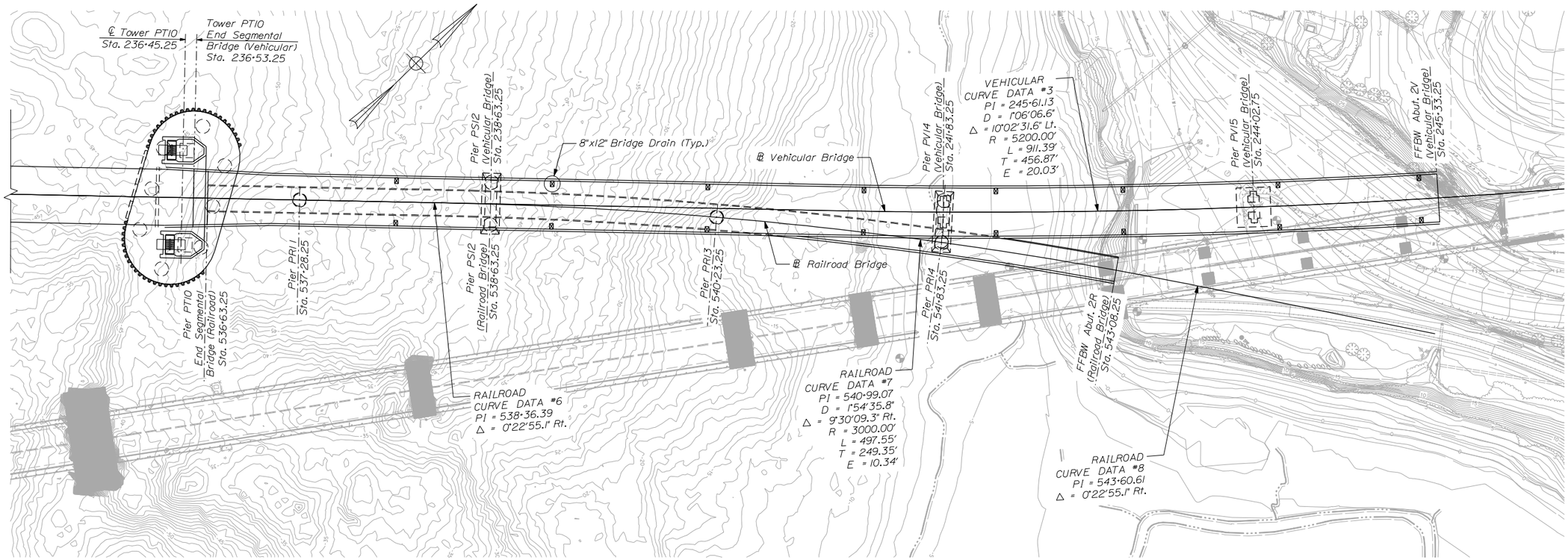

PLAN

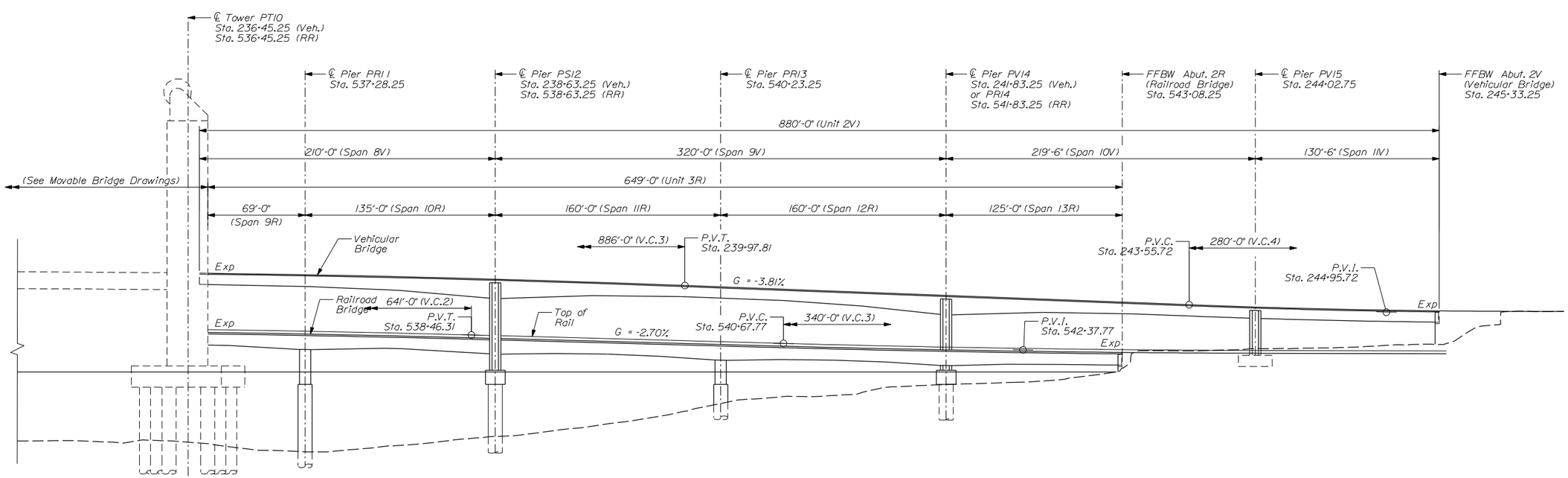

ELEVATION

PRELIMINARY - NOT FOR CONSTRUCTION

PROJ. MANAGER	W.J. ROHLEDER	BY	DATE
DESIGN-DETAILED		S.FALL	
CHECKED-REVIEWED			
REVISIONS 1			
REVISIONS 2			
REVISIONS 3			
REVISIONS 4			
REVISIONS 5			
REVISIONS 6			
REVISIONS 7			
REVISIONS 8			

SARAH MILDRED LONG BRIDGE
PISCATAQUA RIVER
KITTERY, ME PORTSMOUTH, NH

GENERAL PLAN AND
ELEVATION III

PREPARED BY: FIGG

STATE OF MAINE
DEPARTMENT OF TRANSPORTATION

16710.00

PIN 16710.00

ME 3841 NH 251/108

BRIDGE PLANS

SIGNATURE

P.E. NUMBER

DATE

SHEET NUMBER

G15

OF B167

Filename: ...\G-temp\018_Typ_Sections.dgn Division: BRIDGE Username: wjohnson Date:1/31/2014
60% PLANS (1-31-2014)

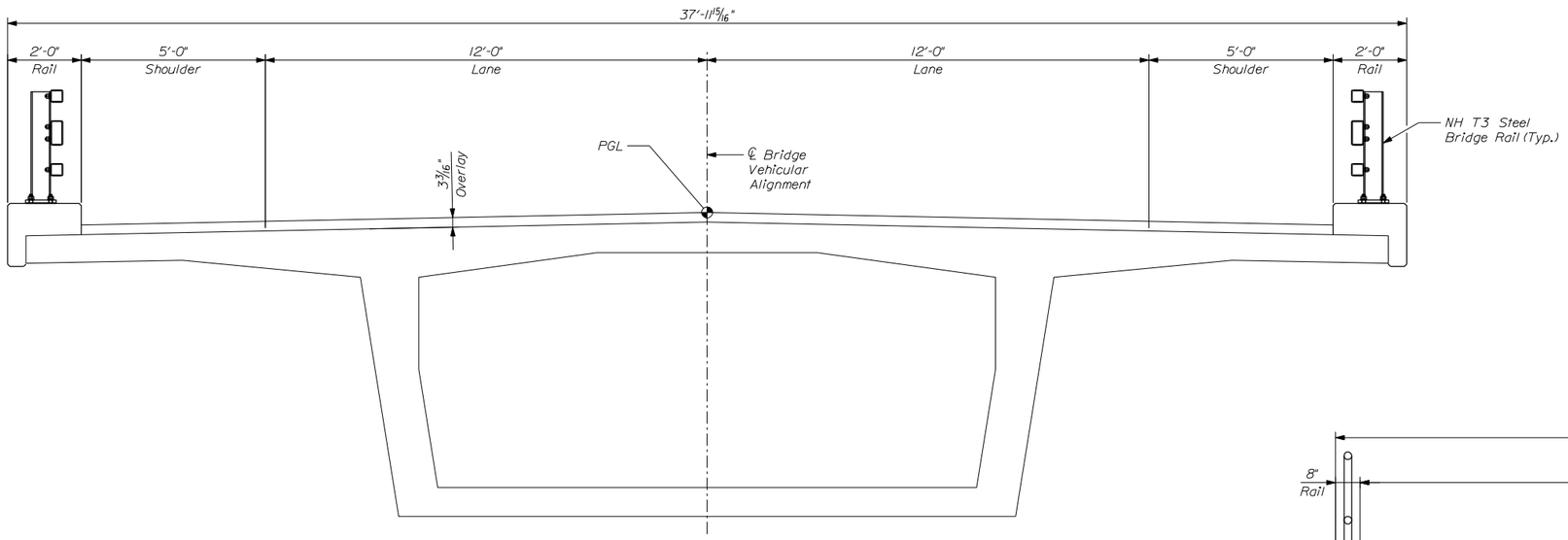

TYPICAL SECTION (VEHICULAR BRIDGE)

(Sta. 217+52.25 to Sta. 243+83.25)

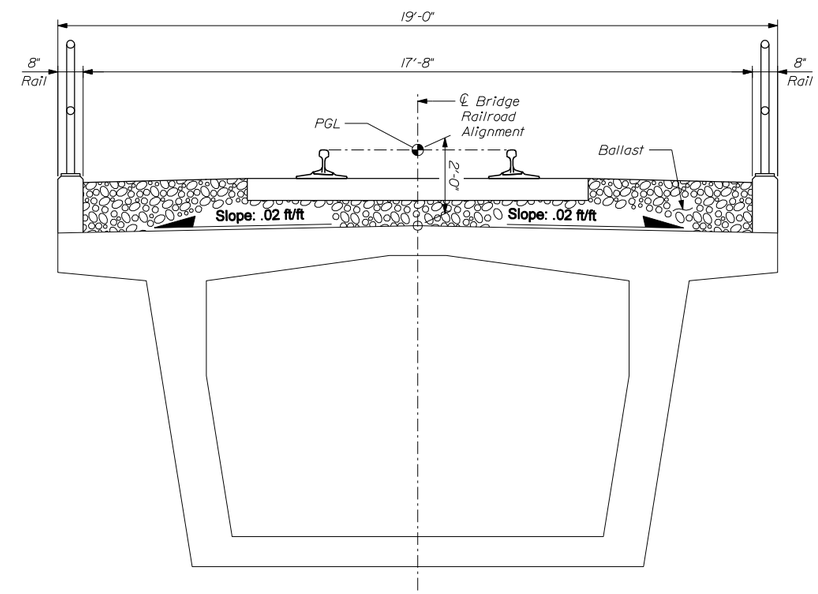

TYPICAL SECTION (RAILROAD BRIDGE)

(Sta. 525+12.25 to Sta. 542+83.25)

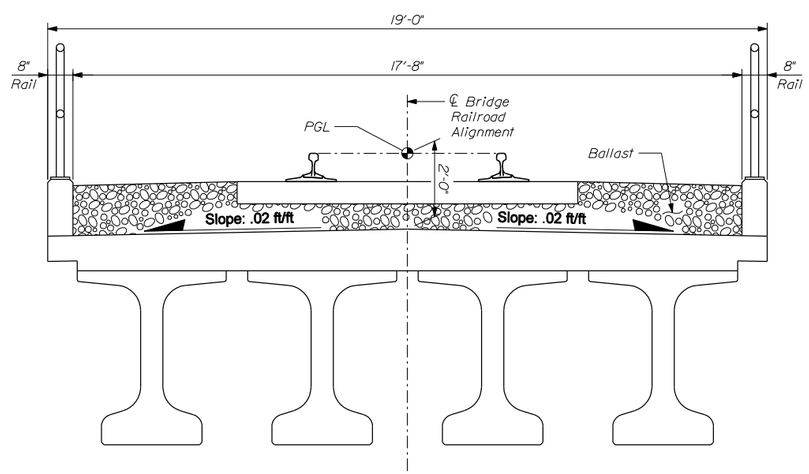

TYPICAL SECTION (RAILROAD BRIDGE)

(Sta. 524+52.25 to Sta. 525+12.25)

STATE OF MAINE
DEPARTMENT OF TRANSPORTATION

16710.00

PIN 16710.00

BRIDGE PLANS

ME 3841 NH 251/108

PROJ. MANAGER	W.J. ROHLEDER	BY
DESIGN-DETAILED		B.SHEPARD
CHECKED-REVIEWED		
REVISIONS 1		
REVISIONS 2		
REVISIONS 3		
REVISIONS 4		
REVISIONS 5		
REVISIONS 6		
REVISIONS 7		
REVISIONS 8		

SIGNATURE

P.E. NUMBER

DATE

PRELIMINARY - NOT FOR CONSTRUCTION

SARAH MILDRED LONG BRIDGE
PISCATAQUA RIVER
KITTERY, ME PORTSMOUTH, NH

TYPICAL SECTIONS

PREPARED BY: FIGG

SHEET NUMBER

G18

OF B167

Filename: ...\158_Construction_Schematic_1.dgn Division: BRIDGE Username: w.johnson Date:1/31/2014
60% PLANS (1-31-2014)

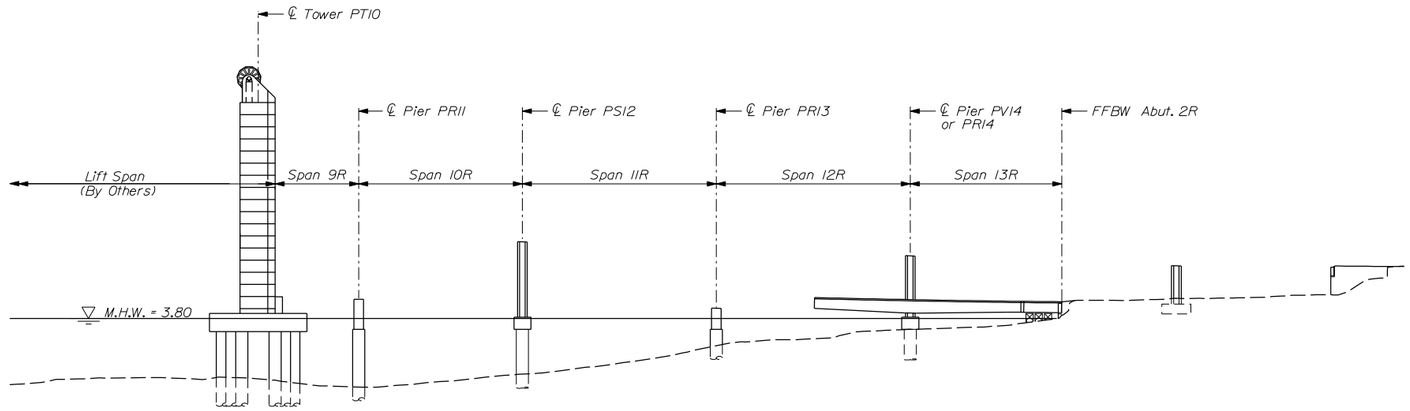

1.0 Construct foundations and piers.

2.0 Erect railroad cantilever PR14. See Construction Schematic V11.
2.1 Erect railroad end segments at Abutment 2R on falsework.
2.2 Close span 13R. see See Construction Schematic X.
2.3 Grout bearing at Abutment 2R.
2.4 Remove falsework at Abutment 2R and stabilizer bars at PR14.

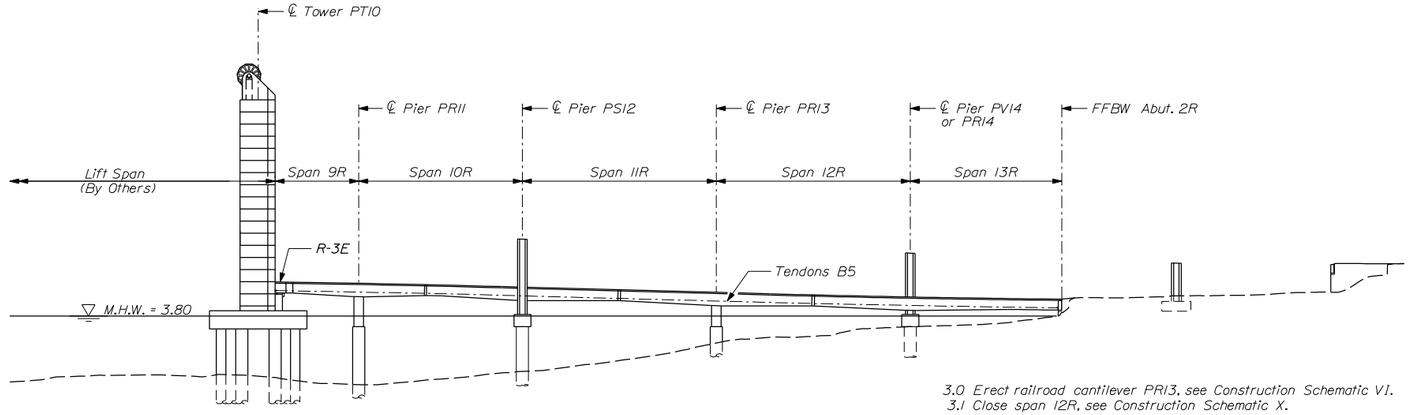

3.0 Erect railroad cantilever PR13. see Construction Schematic V1.
3.1 Close span 12R. see Construction Schematic X.
3.2 Release bearing horizontal restraint at PR14.

4.0 Erect railroad cantilever PR12. see Construction Schematic V11.
4.1 Close span 11R. see Construction Schematic X.
4.2 Remove stabilizer Post Tensioning bars at PS12.
4.3 Release bearing horizontal restraint at PS12.

5.0 Erect railroad cantilever PR11. see Construction Schematic V1.
5.1 Close span 10R. see Construction Schematic X.
5.2 Erect segment R-3E at tower PT10 on temporary support..
5.3 Close span 9R. see Construction Schematic X.
5.4 Grout bearings at PT10.
5.5 Remove temporary support at PT10.

6.0 Stress tendons B5.

NOTES:
1. For notes. see Construction Schematic X.

KITTERY RAILROAD APPROACH CONSTRUCTION SEQUENCE

STATE OF MAINE
DEPARTMENT OF TRANSPORTATION

16710.00

PIN 16710.00
ME 3841 NH 251/108 BRIDGE PLANS

SIGNATURE
P.E. NUMBER
DATE

		BY	DATE
PROJ. MANAGER	W.J. ROHLDER		
DESIGN-DETAILED			
CHECKED-REVIEWED			
REVISIONS 1			
REVISIONS 2			
REVISIONS 3			
REVISIONS 4			
REVISIONS 5			
REVISIONS 6			
REVISIONS 7			
REVISIONS 8			

PRELIMINARY - NOT FOR CONSTRUCTION

SARAH MILDRED LONG BRIDGE
PISCATAQUA RIVER
KITTERY, ME PORTSMOUTH, NH

CONSTRUCTION SCHEMATIC I

PREPARED BY: FIGG

SHEET NUMBER
B158
OF B167

Filename: ...\159_Construction_Schematic_2.dgn Division: BRIDGE Username: wjohnson Date:1/31/2014
60% PLANS (1-31-2014)

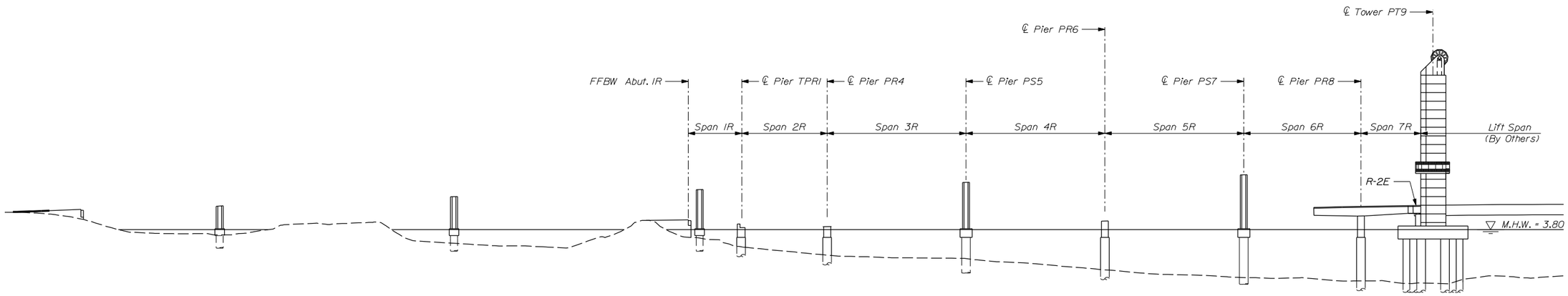

1.0 Construct foundations and piers.

2.0 Erect railroad cantilever PR8. See sheet Construction Schematic VI.
2.1 Erect segment R-2E at tower PT9 on temporary support.
2.3 Close span 7R, see Construction Schematic X.
2.4 Grout bearings at PT9.
2.5 Remove temporary support at PT9.

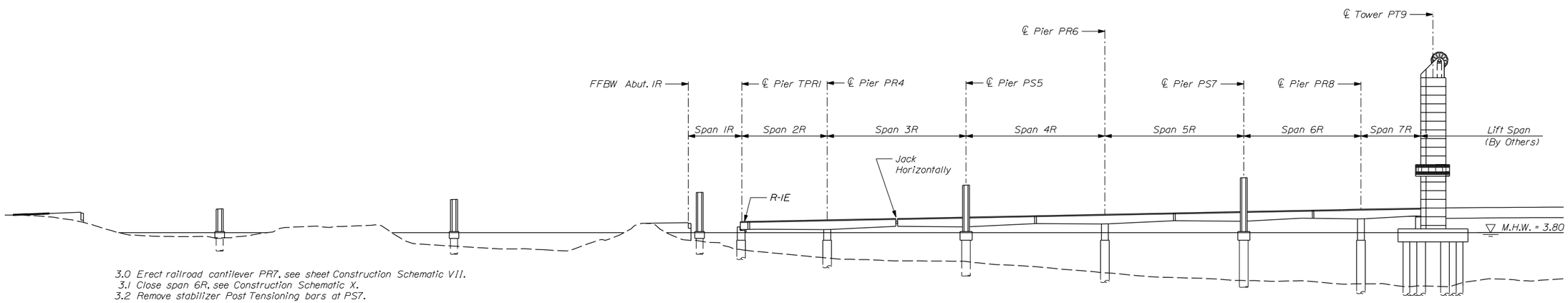

3.0 Erect railroad cantilever PR7, see sheet Construction Schematic VII.
3.1 Close span 6R, see Construction Schematic X.
3.2 Remove stabilizer Post Tensioning bars at PS7.
3.3 Release horizontal restraint at PS7.

4.0 Erect railroad cantilever PR6, see Construction Schematic VI.
4.1 Close span 5R, see Construction Schematic X.

5.0 Erect railroad cantilever PR5, see Construction Schematic VII.
5.1 Close span 4R, see Construction Schematic X.
5.2 Remove stabilizer Post Tensioning bars at PS5.

6.0 Erect railroad cantilever PR4, see Construction Schematic VI.
6.1 Erect segment R-IE at TPRI on temporary support.
6.2 Close span 2R, see Construction Schematic X.
6.3 Grout bearings at TPRI.
6.4 Remove temporary support at TPRI.

7.0 Jack horizontally 1000k on cantilever tips at span 3R closure.

NOTES:
1. For notes, see Construction Schematic X.

PORTSMOUTH RAILROAD APPROACH CONSTRUCTION SEQUENCE I

PRELIMINARY - NOT FOR CONSTRUCTION

STATE OF MAINE
DEPARTMENT OF TRANSPORTATION
16710.00
PIN 16710.00
ME 3641 NH 251/108
BRIDGE PLANS

SIGNATURE
P.E. NUMBER
DATE

PROJ. MANAGER	W.J. ROHLEDER	BY	DATE
DESIGN-DETAILED			
CHECKED-REVIEWED			
REVISIONS 1			
REVISIONS 2			
REVISIONS 3			
REVISIONS 4			
REVISIONS 5			
REVISIONS 6			
REVISIONS 7			
REVISIONS 8			

SARAH MILDRED LONG BRIDGE
PISCATAQUA RIVER
KITTERY, ME PORTSMOUTH, NH

CONSTRUCTION SCHEMATIC II

PREPARED BY: FIGG

SHEET NUMBER
B159
OF B167

Filename: ...\160_Construction_Schematic_3.dgn Division: BRIDGE Username: wjohnson Date:1/31/2014
60% PLANS (1-31-2014)

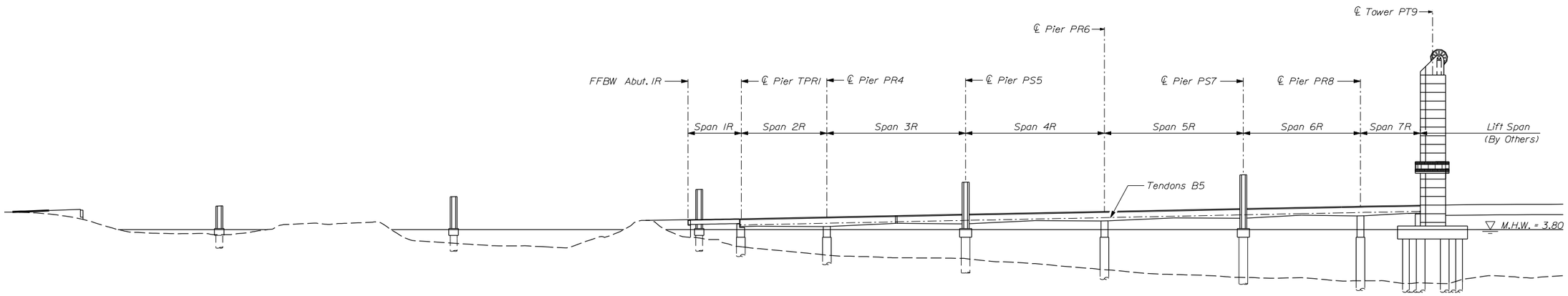

8.0 Close span 3R, see Construction Schematic X.
8.1 Stress tendons B5.

9.0 Erect girders in span 1R and cast deck.

NOTES:
1. For notes, see Construction Schematic X.

PORTSMOUTH RAILROAD APPROACH CONSTRUCTION SEQUENCE II

PRELIMINARY - NOT FOR CONSTRUCTION

STATE OF MAINE
DEPARTMENT OF TRANSPORTATION

16710.00

PIN 16710.00

ME 3641 NH 251/108 BRIDGE PLANS

SIGNATURE
P.E. NUMBER
DATE

		BY	DATE
PROJ. MANAGER	W.J. ROHLEDER		
DESIGN-DETAILED			
CHECKED-REVIEWED			
REVISIONS 1			
REVISIONS 2			
REVISIONS 3			
REVISIONS 4			
REVISIONS 5			
REVISIONS 6			
REVISIONS 7			
REVISIONS 8			

SARAH MILDRED LONG BRIDGE
PISCATAQUA RIVER
PORTSMOUTH, NH
KITTERY, ME

CONSTRUCTION
SCHEMATIC III

PREPARED BY: FIGG

SHEET NUMBER
B160
OF B167

Filename: ...\161_Construction_Schematic_4.dgn Division: BRIDGE Username: w.johnson Date:1/31/2014
60% PLANS (1-31-2014)

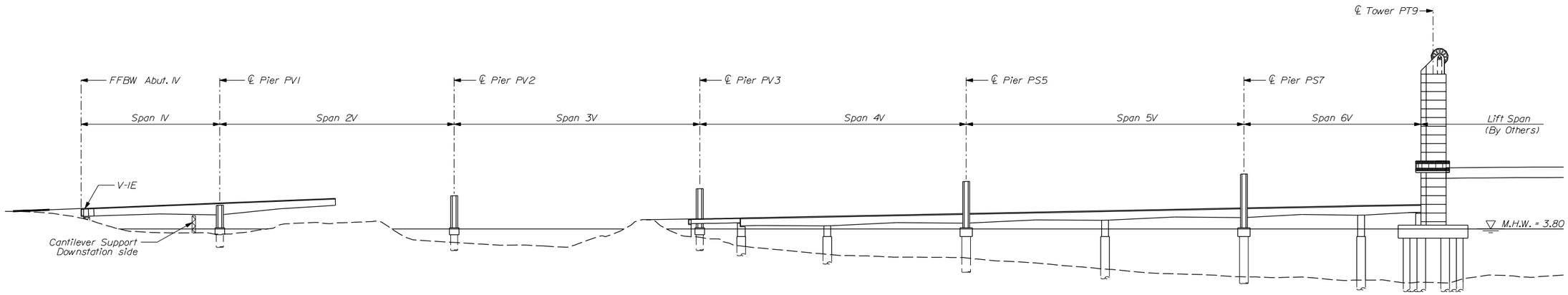

1.0 Erect vehicle cantilever PV1, see Construction Schematic IX.
1.1 Erect segment V-IE at Abutment IV on temporary support.
1.2 Close span IV, see Construction Schematic X.
1.3 Grout bearings at Abutment IV.
1.4 Remove temporary support at Abutment IV.
1.5 Remove cantilever support at pier PV1.

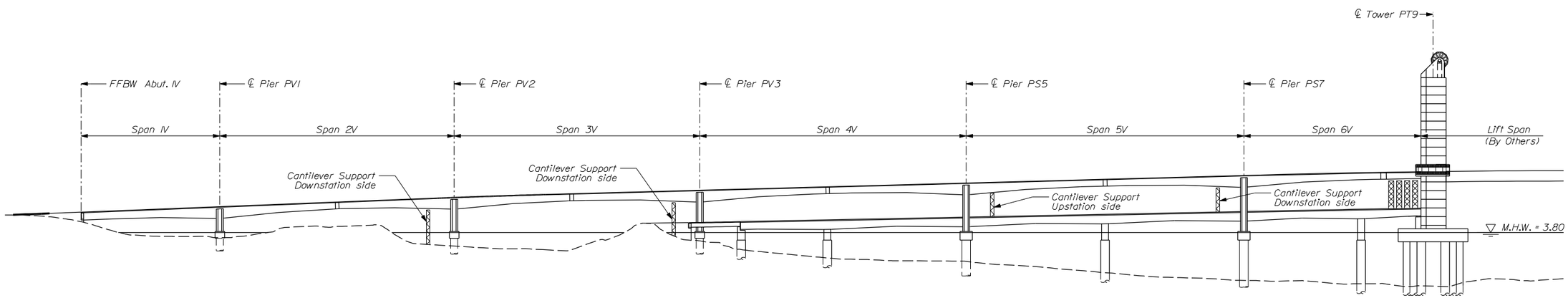

2.0 Erect vehicle cantilever PV2, see Construction Schematic IX.
2.1 Close span 2V, see Construction Schematic X.
2.2 Remove cantilever support at pier PV2.
2.3 Release bearing horizontal restraint at PV1.

3.0 Erect vehicle cantilever PV3, see Construction Schematic IX.
3.1 Close span 3V, see Construction Schematic X.
3.2 Remove cantilever support at pier PV3.
3.3 Release bearing horizontal restraint at PV2.

4.0 Erect vehicle cantilever PV5, see Construction Schematic VIII.
4.1 Close span 4V, see Construction Schematic X.
4.2 Release bearing horizontal restraint at PV3.

5.0 Erect vehicle cantilever PV7, see Construction Schematic VIII.
5.1 Erect vehicle end segments at Tower PT9 on falsework from railroad bridge.
5.2 Close span 6V, see Construction Schematic X.
5.3 Grout bearings at PT9.
5.4 Remove falsework at PT9.
5.5 Close span 5V, see Construction Schematic X.
5.6 Remove cantilever supports at piers PS5 and PS7.

NOTES:
1. For notes, see Construction Schematic X.

PORTSMOUTH VEHICLE APPROACH CONSTRUCTION SEQUENCE

PRELIMINARY - NOT FOR CONSTRUCTION

SARAH MILDRED LONG BRIDGE
PISCATAQUA RIVER
KITTERY, ME PORTSMOUTH, NH

CONSTRUCTION SCHEMATIC IV

STATE OF MAINE
DEPARTMENT OF TRANSPORTATION

16710.00

PIN 16710.00

ME 3641 NH 251/108

BRIDGE PLANS

	BY	DATE
PROJ. MANAGER	W.J. ROHLOFF	
DESIGN-DETAILED		
CHECKED-REVIEWED		
REVISIONS 1		
REVISIONS 2		
REVISIONS 3		
REVISIONS 4		
REVISIONS 5		
REVISIONS 6		
REVISIONS 7		
REVISIONS 8		

SIGNATURE
P.E. NUMBER
DATE

PREPARED BY: FIGG

SHEET NUMBER
B161
OF B167

Filename: ...\162_Construction_Schematic_5.dgn Division: BRIDGE Username: w.johnson Date:1/31/2014
60% PLANS (1-31-2014)

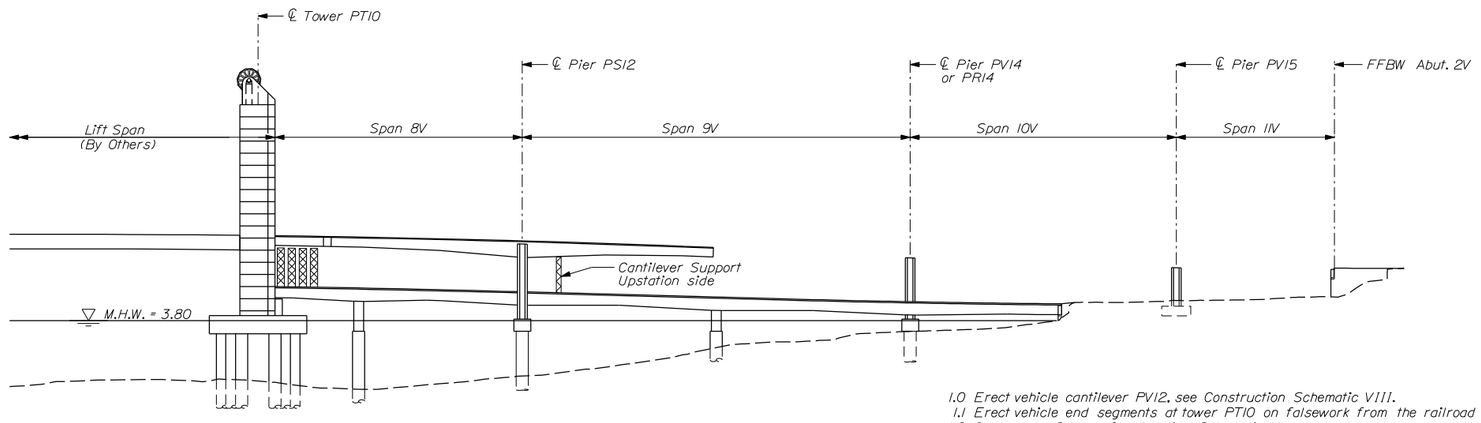

1.0 Erect vehicle cantilever PV12, see Construction Schematic VIII.
1.1 Erect vehicle end segments at tower PT10 on falsework from the railroad bridge.
1.2 Close span 8V, see Construction Schematic X.
1.3 Grout bearings at PT10.
1.4 Remove falsework at PT10.

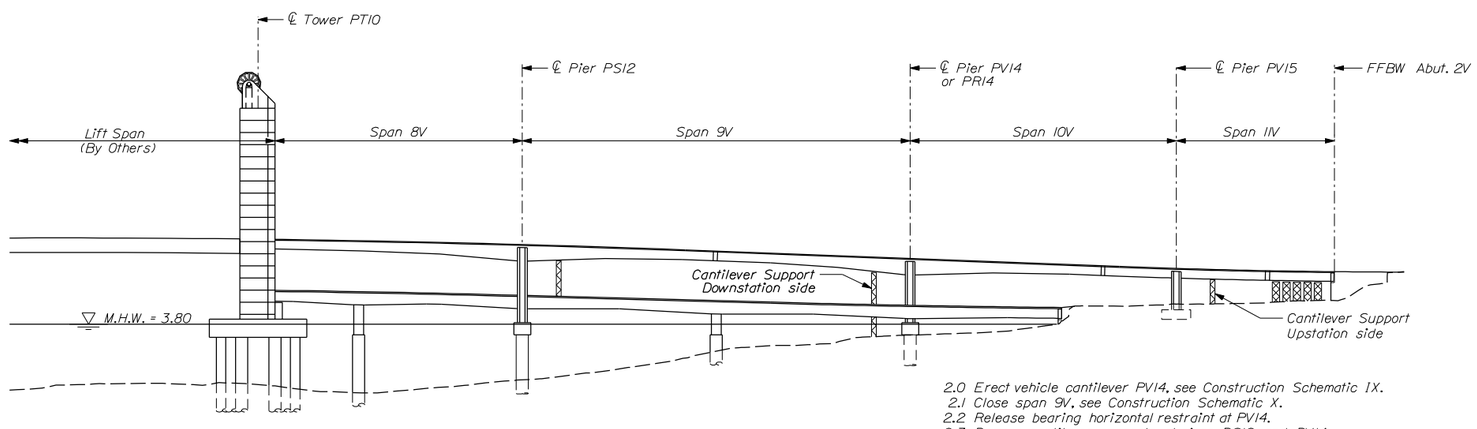

2.0 Erect vehicle cantilever PV14, see Construction Schematic IX.
2.1 Close span 9V, see Construction Schematic X.
2.2 Release bearing horizontal restraint at PV14.
2.3 Remove cantilever supports at piers PS12 and PV14.

3.0 Erect vehicle cantilever PV15, see Construction Schematic IX.
3.1 Close span 10V, see Construction Schematic X.
3.2 Release bearing horizontal restraint at PV15.
3.3 Erect vehicle end segments at Abutment 2V on falsework.
3.4 Close span 11V, see Construction Schematic X.
3.5 Grout bearings at Abutment 2V.
3.6 Remove falsework at Abutment 2V and cantilever support at PV15.

4.0 Construct barriers, expansion joints, ballast, and rail.

NOTES:
1. For notes, see Construction Schematic X.

KITTERY VEHICLE APPROACH CONSTRUCTION SEQUENCE

PRELIMINARY - NOT FOR CONSTRUCTION

STATE OF MAINE
DEPARTMENT OF TRANSPORTATION

16710.00

PIN 16710.00
ME 3641 NH 251/108 BRIDGE PLANS

SIGNATURE
P.E. NUMBER
DATE

		BY	DATE
PROJ. MANAGER	W.J. ROHLOFF		
DESIGN-DETAILED			
CHECKED-REVIEWED			
REVISIONS 1			
REVISIONS 2			
REVISIONS 3			
REVISIONS 4			
REVISIONS 5			
REVISIONS 6			
REVISIONS 7			
REVISIONS 8			

SARAH MILDRED LONG BRIDGE
PISCATAQUA RIVER
KITTERY, ME PORTSMOUTH, NH

CONSTRUCTION
SCHEMATIC V

PREPARED BY: FIGG

SHEET NUMBER
B162
OF B167

Filename: ...\104_Fender_Pier_Layout.dgn
Division: BRIDGE
Username: common
Date:2/13/2014
60% PLANS (2-14-2014)

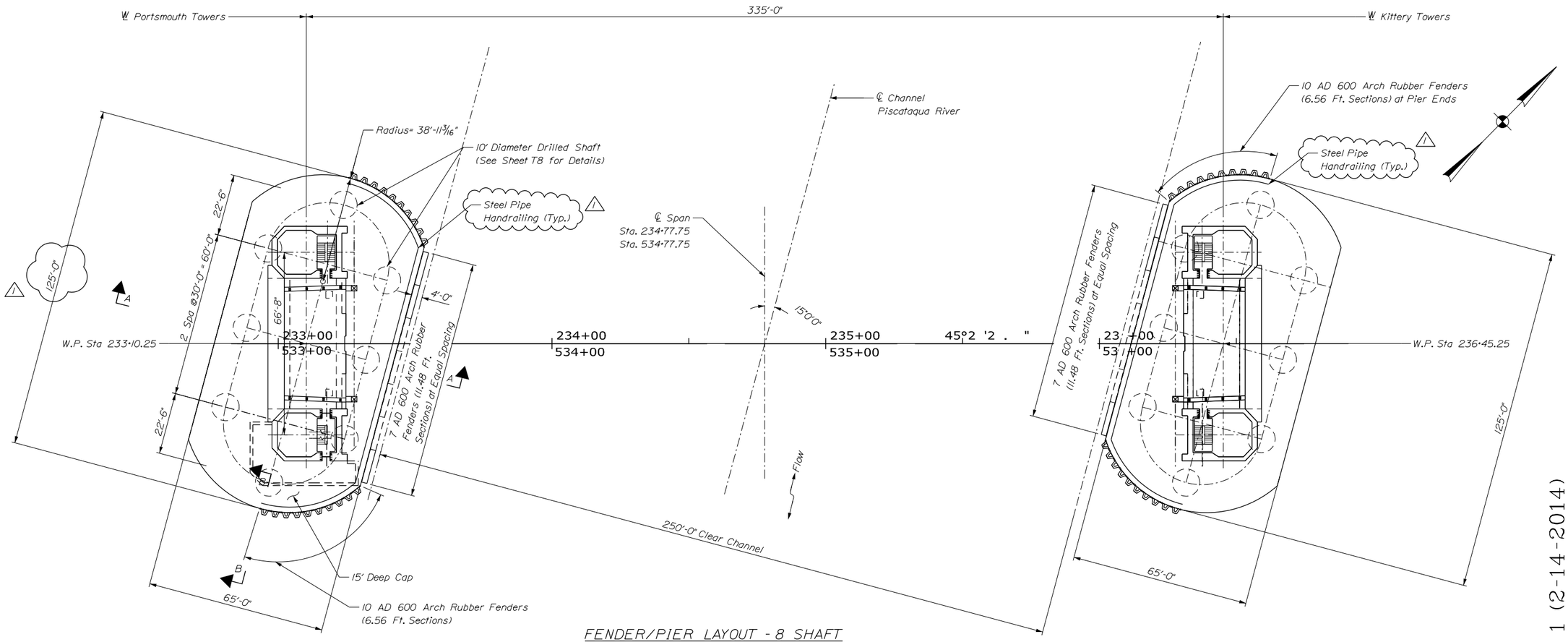

FENDER/PIER LAYOUT - 8 SHAFT

20' 10' 0 20'

1" = 20'

Quantities for Pier (Includes 2 Piers)

Concrete Cap: 8,480 CY	1
Treme Concrete: 505 CY	1
10'ϕ Drilled Shaft Qty: 16	
Average Drilled Shaft Length: 70 LF	1
Average Rock Socket Length: 35 LF	
Heavily Reinforced Shaft Reinforcement: 2,165,000 LBS	1
Pier Cap Reinforcement: 1,070,000 LBS	1
Pier Box Reinforcement: 679,000 LBS	1
Fender Length: 1,130 LF	1
11.48 Ft AD 600 Arch Fenders: 42	1
6.56 Ft AD 600 Arch Fenders: 80	1
Concrete Protective Coating for Pier Top: 10,200 SF	1
Steel Pipe Handrail: 3,750 LF	1

Notes:

1. For Section A and Section B.
   See Sheet F2.
2. For Drilled Shaft Details.
   See Sheet T8.
3. For Pier Cap Reinforcement Details.
   See Sheet T2.
4. For Pier Box Reinforcement Details.
   See Sheet T6.

STATE OF MAINE
DEPARTMENT OF TRANSPORTATION

16710.00

PIN 16710.00

ME 3641 NH 251/108

BRIDGE PLANS

PROJ MANAGER	JEFF POLSOM	BY	DATE
DESIGN-DETAILED			
CHECKED-REVIEWED			
REVISIONS 1	Updated Pier Shape, Quantities	2-14-2014	SIGNATURE
REVISIONS 2			
REVISIONS 3			P.E. NUMBER
REVISIONS 4			
REVISIONS 5			
REVISIONS 6			DATE
REVISIONS 7			
REVISIONS 8			

60% SUBMISSION - REVISION 1 (2-14-2014)
PRELIMINARY - NOT FOR CONSTRUCTION

SARAH MILDRED LONG BRIDGE
PISCATAQUA RIVER
KITTERY, ME PORTSMOUTH, NH

PIER PROTECTION - GENERAL LAYOUT

PREPARED BY:

SHEET NUMBER

F1

OF F2

60% PLANS (2-14-2014)
Date:2/13/2014
Username: common
Division: BRIDGE
Filename: ...\10_Str\105_Fender_Details.dgn

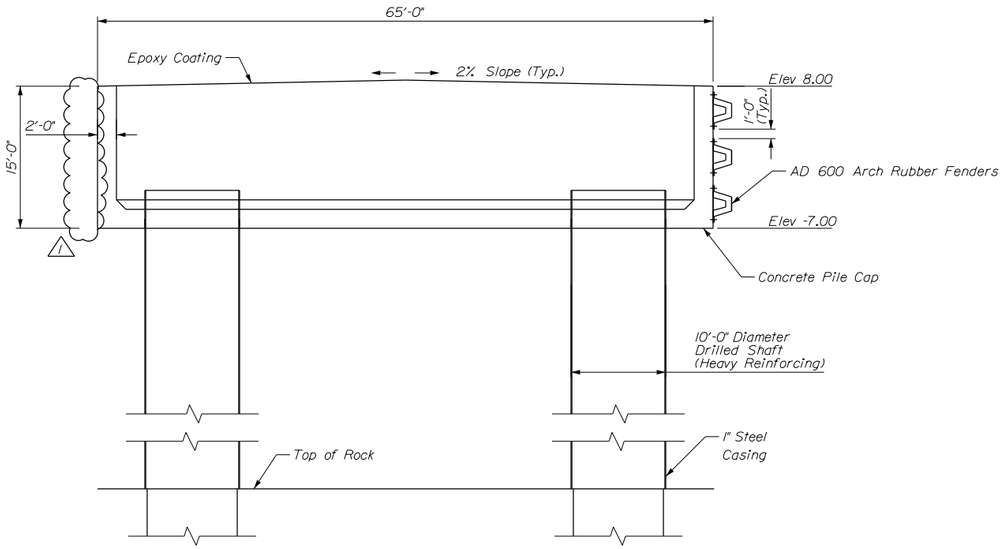

SECTION A

1'0 8' 16'
1/8" = 1'-0"

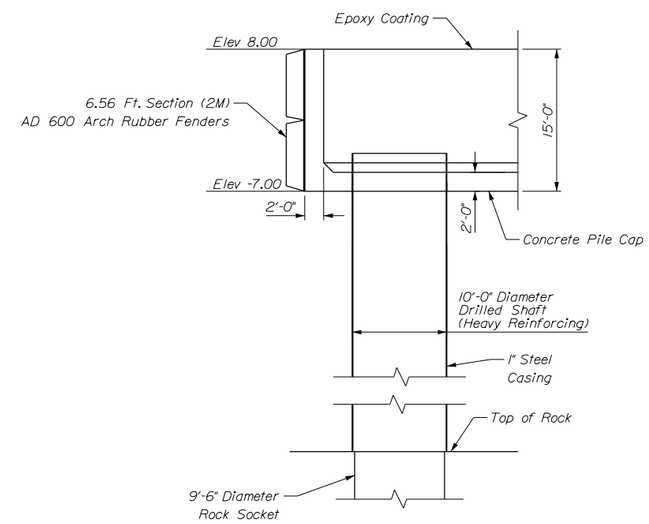

SECTION B

1'0 8' 16'
1/8" = 1'-0"

Notes:

1. For Location of Section A and Section B, See Sheet F1.
2. For Pier Box Reinforcement Details, See Sheet T6.
3. For Pier Cap Reinforcement Details, See Sheet T2.
4. Drilled Shafts Shown are Schematic. For Drilled Shaft Details, See Sheet T8.

STATE OF MAINE
DEPARTMENT OF TRANSPORTATION

16710.00

PIN 16710.00

ME 3641 NH 251/108 BRIDGE PLANS

PROJ. MANAGER	JEFF POLSOM	BY	DATE
DESIGN-DETAILED			
CHECKED-REVIEWED			
REVISIONS 1	Updated Pier Shape, Quantities		2-14-2014
REVISIONS 2			
REVISIONS 3			
REVISIONS 4			
REVISIONS 5			
REVISIONS 6			
REVISIONS 7			
REVISIONS 8			

SIGNATURE

P.E. NUMBER

DATE

60% SUBMISSION - REVISION 1 (2-14-2014)
PRELIMINARY - NOT FOR CONSTRUCTION

SARAH MILDRED LONG BRIDGE
PISCATAQUA RIVER
KITTERY, ME PORTSMOUTH, NH

PIER PROTECTION - DETAILS

PREPARED BY:

SHEET NUMBER
F2
OF F2

60% PLANS (2-14-2014)

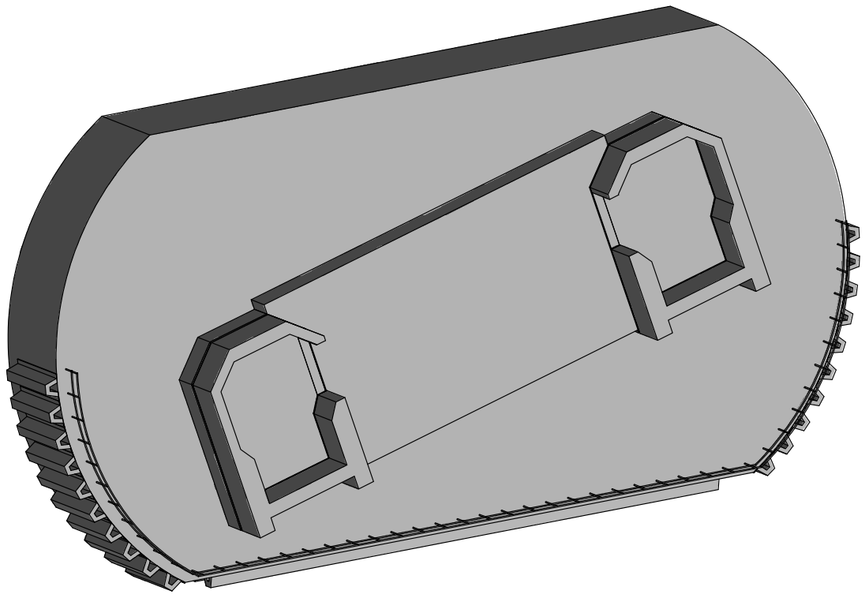

PORTSMOUTH TOWER FOOTING ISOMETRIC VIEW
SCALE: NTS

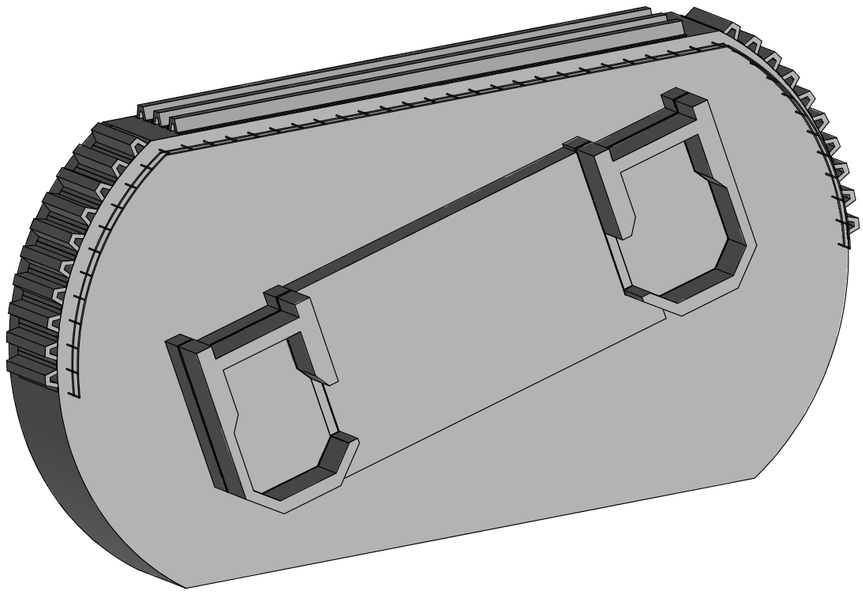

KITTERY TOWER FOOTING ISOMETRIC VIEW
SCALE: NTS

PREPARED BY:

60% SUBMISSION - REVISION 1 (2-14-2014)
PRELIMINARY - NOT FOR CONSTRUCTION

SHEET NUMBER
T1
OF T48

SARAH MILDRED LONG BRIDGE
PISCATAQUA RIVER
KITTERY, ME PORTSMOUTH, NH

FOUNDATIONS SECTION I
3D VIEWS

		BY	DATE
PROJ. MANAGER	M.HAWKINS		
DESIGN-DETAILED		JRB	01/30/14
CHECKED-REVIEWED			
REVISIONS 1	UPDATED PIER SHAPE		2/14/14
REVISIONS 2			
REVISIONS 3			
REVISIONS 4			
REVISIONS 5			
REVISIONS 6			
REVISIONS 7			
REVISIONS 8			

SIGNATURE
P.E. NUMBER
DATE

STATE OF MAINE
DEPARTMENT OF TRANSPORTATION
16710.00
PIN
ME 3641 NH 251/108 16710.00 BRIDGE PLANS

Filename: P:\inventor\02818.02 - Sarah Mildred Long Bridge\10_Str\DWG Files\60% Submission\T10-Tower Elevation.dwg
Division: BRIDGE Username: common Date: 1/21/2014

80% PLANS (2-14-2014)

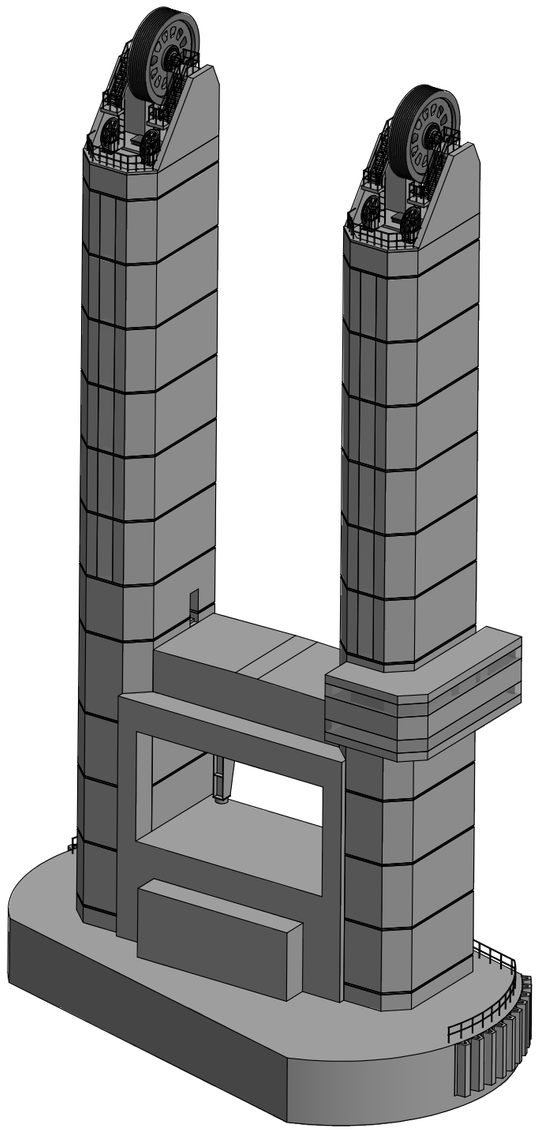

WEST TOWERS REAR ELEVATION ISOMETRIC VIEW
SCALE: NTS

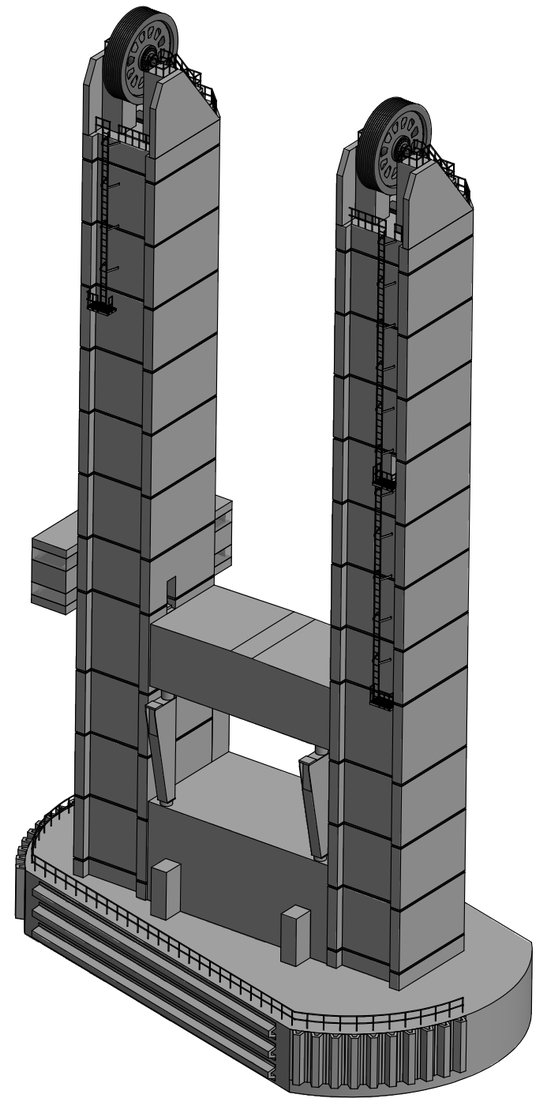

WEST TOWERS FRONT ELEVATION ISOMETRIC VIEW
SCALE: NTS

60% SUBMISSION - REVISION 1 (2-14-2014)
PRELIMINARY - NOT FOR CONSTRUCTION

PREPARED BY:

		BY	DATE
PROJ. MANAGER	M.HAWKINS		
DESIGN-DETAILED		JRG	01/30/14
CHECKED-REVIEWED			
REVISIONS 1	UPDATED PIER SHAPE		2/14/14
REVISIONS 2			
REVISIONS 3			
REVISIONS 4			
REVISIONS 5			
REVISIONS 6			
REVISIONS 7			
REVISIONS 8			

SIGNATURE

P.E. NUMBER

DATE

SARAH MILDRED LONG BRIDGE
PISCATAQUA RIVER
KITTERY, ME PORTSMOUTH, NH

TOWER ELEVATIONS
3D VIEWS

STATE OF MAINE
DEPARTMENT OF TRANSPORTATION

16710.00

PIN 16710.00

ME 3641 NH 251/108

BRIDGE PLANS

SHEET NUMBER

T10

OF T48

60% PLANS (1-31-2014)
Date:1/30/2014
Username: common
Division: BRIDGE
Filename: ...\10_Str\116_Tower Elevation.dgn

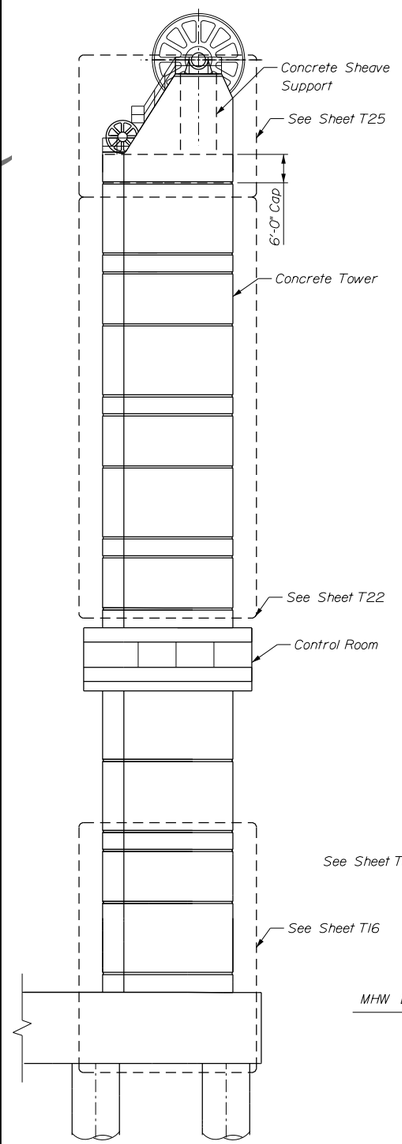

DOWNSTREAM ELEVATION

Hidden Lines Not Shown for Clarity

1'0 16' 32'
1/16" = 1'-0"

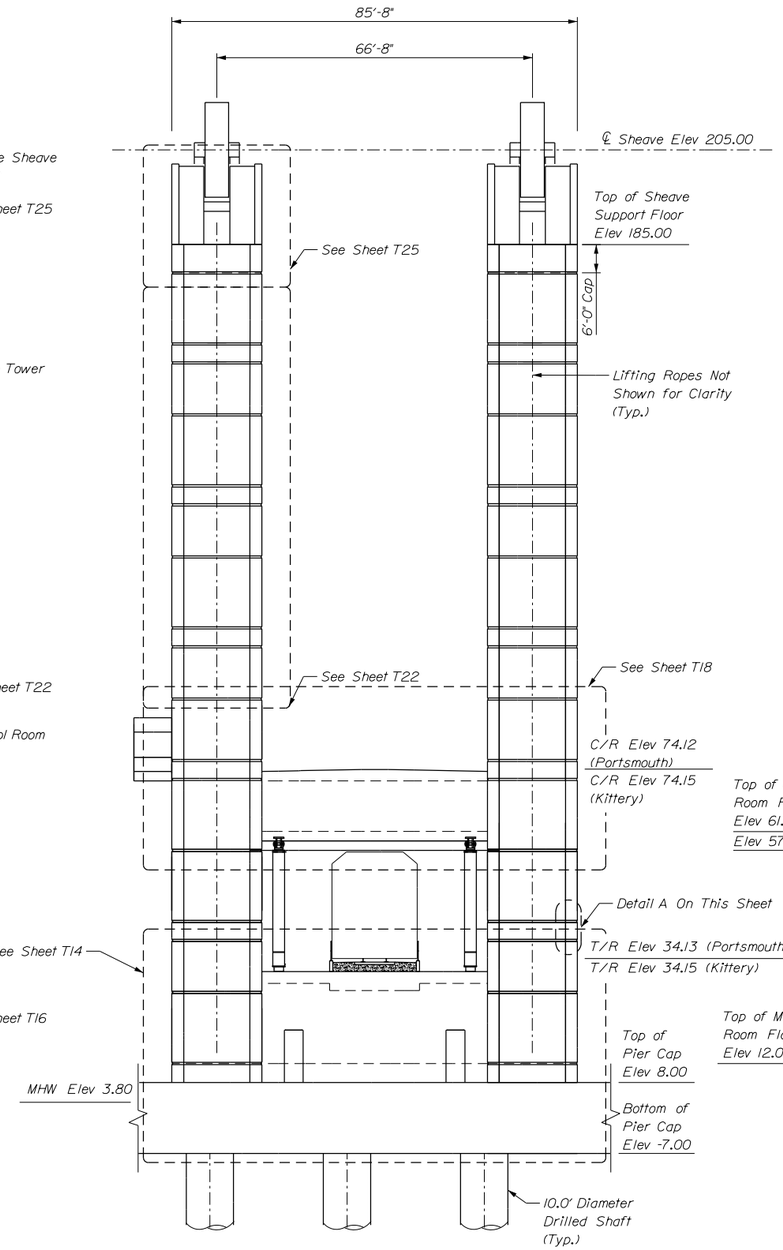

FRONT OF TOWER ELEVATION

1'0 16' 32'
1/16" = 1'-0"

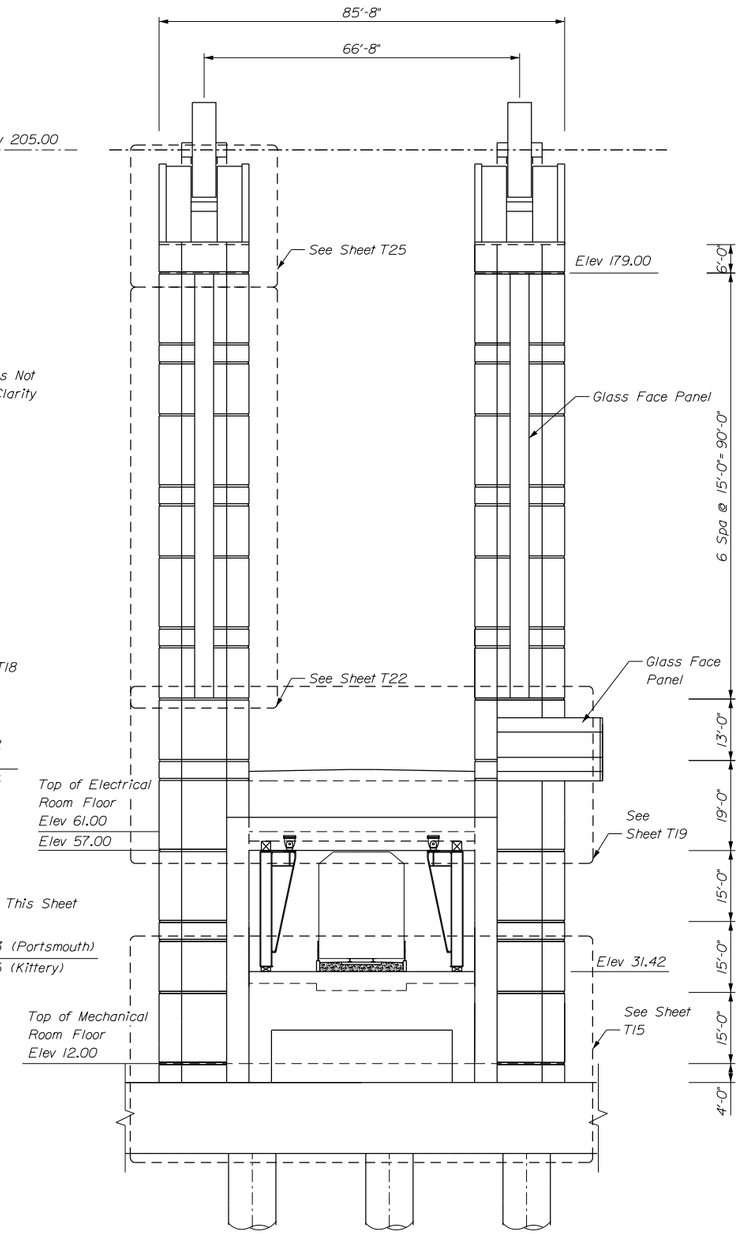

REAR OF TOWER ELEVATION

1'0 16' 32'
1/16" = 1'-0"

CONCRETE TOWER ELEVATIONS (PORTSMOUTH TOWER SHOWN)
(KITTERY TOWER SIMILAR WITHOUT CONTROL ROOM)

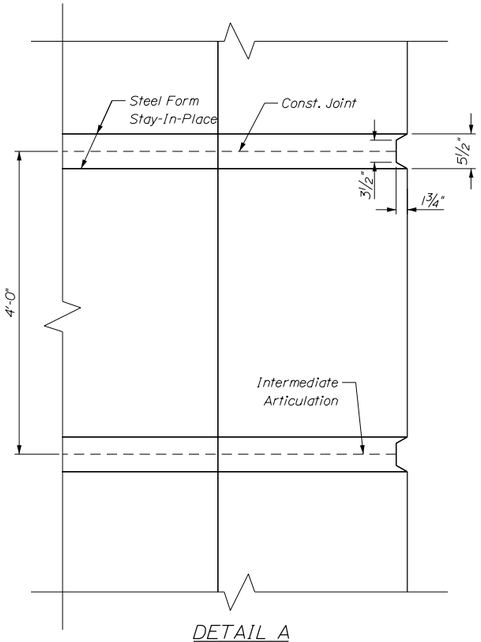

DETAIL A

1' 6" 0 1' 2'
1" = 1'-0"

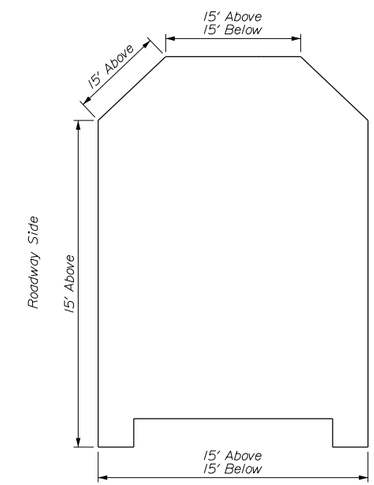

LIMITS OF CONCRETE PROTECTIVE COATING AT ROADWAY LEVEL

2' 0 4' 8'
3/16" = 1'-0"

Notes:

1. For Bridge General Layout. See Sheet F1.
2. For Tower Plan View. See Sheet T13.
3. For Tower Section Views. See Sheet T14-T20.

STATE OF MAINE
DEPARTMENT OF TRANSPORTATION

16710.00

PIN 16710.00

BRIDGE PLANS

ME 3641 NH 251/108

PROJ. MANAGER	JEFF FOLSOM	BY	DATE
DESIGN-DETAILED			
CHECKED-REVIEWED			
REVISIONS 1			
REVISIONS 2			
REVISIONS 3			
REVISIONS 4			
REVISIONS 5			
REVISIONS 6			
REVISIONS 7			
REVISIONS 8			

SIGNATURE
P.E. NUMBER
DATE

PRELIMINARY - NOT FOR CONSTRUCTION

SARAH MILDRED LONG BRIDGE
PISCATAQUA RIVER
PORTSMOUTH, NH
KITTERY, ME

TOWER ELEVATION

PREPARED BY:

SHEET NUMBER
T11
OF T48

Division: BRIDGE Username: common Date: 1/22/2014

Filename: P:\inventor\02818.02 - Sarah Mildred Long Bridge\10_Str\DWG Files\60% Submission_T12-Tower Lower Section.dwg

60% PLANS (2-14-2014)

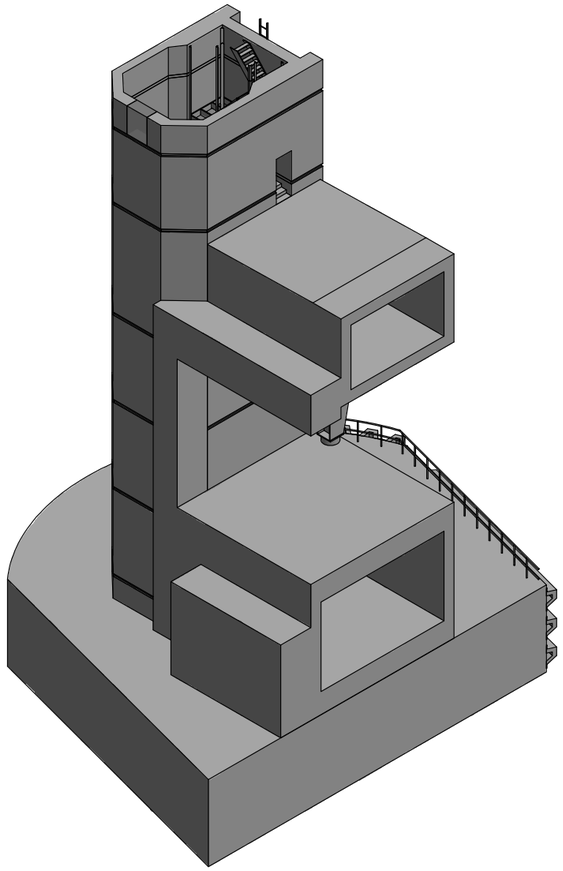

MACHINERY/ELECTRICAL ROOM ISOMETRIC SECTION
SCALE: NTS

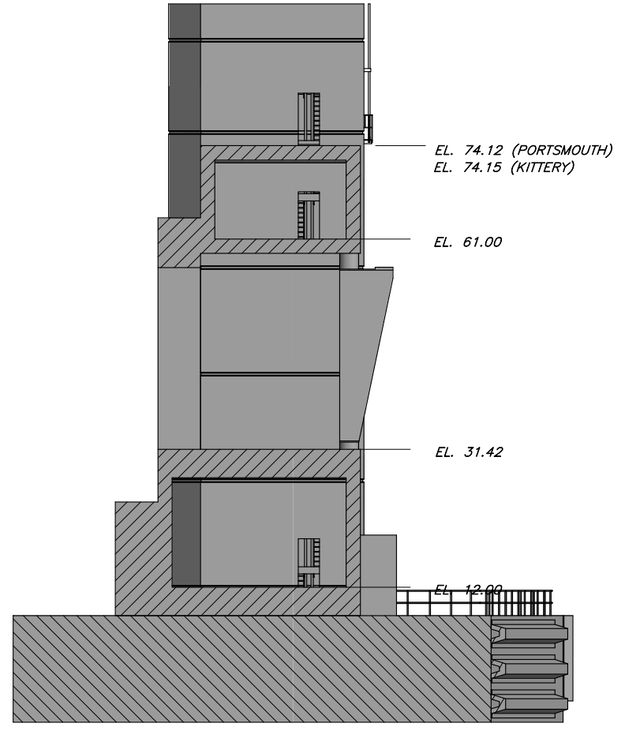

MACHINERY/ELECTRICAL ROOM SECTION
SCALE: NTS

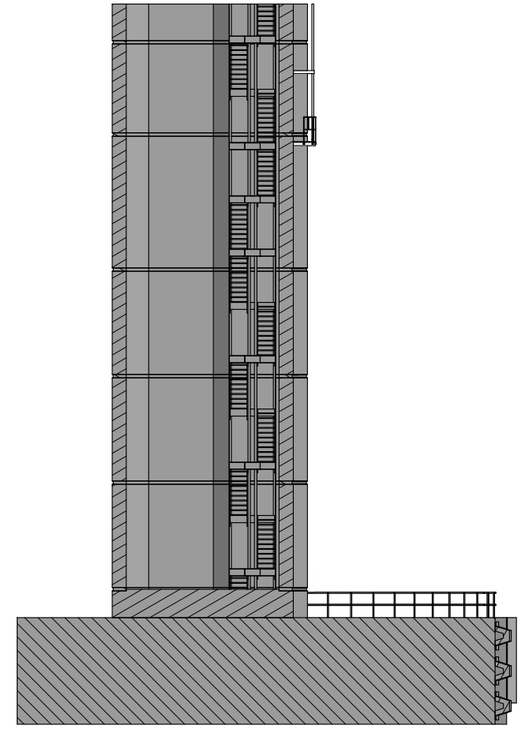

TOWER SECTION
SCALE: NTS

60% SUBMISSION - REVISION 1 (2-14-2014)
PRELIMINARY - NOT FOR CONSTRUCTION

PREPARED BY:

PROJ. MANAGER	M.WINKINS		
DESIGN-DETAILED			
CHECKED-REVIEWED			
REVISIONS 1	UPDATED PIER SHAPE	JRG	01/30/14
REVISIONS 2			
REVISIONS 3			
REVISIONS 4			
REVISIONS 5			
REVISIONS 6			
REVISIONS 7			
REVISIONS 8			

SARAH MILDRED LONG BRIDGE
PISCATAQUA RIVER
KITTERY, ME PORTSMOUTH, NH

TOWER LOWER SECTION
3D VIEWS

SHEET NUMBER
T12
OF T48

STATE OF MAINE
DEPARTMENT OF TRANSPORTATION

16710.00

PIN 16710.00
ME 3641 NH 251/108

BRIDGE PLANS

SIGNATURE
P.E. NUMBER
DATE

Filename: P:\inventor\02818.02 – Sarah Mildred Long Bridge\10_Str\DWG Files\60% Submission\02-Tower Access Tower Top.dwg
Division: BRIDGE Username: common Date: 1/21/2014

60% PLANS (1-31-2014)

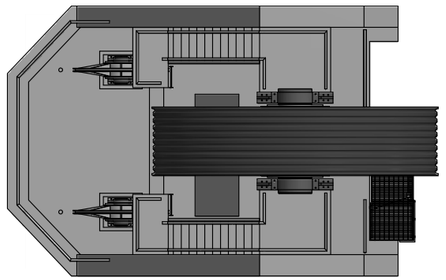

SOUTH TOWER PLAN VIEW
SCALE: NTS

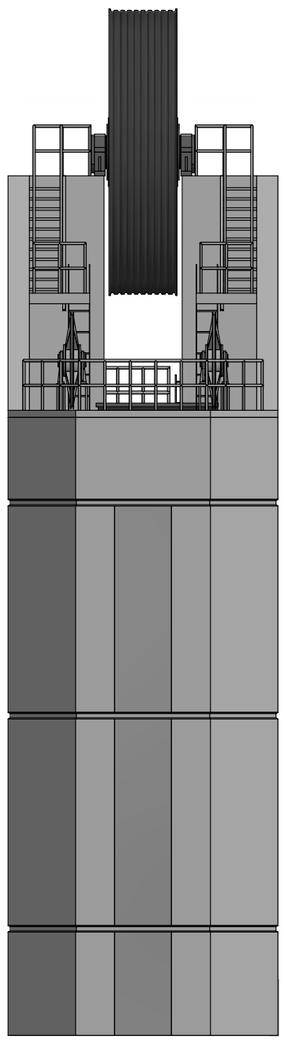

SOUTH TOWER REAR ELEVATION
SCALE: NTS

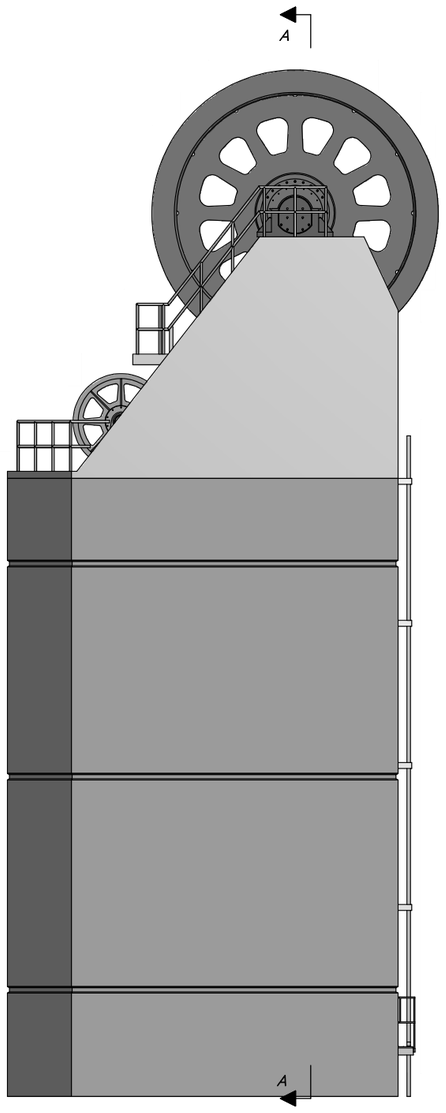

SOUTH TOWER SIDE ELEVATION
SCALE: NTS

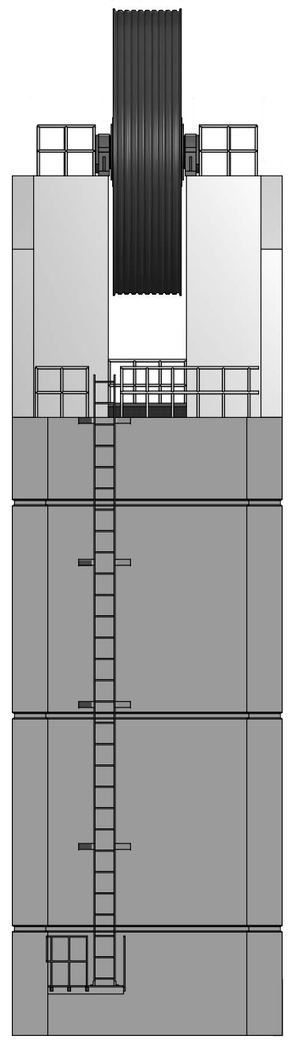

SOUTH TOWER FRONT ELEVATION
SCALE: NTS

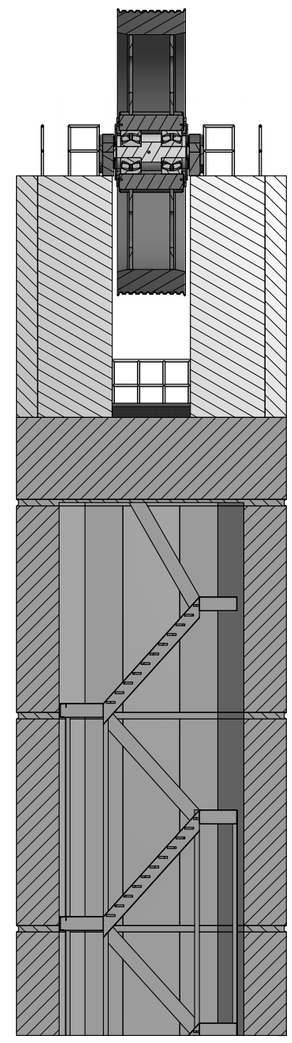

SECTION A–A
SCALE: NTS

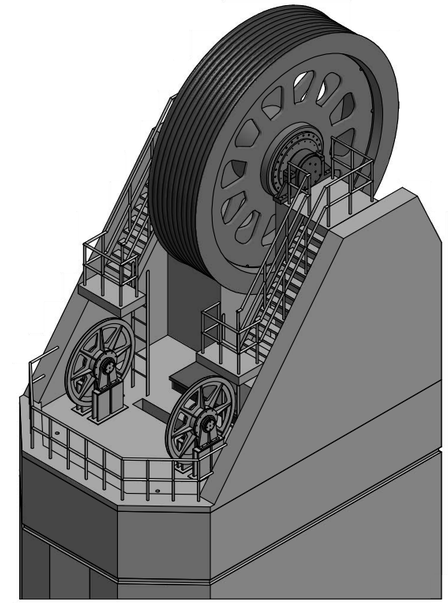

SOUTH TOWER ROOF ISOMETRIC VIEW 1
SCALE: NTS

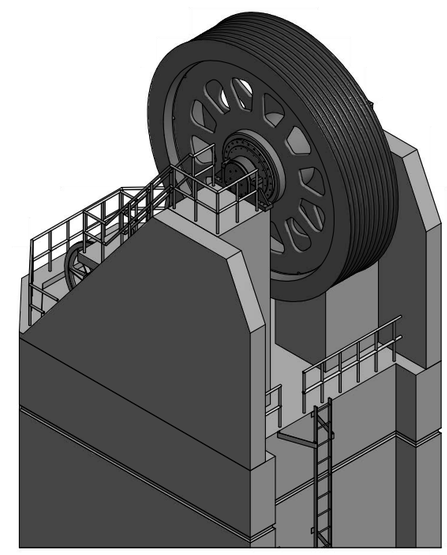

SOUTH TOWER ROOF ISOMETRIC VIEW 2
SCALE: NTS

PRELIMINARY – NOT FOR CONSTRUCTION

SARAH MILDRED LONG BRIDGE
PISCATAQUA RIVER
KITTERY, ME PORTSMOUTH, NH

TOWER ACCESS – TOWER TOP
3D VIEWS

	M.HAWKINS	BY	DATE
PROJ. MANAGER			
DESIGN-DETAILED		JRG	01/30/14
CHECKED-REVIEWED			
REVISIONS 1			
REVISIONS 2			
REVISIONS 3			
REVISIONS 4			
REVISIONS 5			
REVISIONS 6			
REVISIONS 7			
REVISIONS 8			

SIGNATURE
P.E. NUMBER
DATE

STATE OF MAINE
DEPARTMENT OF TRANSPORTATION

16710.00

PIN 16710.00

ME 3641 NH 251/108

BRIDGE PLANS

PREPARED BY:

SHEET NUMBER
V2
OF V6

Division: BRIDGE Username: common Date: 1/22/2014

Filename: P:\inventor\02818.02 - Sarah Mildred Long Bridge\10_Str\DWG Files\60% Submission\V3 - Tower Access Stairs.dwg

80% PLANS (2-14-2014)

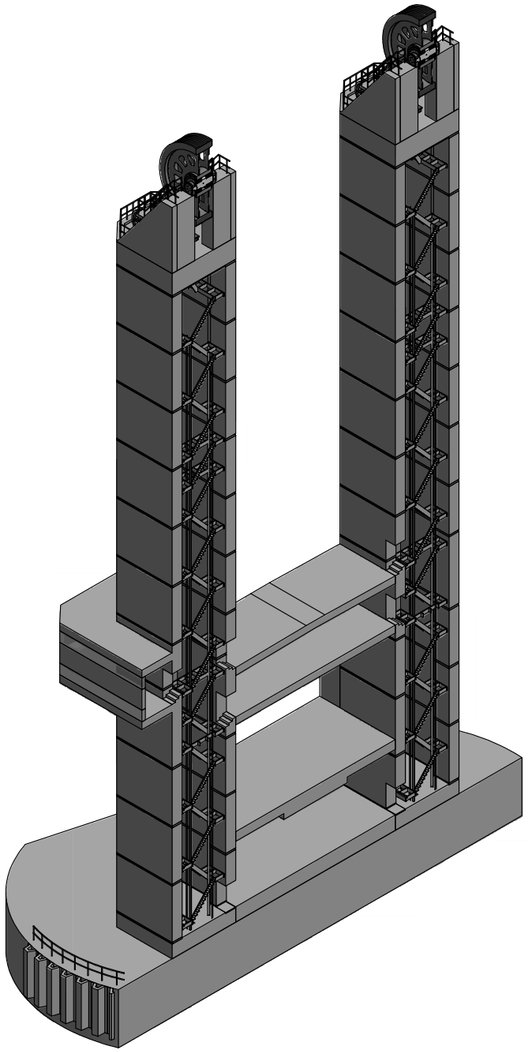

TOWER ISOMETRIC SECTION
SCALE: NTS

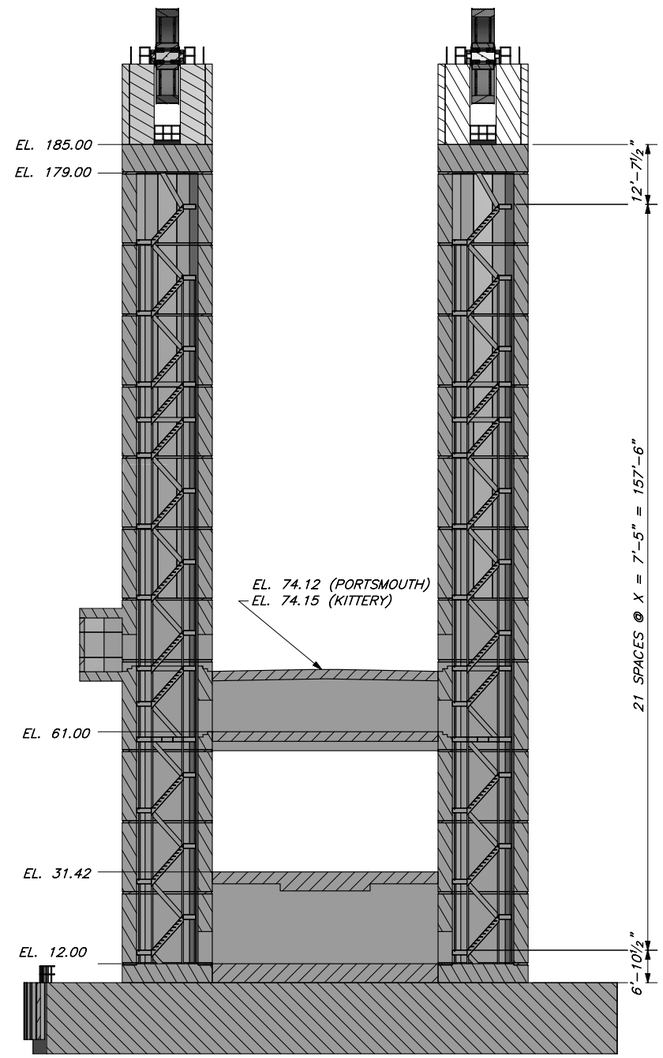

TOWER SECTION
SCALE: NTS

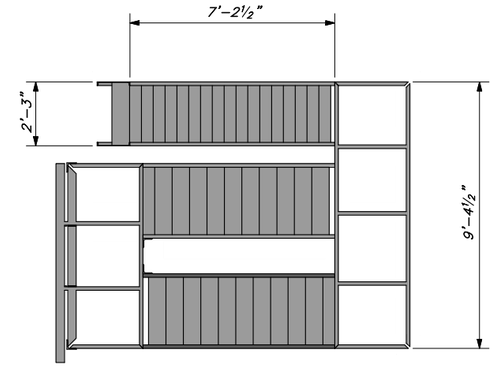

STAIRCASE VIEW @ TOP
SCALE: NTS

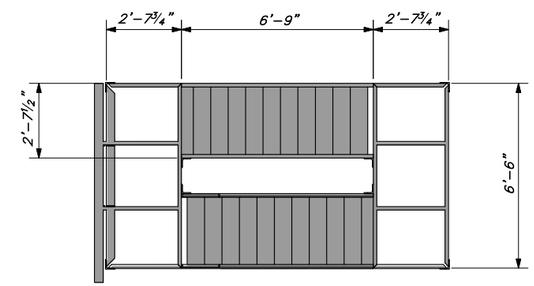

STAIRCASE TYPICAL SECTION
SCALE: NTS

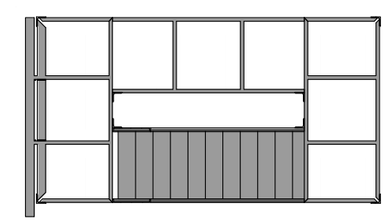

STAIRCASE SECTION @ CROSSOVER LANDING
SCALE: NTS

PRELIMINARY - NOT FOR CONSTRUCTION

PREPARED BY:

STATE OF MAINE
DEPARTMENT OF TRANSPORTATION

16710.00

PIN 16710.00

ME 3641 NH 251/108

BRIDGE PLANS

		BY	DATE
PROJ. MANAGER	M.HAWKINS		
DESIGN-DETAILED			
CHECKED-REVIEWED			
REVISIONS 1	UPDATED PIER SHAPE	JRG	01/30/14
REVISIONS 2			2/14/14
REVISIONS 3			
REVISIONS 4			
REVISIONS 5			
REVISIONS 6			
REVISIONS 7			
REVISIONS 8			

SIGNATURE

P.E. NUMBER

DATE

SARAH MILDRED LONG BRIDGE
PISCATAQUA RIVER
KITTERY, ME PORTSMOUTH, NH

TOWER ACCESS - STAIRS I
3D VIEWS

SHEET NUMBER

V3

OF V6

60% PLANS (2-14-2014)
Date:2/12/2014
Username: common
Division: BRIDGE
Filename: ...\001_LiftSpan_Plan_01.dgn

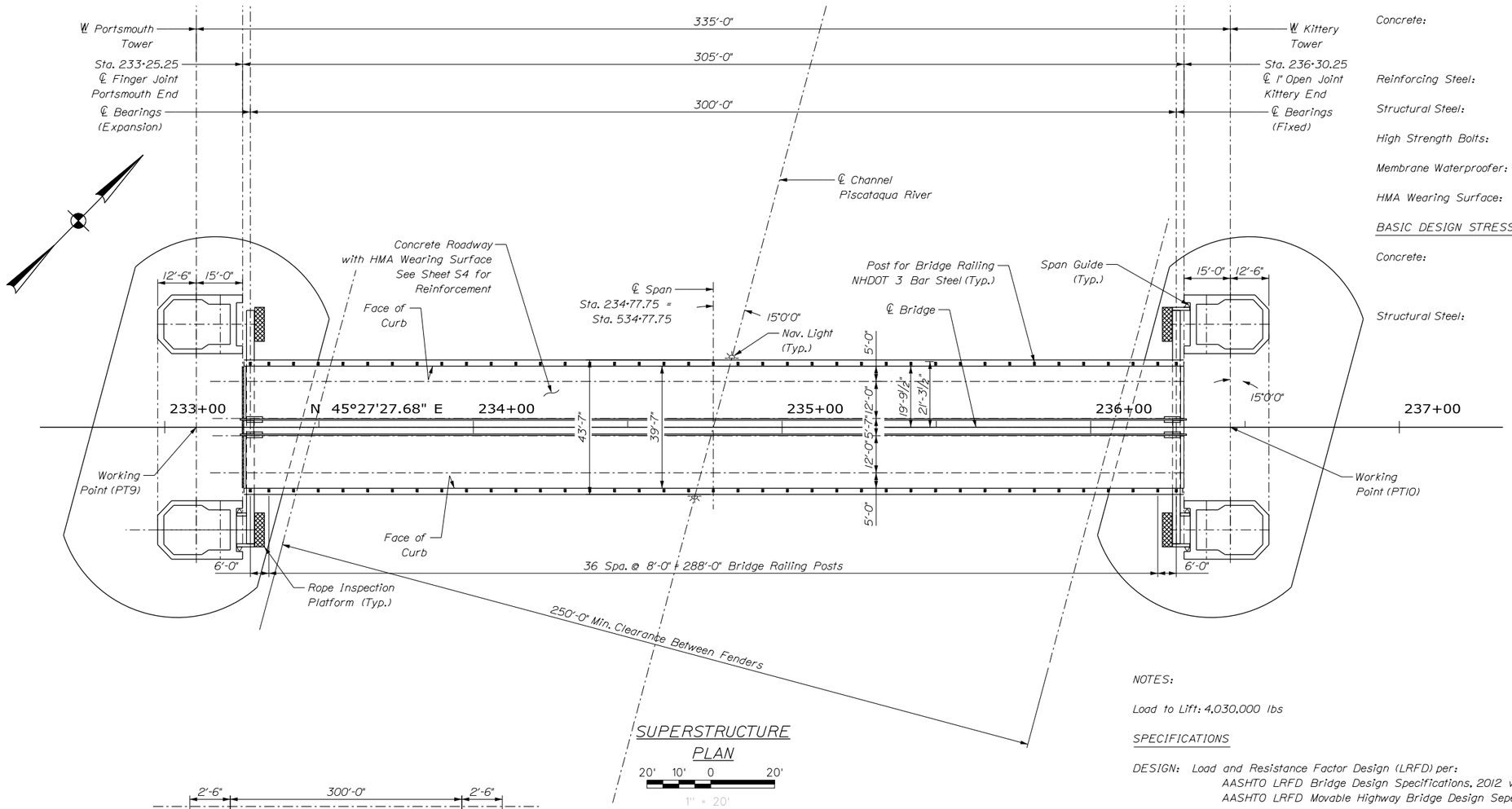

SUPERSTRUCTURE PLAN

20' 10' 0 20'
1" = 20'

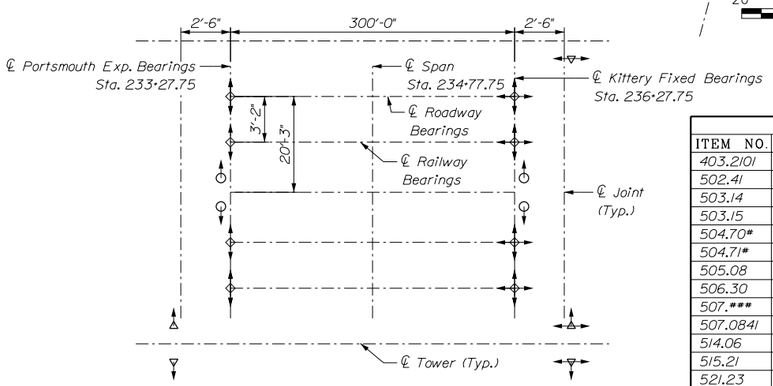

BEARING LOCATIONS & RESTRAINT DIRECTIONS

- Longitudinal Span Guide
- Transverse Span Guide
- Centering Device
- Bearing with Restraint Direction Indicated

ESTIMATED QUANTITIES - BOX GIRDER LIFT SPAN			
ITEM NO.	DESCRIPTION	QUANTITY	UNIT
403.2101	9.5mm Polymer Modified HMA	TON	155
502.41	Structural Concrete Superstructure Slab	CY	285
503.14	Epoxy-Coated Reinf Steel, Fab'd/ Deliv'd	LB	46,600
503.15	Epoxy-Coated Reinforcing Steel, Placing	LB	46,000
504.70*	Structural Steel, Fab and Deliver (Orthotropic)*	LS	1
504.71*	Structural Steel Erection, Orthotropic	LS	1
505.08	Shear Connectors	LS	1
506.30	Shop Coating of Structural Steel	LS	1
507.***	NHDOT 3 Bar, Steel Bridge Railing	LF	610
507.0841	Steel Pipe Handrailing	LF	750
514.06	Curing Box for Concrete Cylinders	EA	1
515.21	Protective Coating for Concrete Surfaces	SY	410
521.23	Expansion Device - Finger Joint	EA	2
521.33	Fabric Curtain for Finger Joint	EA	2
523.52	Bearing Installation	EA	8
523.5301	Steel Bearings, Fixed, Sliding Plate	EA	2
523.5302	Steel Bearings, Expansion, Sliding Plate	EA	2
523.5303	Steel Bearings, Fixed, Rocker	EA	2
523.5304	Steel Bearings, Expansion, Rocker	EA	2
647.***	115RE Embedded Rail Construction (Lift Span)	TF	305
651.XX	Railroad Appurtenances (Mitre-Rails)	LS	1
659.10	Mobilization	LS	1
1001.XX	Fiberglass Fairing	LS	1

*Lift Span Structural Steel Weight = 2,488,000 LBS

MATERIALS

Concrete:	Structural Superstructure Slab: Lightweight, Low Permeability Concrete Class A
	All Other:
Reinforcing Steel:	ASTM A615 Grade 60
Structural Steel:	All Material ASTM A709 Grade 50W (Metalized)
High Strength Bolts:	ASTM A325, Type 3 (Hot Dip Galvanized)
Membrane Waterproofer:	3/16" High Performance Membrane System
HMA Wearing Surface:	2 1/2" Lift 9.5mm Polymer Modified HMA

BASIC DESIGN STRESSES

Concrete:	Class A Concrete	f'c = 4,350 psi
	Class A Lightweight, Low Permeability Concrete	f'c = 4,350 psi
Structural Steel:	ASTM A709 Grade 50W	Fy = 50,000 psi
	ASTM A325	Fu = 120,000 psi

NOTES:

Load to Lift: 4,030,000 lbs

SPECIFICATIONS

DESIGN: Load and Resistance Factor Design (LRFD) per:
AASHTO LRFD Bridge Design Specifications, 2012 with latest interims.
AASHTO LRFD Movable Highway Bridge Design Sepecifications, 2007 with latest interims.

Allowable Stress Design (ASD) per:
AREMA Manual for Railway Engineering Specifications, 2013 with latest interims.

Maine Department of Transportation Bridge Design Guide, 2003 with latest updates.

DESIGN LOADING

Live Load: HL-93 [Maine DOT Modified] with Code Specified Impact
Live Load: Cooper E-80 with Code Modified Impact for Travel Speed
Live Load: Alternate Military (Navy) Railroad Load with Code Modified Impact for Travel Speed

- HL-93 Highway live load applied only to roadway with the span in the upper seated position.
- HL-93 Highway live load applied in two lanes only. Number of lanes governed by approach roadway width, not dictated by movable span roadway width.
- Cooper E-80 & Alt. Military (Navy) live load applied to railway with the span in the lower seated position.
- Cooper E-80 Travel Speed: 10mph

MOVABLE BRIDGE SPECIFIC DESIGN LOAD COMBINATIONS:

AASHTO LRFD Movable Highway Bridge Design Specifications strength load combinations Strength BV-1 & Strength BV-2. Load combination Strength BV-3 is excluded due to independent counterweight support location. Counterweight shall be supported with the span positioned on the Lower (Railroad) bearings during rope installation and replacement.

AREMA Manual for Railway Engineering Specifications service load combinations as follows:

CASE I:	Deadload • 20%	Span in any Position
CASE II • CASE IV:	Deadload • Liveload • Impact	Span Seated in Lower Position
CASE III • CASE IV:	Deadload • Liveload • Impact	Span Seated in Lower Position with Counterweight Independently Supported

PREPARED BY:

STATE OF MAINE
DEPARTMENT OF TRANSPORTATION
16710.00
PIN 16710.00
ME 3641 NH 251/108
BRIDGE PLANS

PROJ. MANAGER	JEFF POLSOM	BY	DATE
DESIGN-DETAILED			
CHECKED-REVIEWED			
REVISIONS 1			
REVISIONS 2			
REVISIONS 3			
REVISIONS 4			
REVISIONS 5			
REVISIONS 6			
REVISIONS 7			
REVISIONS 8			

SIGNATURE
P.E. NUMBER
DATE

PRELIMINARY - NOT FOR CONSTRUCTION

SARAH MILDRED LONG BRIDGE
PISCATAQUA RIVER
KITTERY, ME PORTSMOUTH, NH

GENERAL PLAN & TOWER FOOTING

SHEET NUMBER
S1
OF S20

60% PLANS (2-14-2014)
Date:2/12/2014
Username: common
Division: BRIDGE
Filename: ...\002_LiftSpan_ElevSect.dgn

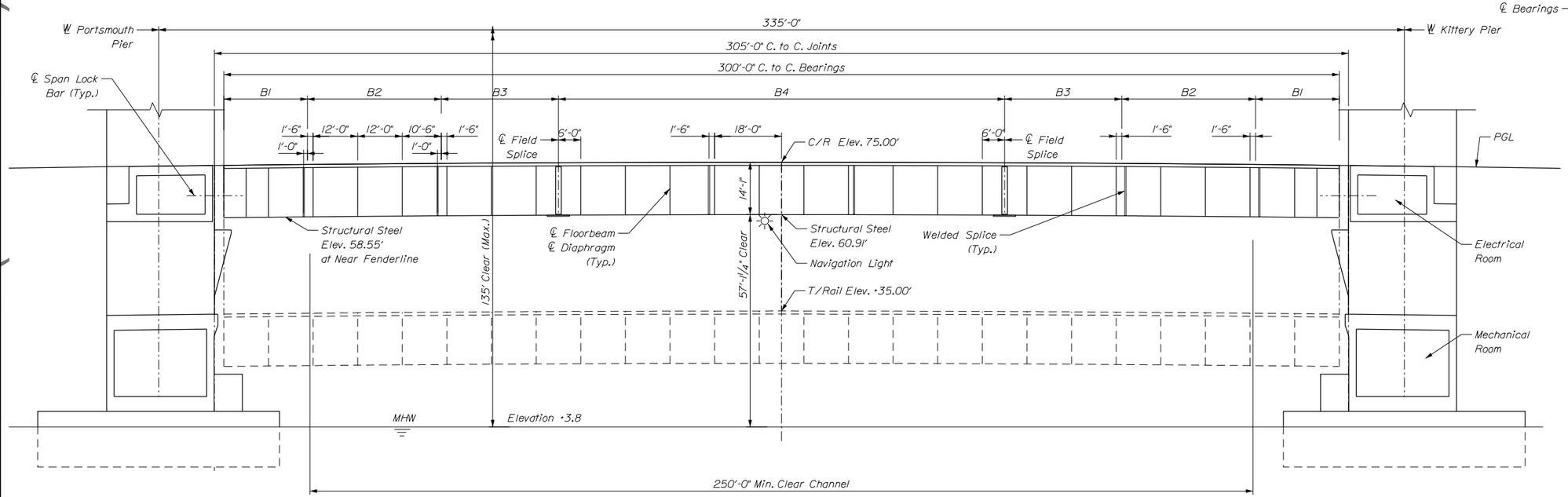

LIFT SPAN ELEVATION

1' 0 16' 32'
1/16" = 1'-0"

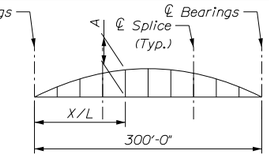

CAMBER DIAGRAM

X/L	A
0.1	-
0.2	-
0.3	-
0.4	-
0.5	-
0.6	-
0.7	-
0.8	-
0.9	-

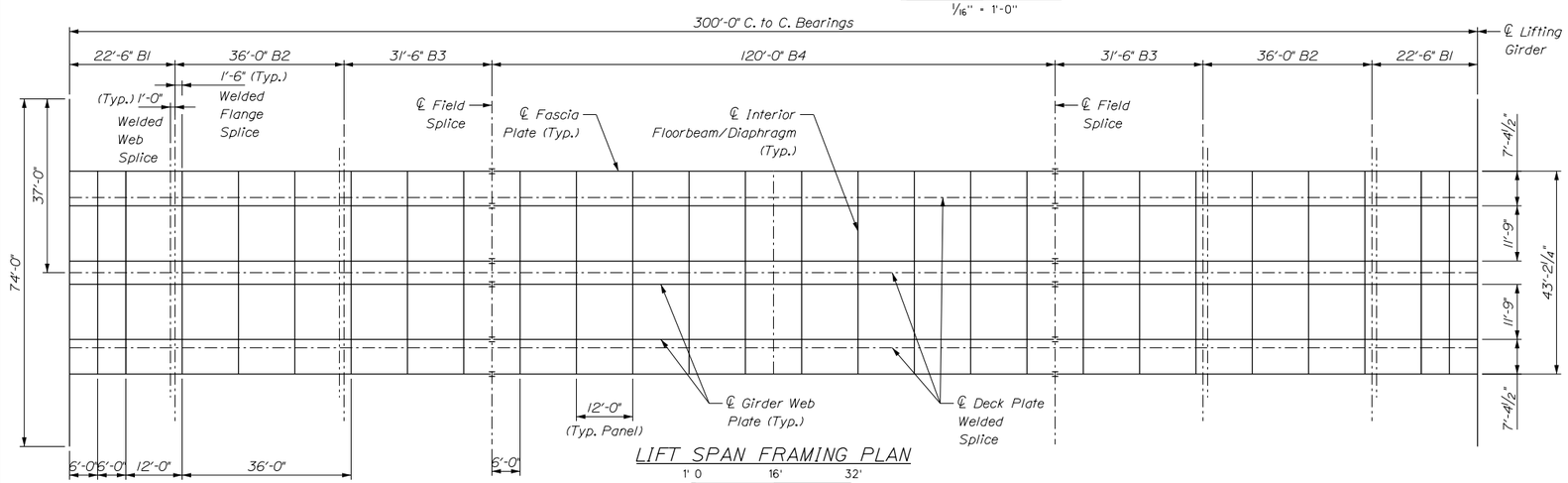

LIFT SPAN FRAMING PLAN

1' 0 16' 32'
1/16" = 1'-0"

LOAD & CAPACITY TABLE			
LOAD		MOMENT	SHEAR
AASHTO DESIGN LOADS			
Deadload	DC		
Deadload	DW		
Deadload	DO		
Deadload Impact (20%)	DAD		
Deadload Counterweight Supported	Dcw		
Machinery Operation	Mo		
Liveload (HL-93 Modified)	LL		
Liveload (Fatigue)	LL.fat		
Liveload Counterweight Supported	Lcw		
Dynamic Load Allowance	IM		
Dynamic Fatigue Load Allowance	IM.fat		
Governing Load Combination			
Design Load			
Section Provided			
Moment Capacity			
Moment Capacity			
Shear Capacity			
Utilization			
AREMA DESIGN LOADS			
Deadload			
Deadload Impact (20%)			
Deadload Counterweight Supported			
Liveload (E80)			
Liveload (Navy)			
Liveload Ctwt Supported (E80)			
Liveload Ctwt Supported (Navy)			
Rocking Effect on Liveload			
Impact on Liveload (E80)			
Impact on Liveload (Navy)			
Governing Load Combination			
Design Load			
Section Modulus			
Web Area			
Allowable Bending Stress			
Maximum Moment Capacity			
Allowable Shear Stress			
Shear Capacity at Bearings			
Utilization			

BOX GIRDER PROPERTIES				
	Section B1	Section B2	Section B3	Section B4
Top Flange (Deck Plate)	5/8"	5/8"	5/8"	5/8"
Interior Web Plate "A"	5/8"	5/8"	5/8"	5/8"
Interior Web Plate "B"	5/8"	5/8"	5/8"	5/8"
Bottom Flange	2 @ 1 1/4"x13'-3"	2 @ 1 1/2"x13'-3"	2 @ 1 3/4"x13'-3"	2 @ 2"x13'-3"
Section Modulus (S.M.)	76,945 in^3	88,382 in^3	99,723 in^3	111,086 in^3

STRUCTURAL STEEL NOTES

1. Camber ordinates, as shown, are computed to compensate for all dead load deflections and for the curvature of the finished grade profile.

2. No transverse butt weld splices will be allowed in the flange plates or web plates closer to the point of maximum positive moment than shown. Butt weld splices in flanges shall be not less than one foot from transverse butt welds in the web plates and no transverse web or flange butt welds shall be located within one foot of other transverse welds (e.g. connection plates to web welds) on either flange or web. No transverse butt weld splices will be allowed in areas of stress reversal.

3. Sections of flange plates or web plates between transverse shop splices or between a transverse shop splice and a field splice shall be not less than the length shown on the plans.

4. Bearing stiffeners shall be plumb after erection and dead loading of the structure. Intermediate web stiffeners, diaphragms, and floorbeam webs shall be plumb after erection and dead loading of the structure.

5. Crossframe or diaphragm connection plates shall be plumb.

6. Filler plates may be steel conforming to the requirements of ASTM A 709, Grade 36.

7. Faying surfaces at bolted connections shall be shop metallized and shall meet a Class B slip coefficient.

STATE OF MAINE
DEPARTMENT OF TRANSPORTATION

16710.00

PIN 16710.00

BRIDGE PLANS

ME 3641 NH 251/108

	SIGNATURE	DATE	BY
P.E. NUMBER			
PROJ. MANAGER JEFF POLSOM			
DESIGN-DETAILED			
CHECKED-REVIEWED			
REVISIONS 1			
REVISIONS 2			
REVISIONS 3			
REVISIONS 4			
REVISIONS 5			
REVISIONS 6			
REVISIONS 7			
REVISIONS 8			

PRELIMINARY - NOT FOR CONSTRUCTION

SARAH MILDRED LONG BRIDGE
PISCATAQUA RIVER
KITTERY, ME PORTSMOUTH, NH

GENERAL ELEVATION & SECTION

PREPARED BY:

SHEET NUMBER
S2
OF S20

60% PLANS (2-14-2014)
Date:2/12/2014
Username: common
Division: BRIDGE
Filename: ...\003_LiftSpan_BoxSection.dgn

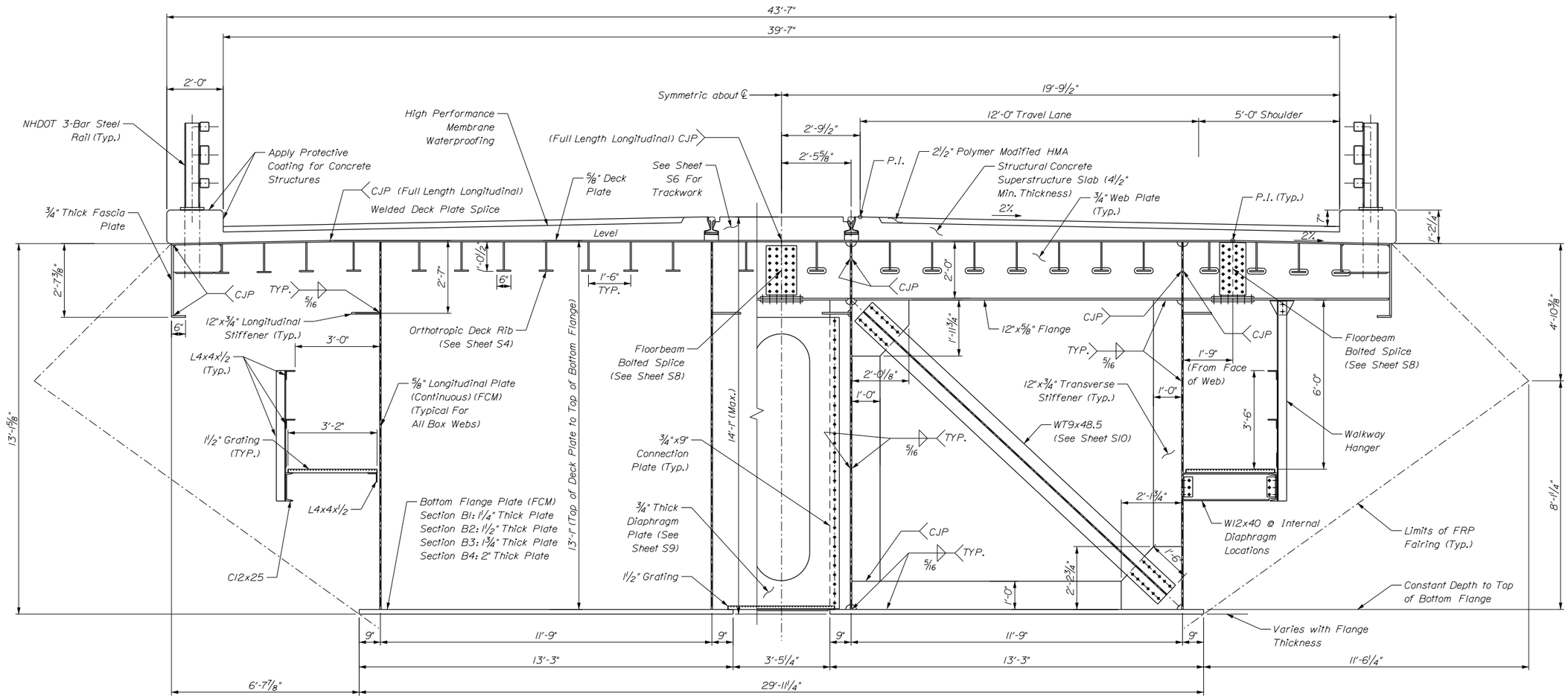

LIFT SPAN TYPICAL CROSS SECTION BETWEEN FLOORBEAMS

1' 6" 0 1' 2'
½" = 1'-0"

LIFT SPAN TYPICAL CROSS SECTION AT INTERMEDIATE FLOORBEAM

1' 6" 0 1' 2'
½" = 1'-0"

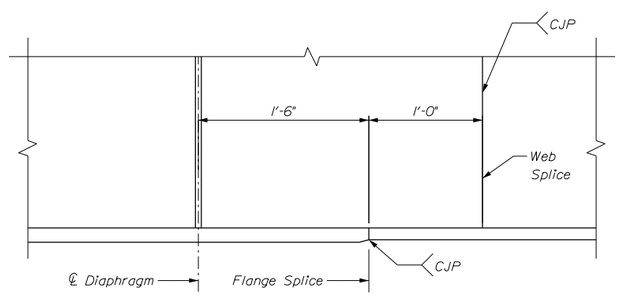

BOX GIRDER WELDED SPLICE

0 3" 6" 9" 12"
½" = 1'-0"

Notes:

1. The interior of the box girders and all diaphragms, bracing, and floorbeams within the boxes are to be painted white.
2. Platform grating included for payment under the items "Structural Steel, Fab. and Deliver (Orthotropic)" and "Structural Steel Erection, Orthotropic."
3. Box lighting and receptacles not shown.
4. Navigation lights not shown.
5. Structural concrete superstructure slab shall be lightweight, low permeability concrete.

STATE OF MAINE
DEPARTMENT OF TRANSPORTATION

16710.00

PIN 16710.00

ME 3641 NH 251/108

BRIDGE PLANS

PROJ. MANAGER	JEFF POLSOM	BY	DATE
DESIGN-DETAILED			
CHECKED-REVIEWED			
REVISIONS 1			
REVISIONS 2			
REVISIONS 3			
REVISIONS 4			
REVISIONS 5			
REVISIONS 6			
REVISIONS 7			
REVISIONS 8			

SIGNATURE

P.E. NUMBER

DATE

PRELIMINARY - NOT FOR CONSTRUCTION

SARAH MILDRED LONG BRIDGE
PISCATAQUA RIVER
PORTSMOUTH, NH
KITTERY, ME

LIFT SPAN
ORTHOTROPIC BOX

PREPARED BY:

SHEET NUMBER

S3

OF S20

60% PLANS (1-31-2014)

Filename: ...\002_60_Span Operating Machinery.dgn Division: BRIDGE Username: common Date:1/30/2014

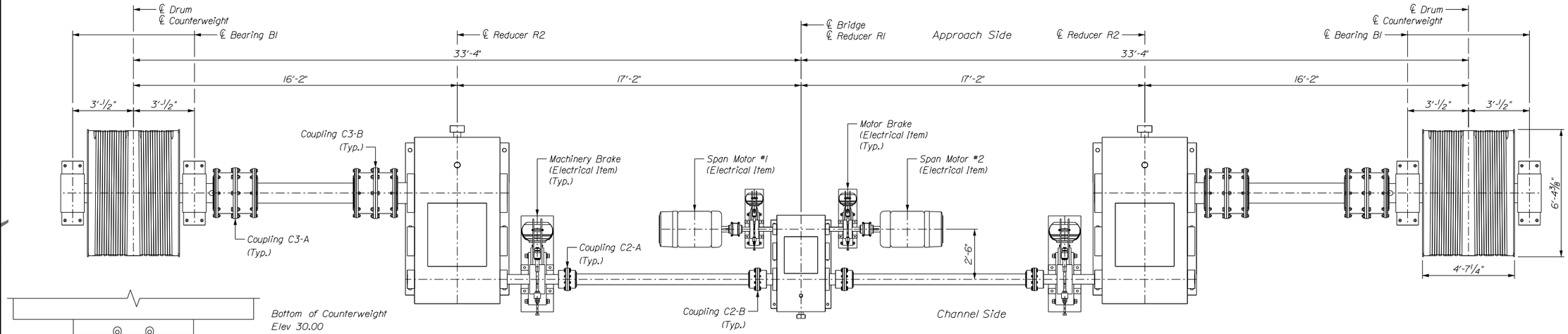

OPERATING MACHINERY - PLAN VIEW

(2) Assemblies Required

1' 6" 0 1' 2'
1/2" = 1'-0"

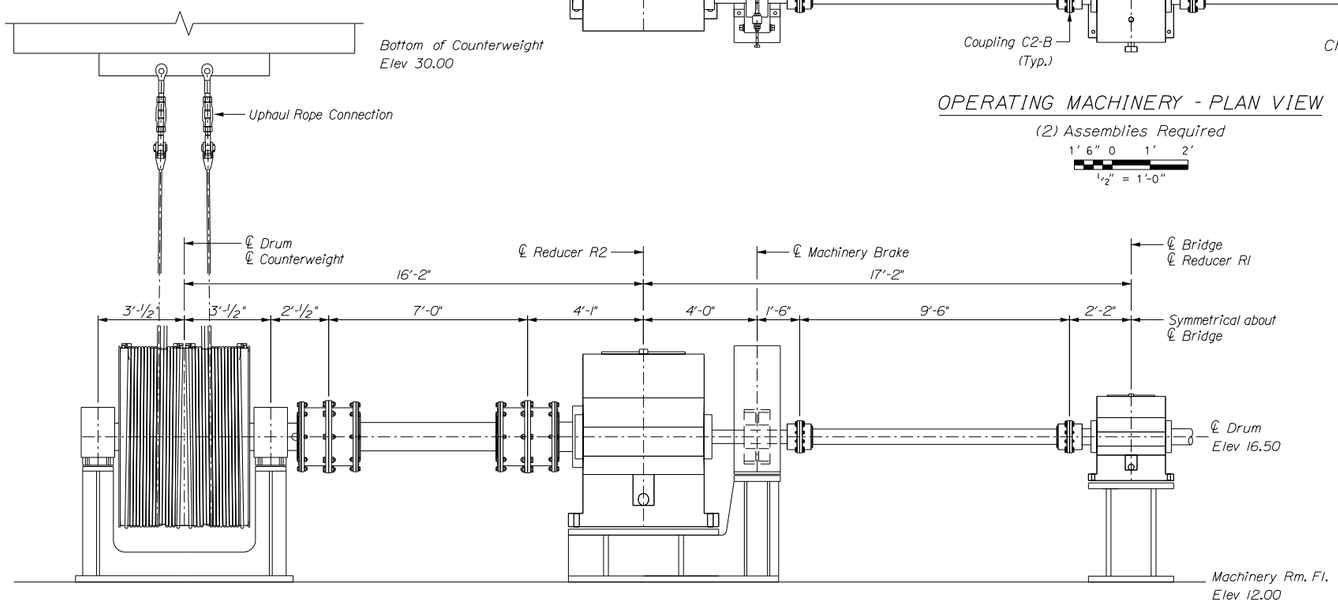

OPERATING MACHINERY - ELEVATION VIEW

Input Machinery Not Shown

1' 6" 0 1' 2'
1/2" = 1'-0"

OPERATING MACHINERY TABLE		
Mark	Qty.	Description
Coupling CI	4	Falk Steelflex Grid Coupling Type T10, Size 1090T
Coupling C2	8	Falk Single Engagement Gear Coupling Type G52, Size 1045T
Coupling C3	8	Falk Single Engagement Gear Coupling Type G20, Size 1110G
Reducer RI	2	Double Reduction Speed Reducer 125 hp, 1170 rpm, Ratio 20:1, S.F. = 1.5
Reducer R2	4	Double Reduction Speed Reducer 63 hp, 58.5 rpm, Ratio 25:1, S.F. = 1.5
Motor Brake	4	Mondel Mill Duty Shoe Brake 13" BT/E - ED50/6S
Machinery Brake	4	Mondel Mill Duty Shoe Brake 23" BT/E - ED201/6S
Bearing BI	8	Timken Pillow Block Bearing Type SDAFS23064K

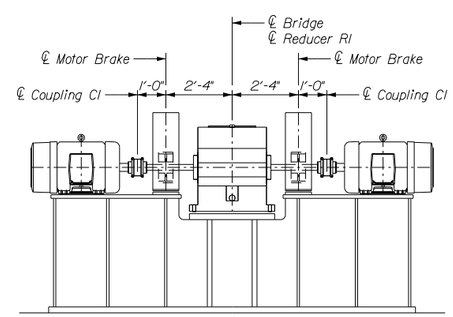

OPERATING MACHINERY - ELEVATION VIEW

Output Machinery Not Shown

1' 6" 0 1' 2'
1/2" = 1'-0"

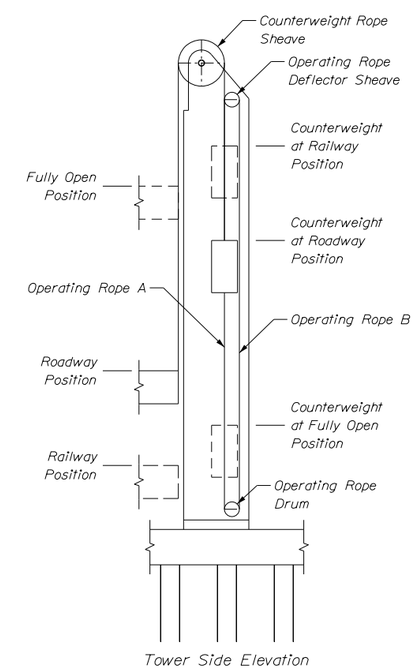

OPERATING MACHINERY - SCHEMATIC

Not to Scale

STATE OF MAINE
DEPARTMENT OF TRANSPORTATION

16710.00

PIN 16710.00

ME 3641 NH 251/108

BRIDGE PLANS

	BY	DATE
PROJ. MANAGER	JEFF FOLSOM	
DESIGN-DETAILED	XXXX	XXXX
CHECKED-REVIEWED	XXXX	XXXX
REVISIONS 1	XXXX	XXXX
REVISIONS 2	XXXX	XXXX
REVISIONS 3	XXXX	XXXX
REVISIONS 4	XXXX	XXXX
REVISIONS 5	XXXX	XXXX
REVISIONS 6	XXXX	XXXX
REVISIONS 7	XXXX	XXXX
REVISIONS 8	XXXX	XXXX

SIGNATURE

P.E. NUMBER

DATE

PRELIMINARY - NOT FOR CONSTRUCTION

SARAH MILDRED LONG BRIDGE
PISCATAQUA RIVER
PORTSMOUTH, NH
KITTERY, ME

OPERATING MACHINERY ASSEMBLY

PREPARED BY:

SHEET NUMBER

M2

OF M20

60% PLANS (1-31-2014)
Date:1/30/2014 Username: common Division: BRIDGE Filename: ...\003_60_Operating Rope Drum Assembly.dgn

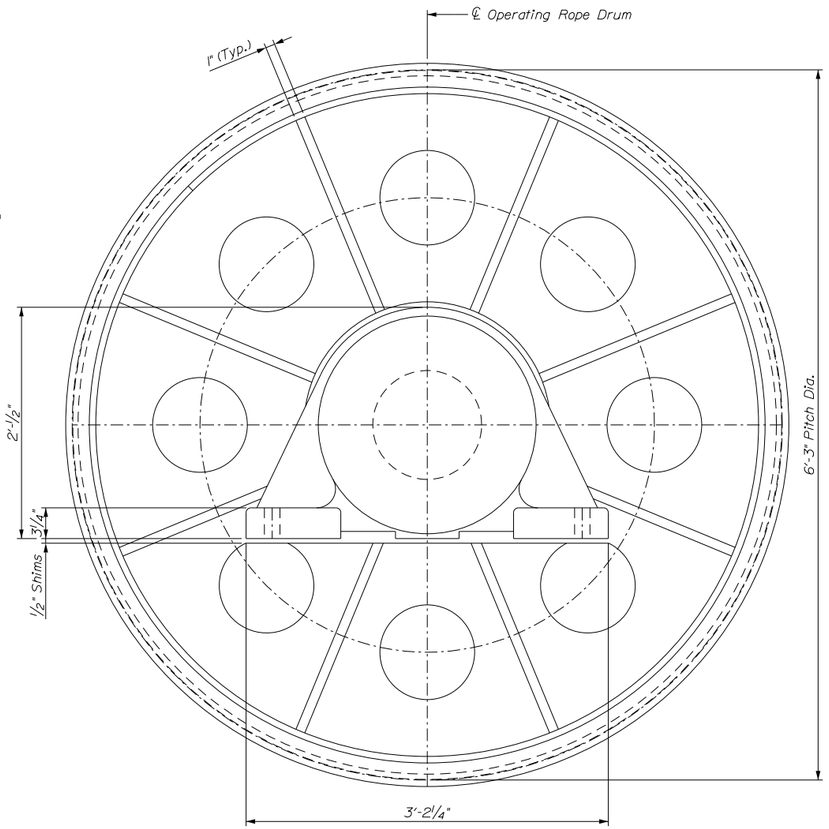

SIDE ELEVATION

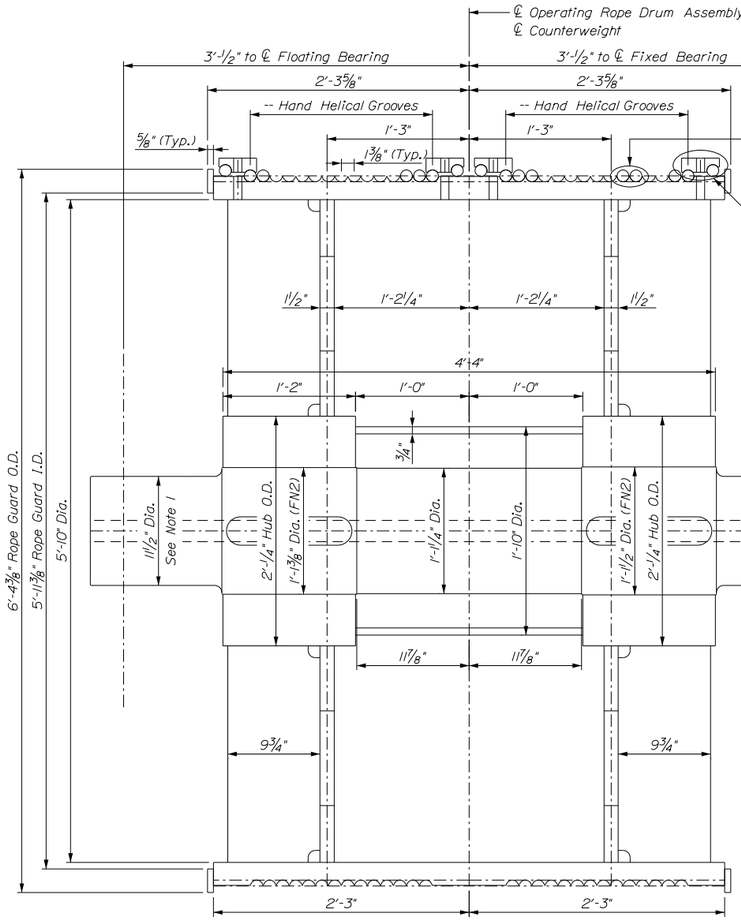

DEVELOPED SECTION

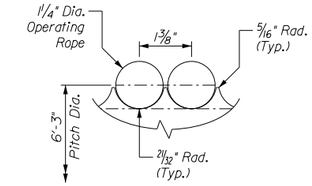

ROPE GROOVE DETAIL

0 3"
6" = 1'-0"

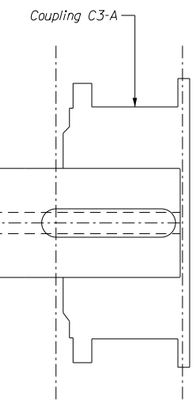

OPERATING ROPE DRUM ASSEMBLY - TABLE		
Mark	Qty.	Description
Operating Rope A	8	1 1/4" Dia., 6 Strand Standard - XIP IWRG Drawn Galvanized, MBF = 143,820 lbs., 218'
Operating Rope B	8	1 1/4" Dia., 6 Strand Standard - XIP IWRG Drawn Galvanized, MBF = 143,820 lbs., 425'

Notes:

1. All Bearing and Seal Related Dimensions, Tolerances and Surface Finishes Shall be as per Manufacturer Recommendations.

2. All Wire Ropes Shall be Pre-Stretched to Remove Constructional Stretch.

3. Operating Rope Sockets are to be of Equal or Greater Breaking Strength of the Operating Ropes.

4. Operating Ropes "A" Supported by Right Hand Helical Grooves to be Left Lay Ropes. Operating Ropes "A" Supported by Left Hand Helical Grooves to be Right Lay Ropes. Operating Ropes "B" Supported by Right Hand Helical Grooves to be Right Lay Ropes. Operating Ropes "B" Supported by Left Hand Helical Grooves to be Left Lay Ropes.

5. Sockets Shall be Machined as Necessary to Achieve Indicated Dimensions.

6. Operating Ropes are to be Pretensioned to -- lbf Each.

OPERATING ROPE DRUM ASSEMBLY

0 3" 6" 9" 12"
1 1/2" = 1'-0"

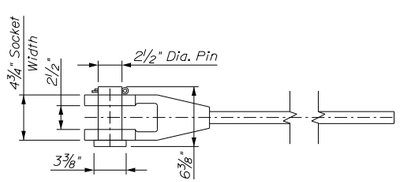

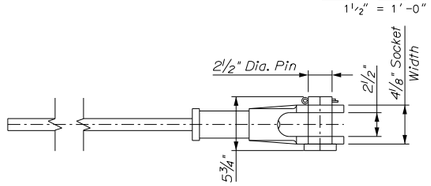

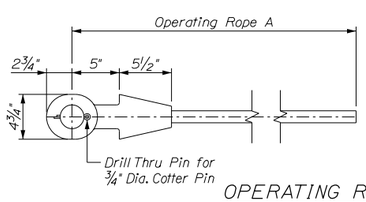

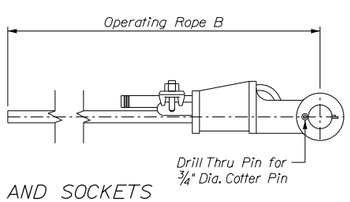

Span End
(Bottom of Counterweight)

OPERATING ROPES AND SOCKETS

(8) Required Rope A
(8) Required Rope B

Counterweight End
(Top of Counterweight)

0 3" 6" 9" 12"
1 1/2" = 1'-0"

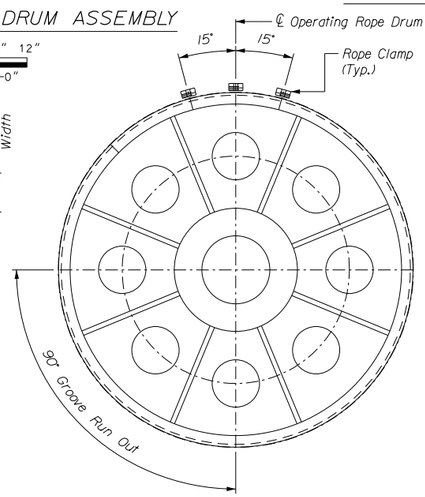

GROOVE STOP DETAIL

1' 6" 0 1' 2'
3/4" = 1'-0"

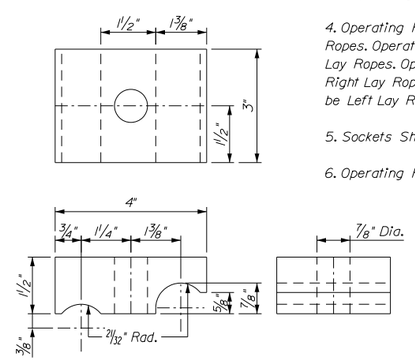

ROPE CLAMP DETAIL

(48) Assemblies Required

0 3"
6" = 1'-0"

PRELIMINARY - NOT FOR CONSTRUCTION

STATE OF MAINE
DEPARTMENT OF TRANSPORTATION

16710.00

PIN 16710.00

ME 3641 NH 251/108

BRIDGE PLANS

		BY	DATE
PROJ. MANAGER	JEFF FOLSOM		
DESIGN-DETAILED	XXXX	XXXX	XXXX
CHECKED-REVIEWED	XXXX	XXXX	XXXX
REVISIONS 1	XXXX		XXXX
REVISIONS 2	XXXX		XXXX
REVISIONS 3	XXXX		XXXX
REVISIONS 4	XXXX		XXXX
REVISIONS 5	XXXX		XXXX
REVISIONS 6	XXXX		XXXX
REVISIONS 7	XXXX		XXXX
REVISIONS 8	XXXX		XXXX

SIGNATURE

P.E. NUMBER

DATE

SARAH MILDRED LONG BRIDGE
PISCATAQUA RIVER
KITTERY, ME PORTSMOUTH, NH

OPERATING ROPE DRUM ASSEMBLY

PREPARED BY:

SHEET NUMBER

M3

OF M20

60% PLANS (1-31-2014)
Date:1/30/2014
Username: common
Division: BRIDGE
Filename: ...\004_60_Operating Rope Deflector Sheave Assembly.dgn

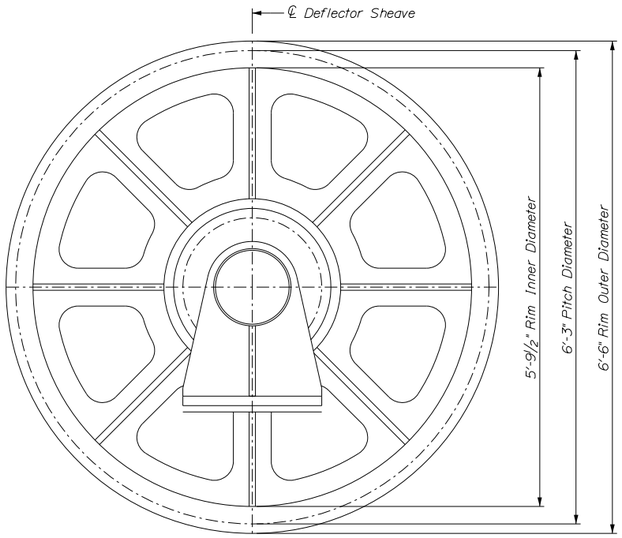

SIDE ELEVATION

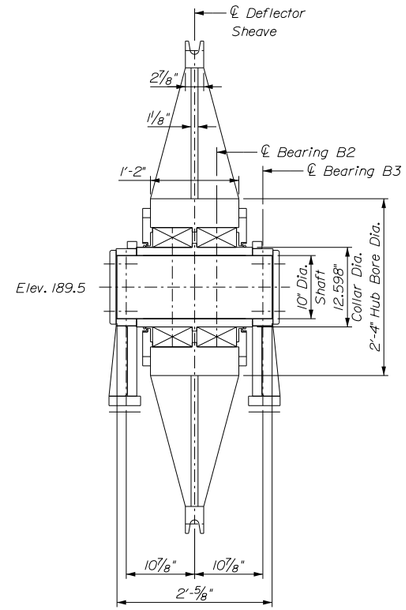

DEVELOPED SECTION

OPERATING ROPE DEFLECTOR SHEAVE ASSEMBLY - TABLE		
Mark	Qty.	Description
Bearing B2	16	Timken Spherical Roller Bearing Part Number 24064YMD
Bearing B3	16	Custom Fixed Bearing, ASTM A 709, Gr. 50

OPERATING ROPE - DEFLECTOR SHEAVE ASSEMBLY

(8) Assemblies Required

1' 6" 0 1' 2'

1" = 1'-0"

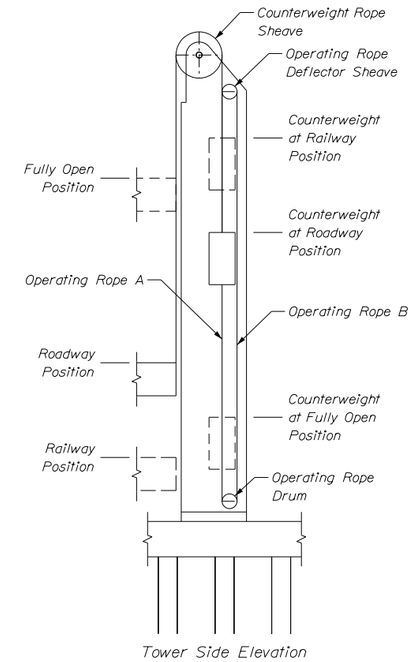

OPERATING MACHINERY - SCHEMATIC

Not to Scale

PRELIMINARY - NOT FOR CONSTRUCTION

STATE OF MAINE
DEPARTMENT OF TRANSPORTATION

16710.00

PIN 16710.00

BRIDGE PLANS

ME 3641 NH 251/108

	BY	DATE
PROJ. MANAGER	JEFF FOLSOM	
DESIGN-DETAILED	XXXX	XXXX
CHECKED-REVIEWED	XXXX	XXXX
REVISIONS 1	XXXX	XXXX
REVISIONS 2	XXXX	XXXX
REVISIONS 3	XXXX	XXXX
REVISIONS 4	XXXX	XXXX
REVISIONS 5	XXXX	XXXX
REVISIONS 6	XXXX	XXXX
REVISIONS 7	XXXX	XXXX
REVISIONS 8	XXXX	XXXX

SIGNATURE
P.E. NUMBER
DATE

SARAH MILDRED LONG BRIDGE
PISCATAQUA RIVER
KITTERY, ME PORTSMOUTH, NH

OPERATING ROPE DEFLECTOR SHEAVE ASSEMBLY

PREPARED BY:

SHEET NUMBER

M4

OF M20

60% PLANS (1-31-2014)
Filename: ...\006_60_Counterweight Rope Sheave Assembly.dgn Division: BRIDGE Username: common Date:1/30/2014

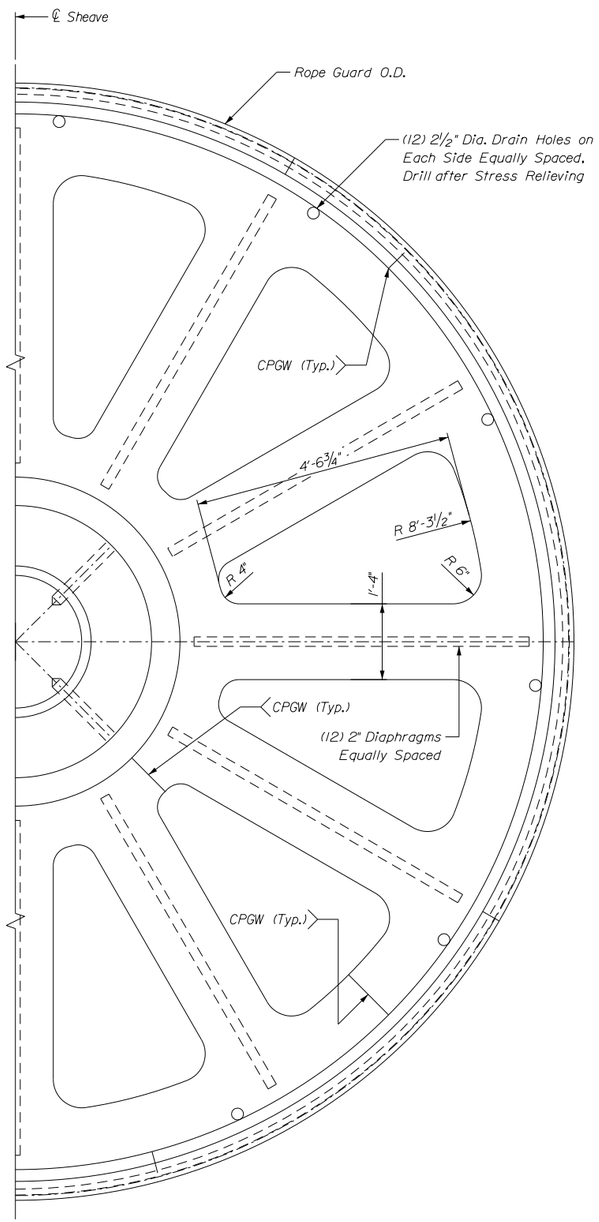

SIDE ELEVATION

(Bearing B4 Not Shown For Clarity)

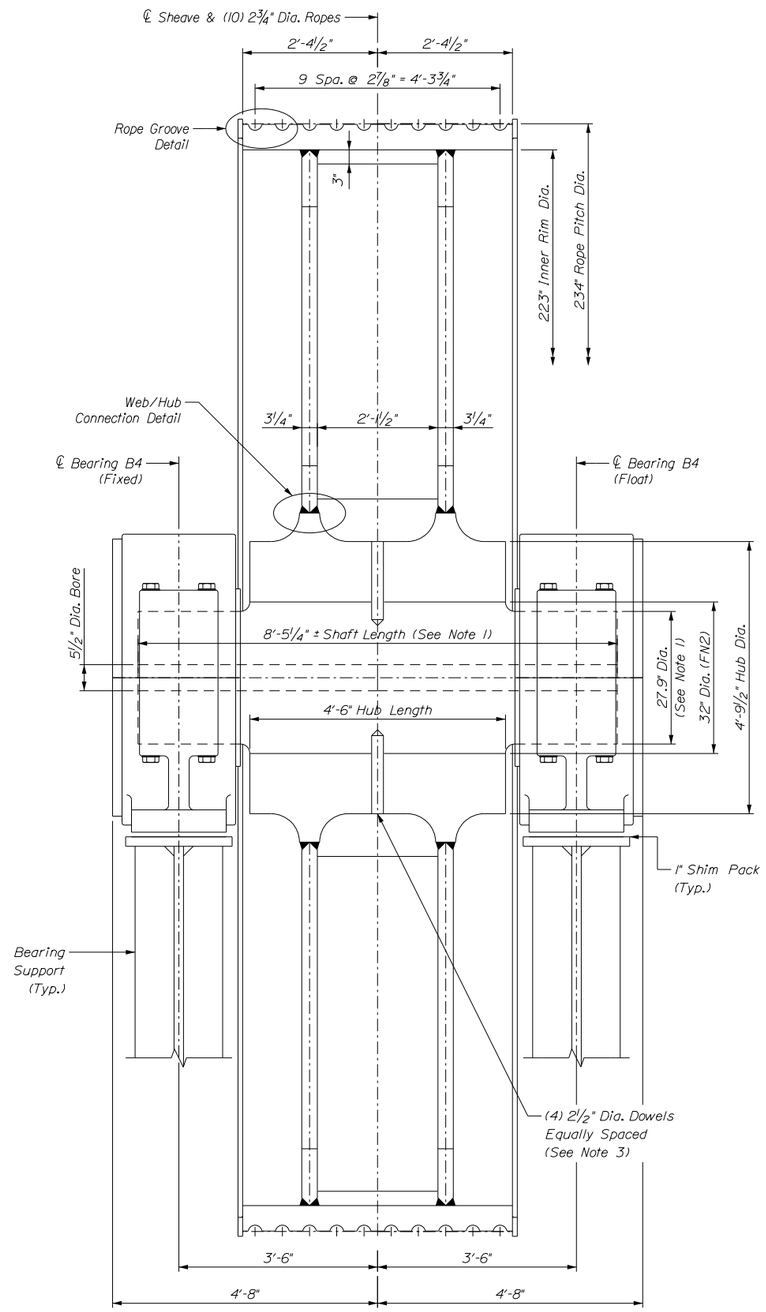

DEVELOPED SECTION

SHEAVE ASSEMBLY

(4) Assemblies Required

1' 6" 0 1' 2'

¾" = 1'-0"

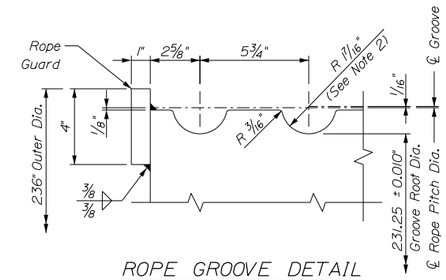

ROPE GROOVE DETAIL

0 3" 6"

3" = 1'-0"

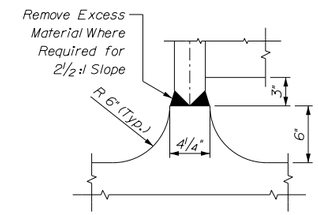

WEB/HUB CONNECTION DETAIL

0 3" 6" 9" 12"

1½" = 1'-0"

COUNTERWEIGHT ROPE SHEAVE ASSEMBLY - TABLE

Mark	Qty.	Description
Long Ctw. Ropes	24	2¾" Dia., 8 Strand Compacted - 1960GR IWRC Drawn Galvanized, MBF = 865,930 lbs., 234.5'
Short Ctw. Ropes	16	2¾" Dia., 8 Strand Compacted - 1960GR IWRC Drawn Galvanized, MBF = 865,930 lbs., 232.0'
Spherical Roller Bearing B4 (Fixed)	4	Timken Spherical Roller Bearing Part Number 241/710KYMD
Spherical Roller Bearing B4 (Float)	4	Timken Spherical Roller Bearing Part Number 241/710KYMD

Notes:

1. Dimensions are Nominal. Exact Dimensions to be Determined in Coordination with Sheave Bearings and Approved by the Bearing Manufacturer and the Engineer.

2. The Finished Radii of the Rope Grooves shall be Within the Limits of 1.436" - 1.439".

3. Hub Dowels shall have Drive Fit and Air Bleed Grooves. Peen Hub over Dowels.

COUNTERWEIGHT ROPE SHEAVE ASSEMBLY - MATERIAL LIST

Mark	Material	Designation
Sheave Shaft	Forged Carbon Steel	ASTM A668 Class D
Sheave Hub	Forged Carbon Steel (Weldable)	ASTM A668 Class D (0.35C Maximum)
Sheave Dowels	Forged Carbon Steel	ASTM A668 Class K
Other Sheave Components	Structural Steel	ASTM A36

Sheave Hub and Other Sheave Component Materials shall be Charpy V-Notch Tested to achieve 15 Ft.-Lbs. at 40 Deg. F.

STATE OF MAINE
DEPARTMENT OF TRANSPORTATION

16710.00

PIN 16710.00

ME 3641 NH 251/108

BRIDGE PLANS

PROJ. MANAGER	JEFF FOLSOM	BY	DATE
DESIGN-DETAILED	XXXX	XXXX	XXXX
CHECKED-REVIEWED	XXXX	XXXX	XXXX
REVISIONS 1	XXXX		XXXX
REVISIONS 2	XXXX		XXXX
REVISIONS 3	XXXX		XXXX
REVISIONS 4	XXXX		XXXX
REVISIONS 5	XXXX		XXXX
REVISIONS 6	XXXX		XXXX
REVISIONS 7	XXXX		XXXX
REVISIONS 8	XXXX		XXXX

SIGNATURE

P.E. NUMBER

DATE

PRELIMINARY - NOT FOR CONSTRUCTION

SARAH MILDRED LONG BRIDGE
PISCATAQUA RIVER
PORTSMOUTH, NH
KITTERY, ME

COUNTERWEIGHT ROPE SHEAVE ASSEMBLY

PREPARED BY:

SHEET NUMBER

M6

OF M20

60% PLANS (1-31-2014)
Date:1/30/2014
Username: common
Division: BRIDGE
Filename: ...\E3_GeneralElectricalPlan.dgn

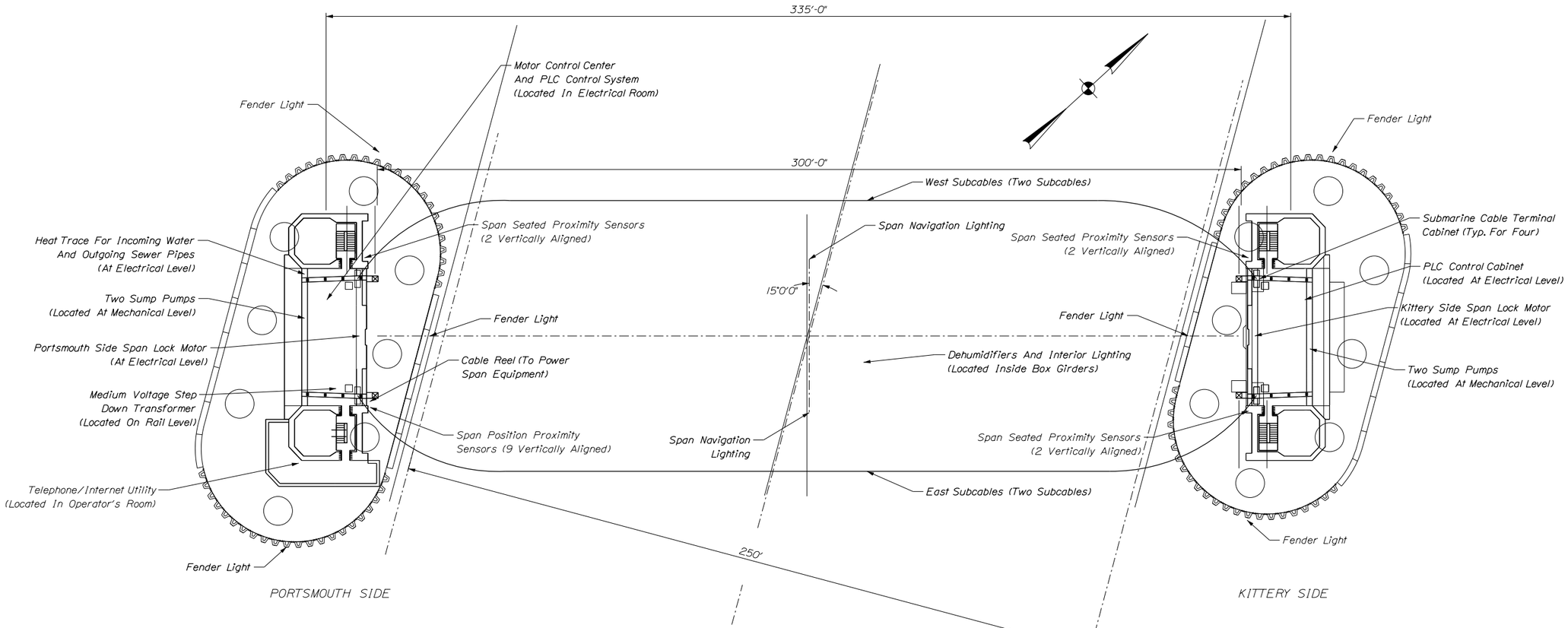

BRIDGE ELECTRICAL PLAN

20' 10' 0 20'

SCALE: 1'' = 20'-0"

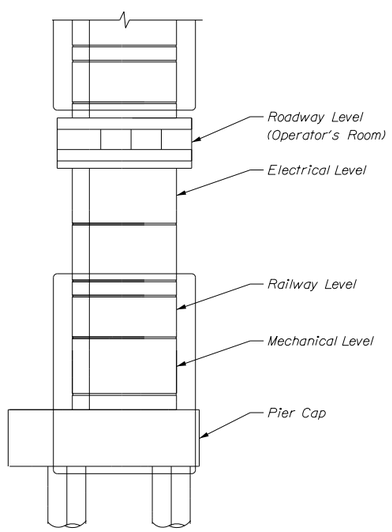

PORTSMOUTH TOWER ELECTRICAL ELEVATION

(KITTERY SIDE SIMILAR, WITHOUT CONTROL ROOM)

20' 10' 0 20'

SCALE: 1'' = 20'-0"

Notes:

1. For CCTV Cameras And Layout. See CCTV Details Sheet 1.
2. For Lighting Protection Layout. See Lighting Protection Sheet.
3. For Traffic Signals & Protection Devices And Standby Generator. See Conduit Layout Sheet.

STATE OF MAINE
DEPARTMENT OF TRANSPORTATION

16710.00

PIN 16710.00

ME 3641 NH 251/108

BRIDGE PLANS

PROJ. MANAGER	JEFF FOLSOM	BY	DATE
DESIGN-DETAILED			
CHECKED-REVIEWED			
REVISIONS 1			
REVISIONS 2			
REVISIONS 3			
REVISIONS 4			
REVISIONS 5			
REVISIONS 6			
REVISIONS 7			
REVISIONS 8			

SIGNATURE

P.E. NUMBER

DATE

PRELIMINARY - NOT FOR CONSTRUCTION

SARAH MILDRED LONG BRIDGE
PISCATAQUA RIVER
PORTSMOUTH, NH
KITTERY, ME

GENERAL ELECTRICAL PLAN

PREPARED BY:

SHEET NUMBER

E3

OF E44

60% PLANS (2-14-2014)
Date:2/14/2014
Username: blyon
Division: HIGHWAY
Filename: ...\Sheet Files\002_TYPICAL.dgn

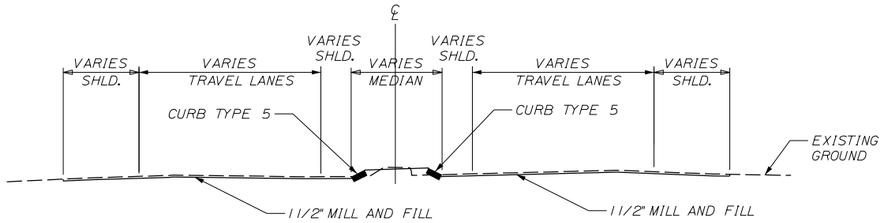

MILL AND FILL
ROUTE 1 BYPASS - KITTERY
STA 251+50 TO STA 255+78

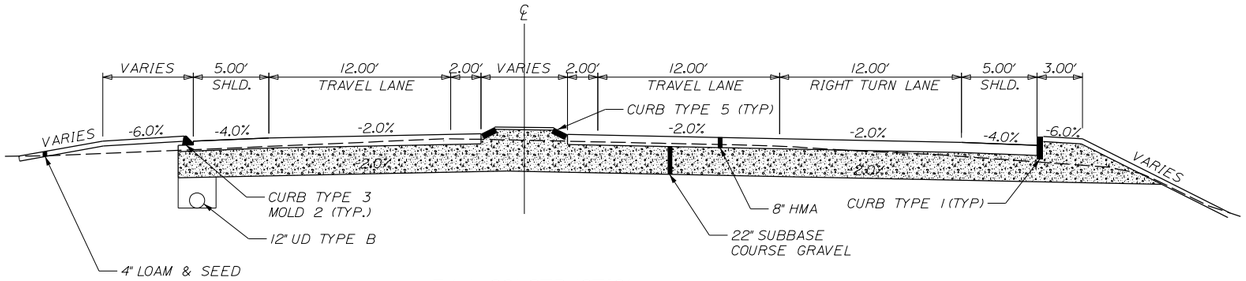

FULL CONSTRUCTION
ROUTE 1 BYPASS - KITTERY
NORMAL
STA 247+50 TO STA 248+50

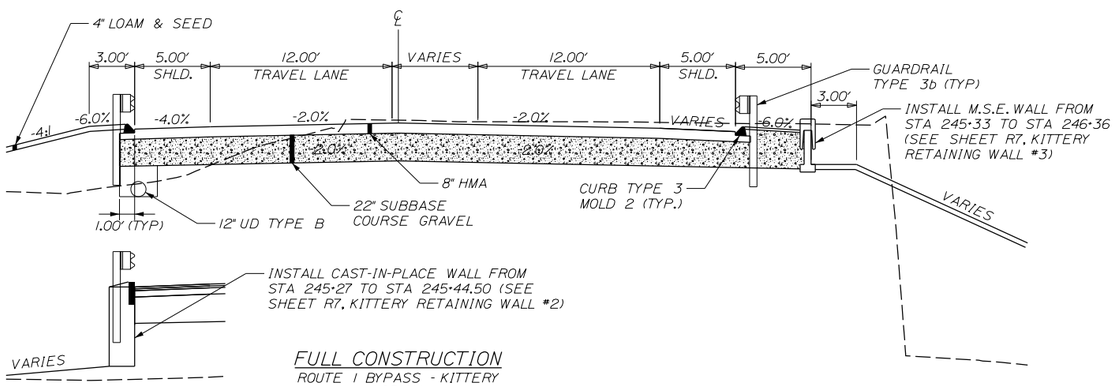

FULL CONSTRUCTION
ROUTE 1 BYPASS - KITTERY
NORMAL
STA 245+50 TO STA 246+50

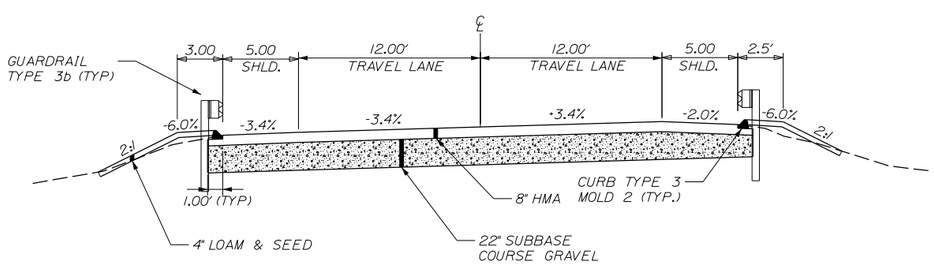

* SEE SUPERELEVATION TABLE

FULL CONSTRUCTION
ROUTE 1 BYPASS - PORTSMOUTH
SUPERELEVATED

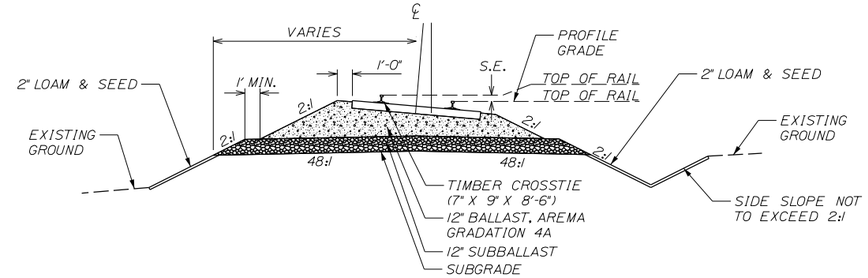

SINGLE TRACK ON CURVE
NORMAL

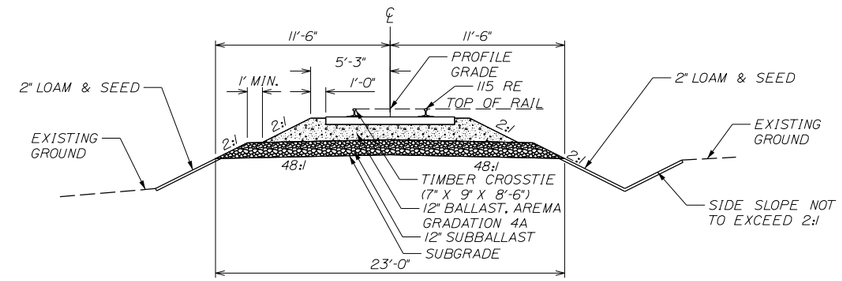

SINGLE TRACK ON TANGENT
NORMAL

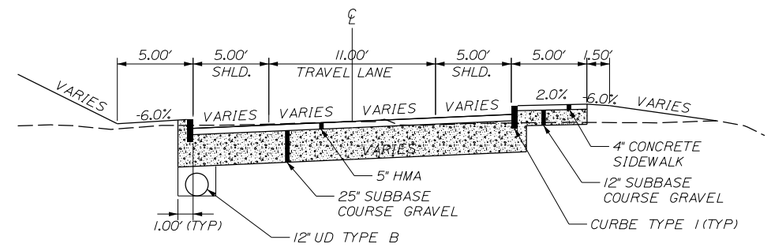

FULL CONSTRUCTION
BRIDGE STREET - KITTERY
STA 312+00 TO STA 317+00

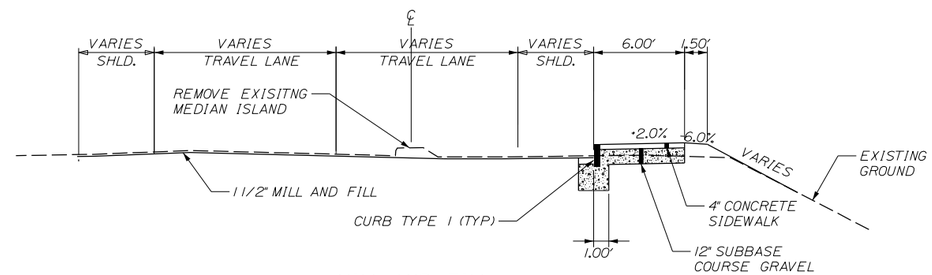

MILL AND FILL
BRIDGE STREET - KITTERY
STA 302+14 TO STA 311+00

PRELIMINARY - NOT FOR CONSTRUCTION

PREPARED BY: SEBAGO TECHNICS

STATE OF MAINE
DEPARTMENT OF TRANSPORTATION

16710.00

PIN 16710.00

ME 3641 NH 251/108

ROADWAY PLANS

PROJ. MANAGER	W.J. ROHLDER	BY	DATE
DESIGN-DETAILED	B. LYON	B. LYON	2-14-14
CHECKED-REVIEWED	S. SAWYER	S. SAWYER	2-14-14
REVISIONS 1			
REVISIONS 2			
REVISIONS 3			
REVISIONS 4			
REVISIONS 5			
REVISIONS 6			
REVISIONS 7			
REVISIONS 8			

SIGNATURE

P.E. NUMBER

DATE

SARAH MILDRED LONG BRIDGE
PISCATAQUA RIVER
KITTERY, ME PORTSMOUTH, NH

ROADWAY AND RAILROAD TYPICAL SECTIONS I

SHEET NUMBER

R1

OF R93

Filename: ...\Sheet Files\010_HDPlan1.dgn
Division: HIGHWAY
Username: blyon
Date:2/14/2014

60% PLANS (2-14-2014)

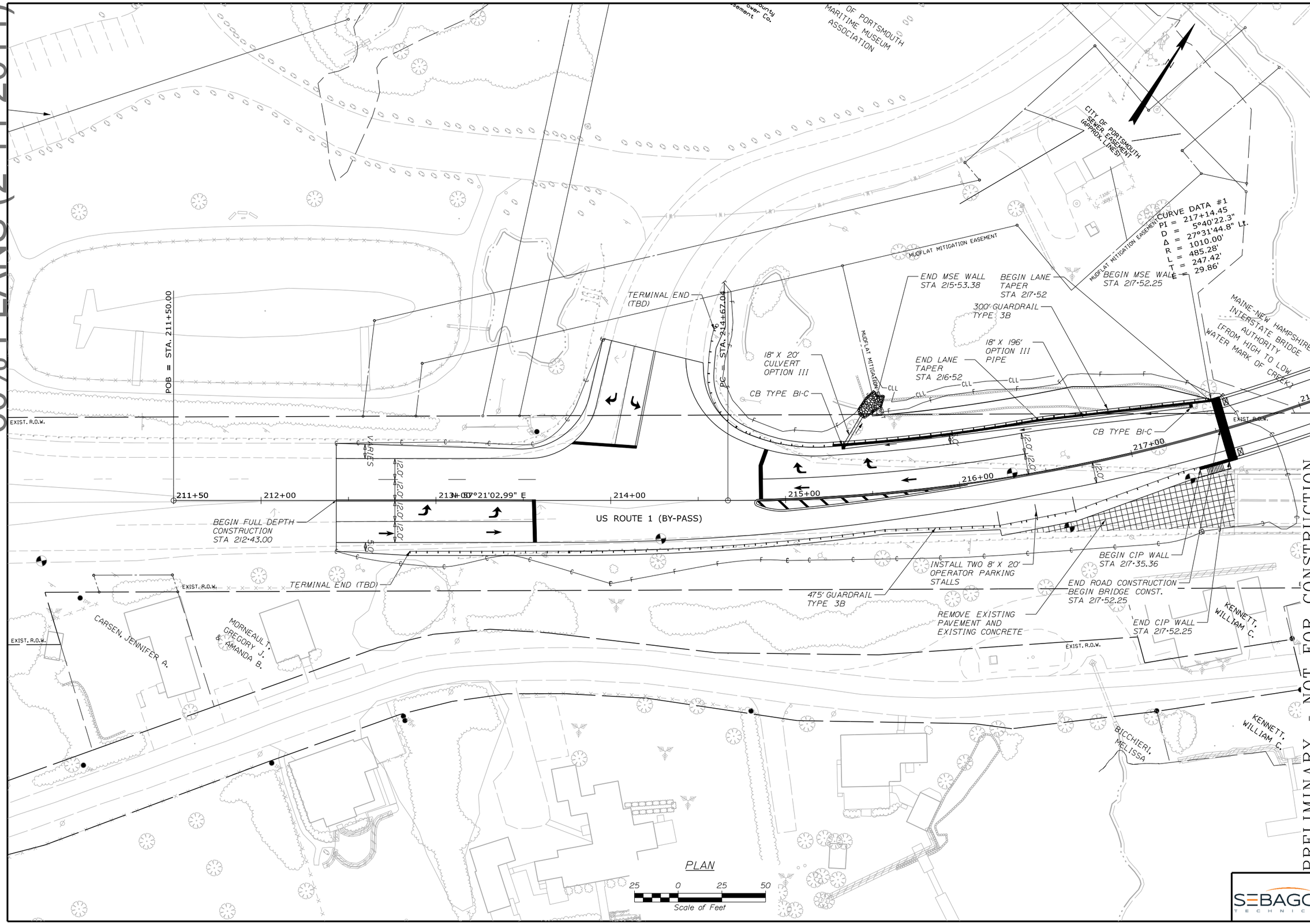

STATE OF MAINE
DEPARTMENT OF TRANSPORTATION

16710.00

PIN 16710.00

ROADWAY PLANS

ME 3641 NH 251/108

		BY	DATE
PROJ. MANAGER	W.J. ROHLDER		
DESIGN-DETAILED	B. LYON	B. LYON	01-31-14
CHECKED-REVIEWED	S. SAWYER	S. SAWYER	01-31-14
REVISIONS 1			
REVISIONS 2			
REVISIONS 3			
REVISIONS 4			
REVISIONS 5			
REVISIONS 6			
REVISIONS 7			
REVISIONS 8			

SIGNATURE

P.E. NUMBER

DATE

PRELIMINARY - NOT FOR CONSTRUCTION

SARAH MILDRED LONG BRIDGE
PISCATAQUA RIVER
KITTERY, ME PORTSMOUTH, NH

GENERAL PLAN I

SEBAGO TECHNICS

SHEET NUMBER

R10

OF R93

60% PLANS (2-14-2014)
Date:2/14/2014
Filename: ...\Sheet Files\011_HDPlan2.dgn Division: HIGHWAY Username: blyon

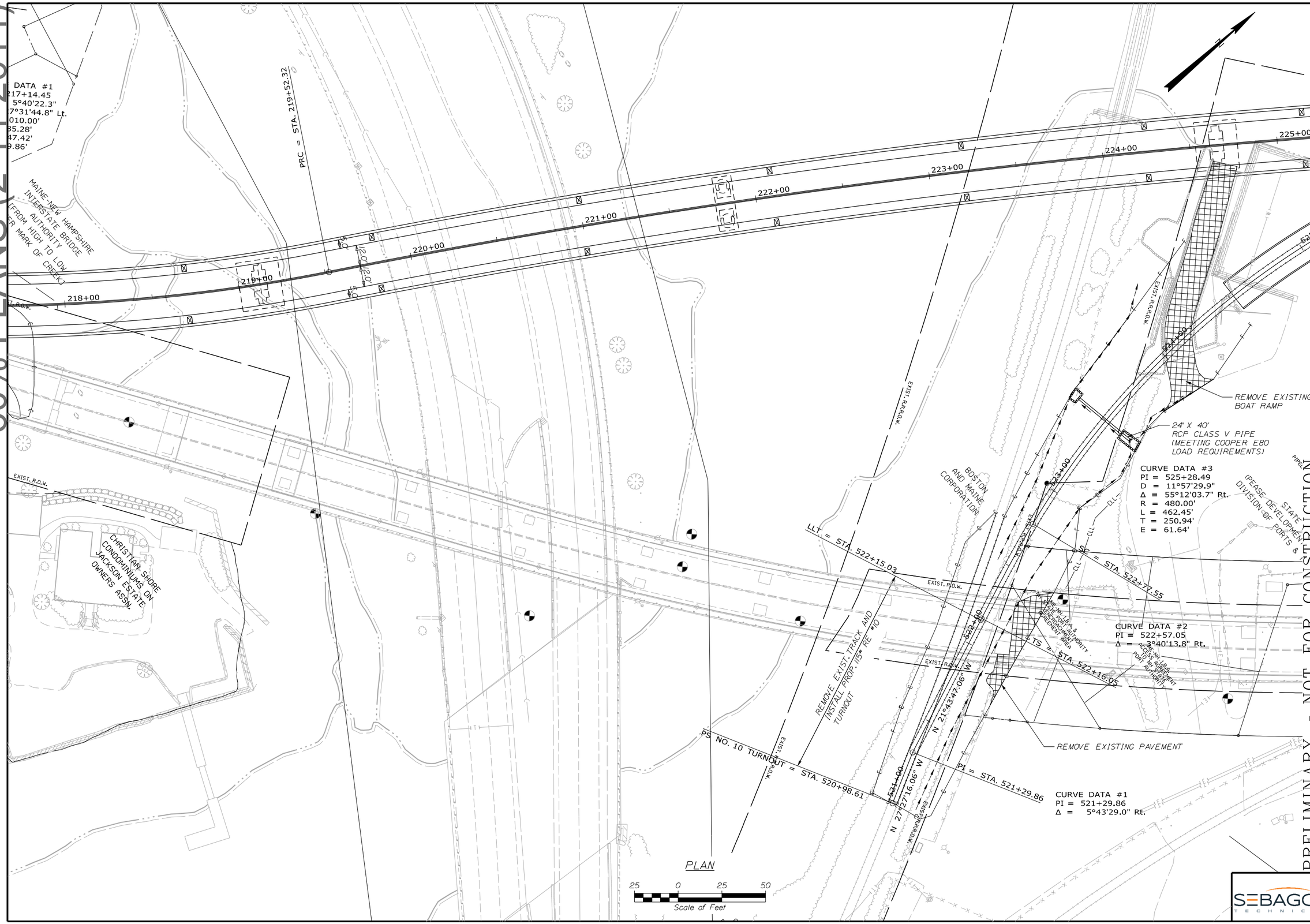

STATE OF MAINE
DEPARTMENT OF TRANSPORTATION

16710.00

PIN 16710.00

ME 3641 NH 251/108

ROADWAY PLANS

PROJ. MANAGER	W.J. ROHLEDER	BY	DATE
DESIGN-DETAILED	B. LYON	B. LYON	02-14-14
CHECKED-REVIEWED	S. SAWYER	S. SAWYER	02-14-14
REVISIONS 1			
REVISIONS 2			
REVISIONS 3			
REVISIONS 4			
REVISIONS 5			
REVISIONS 6			
REVISIONS 7			
REVISIONS 8			

SIGNATURE

P.E. NUMBER

DATE

PRELIMINARY - NOT FOR CONSTRUCTION

SARAH MILDRED LONG BRIDGE
PISCATAQUA RIVER
KITTERY, ME PORTSMOUTH, NH

GENERAL PLAN II

SEBAGO TECHNICS

SHEET NUMBER

R11

OF R93

Filename: ...\Sheet Files\012_HDPlan3.dgn Division: HIGHWAY Username: blyon Date:2/14/2014
60% PLANS (2-14-2014)

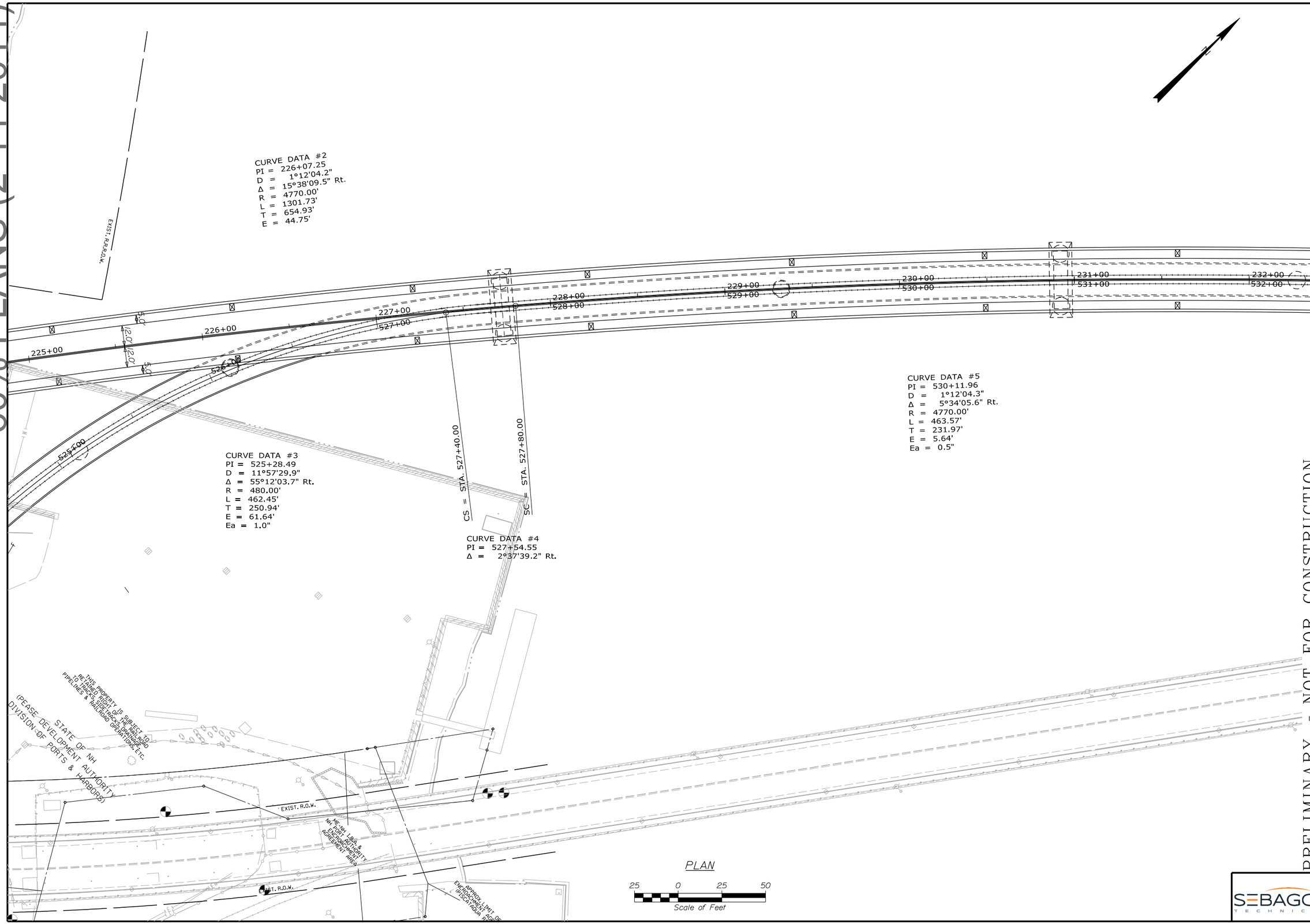

STATE OF MAINE
DEPARTMENT OF TRANSPORTATION

16710.00

PIN 16710.00

ME 3641 NH 251/108 ROADWAY PLANS

		BY	DATE
PROJ. MANAGER	W.J. ROHLDER		
DESIGN-DETAILED	B. LYON	B. LYON	02-14-14
CHECKED-REVIEWED	S. SAWYER	S. SAWYER	02-14-14
REVISIONS 1			
REVISIONS 2			
REVISIONS 3			
REVISIONS 4			
REVISIONS 5			
REVISIONS 6			
REVISIONS 7			
REVISIONS 8			

SIGNATURE

P.E. NUMBER

DATE

PRELIMINARY - NOT FOR CONSTRUCTION

SARAH MILDRED LONG BRIDGE
PISCATAQUA RIVER
KITTERY, ME PORTSMOUTH, NH

GENERAL PLAN III

SEBAGO TECHNICS

SHEET NUMBER

R12

OF R93

60% PLANS (1-31-2014)
Date:1/31/2014
Username: blyon
Division: HIGHWAY
Filename: ...\Sheet Files\013_HDPlan4.dgn

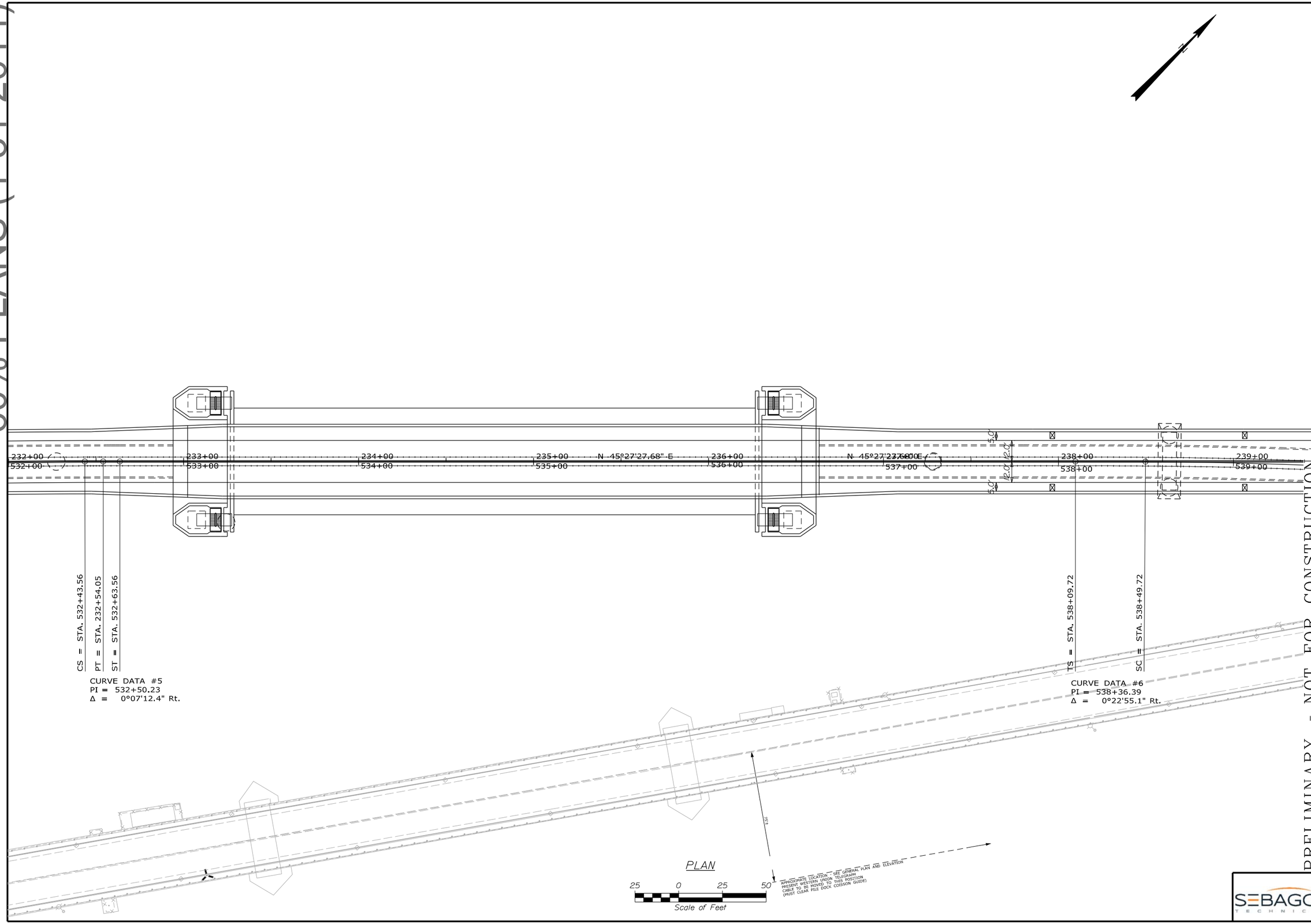

PRELIMINARY - NOT FOR CONSTRUCTION

STATE OF MAINE
DEPARTMENT OF TRANSPORTATION

16710.00

PIN
16710.00

ME 3641 NH 251/108 ROADWAY PLANS

		BY	DATE
PROJ. MANAGER	W.J. ROHLEDER		
DESIGN-DETAILED	B. LYON	B. LYON	01-31-14
CHECKED-REVIEWED	S. SAWYER	S. SAWYER	01-31-14
REVISIONS 1			
REVISIONS 2			
REVISIONS 3			
REVISIONS 4			
REVISIONS 5			
REVISIONS 6			
REVISIONS 7			
REVISIONS 8			

SIGNATURE

P.E. NUMBER

DATE

SARAH MILDRED LONG BRIDGE
PISCATAQUA RIVER
KITTERY, ME PORTSMOUTH, NH

GENERAL PLAN IV

SEBAGO TECHNICS

SHEET NUMBER

R13

OF R93

60% PLANS (2-14-2014)

Date:2/14/2014 Username: blyon Division: HIGHWAY Filename: ...\Sheet Files\014_HDPlan5.dgn

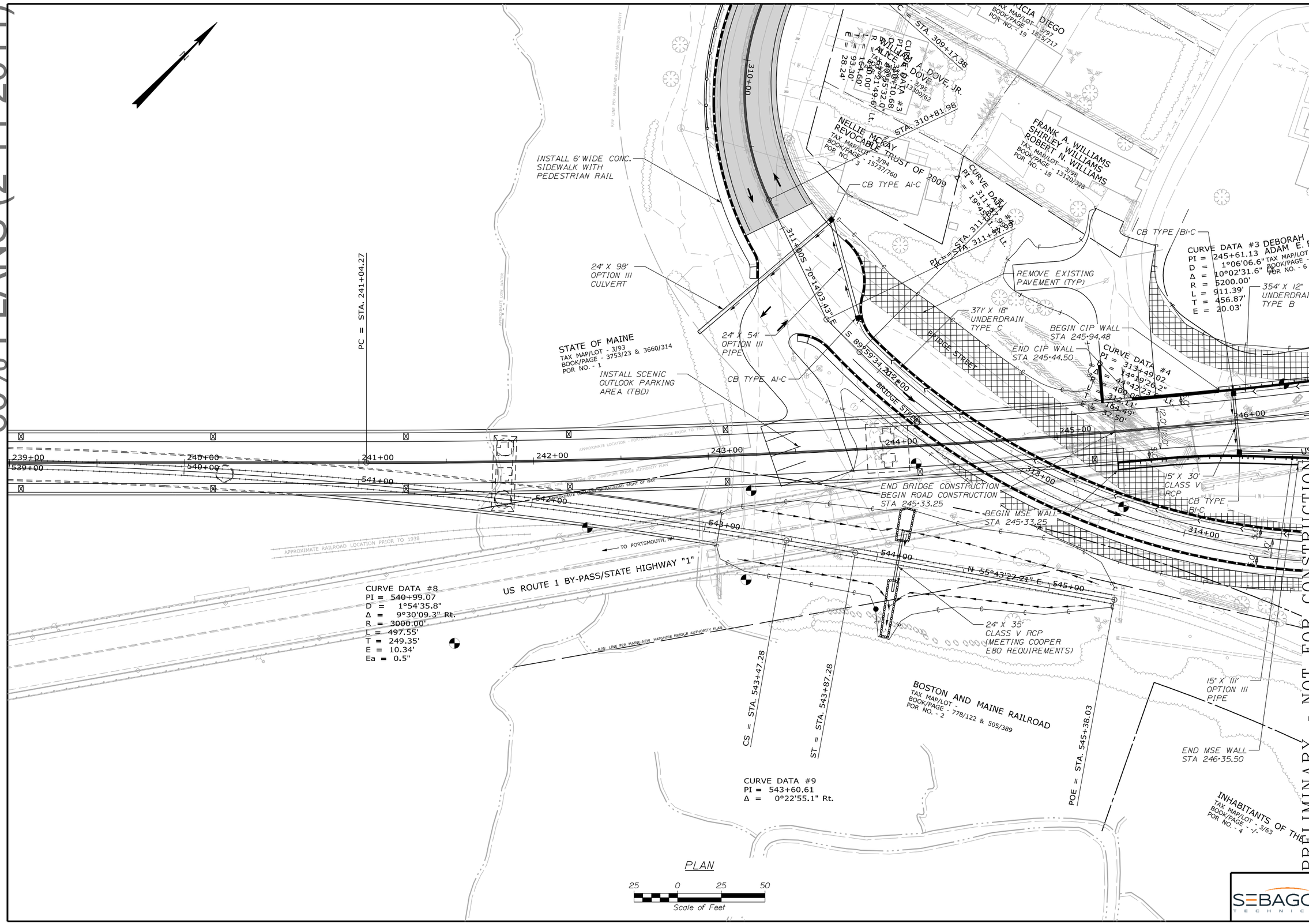

STATE OF MAINE
DEPARTMENT OF TRANSPORTATION

16710.00

PIN 16710.00

ME 3641 NH 251/108

ROADWAY PLANS

PROJ. MANAGER	W.J. ROHLDER		
DESIGN-DETAILED	B. LYON	B. LYON	02-14-14
CHECKED-REVIEWED	S. SAWYER	S. SAWYER	02-14-14
REVISIONS 1			
REVISIONS 2			
REVISIONS 3			
REVISIONS 4			
REVISIONS 5			
REVISIONS 6			
REVISIONS 7			
REVISIONS 8			

SIGNATURE

P.E. NUMBER

DATE

SARAH MILDRED LONG BRIDGE
PISCATAQUA RIVER
KITTERY, ME PORTSMOUTH, NH

GENERAL PLAN V

SEBAGO TECHNICS

SHEET NUMBER

R14

OF R93

60% PLANS (1-31-2014)

Filename: ...\Sheet Files\015_HDPlan6.dgn Division: HIGHWAY Username: blyon Date:1/31/2014

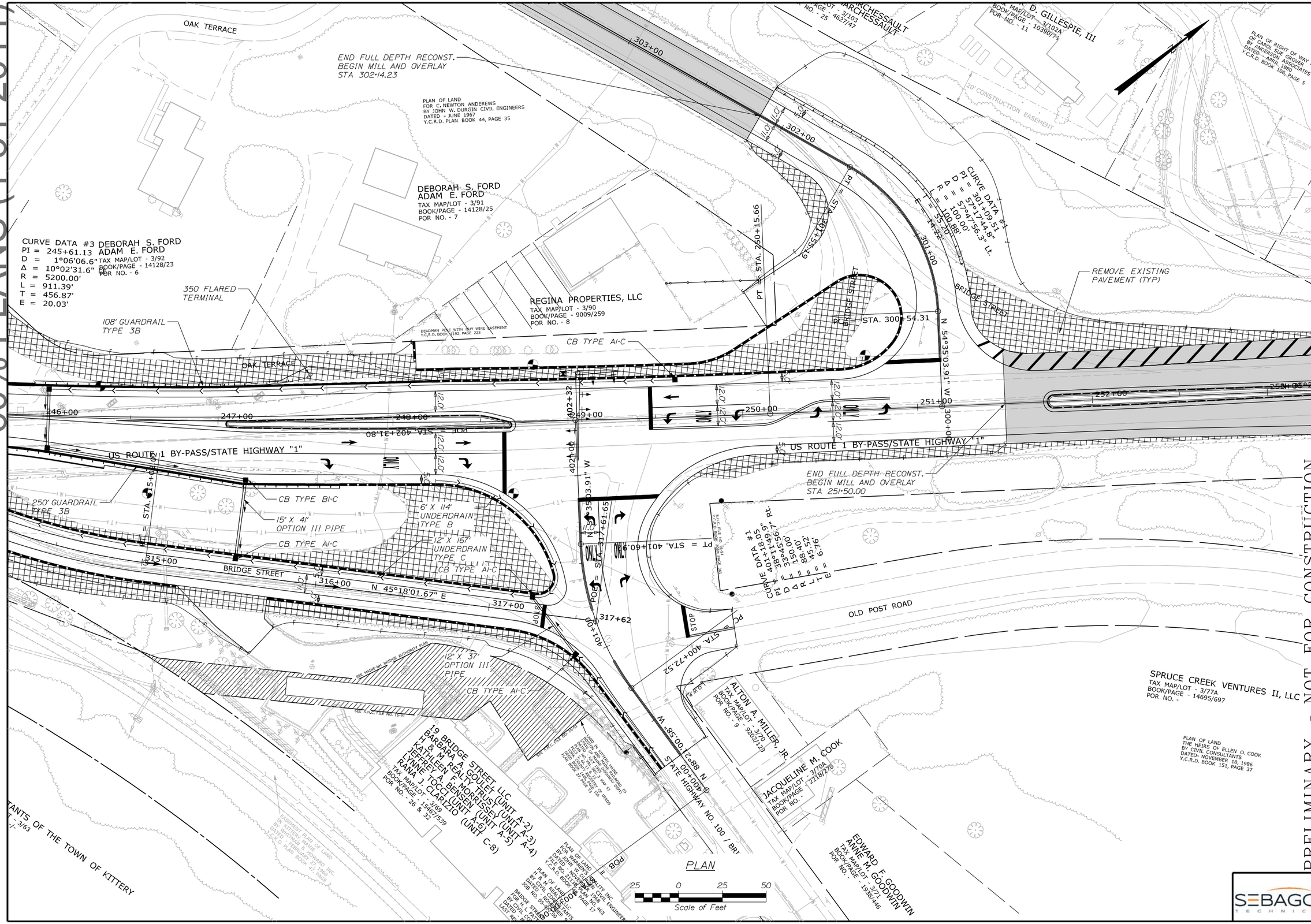

PRELIMINARY - NOT FOR CONSTRUCTION

STATE OF MAINE
DEPARTMENT OF TRANSPORTATION

16710.00

PIN 16710.00

ME 3641 NH 251/108

ROADWAY PLANS

PROJ. MANAGER	W.J. ROALDER	BY	DATE
DESIGN-DETAILED	B. LYON	B. LYON	01-31-14
CHECKED-REVIEWED	S. SAWYER	S. SAWYER	01-31-14
REVISIONS 1			
REVISIONS 2			
REVISIONS 3			
REVISIONS 4			
REVISIONS 5			
REVISIONS 6			
REVISIONS 7			
REVISIONS 8			

SIGNATURE

P.E. NUMBER

DATE

SARAH MILDRED LONG BRIDGE
PISCATAQUA RIVER
KITTERY, ME PORTSMOUTH, NH

GENERAL PLAN VI

SEBAGO TECHNICS

SHEET NUMBER

R15

OF R93

Filename: ...\Sheet Files\016_HDPlan8.dgn Division: HIGHWAY Username: blyon Date:1/31/2014

60% PLANS (1-31-2014)

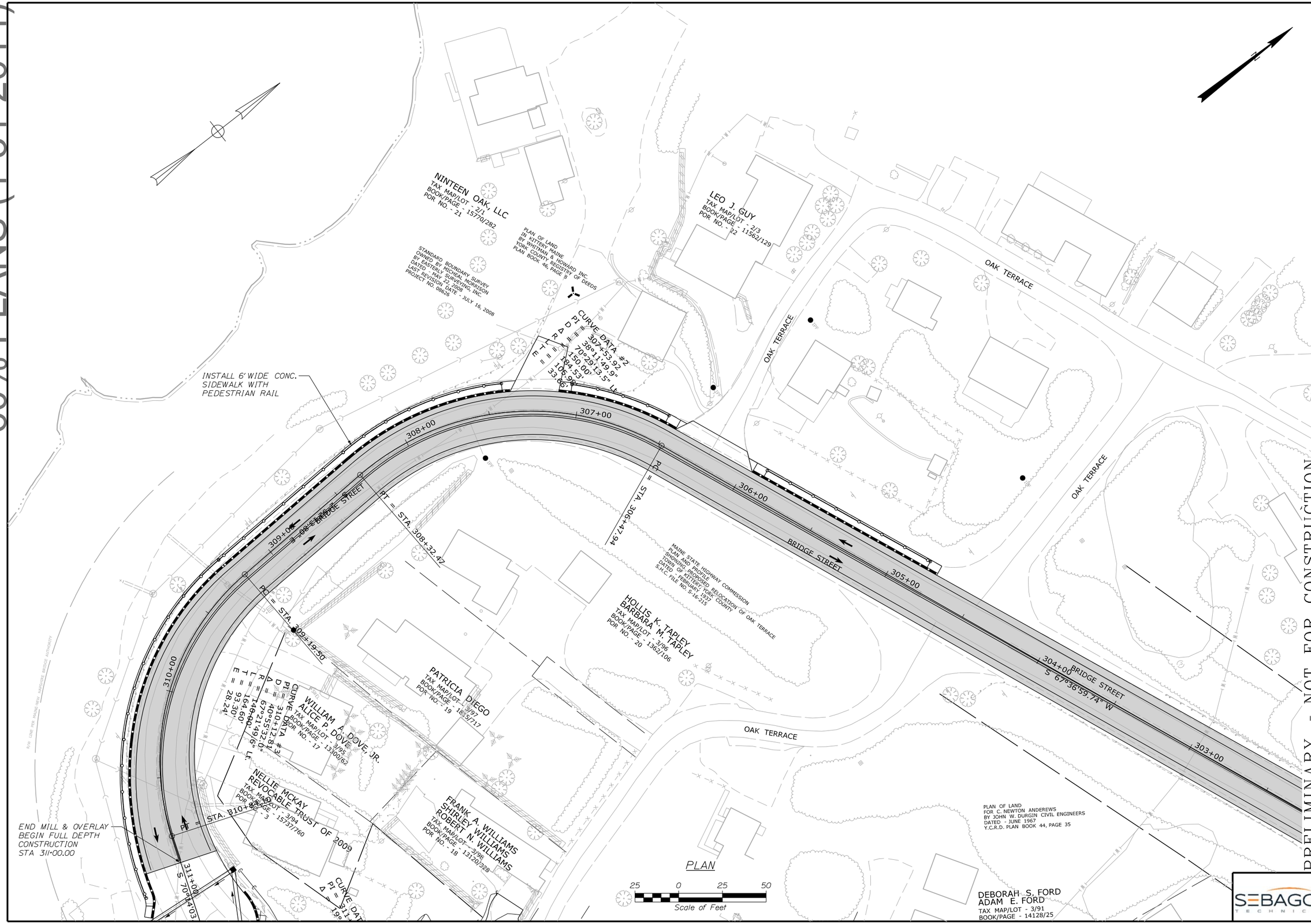

STATE OF MAINE
DEPARTMENT OF TRANSPORTATION

16710.00

PIN 16710.00

ME 3641 NH 251/108 ROADWAY PLANS

PROJ. MANAGER	W.J. ROHLDER	BY	DATE
DESIGN-DETAILED	B. LYON	B. LYON	01-31-14
CHECKED-REVIEWED	S. SAWYER	S. SAWYER	01-31-14
REVISIONS 1			
REVISIONS 2			
REVISIONS 3			
REVISIONS 4			
REVISIONS 5			
REVISIONS 6			
REVISIONS 7			
REVISIONS 8			

SIGNATURE

P.E. NUMBER

DATE

PRELIMINARY - NOT FOR CONSTRUCTION

SARAH MILDRED LONG BRIDGE
PISCATAQUA RIVER
KITTERY, ME PORTSMOUTH, NH

GENERAL PLAN VII

SEBAGO TECHNICS

SHEET NUMBER

R16

OF R93

Filename: ...\Sheet Files\017_HDPlan7.dgn Division: HIGHWAY Username: blyon Date:1/31/2014

60% PLANS (1-31-2014)

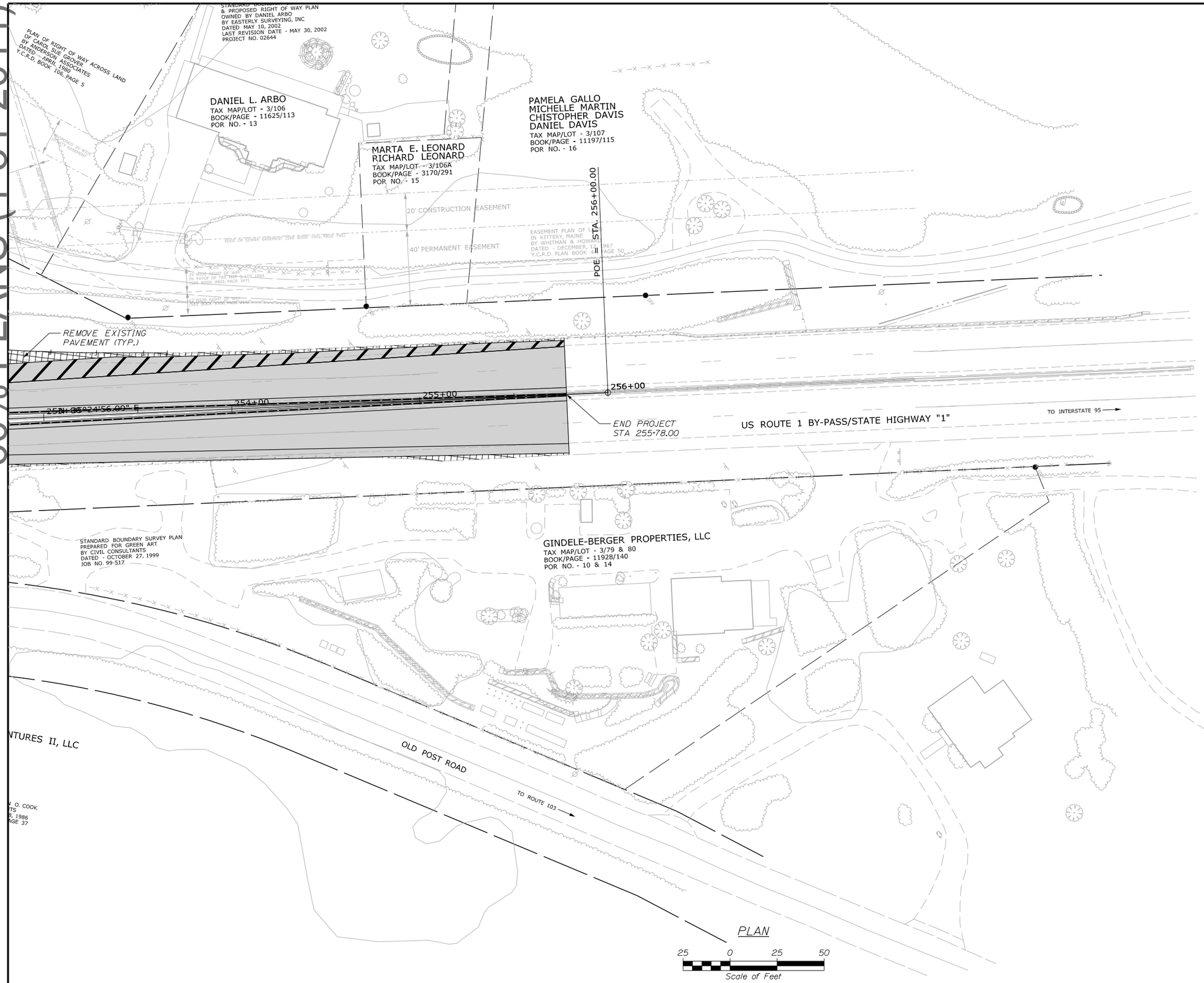

STATE OF MAINE
DEPARTMENT OF TRANSPORTATION

16710.00

PIN 16710.00

ME 3641 NH 251/108

ROADWAY PLANS

PROJ. MANAGER	W.J. ROHLDER	BY	DATE
DESIGN-DETAILED	B. LYON	B. LYON	01-31-14
CHECKED-REVIEWED	S. SAWYER	S. SAWYER	01-31-14
REVISIONS 1			
REVISIONS 2			
REVISIONS 3			
REVISIONS 4			
REVISIONS 5			
REVISIONS 6			
REVISIONS 7			
REVISIONS 8			

SIGNATURE

P.E. NUMBER

DATE

PRELIMINARY - NOT FOR CONSTRUCTION

SARAH MILDRED LONG BRIDGE
PISCATAQUA RIVER
KITTERY, ME PORTSMOUTH, NH

GENERAL PLAN VIII

SEBAGO TECHNICS

SHEET NUMBER

R17

OF R93

Filename: ...\026_ROADWAY PROFILES.dgn Division: HIGHWAY Username: blyon Date:1/31/2014

60% PLANS (1-31-2014)

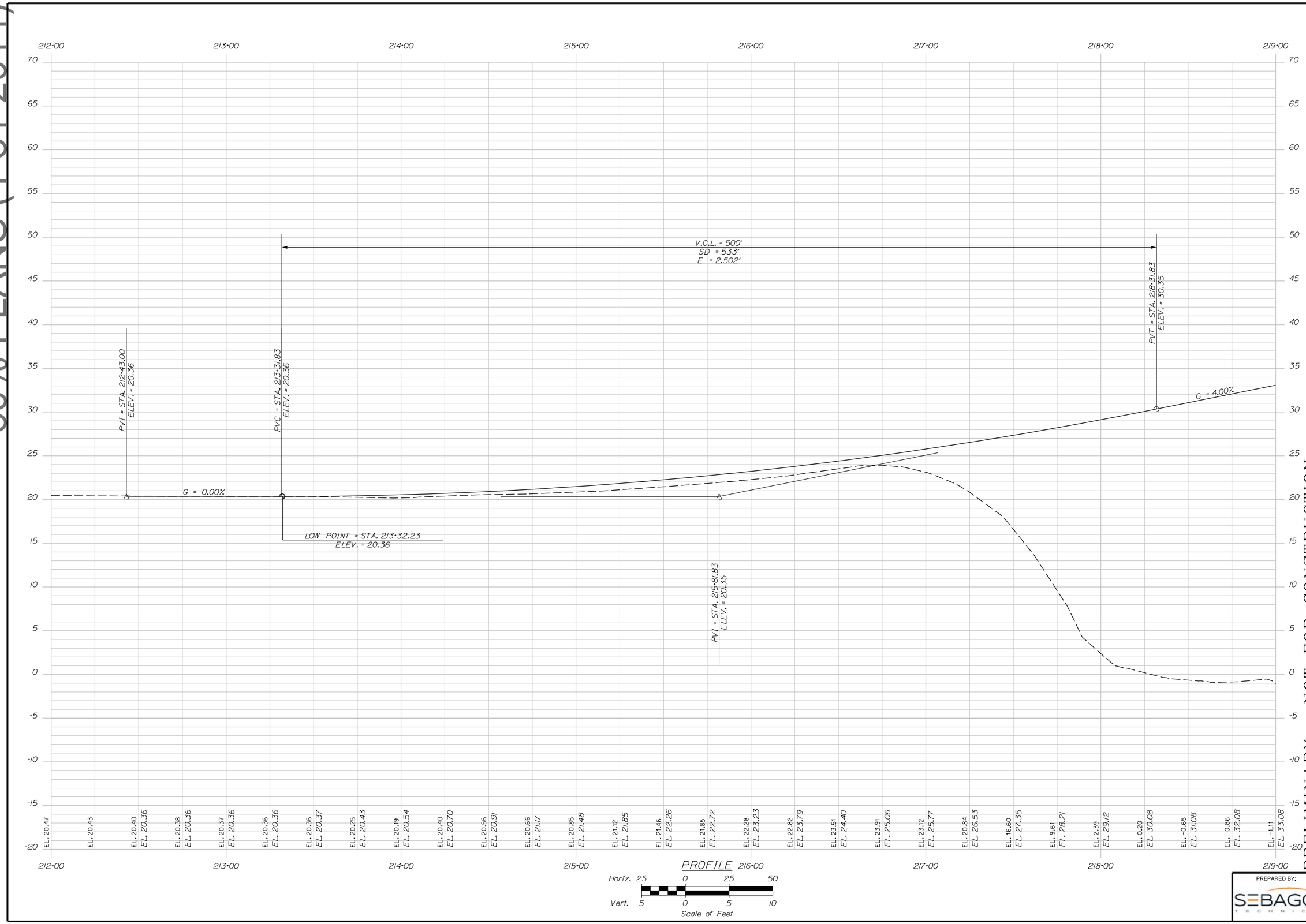

PRELIMINARY - NOT FOR CONSTRUCTION

SARAH MILDRED LONG BRIDGE
PISCATAQUA RIVER
PORTSMOUTH, NH
KITTERY, ME

ROADWAY PROFILE I

PREPARED BY: SEBAGO TECHNICS

		BY	DATE
PROJ. MANAGER	W.J. ROHLEDER		
DESIGN-DETAILED	B. LYON	B. LYON	01-31-14
CHECKED-REVIEWED	S. SAWYER	S. SAWYER	01-31-14
REVISIONS 1			
REVISIONS 2			
REVISIONS 3			
REVISIONS 4			
REVISIONS 5			
REVISIONS 6			
REVISIONS 7			
REVISIONS 8			

SIGNATURE

P.E. NUMBER

DATE

STATE OF MAINE
DEPARTMENT OF TRANSPORTATION

16710.00

PIN 16710.00

ME 3641 NH 251/108 ROADWAY PLANS

SHEET NUMBER

R23

OF R93

Filename: ...\026_ROADWAY PROFILES.dgn Division: HIGHWAY Username: blyon Date:1/31/2014

60% PLANS (1-31-2014)

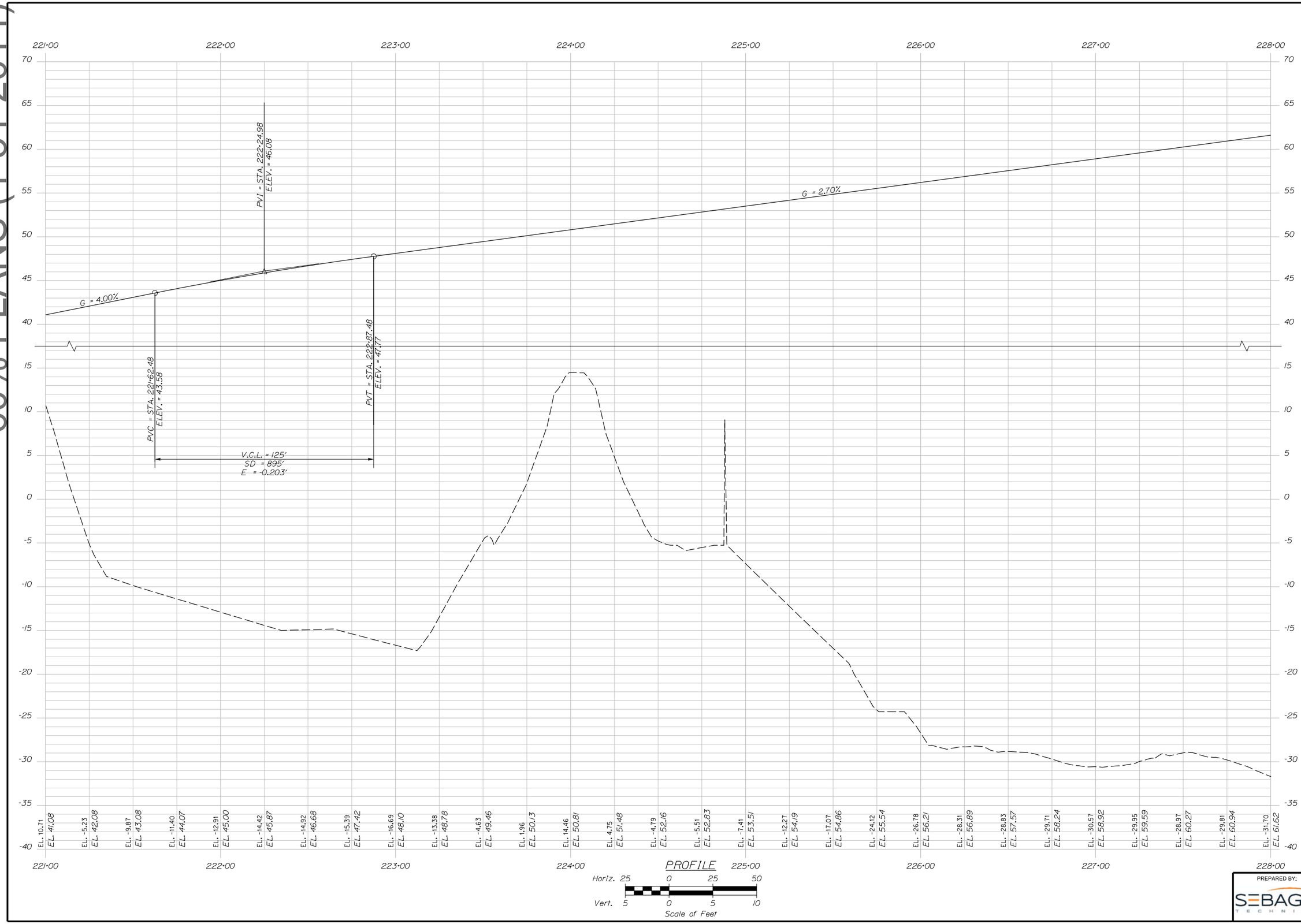

PREPARED BY:

SEBAGO TECHNICS

PRELIMINARY - NOT FOR CONSTRUCTION

SARAH MILDRED LONG BRIDGE
PISCATAQUA RIVER
KITTERY, ME PORTSMOUTH, NH

ROADWAY PROFILE II

		BY	DATE
PROJ. MANAGER	W.J. ROHLDER		
DESIGN-DETAILED	B. LYON	B. LYON	01-31-14
CHECKED-REVIEWED	S. SAWYER	S. SAWYER	01-31-14
REVISIONS 1			
REVISIONS 2			
REVISIONS 3			
REVISIONS 4			
REVISIONS 5			
REVISIONS 6			
REVISIONS 7			
REVISIONS 8			

SIGNATURE

P.E. NUMBER

DATE

STATE OF MAINE
DEPARTMENT OF TRANSPORTATION

16710.00

PIN 16710.00

ME 3641 NH 251/108 ROADWAY PLANS

SHEET NUMBER

R24

OF R93

60% PLANS (1-31-2014)
Date:1/31/2014
Filename: ...\026_ROADWAY PROFILES.dgn Division: HIGHWAY Username: blyon

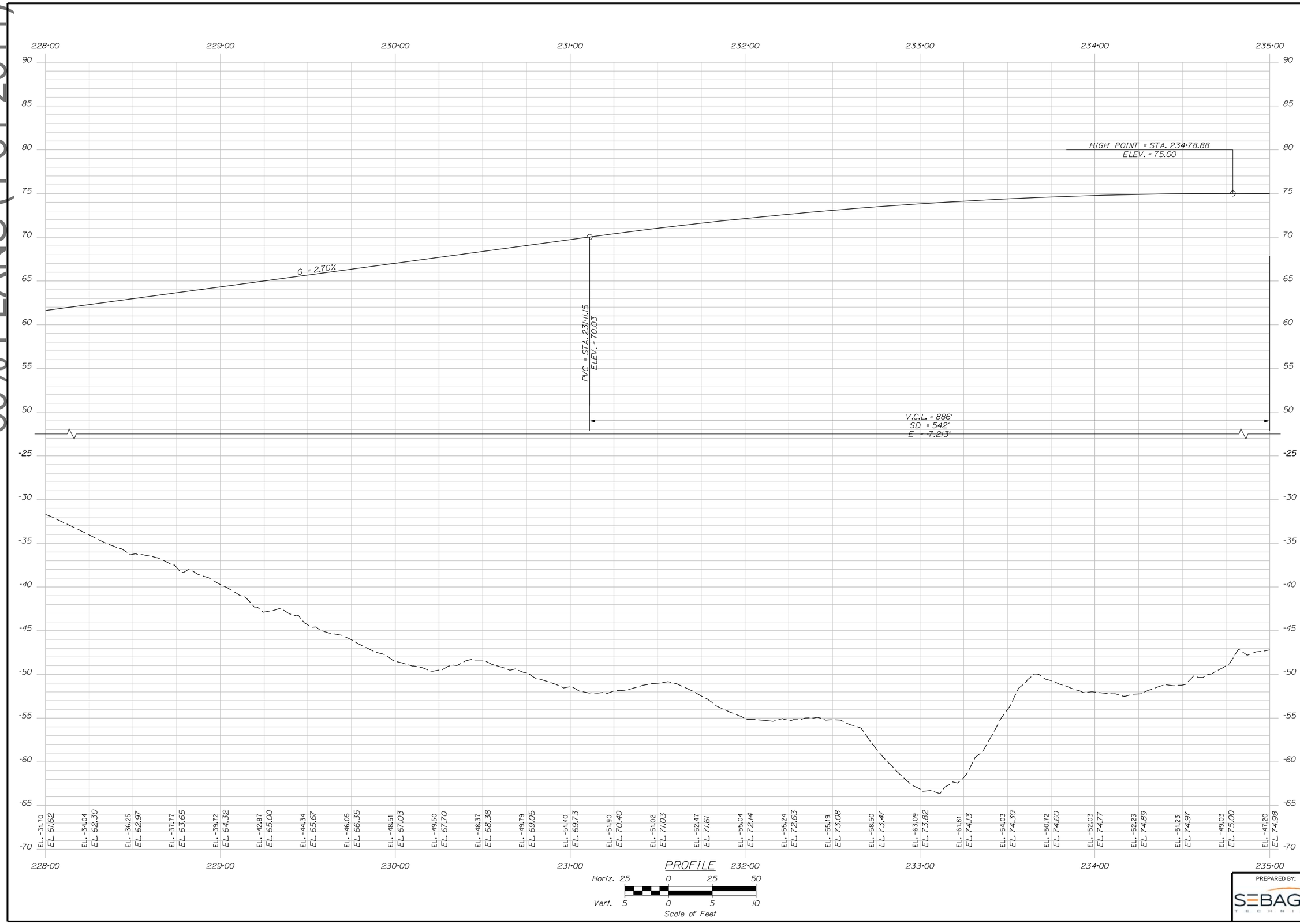

STATE OF MAINE
DEPARTMENT OF TRANSPORTATION

16710.00

PIN 16710.00

ME 3641 NH 251/108

ROADWAY PLANS

		BY	DATE
PROJ. MANAGER	W.J. ROHLEDER		
DESIGN-DETAILED	B. LYON	B. LYON	01-31-14
CHECKED-REVIEWED	S. SAWYER	S. SAWYER	01-31-14
REVISIONS 1			
REVISIONS 2			
REVISIONS 3			
REVISIONS 4			
REVISIONS 5			
REVISIONS 6			
REVISIONS 7			
REVISIONS 8			

SIGNATURE

P.E. NUMBER

DATE

PRELIMINARY - NOT FOR CONSTRUCTION

SARAH MILDRED LONG BRIDGE
PISCATAQUA RIVER
PORTSMOUTH, NH
KITTERY, ME

ROADWAY PROFILE III

PREPARED BY:
SEBAGO TECHNICS

SHEET NUMBER
R25
OF R93

Filename: ...\026_ROADWAY PROFILES.dgn Division: HIGHWAY Username: blyon Date:1/31/2014

60% PLANS (1-31-2014)

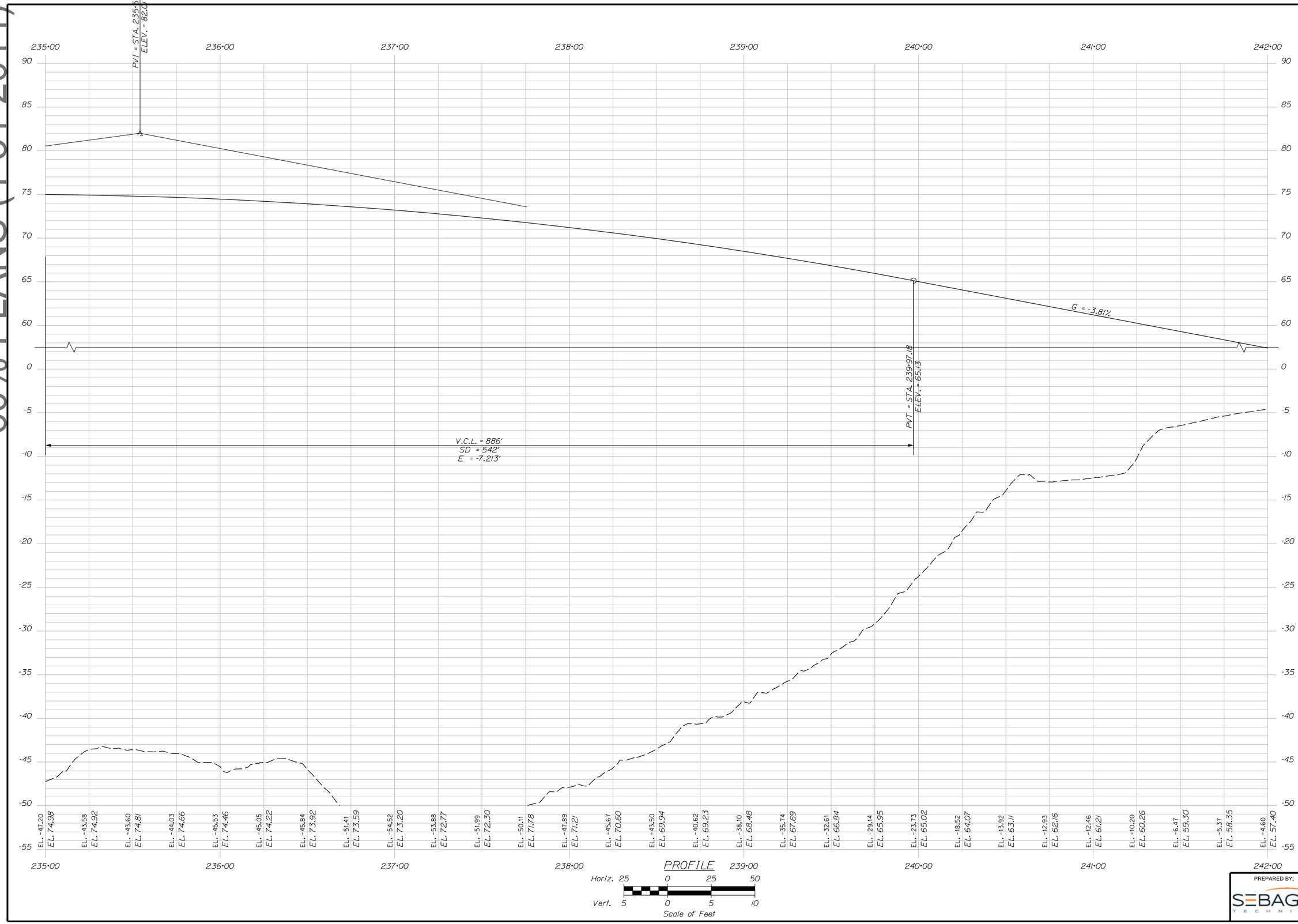

PREPARED BY:

SEBAGO TECHNICS

PRELIMINARY - NOT FOR CONSTRUCTION

SARAH MILDRED LONG BRIDGE
PISCATAQUA RIVER
PORTSMOUTH, NH
KITTERY, ME

ROADWAY PROFILE IV

PROJ. MANAGER	W.J. ROHLDER	BY	DATE
DESIGN-DETAILED	B. LYON	B. LYON	01-31-14
CHECKED-REVIEWED	S. SAWYER	S. SAWYER	01-31-14
REVISIONS 1			
REVISIONS 2			
REVISIONS 3			
REVISIONS 4			
REVISIONS 5			
REVISIONS 6			
REVISIONS 7			
REVISIONS 8			

SIGNATURE

P.E. NUMBER

DATE

STATE OF MAINE
DEPARTMENT OF TRANSPORTATION

16710.00

PIN 16710.00

ME 3641 NH 251/108 ROADWAY PLANS

SHEET NUMBER

R26

OF R93

60% PLANS (1-31-2014)
Date:1/31/2014
Username: blyon
Division: HIGHWAY
Filename: ...\026_ROADWAY PROFILES.dgn

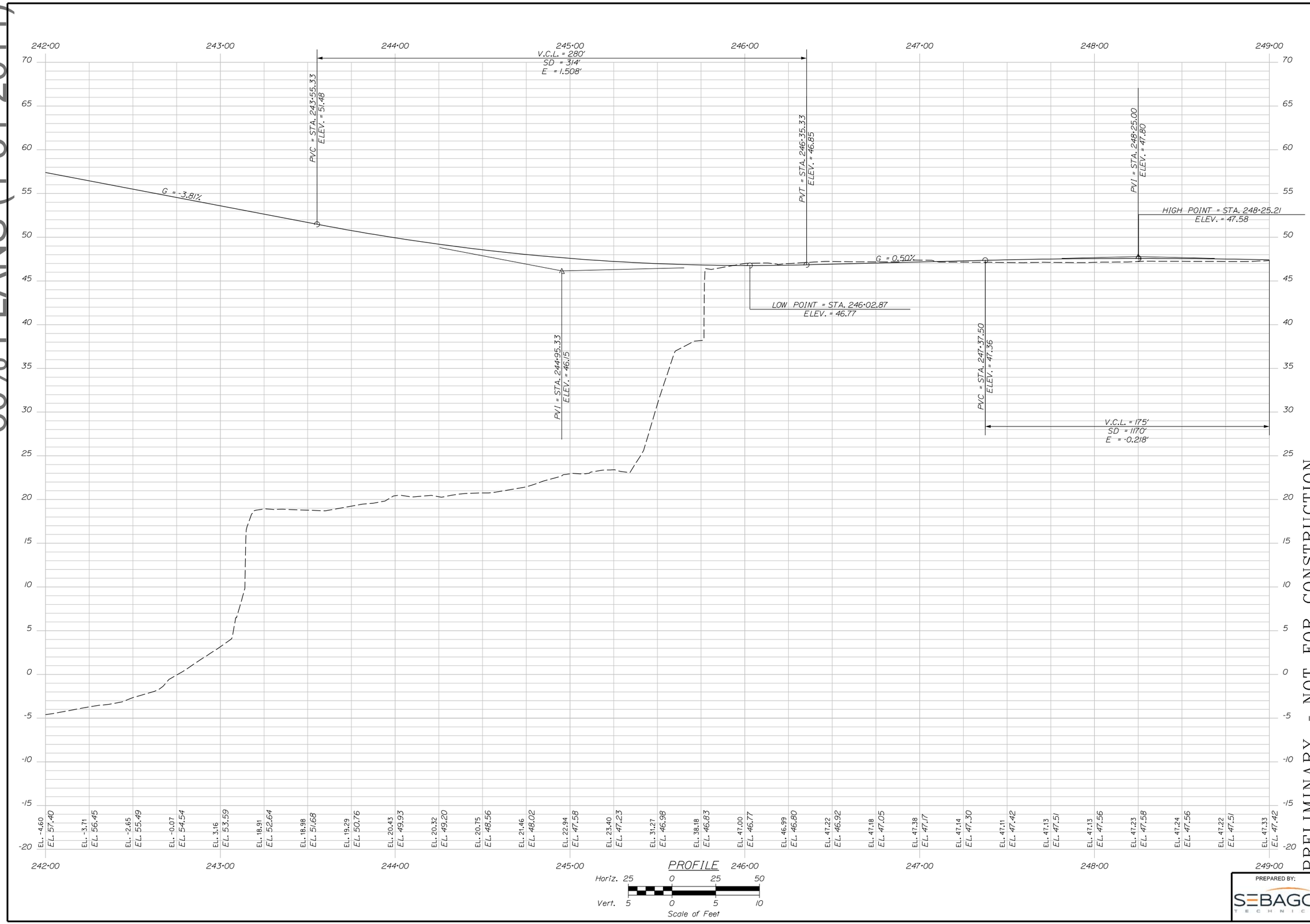

PRELIMINARY - NOT FOR CONSTRUCTION

PREPARED BY: SEBAGO TECHNICS

STATE OF MAINE
DEPARTMENT OF TRANSPORTATION

16710.00

PIN 16710.00

ME 3641 NH 251/108

ROADWAY PLANS

		BY	DATE
PROJ. MANAGER	W.J. ROHLEDER		
DESIGN-DETAILED	B. LYON	B. LYON	01-31-14
CHECKED-REVIEWED	S. SAWYER	S. SAWYER	01-31-14
REVISIONS 1			
REVISIONS 2			
REVISIONS 3			
REVISIONS 4			
REVISIONS 5			
REVISIONS 6			
REVISIONS 7			
REVISIONS 8			

SIGNATURE

P.E. NUMBER

DATE

SARAH MILDRED LONG BRIDGE
PISCATAQUA RIVER
PORTSMOUTH, NH
KITTERY, ME

ROADWAY PROFILE V

SHEET NUMBER

R27

OF R93

60% PLANS (1-31-2014)
Date:1/31/2014
Filename: ...\026_ROADWAY PROFILES.dgn Division: HIGHWAY Username: blyon

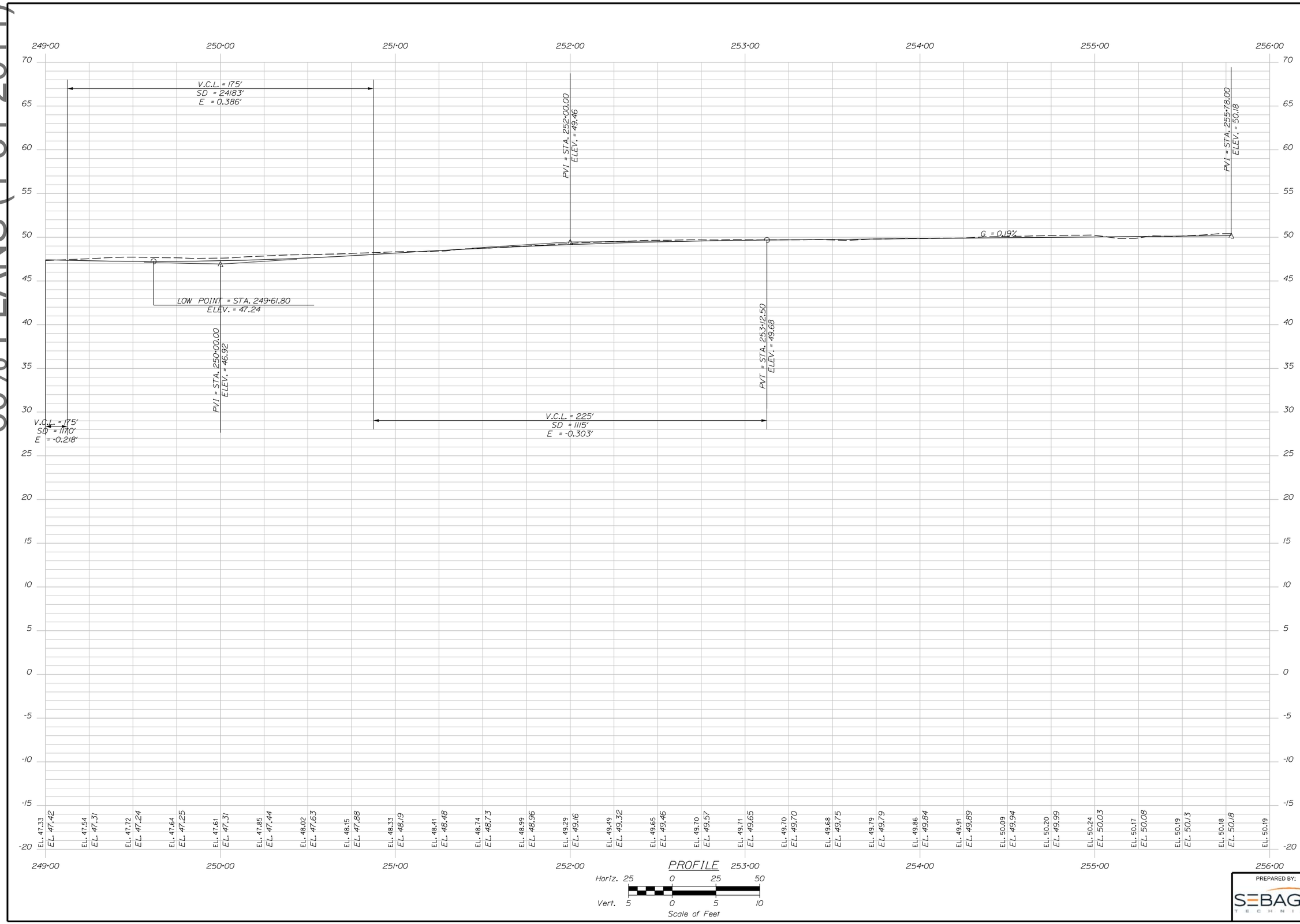

PREPARED BY:
SEBAGO TECHNICS

STATE OF MAINE
DEPARTMENT OF TRANSPORTATION

16710.00

PIN 16710.00

ME 3641 NH 251/108

ROADWAY PLANS

SIGNATURE

P.E. NUMBER

DATE

		BY	DATE
PROJ. MANAGER	W.J. ROHLEDER		
DESIGN-DETAILED	B. LYON	B. LYON	01-31-14
CHECKED-REVIEWED	S. SAWYER	S. SAWYER	01-31-14
REVISIONS 1			
REVISIONS 2			
REVISIONS 3			
REVISIONS 4			
REVISIONS 5			
REVISIONS 6			
REVISIONS 7			
REVISIONS 8			

PRELIMINARY - NOT FOR CONSTRUCTION

SARAH MILDRED LONG BRIDGE
PISCATAQUA RIVER
PORTSMOUTH, NH
KITTERY, ME

ROADWAY PROFILE VI

SHEET NUMBER

R28

OF R93

Filename: ...\033_RAILROAD PROFILES.dgn Division: HIGHWAY Username: blyon Date:2/14/2014

60% PLANS (2-14-2014)

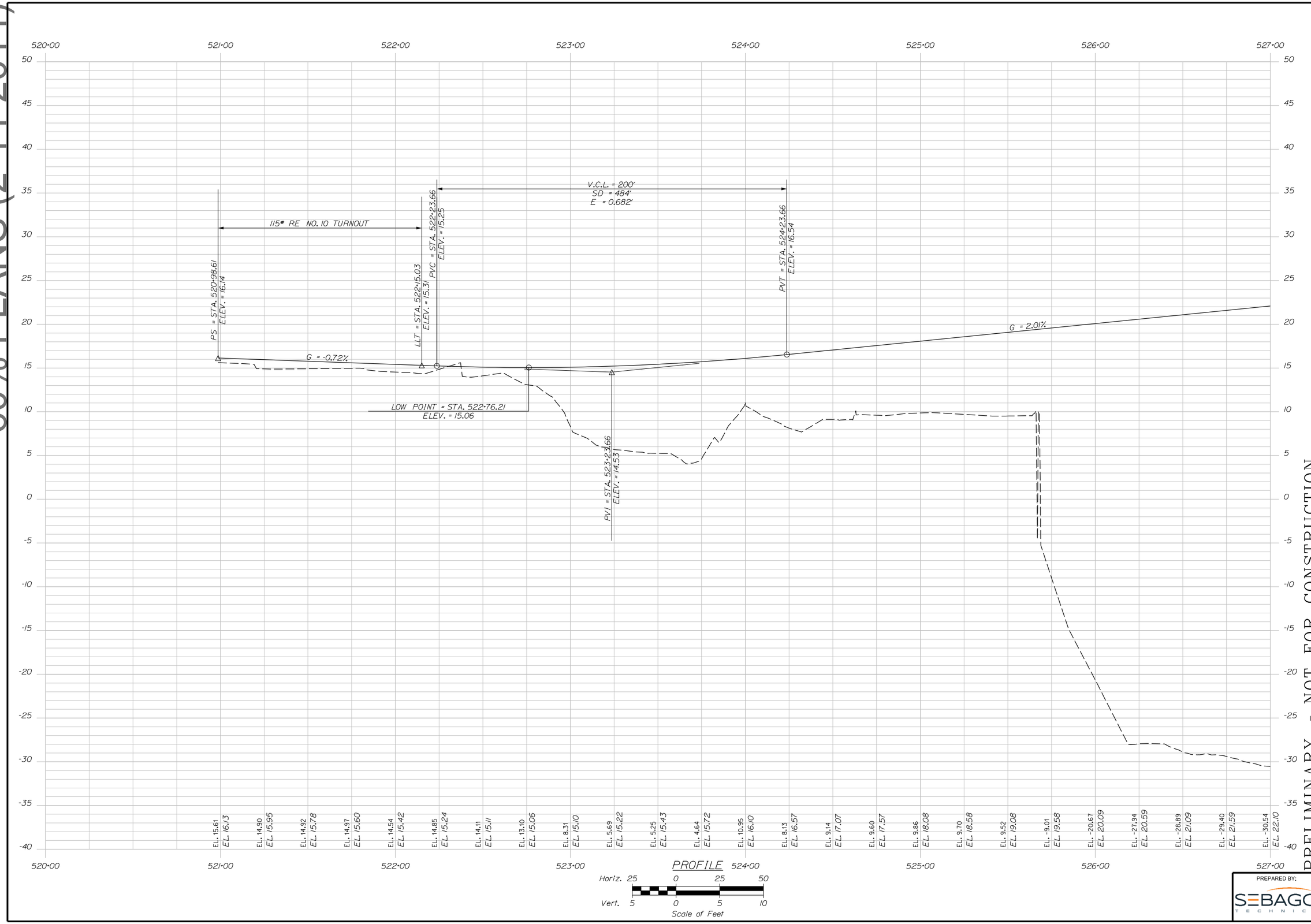

PRELIMINARY - NOT FOR CONSTRUCTION

STATE OF MAINE
DEPARTMENT OF TRANSPORTATION

16710.00

PIN 16710.00

ME 3641 NH 251/108

ROADWAY PLANS

PROJ. MANAGER	W.J. ROHLDER	BY	DATE
DESIGN-DETAILED	B. LYON	B. LYON	02-14-14
CHECKED-REVIEWED	S. SAWYER	S. SAWYER	02-14-14
REVISIONS 1			
REVISIONS 2			
REVISIONS 3			
REVISIONS 4			
REVISIONS 5			
REVISIONS 6			
REVISIONS 7			
REVISIONS 8			

SIGNATURE

P.E. NUMBER

DATE

SARAH MILDRED LONG BRIDGE
PISCATAQUA RIVER
PORTSMOUTH, NH
KITTERY, ME

RAILROAD PROFILE I

PREPARED BY: SEBAGO TECHNICS

SHEET NUMBER

R29

OF R93

Filename: ...\033_RAILROAD PROFILES.dgn Division: HIGHWAY Username: blyon Date:2/14/2014

60% PLANS (2-14-2014)

PREPARED BY: SEBAGO TECHNICS

PRELIMINARY - NOT FOR CONSTRUCTION

SARAH MILDRED LONG BRIDGE
PISCATAQUA RIVER
PORTSMOUTH, NH
KITTERY, ME

RAILROAD PROFILE II

		BY	DATE
PROJ. MANAGER	W.J. ROHLEDER		
DESIGN-DETAILED	B. LYON	B. LYON	02-14-14
CHECKED-REVIEWED	S. SAWYER	S. SAWYER	02-14-14
REVISIONS 1			
REVISIONS 2			
REVISIONS 3			
REVISIONS 4			
REVISIONS 5			
REVISIONS 6			
REVISIONS 7			
REVISIONS 8			

SIGNATURE

P.E. NUMBER

DATE

STATE OF MAINE
DEPARTMENT OF TRANSPORTATION

16710.00

PIN 16710.00

ME 3641 NH 251/108 ROADWAY PLANS

SHEET NUMBER

R30

OF R93

60% PLANS (2-14-2014)
Date:2/14/2014
Filename: ...\033_RAILROAD PROFILES.dgn Division: HIGHWAY Username: blyon

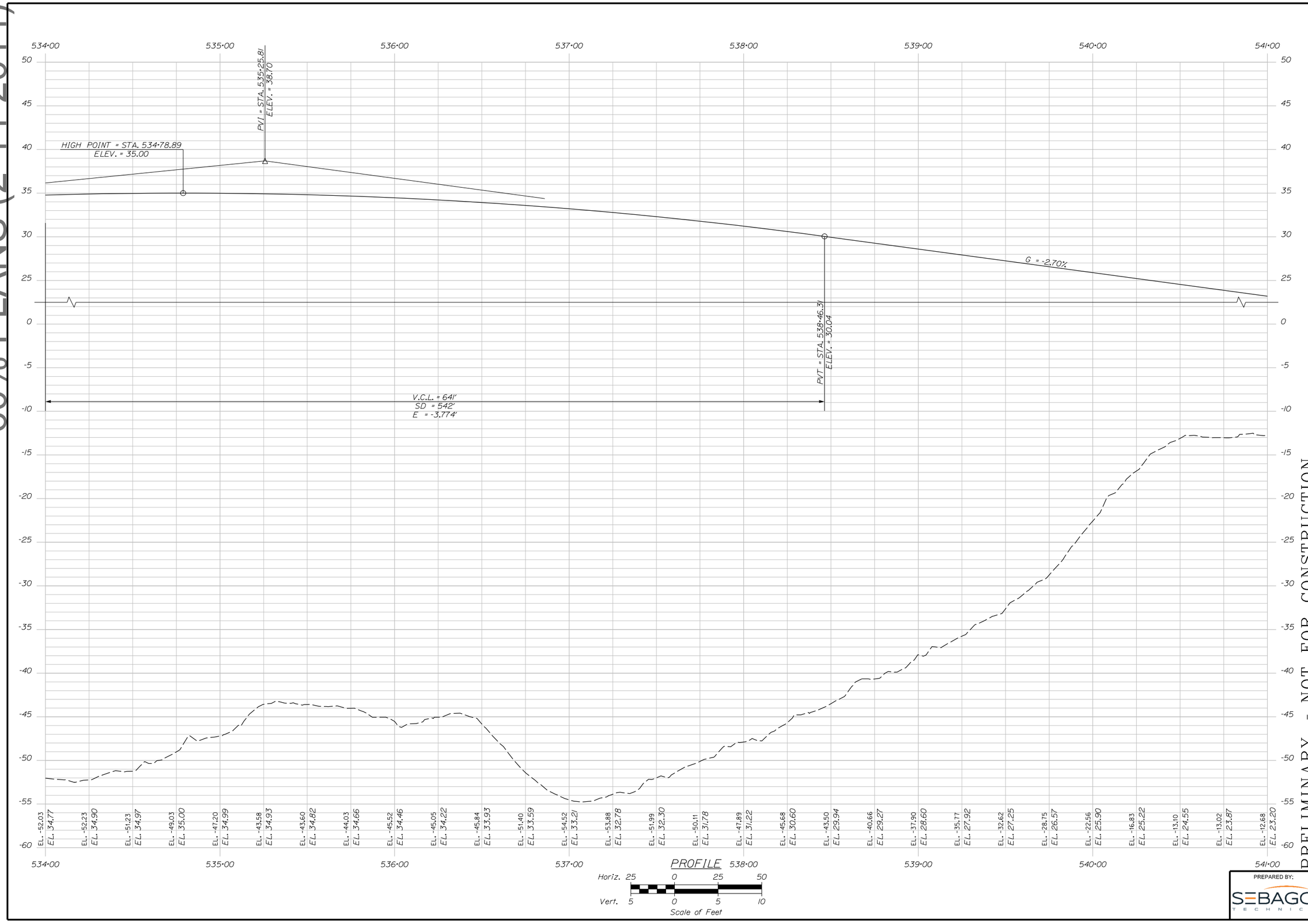

PRELIMINARY - NOT FOR CONSTRUCTION

SARAH MILDRED LONG BRIDGE
PISCATAQUA RIVER
PORTSMOUTH, NH
KITTERY, ME

RAILROAD PROFILE III

PREPARED BY: SEBAGO TECHNICS

		BY	DATE
PROJ. MANAGER	W.J. ROHLEDER		
DESIGN-DETAILED	B. LYON	B. LYON	02-14-14
CHECKED-REVIEWED	S. SAWYER	S. SAWYER	02-14-14
REVISIONS 1			
REVISIONS 2			
REVISIONS 3			
REVISIONS 4			
REVISIONS 5			
REVISIONS 6			
REVISIONS 7			
REVISIONS 8			

SIGNATURE

P.E. NUMBER

DATE

STATE OF MAINE
DEPARTMENT OF TRANSPORTATION

16710.00

PIN 16710.00

ME 3641 NH 251/108

ROADWAY PLANS

SHEET NUMBER

R31

OF R93

Filename: ...\033_RAILROAD PROFILES.dgn Division: HIGHWAY Username: blyon Date:2/14/2014

60% PLANS (2-14-2014)

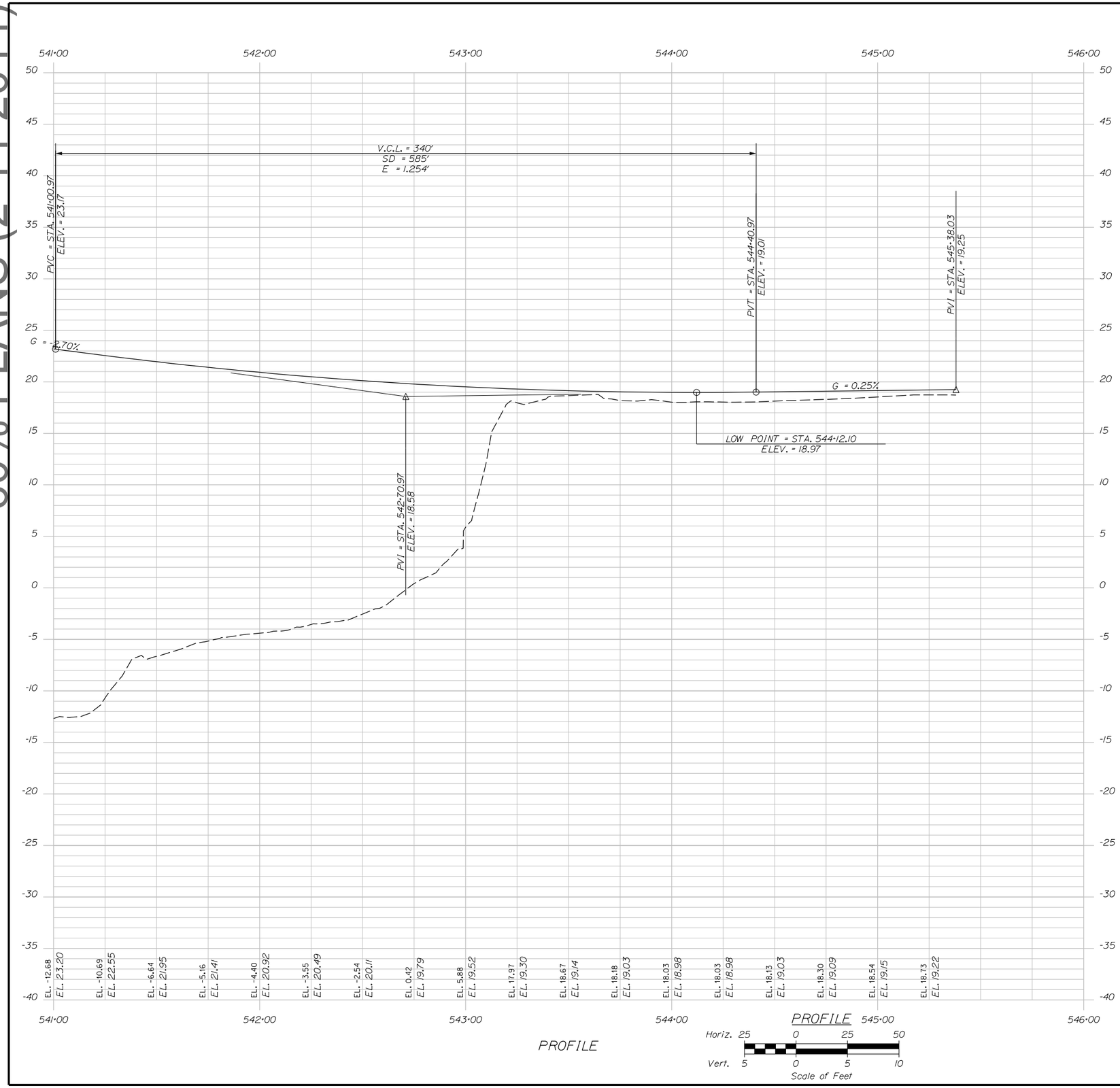

PRELIMINARY - NOT FOR CONSTRUCTION

STATE OF MAINE
DEPARTMENT OF TRANSPORTATION

16710.00

PIN 16710.00

ME 3641 NH 251/108

ROADWAY PLANS

PROJ. MANAGER	W.J. ROHLDER	BY	DATE
DESIGN-DETAILED	B. LYON	B. LYON	02-14-14
CHECKED-REVIEWED	S. SAWYER	S. SAWYER	02-14-14
REVISIONS 1			
REVISIONS 2			
REVISIONS 3			
REVISIONS 4			
REVISIONS 5			
REVISIONS 6			
REVISIONS 7			
REVISIONS 8			

SIGNATURE

P.E. NUMBER

DATE

SARAH MILDRED LONG BRIDGE
PISCATAQUA RIVER
KITTERY, ME PORTSMOUTH, NH

RAILROAD PROFILE IV

PREPARED BY: SEBAGO TECHNICS

SHEET NUMBER

R32

OF R93